Naval Facilities Engineering Command

NAVY CRANE CENTER

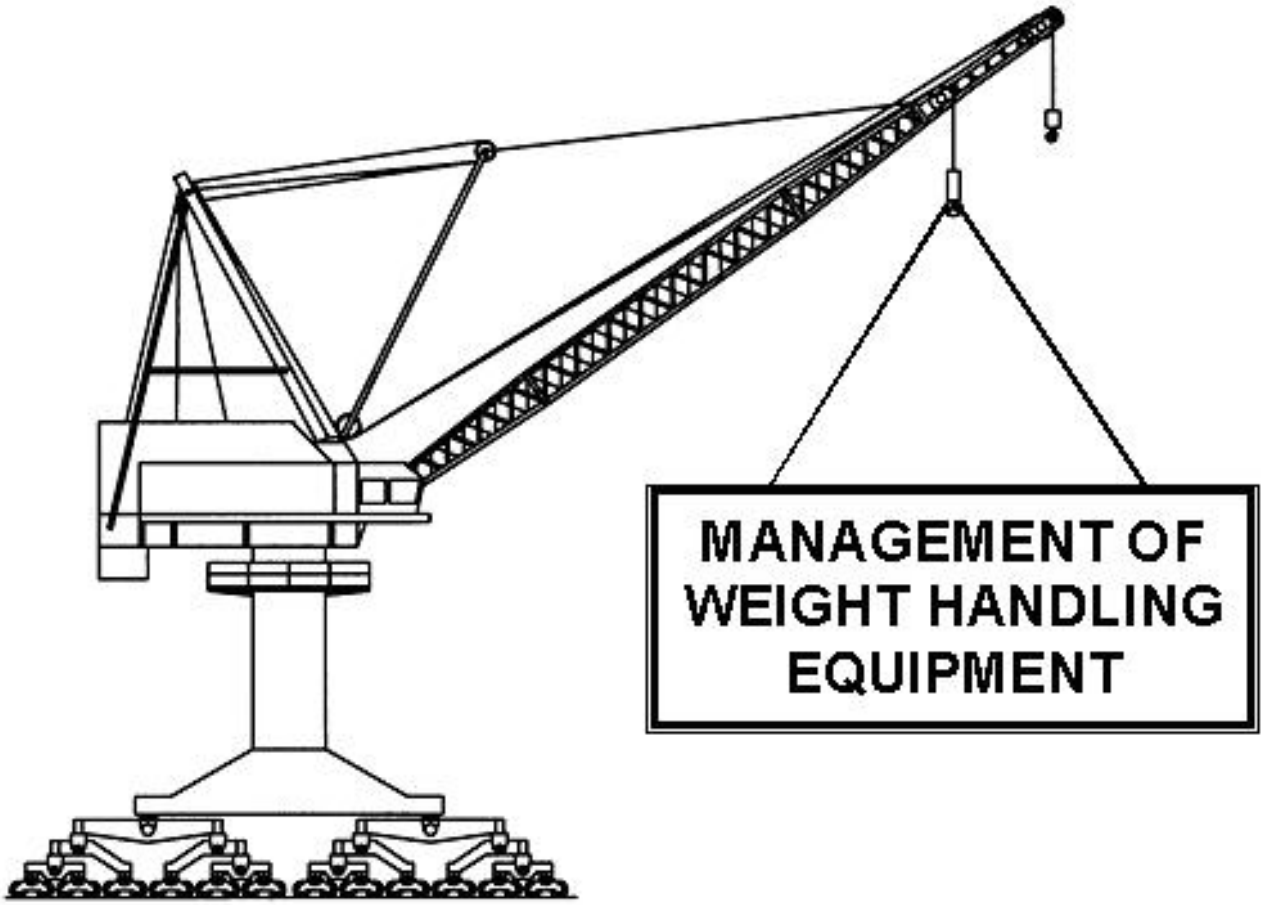

NAVFAC P-307

DECEMBER 2009

CHANGE 2 August 2011

NAVFAC P-307 can be downloaded from http://portal.navfac.navy.mil/ncc. To order printed copies, visit https://nll.ahf.nmci.navy.mil (PKI digital certificate required) or contact

Naval Inventory Control Point
ATTN: NAVICP 03334 Room 3200
700 Robbins Avenue
Philadelphia, PA 19111-5098
Phone: (215) 697-2626 DSN: 442-2626
Fax: (215) 697-5914

Stock Number - 0525-LP-109-7546

Due to increased DoD security requirements, a System Authorization Access Request (SAAR) must be submitted in order to gain access to the Naval Logistics Library. Contact the Naval Inventory Control Point helpdesk above for information on the SAAR process and forms.

FOREWORD

This publication provides the uniform Navy program for the management, maintenance, inspection, testing, certification, alteration, repair, and operation of weight handling equipment (WHE) at Navy shore installations and Navy owned WHE at non-Navy installations. Its purpose is to ensure the equipment is safe to operate; to ensure weight handling operations are conducted safely and efficiently; and to ensure optimum equipment service life.

SECNAVINST 11260.2 assigns overall Navy-wide management responsibility for shore based WHE to the Commander, Naval Facilities Engineering Command (COMNAVFACENGCOM) and authorizes the establishment of the Navy Crane Center. The Director of the Navy Crane Center has direct access to the Chief of Naval Operations and the Assistant Secretary of the Navy for Installations and Environment on matters involving the safe, reliable operation of Navy WHE. SECNAV 11260.2 requires commands to develop and maintain WHE programs in accordance with the policies and directives issued by COMNAVFACENGCOM.

Navy Crane Center responsibilities include: procuring designated types of WHE in accordance with NAVCRANECENINST 11450.1; establishing policy regarding design, maintenance, testing, certification, and operation of WHE; establishing training and qualification requirements for WHE personnel; auditing activities who own or operate WHE; validating activity certifications for cranes in special programs; certifying WHE and related equipment for which accredited certification is required by OSHA standards; tracking equipment deficiency trends and issuing crane safety advisories and deficiency notices; collecting data on crane accidents, investigating significant accidents, and disseminating lessons learned; reviewing and approving crane alterations; maintaining configuration control of designated WHE; and providing in-service engineering support.

This publication incorporates industry standards, where appropriate, as directed by SECNAV and COMNAVFACENGCOM policy. Deviation from these criteria shall not be made without prior approval of the Navy Crane Center.

This publication supersedes NAVFAC P-307 of June 2006. It has been reviewed and approved in accordance with SECNAVINST 5600.16. Changes are annotated on each applicable page and are explained in the Change Synopsis. Unless otherwise directed, Navy shore activities shall achieve full compliance with the changes identified within one year.

W.G. SHEAR JR.
Rear Admiral, CEC, U.S. Navy
Commander
Naval Facilities Engineering Command

ACKNOWLEDGMENTS

Permission to reprint specific portions of the following documents has been granted by the American Society of Mechanical Engineers.

ASME B30.2, Overhead and Gantry Cranes (Top Running Bridge, Single or Multiple Girder, Top Running Trolley Hoist)

ASME B30.4, Portal, Tower and Pillar Cranes

ASME B30.5, Mobile and Locomotive Cranes

ASME B30.6, Derricks

ASME B30.9, Slings

ASME B30.22, Articulating Boom Cranes

CHANGE RECORD

This page is provided for recording of future changes to this version of P-307.

Change No.	Date	Title or Brief Description	Entered By
1	3/31/2011	NDT Periodicity; Mobile Crane Test; Complex Lift Rules for Ordnance Handling; and OSHA Rules Update for Navy Cranes Used in Construction Changes.	Navy Crane Center
2	8/11/2011	Cranes Owned by Other Services and Operated at Navy Activities; New Crane Procurement and Overhaul; Other Policy Clarifications.	Navy Crane Center

CHANGE 2 August 2011

CHANGE SYNOPSIS

This change synopsis is provided to assist the user in determining the changes to the previous version of NAVFAC P-307. Changes in the text are indicated by change bars in the left and right margins. Page number only changes are not identified by change bars but are noted in the change synopsis.

Paragraph 1.1 Clarified that Navy activities on joint bases and other bases must follow P-307 regardless of who owns their WHE. Added references for acquisition and overhaul of WHE.

Page 1-2 Page number change only.

Paragraph 1.3.3 Clarified that SSP OD and NAVSEA ordnance handling equipment exempt from this publication applies to ordnance handling equipment (section 14 type equipment and not cranes). This is a clarification not a change.

Pages 1-4, 1-5, 1-6, and 1-7 Page number change only.

Paragraph 1.7.2.e Corrected previous typographical error; changed “or” to “of” in first sentence.

Pages 1-9 and 1-10 Page number change only.

Paragraph 1.7.3 Expanded paragraph outlining requirements for WHE operated by Navy personnel at Navy activities but not owned by the Navy. Clarified requirements for operation of cranes owned by other military services and agencies.

Paragraph 1.8 Clarified requirements for joint bases where Navy activities are the tenant and not the crane service provider. This clarification incorporates the requirements of expanded paragraph 1.7.3. Requirements for joint bases where Navy is the service provider remain the same.

Paragraph 1.9 Relocated and renumbered paragraph to clarify requirements for Navy personnel performing inspection, maintenance, testing, or certification of non-Navy owned and operated WHE.

Paragraphs 1.10, 1.11, 1.12, and 1.13, Paragraph number change only.

CHANGE SYNOPSIS

This change synopsis is provided to assist the user in determining the changes to the previous version of NAVFAC P-307. Changes in the text are indicated by change bars in the left and right margins. Page number only changes are not identified by change bars but are noted in the change synopsis.

Paragraph 1.4.k Added new OSHA definition of “construction” to special definitions.

Paragraph 1.7.1 Revised to reflect new test load for mobile cranes.

Page 1-7 Page number change only.

Paragraph 1.7.2.c Added requirement for operators of cranes used in construction.

Paragraph 1.7.2.g Updated OSHA references.

Paragraph 1.7.2.j Added signal person requirement for cranes used in construction.

Paragraph 1.7.2.1 Added requirement for tower cranes used in construction.

Page 1-11 Page number change only.

Page 1-12 Page number change only.

Page 1-13 Page number change only.

Page 1-14 Page number change only.

Paragraph 3.3 Revised for clarity. Supplemental Certification Sheet now required for mobile cranes.

Paragraph 3.5.3.h New paragraph cross referencing new additional requirements for assembly/disassembly of cranes.

Paragraph 3.5.3.1.1 Revised for clarity.

Paragraph 3.5.3.1.2 Revised for clarity.

Paragraph 3.5.7 Revised to reflect new test load for mobile cranes.

Paragraph 3.7.1 Revised to reflect new test load for mobile cranes.

Paragraph 3.7.1.1 Clarified that water bag type test weights cannot be used on category 4 cranes.

Paragraph 3.8.2 Revised to reflect new test load for mobile cranes.

Paragraph 3.8.3 Added requirement for barges used to support mobile cranes used in construction.

Page 3-12 Page number change only.

Figure 3-1 Revised to reflect new mobile crane test.

Figure 3-2 Revised to reflect new mobile crane test.

Table 5-1

Item (2) Additional requirements for cranes used in construction.

Item (6) Revised for clarity.

Item (33) New item to keep track of hook material type for new NDT requirements.

Paragraph 6.1.2 New requirements for contractors operating Navy cranes used in construction.

Paragraph 6.1.3 Paragraph number change only.

Page 6-2 Page number change only.

Paragraph 9.1 New requirement of a check each shift for cranes used in construction.

Paragraph 9.1.2.1.5 Additional requirements for pre-use checks for floating cranes used in construction.

Paragraph 9.2 New requirement of a check each shift for cranes used in construction.

Page 9-8 Page number change only.

Page 9-9 Page number change only.

Paragraph 10.2.2.3.1 New requirements for operational safety devices, general safety devices, and operational aids for cranes used in construction.

Paragraph 10.3 Revised for clarity. Clarified requirement for activity to develop operating procedures if not provided by OEM.

Paragraph 10.4.a Clarified relationship between NAVSEA OP-5 and NAVFAC P-307 with respect to complex lifts and lifts of ordnance.

Paragraph 10.4.1, and Deleted Note Clarified exemption to complex lift rule.

Page 10-6 Page number change only.

Paragraph 10.4.1.2.c Clarified that lifts of ordnance using tilt fixtures are complex lifts.

Paragraph 10.5 Clarified type and readout of load indicating device required.

Paragraph 10.5.2 Outlined ground conditions required for crane operations or assembly/disassembly.

Paragraph 10.6 Outlined requirements for voice communication devices and directions.

Paragraph 10.7 Outlined personnel allowed to be in fall zone of the load.

Paragraph 10.7.1 New requirement for work area control.

Paragraph 10.7.2 Paragraph number change.

Paragraph 10.7.3 Additional requirements for assembly/disassembly of cranes.

Paragraph 10.7.3.1 Addressing of potential hazards by supervisor or RIC during assembly/disassembly.

Paragraph 10.7.3.2 Outrigger/Stabilizer requirements during assembly/disassembly.

Paragraph 10.7.3.3 Post-assembly inspection requirements.

Paragraph 10.7.3.4 Special requirements for lattice boom assembly/disassembly.

Paragraph 10.7.3.5 Assembly/disassembly near overhead power lines.

Paragraph 10.8.b Updated OSHA reference.

Paragraph 10.8.c Updated OSHA requirements.

Paragraph 10.8.2 Updated OSHA requirements.

Paragraph 10.8.2.1 Updated OSHA requirements.

Paragraph 10.8.2.2 Updated OSHA requirements.

Paragraph 10.8.2.3 Updated OSHA requirements.

Paragraph 10.11.1 Updated OSHA requirements.

Paragraph 10.11.1.1 Minimum clearance is now 20 feet for voltage less than 350 kV and 50 feet if over 350kV. Work zone definition required.

Paragraph 10.11.1.2 Planning meeting and designated spotter detailed requirements.

Paragraph 10.11.1.3 Detailed additional requirements if operator cannot see elevated warning line.

Paragraph 10.11.1.4 Requirements for operation below a power line.

Paragraph 10.11.1.5 Operations near communications towers.

Paragraph 10.11.1.6 Traveling below a power line.

Page 10-21 Page number change only.

Page 10-22 Page number change only.

Page 10-23 Page number change only.

Page10-24 Page number change only.

Page 10-25 Page number change only.

Page 10-26 Page number change only.

Figure 10-3 Updated minimum required clearances.

Appendix E

Paragraph 1.1 Changed nominal test load. Clarified which cranes test load applies to.

Paragraph 1.4 Required disassembly of hooks to perform NDT.

Paragraph 1.4.1 Updated reference.

Paragraph 1.4.3 and 1.4.3.1 New special disassembly and visual inspection requirements for certain hooks.

Paragraph 1.4.4 Revised hook NDT requirements.

Paragraph 1.4.4.1 Clarified applicability of NDT inside small holes. Updated requirements to match revised NDT requirements.

Paragraph 1.4.5 Revised vendor requirements.

Paragraph 1.4.6 Revised hook identification requirements.

Paragraph 1.5.4 Revised NDT requirement.

Page E-6 Page number change only.

Page E-7 Page number change only.

Page E-8 Page number change only.

Page E-9 Page number change only.

Page E-10 Page number change only.

Page E-11 Page number change only.

Page E-12 Page number change only.

Page E-13 Page number change only.

Page E-14 Page number change only.

Page E-15 Page number change only.

Page E-16 Page number change only.

Paragraph 5 Clarification of which tests apply to which cranes and introductory statement.

Paragraph 5.1 New nominal test load for mobile cranes of 105 percent of rated capacity.

Paragraph 5.2 Updated to reflect load-moment test in lieu of stability test.

Paragraph 5.3 Revised for clarity.

Paragraph 5.4, including all subparagraphs Completely revised test for telescoping boom cranes, including latching boom cranes.

Paragraph 5.5, including subparagraphs Completely revised test for lattice boom cranes.

Paragraph 5.6 Paragraph number change only.

Paragraph 5.7 Revised test to include new reference tests.

Paragraph 5.8 Revised to incorporate new reference paragraphs.

Paragraph 5.8.1 Paragraph number change only.

Paragraph 5.8.1.a Paragraph number change only.

Paragraph 5.8.1.d notes Paragraph number changes only.

Paragraph 5.8.2 Paragraph number change only.

Paragraph 5.8.3 Paragraph number change only.

Paragraph 5.8.4 Paragraph number change only.

Paragraph 5.8.4.1 Revised to incorporate new reference paragraphs.

Paragraph 5.9 Paragraph number change only.

Page E-32 Page number change only.

Page E-33 Page number change only.

Page E-34 Page number change only.

Page E-35 Page number change only.

Page E-36 Page number change only.

Page E-37 Page number change only.

Paragraph 8 Clarification of applicability to rubber-tired gantry cranes.

Paragraph 8.1 Change in test load to 105 percent.

Page E-39 Page number change only.

Page E-40 Page number change only

Appendix N

Paragraph 1.5.i New requirement for construction signal person training.

Paragraph 1.7 Note, c, d, e, and f New requirements for construction signal person training and qualification.

Page N-5 Page number change only.

Appendix P

P-2, Contractor Crane Or Rigging Operation Checklist Item 27 Updated OSHA reference.

P-2, Contractor Crane Or Rigging Operation Checklist Renumbered list of items.

Appendix Q

References 39, 40, 41 Renumbered after deleting SAE J122.

(INTENTIONALLY LEFT BLANK)

TABLE OF CONTENTS

Foreword		i
Acknowledgments		ii
Change Record		iii
Change Synopsis		v
SECTIONS		
1	General Overview	1-1
2	Maintenance	2-1
3	Certification	3-1
4	Crane Alterations	4-1
5	Equipment History File	5-1
6	Operator Licensing Program	6-1
7	Operator Qualification and Testing	7-1
8	Licensing Procedures and Documentation	8-1
9	Operator Checks	9-1
10	Operation Safety	10-1
11	Additional Requirements	11-1
12	Investigation and Reporting of Crane and Rigging Gear Accidents	12-1
13	Training and Qualification	13-1
14	Rigging Gear and Miscellaneous Equipment	14-1
APPENDICES		
A	Glossary	A-1
B	Types of Weight Handling Equipment	B-1
C	Maintenance Inspection Specification and Record for Category 1 Cranes	C-1
D	Maintenance Inspection Specification and Record for Category 2 and 3 Cranes	D-1
E	Crane Test Procedures	E-1
F	Examples of Load Bearing Parts, Load Controlling Parts, and Operational Safety Devices	F-1
G	Basic Questions for Category 1 and 4 Crane Operators Written Test	G-1
H	Basic Questions for Category 2 and Cab Operated Category 3 Crane Operators Written Test	H-1
I	Basic Questions for Mobile Boat Hoist and Rubber-Tired Gantry Crane Operators Written Test	I-1
J	Basic Performance Test for Weight-Handling Equipment Operator License, Category 1 and 4 Cranes	J-1
K	Basic Performance Test for Weight Handling Equipment Operator License, Category 2 and Cab Operated Category 3 Cranes	K-1
L	Basic Performance Test for Weight-Handling Equipment Operator License, Mobile Boat Hoists and Rubber-Tired Gantry Cranes	L-1
M	Procedures for Third Party Certification by the Navy Crane Center	M-1
N	Personnel Qualifications	N-1
O	Navy Crane Center Policy and Guidance for Crane Alteration Requests	O-1
P	Contractor Crane Requirements	P-1
Q	References	Q-1
R	Related Documents	R-1

TABLE OF CONTENTS

Index		Index-1
FIGURES		
1-1	Request for Clarification, Deviation, or Revision	1-12
2-1	Weight Handling Equipment Deficiency Report	2-6
3-1	Certification of Load Test and Condition Inspection	3-13
3-2	Certification of Load Test and Condition Inspection (Supplement for Mobile Cranes)	3-14
3-3	Crane Condition Inspection Record	3-15
4-1	Crane Alteration Request	4-8
4-2	Mandatory Alteration	4-11
8-1	Application for Crane Operator License	8-5
8-2	Crane Operator License	8-7
8-3	Crane Operator License Record	8-8
9-1	Crane Operator's Daily Checklist	9-8
10-1	Standard Hand Signals for Controlling Crane Operations	10-14
10-2	Standard Hand Signals for Controlling Overhead and Gantry Cranes	10-17
10-3	Danger Zone for Cranes and Lifted Loads Operating Near Electrical Transmission Lines	10-18
11-1	Dead Ending Rope in a Socket	11-5
12-1	Crane and Rigging Gear Accident Report	12-4
12-2	Crane and Rigging Gear Near Miss Report	12-6
14-1	Choker Hitch Configurations	14-11
M-1	Certificate of Unit Test and/or Examination of Crane, Derrick, or Other Material Handling Device	M-3
M-2	Notice to Owner of Deficiencies Found on Certification Survey	M-4
P-1	Certificate of Compliance	P-1
P-2	Contractor Crane Operation Checklist	P-2
TABLES		
5-1	Equipment History File	5-1
11-1	Load Ratings for Various Types of Mountings	11-2
13-1	Required Courses for Crane Personnel	13-4
14-1	Test Load Percentages for Initial and Periodic Load Tests, Periodic Load Test Frequencies, and Inspection Frequencies	14-6
14-2	Minimum Allowable Thickness at Any Point on the Chain Sling Link	14-7
14-3	Efficiency Factors for Various Wire Rope Slings	14-10
14-4	Rated Loads for Slings in a Choker Hitch	14-10
14-5	Eye Bolt Loading for Shoulder Eye Bolts	14-19

SECTION 1
GENERAL OVERVIEW

1.1 Introduction. This publication provides requirements for the maintenance, inspection, test, certification, repair, alteration, operation, and/or use of weight handling equipment (WHE) owned by the Navy and/or under the technical cognizance of the Naval Facilities Engineering Command (NAVFAC). Activities covered include Navy shore activities, the Naval Construction Force (NCF), Naval Special Operating Units (SOU), and the Naval Construction Training Center (NCTC). Also included are Navy fleet activities and detachments that operate shore based WHE along with Navy activities on joint bases and bases of other military services and agencies. These criteria are the minimum requirements for all applicable equipment. This publication meets or exceeds all applicable OSHA requirements for maintenance, inspection, testing, certification, repair, alteration, and operation of equipment covered herein. Acquisition of WHE and overhaul of existing WHE shall follow policy set forth in NAVCRANECENINST 11450.1. This instruction is available on the Navy Crane Center's web site, https://portal.navfac.navy.mil/ncc.

1.1.1 Exceptions. Units of the NCF and SOU are exempt from compliance with those portions of this publication that would preclude the execution of their wartime tasking in a strictly military unique operation. This includes Elevated Causeway "Modular" (ELCAS "M"), Elevated Causeway "Navy Lighterage" (ELCAS "NL"), and contingency embarking operations and exercises. Commanders of these units shall make every effort to ensure these inherently dangerous operations are conducted in the safest possible manner. Ample training and standard operation procedures shall be established and reviewed annually.

1.2 Purpose. The purposes of this publication are:

a. To maintain the level of safety and reliability built into each unit of applicable equipment by the original equipment manufacturer (OEM);

b. To ensure optimum service life;

c. To provide training and qualification standards for all personnel involved with maintenance, inspection, test, certification, engineering, rigging and operation of WHE;

d. To ensure the safe lifting and controlling capability of WHE and promote safe operating practices through the engineering, inspection, test, certification, qualification, operation, and rigging requirements prescribed herein.

1.3 Applicable Equipment

1.3.1 Sections 1 through 12. Sections 1 through 12 apply to the following types of equipment. Included are barge mounted cranes (category 1 through 4) at shore activities.

Category 1 cranes

Portal cranes
Hammerhead cranes
Locomotive cranes
Derricks
Floating cranes (YD)
Tower cranes
Container cranes
Mobile cranes (except those indicated as category 4) including truck, cruiser, crawler, warehouse/industrial cranes, and cranes used for dragline, pile driving, clamshell, magnet, and bucket work
Aircraft crash cranes
Mobile boat hoists including self-propelled and towed types
Rubber-tired gantry cranes

Category 2 and 3 cranes (Cranes with certified capacities of 20,000 pounds or greater are category 2. Cranes with certified capacities less than 20,000 pounds are category 3.)

Overhead traveling cranes (including runway track and hanger supports for underhung cranes)
Gantry cranes (rail mounted)
Wall cranes
Jib cranes
Davits
Pillar cranes
Pillar jib cranes
Monorails and associated hoists (including track, switches, and hanger supports)
Fixed overhead hoists, including fixed manual and powered hoists (portable manual and powered hoists are defined in paragraph 1.3.2 and covered in section 14 unless the activity chooses to treat them as category 2 or 3 cranes)
Portable A-frames and portable gantries with permanently installed hoists
Pedestal mounted commercial boom assemblies (fixed length and telescoping types) attached to stake trucks, trailers, flatbeds, or railcars, or stationary mounted to piers, etc., with certified capacities less than 2,000 pounds.

Category 4 cranes

Commercial truck mounted cranes
Articulating boom cranes, including ammunition handling truck/cranes with equipment category code 0704
Pedestal mounted commercial boom assemblies (fixed length and telescoping types) attached to stake trucks, trailers, flatbeds, or railcars, or stationary mounted to piers, etc., with certified capacities of 2,000 pounds and greater.

Note: Commercial truck mounted cranes (described by ASME B30.5) and articulating boom cranes (described by ASME B30.22) of all capacities are

category 4 cranes and require a licensed operator even if the cranes are down rated for administrative purposes.

Sections 1 through 12 also apply to cranes installed ashore for training on shipboard operations unless such equipment is managed under an alternate Navy standard.

1.3.2 Section 14. Section 14 applies to the following equipment used in weight handling operations:

Rigging gear (slings, shackles, eye bolts, swivel hoist rings, links, rings, turnbuckles, insulated links, etc.)
Crane structures
Container spreaders
Personnel platforms
Portable manual and powered hoists. These are manual and powered hoists that are mounted by means of an upper hook (the source of power, air, electric, or manual, is irrelevant). The activity may designate this equipment as category 2 or 3 cranes as applicable.
Portable load indicators (dynamometers, load cells, crane scales, etc.)
Below the hook lifting devices as identified in ASME B30.20
Portable A-frames, portable floor cranes, and portable gantries. Portable A-frames and portable gantries with permanently installed hoists are category 2 or 3 cranes.
Cranes and hoists procured with, integral to, and used solely in support of larger machine systems (milling machines, press brakes, shore power booms, etc.).

Unless noted, the requirements of sections 2 through 11 do not apply to this equipment.

1.3.3 Non-Applicable Equipment. This publication does not apply to WHE installed on naval vessels, including cranes on floating dry docks. Requirements for shipboard WHE are covered in applicable NAVSEA technical publications. Equipment with category codes 0723, 0725, and 0735 are covered by NAVFAC P-300, however accidents occurring while using the equipment for lift hook work, as defined in section 12, shall be reported to the Navy Crane Center. Also excluded are personnel lifting equipment covered by NAVFAC P-300; vertical transportation equipment (stacker cranes, conveyors, automobile lifts, etc.) covered by NAVFAC MO-118; capstans (follow MIL-STD-1625); base-mounted drum hoists and winches used for line handling and other horizontal movement of loads; material handling equipment covered by applicable Naval Supply Systems Command criteria (except industrial and warehouse cranes, which are covered by this publication); ground support equipment covered by applicable Naval Air Systems Command criteria; ordnance handling equipment covered by Strategic Systems Program Ordnance Data (OD) criteria (section 14 type equipment only); and NAVSEA approved ordnance handling equipment (section 14 type equipment only). For cranes used at shore activities to train personnel on identical cranes installed shipboard, the applicable shipboard crane maintenance, inspection, operation, and certification program (e.g., NAVAIR, NAVSEA, etc) may be used in lieu of this publication. Ground level crane rails and runway rails, along with associated supports and foundations, for top running bridge cranes, gantry cranes, and wall cranes are covered by NAVFAC Instruction 11230.1.

1.4 Special Definitions. A thorough understanding of the following definitions is essential to the use of this publication. Additional terms that are used in reference to WHE are included in appendix A.

a. Load Bearing Parts. Those parts of WHE that support the load and upon failure could cause dropping, uncontrolled shifting, or uncontrolled movement of the load.

b. Load Controlling Parts. Those parts of WHE that position, restrain, or control the movement of the load (e.g., rotate and travel brakes, clutches) a malfunction of which could cause dropping, uncontrolled shifting, or uncontrolled movement of the load. Crane mounted diesel engines, generators, electrical power distribution systems, and electrical control circuits, associated with the movement of the load, shall be treated as load controlling parts except as noted.

Note: Backup components to primary load bearing and load controlling parts, such as secondary brakes, shall also be considered as load bearing or load controlling parts.

c. Safety Devices

(1) Operational Safety Devices. Safety devices that affect the safe load lifting and handling capability of the equipment, such as interlocks, limit switches, load/load moment and overload indicators with shutdown capability, anti-two-block limit switches with warning capability, emergency stop switches, radius indicating devices, and locking devices.

(2) General Safety Devices. Safety devices, such as bells, horns, warning lights, and bumpers, that provide protection for operation and maintenance personnel and equipment on, or in the operating path of, cranes.

Note: See appendix F for additional examples of load bearing and load controlling parts and operational safety devices.

d. Major Deficiency. A deficiency of a load bearing or load controlling part or operational safety device that hinders the safe operation or reduces the load bearing or load controlling capability of the equipment or component.

e. Alteration. An alteration constitutes any change in the OEM's WHE design configuration. This includes:

Replacement of parts and components with parts or components not identical with original (i.e., changes in material, dimensions, or design configuration), except as noted in section 4.
Addition of parts or components not previously a part of the equipment.
Removal of components that were previously a part of the equipment.
Rearrangement of parts or components.
Alteration of existing parts and materials.

f. Certifying Official. The individual(s), designated by the activity commanding officer, responsible for ensuring the activity's cranes are inspected and tested in accordance with the requirements herein, and that the cranes are safe to use for its intended purpose.

g. Third Party Certification. Certification of floating cranes used in shipbuilding, ship repair, or shipbreaking operations and all types of cranes and certain related gear used in cargo transfer by an OSHA approved certification agency. This certification is in addition to the certification requirements of section 3.

h. Cargo. Any materials or equipment intended for transport to other ships or shore activities.

i. Cargo Transfer. The loading, unloading, moving, or handling of cargo into, in, on, or out of any vessel.

j. Ship's Stores. Materials and equipment intended for the use and consumption by a ship in carrying out its mission.

k. Construction. Work activities that are construction, alteration, or repair as defined by OSHA under 29 CFR 1926. This does not include work covered under the general industry standard, 29 CFR 1910, shipyard industry standard, 29 CFR 1915, marine terminal industry standard 29 CFR 1917, or longshoring industry standard 29 CFR 1918. For further clarification, consult the local activity safety office.

1.5 Qualifications of Personnel. Personnel involved in the maintenance, alteration, repair, inspection, testing, and operation of WHE, shall be trained and qualified to perform their assigned duties. All personnel operating Navy-owned WHE shall meet the requirements of this publication. Specific requirements for crane operator qualification and licensing are addressed in sections 6, 7, and 8. For other personnel involved in the WHE program, see section 13 for training and/or qualification requirements.

1.6 Third Party Certification of Cranes, Derricks, and Other Devices used in Cargo Transfer and Floating Cranes and Floating Derricks (Including Barge-Mounted Mobile Cranes) used in Shipbuilding, Ship Repair, and Shipbreaking. Per OSHA regulations, cranes, derricks, and certain other devices (see paragraph 1.6.2) used in cargo transfer and floating cranes and floating derricks used in shipbuilding, ship repair, and shipbreaking shall be certified by an OSHA recognized certification agency. The Navy Crane Center is recognized by OSHA as a third party certifier of Navy owned cranes per the requirements of this publication. Third party certification requirements apply to cranes and other devices at Navy activities in the United States and its territories.

Notes: Non-floating cranes, derricks, and other devices used in shipbuilding, ship repair, and shipbreaking do not require third party certification. Lifting of components, materials, parts, etc. associated with shipbuilding, ship repair, or shipbreaking is not cargo transfer. Loading of ship's stores does not require third party certification. Lifting of hoses and ship's brows does not require third party certification.

In accordance with 29 CFR 1918.1, effective 21 January 1998, cargo transfer performed with the use of shore-based cranes and derricks is governed by 29 CFR 1917. Mobile cranes placed aboard vessels for cargo transfer will continue to be governed by 29 CFR 1918. The following is Navy policy for implementation of the certification requirements of these standards.

1.6.1 Cranes and Derricks. For Navy owned cranes and derricks, third party certification shall be performed by the Navy Crane Center. This third party certification is in addition to certification by the designated certifying official as addressed in section 3. For Navy owned cranes and derricks operated or maintained by contract (e.g., base operating services contracts), certifying officials shall ensure contracting officers include the requirement for Navy Crane Center third party certification of applicable cranes in contracts. See appendix M for certification procedures.

For all other cranes and derricks (including rented, leased, and contractor owned and operated cranes and derricks) used in the above noted operations, third party certification shall be by an OSHA accredited certification agency in accordance with OSHA regulations. A list of currently accredited agencies may be obtained from the area OSHA office.

Note: Cranes and derricks used in cargo transfer shall be fitted with a load indicating (or alternate) device meeting OSHA requirements. The load indicating device may be integral with the crane or may be hung from the hook provided a readout is located in the crane cab. A load indicating device is not required when the crane is used to handle cargo, that is known (i.e., units hoisted are marked) to weigh less than 11,200 pounds and when 11,200 pounds is less than the rated capacity of the crane at the maximum radius possible under the conditions of use at the time. Additionally, portal and bridge cranes used in cargo transfer shall be fitted with a wind indicating device meeting OSHA requirements.

1.6.2 Container Spreaders and Below the Hook Lifting Devices. (Examples of below the hook lifting devices requiring third party certification include spreader beams, lifting devices for unique cargo, and bar pallet bridles that have some components that are not off-the-shelf items.)

Container spreaders and below the hook lifting devices (i.e., does not include common rigging gear) with rated loads greater than 10,000 pounds purchased or manufactured after 21 January 1998 shall have a third party certification by an OSHA recognized agency prior to use. This is a one-time third party certification. For Navy owned devices used in cargo transfer, the certification shall be by the Navy Crane Center and shall include an inspection and load test at the test load percentages noted in table 14-1. Third party certifications shall be retained in the equipment's history file for the life of the gear. For contractor owned devices used in cargo transfer, the requirements of 29 CFR 1917.50(c) apply. Third party certification is not required for devices purchased or manufactured prior to 21 January 1998, or for devices with rated capacities of 10,000 pounds or less.

1.7 Non-Navy Owned Cranes and Rigging Equipment at Naval Activities.

1.7.1 Rented or Leased Cranes Operated by Navy or Base Operating Service (BOS) Contractors and Cranes and Rigging Equipment Owned and Operated by (BOS) Contractors. Cranes shall be inspected, load tested, and certified to the requirements of section 3 prior to use (except for Appendix E hook NDT requirements). For cranes that cannot be load tested to the specified overload tests of this publication due to OEM restrictions or designs that prevent periodic overload tests, the cranes shall be downrated to 90 percent of the OEM's rated capacity (76 percent for non-mobile cranes) and tested to the requirements of this publication. For long term leases (over 4 months) and for BOS contractor owned cranes, the maintenance and inspection requirements of section 2, and Appendix E, hook NDT requirements shall also apply. Additionally, an equipment history file, section 5, containing those documents required by sections 2 and 3 and their applicable appendices shall be maintained on each rented or leased crane. These history files shall be retained for one year after the end of the lease (seven years if the crane is involved in a crane or rigging accident). These requirements shall be included in applicable contracts.

Crane operators shall be licensed in accordance with the requirements of sections 6 through 8 (or equivalent for BOS contractor personnel). Crane operations shall be in accordance with sections 9 through 12. Rigging equipment and usage practices shall be in accordance with section 14.

1.7.2 Contractor Operated Cranes (and Multi-Purpose Machines, Material Handling Equipment (Forklifts), and Construction Equipment When Used as Cranes to Lift Suspended Loads) and Rigging Equipment in Weight Handling Operations. In addition to cranes rented or leased for operation by an activity, other non-Navy owned cranes, multi-purpose machines, material handling equipment (forklifts), and construction equipment are used on Navy property to lift suspended loads. Rigging equipment may be used with these machines or by itself in weight handling operations. These cranes and equipment can be from a variety of sources and are generally incidental to construction contracts, ship repair contracts, demolition contracts, maintenance and other service contracts, deliveries of supplies and equipment, etc. Numerous organizations, including tenant activities, ships, supply departments, ROICCs, etc., have contracting authority and very often the need for cranes is not anticipated when contract documents are written. The following requirements apply to any contracted work utilizing cranes (and multi-purpose machines, material handling equipment, construction equipment used to lift loads suspended by rigging gear) and to all rigging equipment used in weight handling operations at a naval activity. These requirements do not apply to shipboard cranes or rigging equipment. Navy activity (i.e., host activity) commanding officers shall promulgate the following minimum requirements to tenants and contracting officers for inclusion in contracts, statements of work, purchase orders, etc. (These requirements do not apply to cranes that enter the activity but are not used for lifting, or other machines not used to lift loads suspended by rigging equipment.)

a. Require the contractor to comply with specific activity regulations pertaining to crane safety and operation (including allowable access routes and ground loading limitations), and to notify the contracting officer, in advance, of any cranes entering

the activity or of any multi-purpose machines, material handling equipment, or construction equipment that may be used in a crane-like application to lift suspended loads. Require the contractor to comply with applicable ANSI or ASME standards (e.g., ASME B30.5 for mobile cranes, ASME B30.22 for articulating boom cranes, ASME B30.3 for construction tower cranes, and ASME B30.8 for floating cranes, ASME B30.9 for slings, ASME B30.20 for below the hook lifting devices, and ASME B30.26 for rigging hardware, ANSI/ITSDF B56.6 for rough terrain forklifts). For cranes, machines and rigging equipment at naval activities in foreign countries, the cranes, machines and rigging equipment shall comply with the appropriate host country safety standards. For barge-mounted mobile cranes, require a third party certification from an OSHA accredited organization (or a third party certification from a state accredited organization for those states with OSHA approved state plans), a load indicating device, a wind indicating device, and a marine type list and trim indicator readable in one-half degree increments. Third party certification is not required for barge-mounted mobile cranes at naval activities in foreign countries.

b. Require a certificate of compliance from the contractor (appendix P, figure P-1) that the crane (or other machine if used to lift suspended loads) and the rigging equipment meet applicable OSHA and ANSI/ASME regulations (with the contractor citing which OSHA and ANSI/ASME regulations are applicable, e.g., cranes/multi-purpose machines used in cargo transfer shall comply with 29 CFR 1917; cranes/multi-purpose machines used in construction, demolition, or maintenance shall comply with 29 CFR 1926; cranes/multi-purpose machines used in shipbuilding**,** ship repair, or shipbreaking shall comply with 29 CFR 1915; slings shall comply with ASME B30.9, rigging hardware shall comply with ASME B30.26). For cranes (or other machines used to lift suspended loads) and rigging equipment at naval activities in foreign countries, the contractor shall certify that the crane (or other machine) and the rigging equipment conform to the appropriate host country safety standards. The contractor shall also certify that all of its crane (or other machine) operators working on the naval activity have been trained not to bypass safety devices (e.g., anti-two block devices) during lifting operations. Require that the certifications be posted on the crane.

c. For mobile and commercial truck mounted cranes with OEM rated capacities of greater than 2000 pounds, require that the crane operator be designated as qualified by a source that qualifies crane operators (i.e., a union, a government agency, or an organization that tests and qualifies crane operators). Proof of current qualification shall be provided. Operators of cranes used in construction at activities under US jurisdiction shall follow the qualification and certification requirements of 29 CFR 1926.1427.

d. Require the contractor to certify (appendix P, figure P-1) that the operator is qualified and trained for the operation of the crane or machine to be used.

e. For multi-purpose machines, material handling equipment, and construction equipment used to lift loads suspended by rigging equipment, require proof of authorization from the machine OEM that the machine is capable of making lifts of loads suspended by rigging equipment. Require the contractor to demonstrate that

the equipment is properly configured to make such lifts and is equipped with a load chart.

f. Require that all hooks used on cranes, hoists, other machines, and rigging gear shall have self-closing latches or the throat opening shall be "moused" (secured with wire, rope, heavy tape, etc.) or otherwise secured to prevent the attached item from coming free of the hook under a slack condition. The following exceptions apply and shall be approved by the contractor's technical organization: items where the hook throat is fully obstructed and not available for manual securing and lifts where securing the hook throat increases the danger to personnel such as forge shop, dip tank, or underwater work.

g. Require a critical lift plan for each of the following lifts: lifts over 75 percent of the capacity of the crane, hoist, or other machine (lifts over 50 percent of the capacity of a barge mounted mobile crane's hoists) at any radius of lift; lifts involving more than one crane, hoist, or other machine; lifts of personnel (lifts of personnel suspended by rigging equipment from multi-purpose machines, material handling equipment, or construction equipment shall not be permitted); lifts made in the vicinity of overhead power lines; erection of cranes; and lifts involving non-routine rigging or operation, sensitive equipment, or unusual safety risks. The plan shall include the following as applicable:

(1) The size and weight of the load to be lifted, including crane (or other machine) and rigging equipment that add to the weight. The OEM's maximum load capacities for the entire range of the lift shall also be provided.

(2) The lift geometry, including the crane (or other machine) position, boom length and angle, height of lift, and radius for the entire range of the lift. Applies to both single and multiple crane/machine lifts.

(3) A rigging plan, showing the lift points, rigging equipment, and rigging procedures.

(4) The environmental conditions under which lift operations are to be stopped.

(5) For lifts of personnel, the plan shall demonstrate compliance with the requirements of 29 CFR 1926.1431.

(6) For barge mounted mobile cranes, barge stability calculations identifying crane placement/footprint; barge list and trim based on anticipated loading; and load charts based on calculated list and trim specific to the barge the crane is mounted on. The amount of list and trim shall be within the crane manufacturer's requirements.

(7) For lifts in the vicinity of overhead power lines (i.e., if any part of the crane or other machine, including the fully extended boom of a telescoping boom crane or machine, or the load could approach the distances noted in figure 10-3 during a proposed operation), the plan shall demonstrate compliance to 29 CFR 1926.1408-1411.

h. Require the contractor to notify the contracting officer as soon as practical, but not later than four hours, after any WHE accident. (See definition in section 12.) Require the contractor to secure the accident site and protect evidence until released by the contracting officer. Require the contractor to conduct an accident investigation to establish the root cause(s) of any WHE accident. Crane operations shall not proceed until cause is determined and corrective actions have been implemented to the satisfaction of the contracting officer.

i. Require the contractor to provide the contracting officer within 30 days of any accident a Crane and Rigging Gear Accident Report using the form provided in section 12 consisting of a summary of circumstances, an explanation of causes(s), photographs (if available), and corrective actions taken. These notifications and reporting requirements are in addition to those promulgated by OPNAVINST 5100.23 and related command instructions.

j. Require the contractor to certify that signal persons used in construction work are qualified in accordance with 29 CFR 1926.1428.

The host activity shall ensure that contracts contain the above requirements, concur with the contracting officer's oversight plan (paragraph 1.7.2.2), ensure that the oversight plan is being carried out, and provide oversight of contractor accident investigations and corrective actions.

1.7.2.1 Additional Requirements For Tower Cranes. Contractor provided tower cranes used in construction must meet the additional requirements of CFR 1926.1435. The following additional documentation is required for contractor provided tower cranes (those cranes defined by ASME B30.3).

a. Foundation design and requirements.
b. Installation instructions.
c. Assembly and disassembly instructions including climbing/jumping instructions if applicable.
d. Operating manual, limitations, and precautions.
e. Periodic inspection and maintenance requirements.

1.7.2.2 Contracting Officer Responsibilities

a. The contracting officer shall include the minimum requirements of paragraph 1.7.2 and 1.7.2.1 for contractor cranes in contracts, ensure compliance with contract requirements, provide oversight of contractor crane and rigging operations, and provide oversight of contractor accident investigations and corrective actions. The degree of oversight shall be based upon the risk to Government personnel and property. Appendix P, figure P-2, provides a checklist that shall be used during oversight of contractor crane and rigging operations. The host activity shall concur with the oversight plan. Copies of appendix P, figure P-2, shall be kept on file for one year.

b. The contracting officer shall notify the host activity of any WHE accident upon

notification by the contractor. Additionally, the contracting officer shall notify the Navy Crane Center of an accident involving a fatality, in-patient hospitalization, overturned crane, collapsed boom, or any other major damage to the crane or adjacent property as soon as possible, preferably within 24 hours of notification by the contractor. For all other accidents, notify the Navy Crane Center as soon as practical but no later than three working days after the accident.

c. The contracting officer shall provide the Navy Crane Center and host activity a copy of every accident report, regardless of severity, upon receipt from the

contractor. These requirements are in addition to any notification and reporting requirements promulgated in OPNAVINST 5100.23 and command instructions. When the contracting office is not in the local area, the contracting officer shall designate a local representative to ensure compliance with the above noted requirements.

1.7.3 WHE Owned by Other Military Services and Other Government Agencies. Where Navy personnel operate WHE owned by other services or agencies at Navy activities, including Navy activities on bases of other military services and agencies, the WHE shall be maintained, inspected, tested, and certified in accordance with this publication. The training, licensing, and operational requirements of this publication apply.

Where WHE owned and operated by other military services and agencies is used in support of Navy operations, the activity commanding officer shall establish and promulgate a policy to ensure the safe operation of the equipment. The policy shall include, as a minimum, the requirements addressed in paragraph 1.7.2 for contractor operated cranes.

1.8. WHE at Joint Bases. WHE operated by Navy personnel at Navy activities on joint bases shall be maintained, inspected, tested, and certified in accordance with this publication. WHE operated by another military service that have been turned over to the Navy, or where the Navy performs inspection, maintenance, testing and certification, shall be inspected, maintained, tested, and certified in accordance with this publication at their next regularly scheduled inspection/maintenance period, but no later than one year from turnover or full operational capability (FOC). Personnel of other military services who operate, or perform rigging on, WHE maintained and certified by the Navy shall be trained and qualified in accordance with, and shall follow the operational requirements of, this publication. This paragraph does not apply to Army or Air Force mobile tactical WHE.

Where WHE owned and operated by other military services and agencies as the supporting component is used in support of Navy operations, the activity commanding officer of the supported component shall establish and promulgate a policy to ensure the safe operation of the equipment. The policy shall include, as a minimum, the requirements addressed in paragraph 1.7.2 for contractor operated cranes.

1.9 Non-Navy Owned and Operated WHE Inspected, Maintained, Tested, or Certified by Navy Personnel. Where Navy personnel inspect, maintain, test, or certify, non-Navy

owned and operated WHE, they shall follow the requirements of sections 1, 2, 3, 5, 11, 12, 13, 14, and the applicable appendices as a minimum.

1.10 Record Formats. Sample formats shown throughout this publication show the minimum information required to be maintained for record purposes. Activity generated forms may be substituted, provided they include the information required. Activities may delete items from the sample forms provided they are not applicable to the subject equipment. Local reproduction of the forms is authorized.

1.11 Audits and Self-Assessments. As directed by SECNAVINST 11260.2, audits of weight handling programs at Navy shore activities are periodically conducted by the Navy Crane Center in accordance with Navy Crane Center Instruction 11200.33. Activities shall perform a self-assessment and provide the results of the assessment to the Navy Crane Center approximately 30 days prior to the audit. Commands shall coordinate responses and corrective actions resulting from audits with their field activities.

1.12 Implementing Procedures. Activities shall develop standard written procedures for managing their weight handling program that implement the applicable requirements of this publication.

1.13 Request for Clarification, Deviation, or Revision. Requests for clarification, deviation, or revision to this manual shall be documented using a "Request for Clarification, Deviation, or Revision," (RCDR) figure 1-1. Appropriate references, enclosures, background, and reason for request shall be provided. This form may also be used to request clarifications, deviations, or revisions to Crane Safety Advisories, Equipment Deficiency Memoranda, and other directives issued by Navy Crane Center. RCDRs issued prior to the publication date of this revision of NAVFAC P-307 that provide clarifications or general interpretations shall be considered cancelled except for those that remain on Navy Crane Center's web site (https://portal.navfac.navy.mil/ncc). Previous RCDRs issued for one-time deviations or specific equipment remain in effect. Where appropriate, previous RCDRs have been incorporated into this document. RCDRs posted on Navy Crane Center's web site are applicable to all activities.

REQUEST FOR CLARIFICATION, DEVIATION, OR REVISION						
CHECK APPROPRIATE BOX		CLARIFICATION		DEVIATION		REVISION

ACTIVITY	ACTIVITY REQUEST NUMBER

WHE NUMBER	MANUFACTURER	SPS CRANE Yes _____ No_____
SUBJECT		

PREPARED BY	PHONE	FAX	DATE
	E-MAIL		
APPROVED BY	PHONE	FAX	DATE
	E-MAIL		
CONTRACTING OFFICER'S REPRESENTATIVE (IF PREPARED AND APPROVED BY CONTRACTOR)	PHONE	FAX	DATE
	E-MAIL		

REFERENCE(S)
ENCLOSURE(S)
PURPOSE
BACKGROUND
DISCUSSION
REQUEST

NAVY CRANE CENTER RESPONSE
NAVY CRANE CENTER CONTROL NUMBER

PREPARED BY	PHONE	FAX	DATE
APPROVED BY	PHONE DSN	FAX	DATE

FIGURE 1-1 (1 of 2)

REQUEST FOR CLARIFICATION, DEVIATION, OR REVISION INSTRUCTIONS

This form is designed for fax transmission without a cover page or by e-mail and, with enclosures and signatures, shall be the official document. Electronic submission will be accepted without signatures but the names of the preparer and approver shall be filled in. The e-mail address is m_nfsh_ncc_rcdr@navy.mil. The fax number is (757) 396-1772.

1. Clarification, Deviation, or Revision: Check appropriate block.

2. Activity: Enter the Standard Navy Distribution List (SNDL) plain language address (PLA) and unit identification code (UIC) for your activity.

3. Activity Request Number: Enter the request number from your activity in the following format: UIC-FY-000 i.e., your unit identification code, a dash, the current fiscal year, a dash, and the number of the request from your activity in sequence (use four digits).

4. WHE Number: Self-Explanatory, otherwise mark "N/A" if not WHE specific.

5. Manufacturer: Self-Explanatory, otherwise mark "N/A" if not WHE specific.

6. SPS Crane: SPS as defined by NAVSEA 0989-030-7000. Otherwise mark "N/A" if not WHE specific.

7. Subject: Enter the paragraph or other part of the manual addressed.

8. Prepared by: Self-explanatory.

9. Approved by: Self-explanatory.

10. Contracting Officer's Representative: If the request was prepared and approved by a contractor, indicate concurrence by the contracting officer's representative.

11. Reference(s): Enter the applicable references.

12. Enclosure(s): List the applicable enclosures.

13. Purpose: State the purpose of the request in one or two short sentences.

14. Background: State the background or reason that prompted the request.

15. Discussion: State the rationale behind the request.

16. Request: State the specific request.

17. Navy Crane Center Response, etc.: Reserved for Navy Crane Center use.

FIGURE 1-1 (2 of 2)

SECTION 2
MAINTENANCE

2.1 Maintenance Inspections. Maintenance inspections shall be performed at the frequencies and in the detail specified in this section. Personnel performing maintenance inspections shall be trained and qualified as inspectors per section 13. In general, inspections shall consist of observing the functioning of the specified components and parts before, during, and after operation. Examination shall be by sight, sound, touch, and, as necessary, instrumentation, nondestructive testing, and disassembly.

Primary emphasis during inspections shall be given to ensuring maximum safety by maintaining all load bearing and load controlling parts and operational safety devices in a safe and sound working condition. The inspector shall determine whether a deficiency constitutes a major deficiency (i.e., a deficiency of a load bearing or load controlling part or operational safety device that hinders the safe operation or reduces the load bearing or load controlling capability of the equipment or component.). Inspectors shall not engage in calculated risks or depend on their judgment alone where there is a doubt in their mind regarding a questionable condition of such parts. Questionable conditions of load bearing and load controlling parts and operational safety devices shall be referred immediately to the activity engineering organization and, if necessary, to the certifying official for resolution. If there is no activity engineering organization, the inspection organization shall evaluate the deficiency and the certifying official shall approve the resolution.

Maintenance of the crane portion of floating cranes shall be in accordance with this publication. Maintenance of the barge shall be in accordance with OPNAVINST 4790.4 or the barge OEM's maintenance manuals and recommendations. Documentation of barge maintenance is required and shall be retained for a minimum of two years (current year plus previous year).

2.1.1 Deficiencies. Deficiencies include failure or malfunction of equipment, improper engineering, inspection, or maintenance procedures, and major or unsafe discrepancies between design drawings and equipment configuration. This does not include normal wear on the equipment. In those instances where a deficiency is detected that has applicability at other Navy activities, the Navy Crane Center shall be notified as soon as practical, but in no case later than five days of the discovery. A summary report of the deficiency, including corrective actions taken or recommended, shall be forwarded to the Navy Crane Center within 21 days. Figure 2-1 shall be used to report the deficiency to the Navy Crane Center. Deficiencies (and corrective actions) to load bearing and load controlling parts and operational safety devices shall be documented and filed in the equipment history file.

2.2 Inspection Specifications. Maintenance inspection specifications are identified in appendices C and D for crane categories 1, 2, and 3. (See section 1 for categories of cranes.) These prescribe the type of inspection (A, B, C, or annual), the components and parts to be inspected, and the inspection action. The extent of disassembly shall be as noted. Each activity shall develop Maintenance Inspection Specification and

Record forms in accordance with the sample formats shown in appendices C and D. For unique items not covered, additional inspection attributes shall be included. Inspection specifications for category 4 cranes shall be developed by the activity based on applicable portions of appendix C and as recommended by the OEM. The applicable annual maintenance inspection record shall be included with the certification form submitted to the certifying official.

2.2.1 Specification Data Sheets. Each activity shall augment the specifications noted above with specification data sheets. These shall contain all guidance and technical information needed by inspectors in checking for wear, adjustments, settings, and tolerances during inspections. This information shall be extracted from OEM's technical manuals, maintenance experience, and other authoritative technical sources. Measurement locations for verifying settings shall be clearly identified.

2.2.2 OEM's Supplemental Service Information. Manufacturers, particularly of mobile cranes, often issue information (e.g., "service bulletins") more current and supplemental to that in the maintenance manual furnished with a particular crane. Much of the information pertains to the maintenance of the crane. Activities shall contact the OEM or authorized distributor for supplemental service information applicable to their cranes, and, if practical, be added to the OEM’s distribution list for such information.

2.3 Inspection and Corrective Action. Maintenance Inspection Specification and Record forms shall be used to record conditions at each inspection and shall be filed in the equipment history file.

All work performed including work to disassemble and reassemble components including disassembly for inspections of appendices C and D, shall be documented on a shop repair order or other work document (this does not include removal and replacement of inspection covers). Work documents involving repair, replacement, disassembly, alteration, or adjustment to load bearing parts, load controlling parts, and operational safety devices shall be reviewed by the inspector or engineer prior to starting the work. Work documents shall clearly describe the work to be done, including replacement parts to be installed, in-process inspection requirements for those items where inspection is not practical after completion of work, and shall identify appropriate test requirements. When an alteration is invoked, the work document shall cite the applicable alteration number and the nature of the change. Components to be repaired or replaced shall be identified to specific subsystems (e.g., main hoist motor to gearbox coupling) or location (e.g., hydraulic return hose for left rear outrigger jack). Except for cranes undergoing annual inspection and load test, work documents shall indicate whether or not re-certification is required.

Before performing maintenance or repairs to cranes, the following precautions shall be taken as appropriate: (See section 11 for tagging and lockout requirements.)

a. The crane to be repaired shall be positioned in a location where it will minimize interference with other cranes and operations in the area, and enable safe access for personnel working on the crane.

b. All controllers shall be in the “off” position.

c. Stored energy shall be controlled in accordance with the activity's lockout/ tagout procedures.

d. Warning signs or barriers shall be placed to alert personnel in the area of maintenance work being performed.

e. Where other cranes are in operation on the same runway, rail stops or other suitable means shall be provided to prevent interference with the idle crane.

After adjustments and repairs are made, the crane shall not be returned to service until all guards have been reinstalled, safety devices reactivated, and maintenance equipment removed.

2.3.1 Replacement Parts. Replacement load bearing and load controlling parts and safety devices shall be identical to those of the original design. Where circumstances require substitution of either material or design configuration, such matters shall be referred to the activity engineering organization for resolution.

2.3.2 Inspection of Work. Adjustments, repairs, and replacements of load bearing or load controlling parts or operational safety devices shall be inspected (including in-process inspections where required). Inspection shall include an operational test where appropriate. The inspector shall sign the work document to affirm that the work has been satisfactorily performed.

2.3.3 Deferral of Work During Annual Inspections/Certifications. Major deficiencies shall be corrected prior to annual certification unless the specific system is not in service and/or will not be placed in service (e.g., a bridge crane with a main hoist and an auxiliary hoist and the auxiliary hoist will not be certified). If it is not practical to complete other work to load bearing and load controlling parts and operational safety devices, such work may be deferred upon approval by the certifying official. Technical justification for deferral shall be provided. Deferred work shall be completed prior to the next annual certification unless further deferral is approved by the certifying official (deferred work does not require completion prior to the next certification if the system will remain out of service).

2.4 Maintenance Inspection Types and Frequency. Routine inspections shall be scheduled and performed for the various categories of cranes (defined in section 1) as follows. (Annual maintenance inspections and Type "B" maintenance inspections shall be performed in conjunction with the annual certification.)

2.4.1 Category 1 and 4 Cranes. The activity has the option of basing maintenance inspections on engine operating hours (or electrically energized hours for cranes without a main engine) as recorded on the hour meter on the main engine or main power source, or time intervals in calendar months (the scheduling basis may vary among cranes of the same type). The schedule shall establish either one or the other of these criteria (not whichever comes later). The scheduling basis (hour meter or calendar

month) shall be annotated in the equipment history file for the crane. A type "B" inspection shall be accomplished before the option to change is exercised.

2.4.1.1 Type Designation and Frequency

a. Type "A" Inspection (Appendix C). Calendar month basis - each 4 calendar months (plus 10 days) after certification. Hour meter basis - each 500 engine operating hours (plus 50 operating hours).

b. Type "B" Inspection (Appendix C). Calendar month basis - at every third type “A” inspection. Hour meter basis - each 2,000 engine operating hours (plus 200 operating hours), except that a type "B" inspection shall be performed annually as a minimum.

c. Type "C" Inspection (Appendix C). Calendar month basis - at every third type “B” inspection. Hour meter basis - each 8,000 engine operating hours (plus 800 operating hours), except that a type "C" inspection shall be performed every sixth annual certification as a minimum.

Note: A type "B" inspection shall also include all items designated under type "A" inspection. A type "C" inspection shall also include all items designated under type "A" and "B" inspections.

2.4.2 Category 2 Cranes and Category 3 Cranes. An annual inspection of items specified in the Annual Maintenance Inspection Specification and Record (appendix D).

2.5 Lubrication and Servicing. In addition to the inspection specifications prescribed in paragraph 2.2, each activity shall develop local instructions, and schedule and perform lubrication and servicing. Activity and Navy experience and crane usage may be used as a basis for modifying OEM recommended programs. Modification of OEM recommended programs shall be approved by the activity engineering organization. Where the Navy’s 3M program (OPNAVINST 4790.4) is utilized for shore-based cranes, the program shall incorporate all OEM requirements into the specific crane’s maintenance requirements cards.

2.5.1 Lubrication. Lubrication instructions shall be developed using OEM manuals and instructions as a guide when available. Particular attention shall be given to the amount of lubrication to be added at a given interval and ensuring lubricant distribution, especially in areas subject to small rocker motion (i.e., gudgeon or horizontal equalizer pins) or larger diameter bearings (i.e., slewing ring bearings). Over-lubrication is often destructive and shall be avoided. New equipment, even though presumably lubricated by the OEM, shall be checked for sufficient lubricant before being placed in service. Lubrication points on new or repaired equipment shall be checked to verify lubricant acceptance and proper assembly. Lubrication instructions shall minimize the number of different lubricants employed. Maximum utilization of existing lubricant inventories shall be considered. Consideration shall be given to periodically cycling all moving parts on those cranes that are idle for long periods of time between use to prevent blown seals and seized or corroded components.

2.5.2 Servicing. Servicing specifications shall be developed using OEM manuals and instructions for all mechanical and electrical equipment requiring periodic adjustments, tune ups, repairs, or alignments, such as brakes, clutches, engines, electrical and electronic control systems and individual devices, and similar systems and components. Where OEM manuals and instructions are not available or are silent with respect to requirements and standards to be used, national industrial standards and consensus standards shall serve as minimum requirements.

2.5.3 Documentation. Lubrication and servicing actions shall be recorded on an SRO, Operator's Daily Checklist, or other document as appropriate. The documentation recording these actions shall be maintained in the equipment history file.

2.5.4 Inspection Action. Inspectors shall perform a detailed review of maintenance records and equipment during prescribed inspections to ensure that lubrication and servicing are being properly performed as specified.

2.6 Deferral of Maintenance Inspections, Lubrication, or Servicing. When an emergent or other contingent condition exists precluding the timely completion of a prescribed maintenance inspection or lubrication and servicing schedule, the certifying official may authorize a deferral of the prescribed maintenance inspection (or portion of the maintenance inspection), lubrication, or servicing . Technical justification for deferral shall be provided. Each deferral and justification shall be in writing and shall be filed in the equipment history file. If the crane certification is extended per paragraph 3.5.1, a written deferral of the maintenance inspection and/or lubrication and servicing schedules is not required. Deferred maintenance inspections, lubrication, or servicing shall be completed as soon as the emergent or contingent condition is resolved.

2.7 Procedures for Maintaining Microprocessor Controlled Crane Systems. Activities with microprocessor controlled crane systems that incorporate user programmable software and or firmware shall develop written procedures to manage their software and or firmware. These procedures shall address control of files, revision controls including naming/labeling of files, parameter listings, existing settings of programmable parameters, allowable crane design ranges of programmable parameters, procedures to upload/download files and/or change programmable parameters, and security procedures.

WEIGHT HANDLING EQUIPMENT DEFICIENCY REPORT

ACTIVITY:		**DEFICIENCY REPORT NUMBER:**	
SUBJECT:			
PREPARED BY:	**PHONE:**	**FAX or EMAIL:**	**DATE:**
APPROVED BY:	**PHONE:**	**FAX or EMAIL:**	**DATE:**
CRANE OR EQUIPMENT ID:	**MANUFACTURER/YEAR MANUFACTURED:**		**SPS CRANE Yes___No__**
MODEL/SERIAL NUMBER:		**CAPACITY/TYPE:**	
RESULTED IN ACCIDENT: ☐ **YES** ☐ **NO**	**TYPE OF ACCIDENT:**		

THIS REPORT GENERATED DUE TO:

- ☐ **FAILURE/DEFICIENCY OF LOAD BEARING/LOAD CONTROLLING PART/OPERATIONAL SAFETY DEVICE/ DIESEL ENGINE – GENERATOR SET**
- ☐ **FAILURE/DEFICIENCY OF A SECTION 14 ITEM AFFECTING SAFETY**
- ☐ **DRAWING/DESIGN DISCREPANCY**
- ☐ **OTHER FAILURE/DEFICIENCY CONSIDERED SIGNIFICANT**

DESCRIPTION OF DEFICIENCY (INCLUDE MANUFACTURER'S PART NO., FEDERAL STOCK NO., ETC.):

PROBABLE CAUSE:

CORRECTIVE ACTION TAKEN/RECOMMENDATION:

FOR NAVY CRANE CENTER USE: NAVY CRANE CENTER Control Number: _____

☐ **CSA ISSUED** ☐ **RESPONSE TO ORIGINATOR (IF REQUESTED)** ☐ **NO ACTION REQUIRED**
☐ **EDM ISSUED** ☐ **MANDATORY CRANE ALT ISSUED**

REMARKS (EXPLANATION OF BOX CHECKED ABOVE):

FIGURE 2-1 (1 of 2)

WEIGHT HANDLING EQUIPMENT DEFICIENCY REPORT INSTRUCTIONS

This form is designed for fax transmission without a cover page or by e-mail and, with enclosures and signatures, shall be the official document. Electronic submission will be accepted without signatures but the names of the preparer and approver shall be filled in. The e-mail address is m_nfsh_ncc_whedr@navy.mil. The fax number is (757) 396-1772.

1. Activity: Enter the Standard Navy Distribution List (SNDL) plain language address (PLA) and unit identification code (UIC) for your activity.
2. Deficiency Report Number: Enter the deficiency report number from your activity in the following format: UIC-FY-000 i.e., your unit identification code, a dash, the current fiscal year, a dash, and the number of the deficiency report from your activity in sequence (use four digits).
3. Subject: Enter the equipment part/component as applicable.
4. Prepared by: Enter the name and code of the person preparing the report.
5. Phone: Enter the phone number (DSN and commercial) of the person preparing the report.
6. Fax: Enter the fax four-digit extension of the person preparing the report.
7. Date: Enter the date the report was prepared.
8. Approved by: Enter the name and code of the person approving the report.
9. Phone: Enter the phone number (DSN and commercial) of the person approving the report.
10. Fax: Enter the fax four-digit extension of the person approving the report.
11. Date: Enter the date the report was approved.
12. Crane or Equipment ID: Enter the crane or equipment identification number from your activity numbering system.
13. Manufacturer/Year Manufactured: Enter the crane or other equipment manufacturer and the year made.
14. SPS CRANE: SPS as defined by NAVSEA 0989-030-7000.
15. Model/Serial Number: Enter the model and serial number of the affected crane or other equipment.
16. Capacity/Type: Enter the capacity and type of crane or other equipment.
17. Resulted in Accident: Check appropriate box.
18. Type of Accident: List the type of accident if applicable (i.e., personal injury, load collision, crane collision, overload, two blocked, damaged load, derail, dropped load, damaged rigging gear, damaged crane, or other (be specific).
19. This Report Generated Due to: Check appropriate box.
20. Description of Deficiency: Describe the deficiency. Attach photographs or drawings as necessary to convey the condition.
21. Probable Cause: State the probable cause as concluded from your investigation if applicable.
22. Corrective Action Taken/Recommendation: State corrective action(s) taken and your recommendation for Navy Crane Center action.
23. For Navy Crane Center Use: Reserved for Navy Crane Center use.

FIGURE 2-1 (2 of 2)

(INTENTIONALLY LEFT BLANK)

SECTION 3
CERTIFICATION

3.1 Certification Program. The commanding officer is responsible for ensuring safety within the activity. He/She shall designate the certifying official(s) who shall ensure the activity's cranes are inspected, tested, and certified in accordance with this section. Certifications shall be based on the condition inspection and tests as prescribed herein. It is the purpose of the condition inspection to ensure that the overall structural, mechanical, and electrical components of the equipment have been maintained in a safe and serviceable condition and are functioning properly. It is the purpose of the load test to ensure by controlled operation with prescribed test loads that the equipment is capable of safely lifting and moving the rated load through all design motions. These inspections and tests shall be performed by technically competent inspection and test personnel under the direction of a designated test director. Upon successful completion of the condition inspection and tests, a Certification of Load Test and Condition Inspection shall be signed by the test director, inspection personnel, and the certifying official.

3.2 Designation of Certification Personnel. The certifying official(s), including alternates, shall be designated in writing by the commanding officer of the activity, or by written command or regional instruction. The certifying official may be designated by position/title in lieu of name and the designation is considered to remain in effect until cancelled/revised. The certifying official shall, in turn, designate in writing the authorized test directors and condition inspectors involved in the certification process. For activities that obtain weight handling services from other activities, they shall designate in writing the activity and services that are provided in lieu of the specific personnel.

3.3 Certification Action. The Certification of Load Test and Condition Inspection form shall be similar to that shown in figure 3-1. For mobile cranes, locomotive cranes, aircraft crash cranes, and category 4 cranes an attachment shall be provided similar to figure 3-2. A card or tag with the crane identification number, certified capacity, and the certification expiration date, shall be posted in a conspicuous location on or near the crane. The certification expiration date shall be one day prior to the anniversary date of the certification. The crane may remain in service on the expiration date. For example, if a category 1 crane is certified 30 June, the expiration date shall be 29 June of the following year. The date of the certifying official's signature is the official certification date, from which the certification expiration date is determined. The crane shall not be returned to service prior to obtaining the certifying official's signature except as provided in paragraph 3.5.4. The certifying official shall withhold certification pending the correction of all inspection deficiencies existing after the load test that, in his/her judgment, could cause unsafe conditions.

3.4 Certification Requirements. A crane shall not be used in service without a valid certification.

3.4.1 Annual Certification. The certification is valid for one year from the date of signature of the certifying official. The certification process shall include a condition

inspection and appropriate tests. For category 1 and 4 cranes, the annual tests shall include a load test. Category 2 and 3 cranes shall be inspected, operationally tested (without load), and certified annually however, a load test shall be performed at every fourth annual certification, as a minimum. The certification shall so indicate when a crane is in the quadrennial load test program. For floating cranes (including mobile cranes mounted on barges), as a condition for certification, the barge shall be determined fit for further service as evidenced by a current material inspection report and documentation of a current depot availability or an approved deferral of depot availability as required by OPNAVINST 4780.6.

3.4.2 Interim Recertification Requirements. (See paragraph 3.5.7 for interim recertification requirements after inadvertently exceeding the certified capacity during operation.)

3.4.2.1 When a Load Test is Required. When the adjustment, repair, disassembly, alteration, or replacement of a load bearing part, load controlling part, or operational safety device requires a load test for verification of satisfactory work performed, recertification is required. To determine if a load test is required, the component's impact on holding strength shall be assessed. If holding strength could be affected by the work performed (i.e., failure to make the proper adjustment, repair, etc., could result in dropping or uncontrolled lowering of the load), then a selective inspection, load test, and recertification shall be performed. This includes rotate and travel components when the rotate or travel function may operate on an inclined plane, such as the rotate function on floating and barge-mounted cranes, and a trolley on a luffing boom. When load tests are performed, they shall include applicable portions of both the static and dynamic tests of appendix E. The extent of inspection and testing may be limited, where practical, to those parts and components of systems affected, but shall fully ensure that the adjustment, repair, disassembly, replacement, or alteration has been performed correctly, and that the crane operates properly.

3.4.2.2 When a Load Test is Not Required. When the adjustment, repair, etc., of a load bearing or load controlling part or operational safety device does not require a load test for verification of satisfactory work, one of the following (at the activity's option) is required prior to returning the crane to service:

a. After all work, inspection, and operational testing required by section 2 are completed, the work document(s) shall be signed by the chief engineer or the certifying official. An interim recertification is not required.

b. A selective inspection, operational test, and recertification shall be performed. This is in addition to the inspection requirements of section 2.

3.4.2.2.1 Work Performed on Horizontal Movement Functions. Load testing is not required after work performed on rotate and travel brakes, friction clutches, and non-load bearing travel components where the load travels in a horizontal plane.

3.4.2.2.2 Adjustments to Return Hoist Brakes to Established Range/Tolerance. Load testing is not required after readjusting a brake's setting to within its established

range/tolerance when it is outside the established range/tolerance provided all of the following conditions are met:

a. The activity engineering organization has determined and documented the root cause(s) of the brakes going out of range/tolerance and corrective actions have been taken and documented. The brake and/or crane OEM(s) have been consulted as appropriate.

b. The brakes have been inspected and evaluated and no damage or deterioration is present other than worn brake linings/discs that are not less than minimum thickness.

c. No work or disassembly is performed on the brakes other than routine readjustments based on the brake and/or crane OEM and/or activity engineering procedures. These adjustments shall be detailed on a work document, witnessed and signed by an inspector, and reviewed by the chief engineer or certifying official.

d. No load bearing parts, such as brake linings/discs or torque springs have been replaced.

3.4.3 Recertification not Required. The requirements of paragraph 3.4.2 do not apply to the following:

a. Adjustments, repairs, etc., to travel brakes and travel components on portal cranes due to redundancy.

b. When any brake or friction clutch's setting is within established range/tolerance and is readjusted within this range/tolerance.

c. The following work on electrical circuits, diesel engines, and generators:

(1) Electrical Control and Power Distribution Circuits.

Replacing blown fuses and enclosed/module type plug-in relays with identical components and resetting tripped circuit breakers (provided that engineering has determined the cause of the failure; for activities without engineering services, follow the requirements of paragraph 3.4.2). For repetitive failures and failure trends, the chief engineer or certifying official shall concur with corrective actions by signing the work document.

Removing and reinstalling fuses for inspection.

Aligning electrical contacts (without disassembly).

Tightening electrical connections.

Repairing or replacing meters and gauges.

Repairing or replacing cooling fans.

Replacing indicator lights and fixtures.

Removal, installation, or relocation of "plug-in" controllers/components (such as a multi-location pendant controller or resolver) provided they were tested at the annual certification in all locations.

(2) Crane Mounted Diesel Engines and Generators.

Routine preventive maintenance.

Repair or replacement of the following:

Batteries and cables.

Gauges and indicators.

Exhaust system.

Starting and charging system.

Fluid hoses and connections.

Belts and filters.

The inspection and operational test requirements of section 2 apply to these actions.

3.5 Voiding of Certifications. All certifications are automatically void after one year; after exceeding the certified capacity during operation; or after an adjustment, repair, disassembly, replacement, or alteration of a load bearing or load controlling part or operational safety device which requires a load test for verification of satisfactory work (see exceptions below and paragraph 3.4.3). A deficiency, adjustment, alteration, etc., to one function (e.g., whip hoist) will not necessarily void the entire crane certification provided the affected function is prevented from operating. Exceeding the certified capacity in a load test of a sample crane during a Navy Crane Center WHE audit or during a third party certification will not void a current certification or validation.

3.5.1 Exception for Extension of Certification for Emergent Conditions. When an emergent or other contingent condition exists precluding the timely certification of a crane, the commanding officer of the activity using the crane, with concurrence by the certifying official, may approve a certification extension. The approval shall be in writing and does not require an additional deferral of a required maintenance inspection. The certification extension shall not exceed 45 calendar days from the annual certification expiration date. Authority to extend a certification shall not be delegated. Before extending the certification, the crane shall pass a complete condition inspection including functional testing through all motions at normal operating speed. Additionally, no-load testing of shaft failure detection systems and boom latching/pinning and multiple extend mode systems as applicable is required. The certification can be extended regardless of whether the existing certification has expired, provided all conditions of this paragraph have been met. Each authorization to extend a certification shall be filed in the crane's equipment history file.

Note: To support emergent work that requires a third party certification, the Navy Crane Center will issue a new third party certification based upon a satisfactory condition

inspection and an operational test with partial (e.g., 25 percent of capacity) load. This certification will be effective for the life of the activity's certification extension.

3.5.2 Exception for Controlled Disassembly and Re-assembly. Controlled disassembly and re-assembly of components for inspection will not void the certification under the following conditions:

a. A written procedure is employed, prepared by the activity and approved by the certifying official and the Navy Crane Center. The procedure, in addition to step by step disassembly and re-assembly instructions, mandates in-process inspections and inspection point sign-offs and appropriate test requirements. Any changes to the procedure other than minor editorial changes shall also be approved by the certifying official and Navy Crane Center. Minor editorial changes shall be forwarded to the Navy Crane Center for information.

b. Components shall be disassembled and reassembled involving only fasteners, such as pins, bolts, and cap screws. All parts of the component are visible for inspection personnel to insure re-assembly is proper.

c. All parts disassembled, including load bearing and load controlling fasteners, are reused. No parts are replaced, except for consumable items such as cotter pins, lock wires, non-load bearing and non-load controlling fasteners, and washers.

d. Inspection of the disassembled parts shall reveal they are still serviceable, i.e., they have experienced no detrimental deterioration.

Note: Controlled procedures, as detailed in this paragraph, are not required for the annual inspections of cranes addressed in paragraph 3.5.4.

3.5.3 Exception for Re-reeving of Mobile Cranes and Installation of Ancillary Equipment. Mobile cranes are often equipped with ancillary equipment (jib, boom inserts and extensions, swing-away jib boom, power pinned fly section, etc.) and can typically be re-reeved to several different configurations (different blocks, different parts of line, etc.). Some category 3 pedestal mounted boom assemblies and category 4 cranes have multiple hook connection points. Changing the OEM's ancillary equipment configuration or re-reeving the crane will not void the annual certification when the following conditions are met:

a. Prior to use, the OEM's ancillary equipment shall have been inspected and tested as part of the crane's annual certification. This applies to each annual certification thereafter.

b. The annual certification shall be valid.

c. A written procedure shall be developed by the activity to install and remove the ancillary equipment or to re-reeve the crane. This procedure shall be developed according to the OEM's instructions, this manual, and other applicable directives. The procedure shall define each configuration change, the exact sequencing for

the installation and removal, and the selective inspection and operational test required after each assembly and disassembly of the ancillary system. The activity procedure and any changes other than minor editorial changes shall be approved by the certifying official and the Navy Crane Center. There shall be sufficient sign-offs in the procedure to ensure critical evolutions are completed. The approved procedure shall be retained in the equipment history file and the crane operator's instructions. The procedure shall be used each time the OEM's ancillary equipment is changed out or the crane is re-reeved. Minor editorial changes shall be forwarded to the Navy Crane Center for information

d. All components (pins, headache ball, hook, etc.) shall be clearly marked to designate their specific location in this system. Their use shall be restricted to the specific mobile crane. Components may not be interchanged unless approved by the OEM.

e. See section 11 for restrictions on the use of wedge sockets for wire rope end connections.

f. For each use of the procedures, the completed procedure shall be filed in the equipment history file.

g. Removal or addition of ancillary equipment from/to the crane without a Navy Crane Center approved procedure is considered a crane alteration and shall be processed in accordance with Section 4.

h. See paragraph 10.7.3 for additional operational and rigging requirements during assembly and disassembly of cranes.

3.5.3.1 Exceptions to Paragraph 3.5.3

3.5.3.1.1 Exception for Removable Outrigger Pads, Counterweights, and Outrigger Extension Pins on Mobile Cranes. Outrigger pads, counterweights, and outrigger extension pins on mobile cranes which are designed to be removed for travel and counterweights that are removable to allow for different crane capacities may be removed and reinstalled without written procedures and without voiding the certification. Removable outrigger pads, counterweights, and extension pins shall be uniquely identified to a specific crane or group of cranes and their use shall be restricted to those cranes. OEM instructions shall be followed when removing or installing outrigger pads, counterweights, and outrigger extension pins. All outrigger pads, counterweights, and extension pins (if load-bearing) shall be load tested at the annual certification.

3.5.3.1.2 Boom Angle and Extension Pins on Category 3 Pedestal Mounted Commercial Boom Assemblies and Category 4 Cranes. Boom angle and extension pins on category 3 pedestal mounted commercial boom assemblies and category 4 cranes may be removed and reinstalled without written procedures and without voiding the certification. The pins shall be uniquely identified to a specific crane and location (boom angle or extension), load tested with that crane, and their use restricted to that

crane. OEM instructions shall be followed when removing or installing the boom angle and extension pins. All boom angle and extension pins shall be load tested at the annual (or quadrennial) load test.

3.5.3.1.3 Gantry Frame Extension Pins on Category 2 and 3 Gantry Cranes. Removable pins used to raise and lower category 2 and 3 gantry cranes may be removed and reinstalled without written procedures and without voiding the certification. The pins shall be uniquely identified to a specific crane (or be designed such that they cannot be separated from their gantry frame), load tested and certified with that crane, and their use restricted to that crane. OEM instructions shall be followed when removing or installing the extension pins. The crane shall be load tested during the certification load test at the highest elevation for which use is anticipated.

3.5.4 Exception for Continuance for Productive Service. The intent of this section is to optimize crane availability for productive service after completion of the pre-certification inspections and load test, provided no deficiencies that could cause an unsafe condition are found during inspections or load test. Crane availability is greatly enhanced when the current annual certification remains in effect. Continuance of the certification is achievable by scheduling the maintenance and condition inspections and tests for the ensuing certification sufficiently in advance of the expiration of the current certification. The following requirements shall apply:

a. The current certification will not be voided by the subsequent maintenance and condition inspections (including adjustments and disassembly of load bearing and load controlling parts) and load test.

b. No deficiencies that can cause an unsafe condition are found during the inspections or load (or operational) test.

c. The current certification is still valid.

d. When the test director has determined that the crane has successfully passed the inspections and load test, it may continue in productive service under the conditions of the current certification.

e. The new certification shall be signed by the certifying official within 10 calendar days of the date of the completion of the new load (or operational) test. If not, the current certification is void and the crane shall be removed from service.

It is acceptable to temporarily interrupt productive service to perform portions of the maintenance and condition inspection then return to productive service provided that disassembly of load bearing or load controlling parts has not occurred and no major deficiencies are found.

3.5.5 Exception for Recalibration of Load/Moment Indicating Devices, Overload Indicators, Radius Indicators, Boom Length Indicators, and Boom Angle Indicators. Recalibration of electronic load/moment indicating devices, overload indicators, load

shutdown devices, hydraulic load indication devices, radius indicators, boom length indicators, and boom angle indicators by comparing with certified test weights, measured distances, angles, etc., will not void the certification, and may be performed without Navy Crane Center approval provided the load does not exceed 110 percent of the crane's certified capacity.

3.5.6 Interim Recertification Requirements for Cranes in Relocatable Buildings or Cranes Being Relocated. Certified WHE installed in relocatable buildings shall be recertified after a relocation of the building and prior to use, as follows:

a. If the crane is installed and secured in the building during building relocation, it shall be condition inspected, operationally tested, and certified.

b. If the crane is removed from the crane rails and reinstalled, it shall be condition inspected, load tested, and certified, unless the removal and reinstallation of the crane does not require disassembly of load bearing components, in which case an operational test may be performed in lieu of a load test. This requirement also applies to cranes that are being relocated in non-relocatable buildings.

If a crane is removed for repair and/or recertification, or if an alternate crane is to be installed, an operational test may be performed after the crane is installed provided there is no disassembly of load bearing components after the crane is certified.

3.5.7 Loading in Excess of Certified Capacity. Except for load tests and planned evolutions during maintenance periods, a crane shall not be planned to be loaded in excess of its certified capacity without Navy Crane Center approval. Requests for loading in excess of certified capacity for production lifts shall verify that there are no other safer means available (including leased equipment) to make the lift.

If overloading occurs inadvertently and does not exceed 110 percent (105 percent for mobile cranes, locomotive cranes, aircraft crash cranes, mobile boat hoists, rubber-tired gantry cranes, and category 4 cranes) of the certified capacity (including appropriate allowance for impact, if any), the effects of the overloading shall be evaluated by the engineering organization and corrective action(s) taken as required. As a minimum, a condition inspection of the affected parts shall be accomplished and the crane shall be operationally tested and recertified. If an inadvertent overload exceeds 110 percent (105 percent for mobile cranes, locomotive cranes, aircraft crash cranes, mobile boat hoists, rubber-tired gantry cranes, and category 4 cranes) of the certified capacity, a load test is required (along with the condition inspection) for recertification. Where only distinct portions of the equipment are affected (e.g., overload of whip hoist), only those portions need to be inspected and tested.

3.6 Condition Inspection. A condition inspection shall be performed before, during, and after the load test. For cranes in the quadrennial load test program in a non-load test year, only the "before" portion of the Crane Condition Inspection Record (CCIR) shall be completed. In this case, the "during" and "after" columns would be marked "N/A". A CCIR

similar to that shown in figure 3-3 shall be used to record results of the inspection. The inspection shall, in general, be by sight, sound, and touch with the depth and detail limited to that necessary to verify the overall condition. It is not intended to be in the same detail as a maintenance inspection. Each item on the CCIR shall be marked as either satisfactory or unsatisfactory. Where an item or inspection is not applicable, the symbol "NA" shall be used or the appropriate block blanked out. A description of unsatisfactory conditions shall be noted in the "Remarks" portion of the form. The completed CCIR shall be included with the crane certification form submitted to the certifying official. Except for category 2 and 3 cranes, the condition inspection shall be a separate inspection from the maintenance inspection addressed in section 2. For category 2 and 3 cranes, if no major deficiencies are found in the maintenance inspection, and if no work is done between the maintenance inspection and the load test, the maintenance inspection may serve as the “before” portion of the condition inspection. Both inspection forms shall be fully completed.

In the event that major deficiencies are identified by these inspections, the deficiencies shall be corrected prior to starting or completing the load test. Corrective action shall be properly documented. If a major deficiency is found after the load test, it shall be corrected, and a selective load test shall be performed to test the component(s) corrected. When a selective load test is performed, a condition inspection shall be performed on all items in the Crane Condition Inspection Record that experienced greater than normal loading to ensure that the load test has not caused any damage. A record of this retest shall be recorded in the "Remarks" portion of the Crane Condition Inspection Record. Elements of the pre-use inspection and the no-load portions of the appendix E tests may be performed simultaneously with the "before" portion of the condition inspection.

For cranes idle for a period greater than six months, a condition inspection and operational test shall be performed prior to placing the crane in service; recertification is not required. The CCIR similar to that shown in figure 3-3 shall be used to record results of the inspection. (This does not apply to jib cranes, pillar cranes, pillar jib cranes, monorails, davits, or fixed overhead hoists.)

3.7. Load Testing. The load test shall be performed in accordance with the procedures set forth in appendix E and any special requirements specified for the particular crane by the OEM or the activity engineering organization. The actual test load(s), in pounds, and actual test load percentage together with a list of the applicable test paragraphs (including all applicable subparagraphs) of appendix E shall be entered on the Certification of Load Test and Condition Inspection. Elements of the pre-use inspection, "before" portion of the CCIR, and no-load portions of the appendix E tests may be performed simultaneously.

3.7.1 Test Loads. The nominal test load shall be 125 percent of the rated capacity (105 percent for mobile cranes, locomotive cranes, aircraft crash cranes, mobile boat hoists, rubber-tired gantry cranes, and category 4 cranes). The actual test load shall be within +5/-0 percent of the nominal test load. For mobile cranes, the actual test load shall be based on the combination of test weights, rigging, and specified crane component

weights (i.e., hooks, blocks, ancillary devices, etc., and for some cranes the hoist wire rope not accounted for in the load charts). Load testing with loads above the limits specified herein is not authorized. Follow OEM load chart instructions. For mobile boat hoists and category 4 cranes, refer to OEM criteria for component weight requirements and values. For other types of cranes, the actual test load shall be the weight of the load, including rigging gear, suspended from the hook. For cranes that cannot be load tested to the specified overload tests of this publication due to OEM restrictions or designs that prevent periodic overload tests, the cranes shall be downrated to 76 percent of the OEM's rated capacity (90 percent for mobile cranes, locomotive cranes, aircraft crash cranes, mobile boat hoists, rubber-tired gantry cranes, and category 4 cranes) and tested to the requirements of this publication. Document reduced capacity by crane alteration in accordance with section 4.

3.7.1.1 Test Weights. Testing of cranes shall be done with the use of test weights. The use of dynamometers in lieu of lifting test weights is not permitted. Test weights for crane tests (and for rigging gear tests where test weights are used) shall be marked with a unique identification number and the weight in pounds. The weight marked shall be the actual weight taken from the scale or other measuring device. Solid weights shall be measured using calibrated equipment traceable to the National Institute of Standards and Technology, with a minimum accuracy of +/- two percent (i.e., indicated weight shall be within +/- two percent of actual weight). Water bag type weights may be used, except for mobile crane and category 4 crane tests. Water bag type weights shall be used and stored in accordance with OEM recommendations. The metering device/gauge used to determine the amount of water in the bag shall be calibrated annually using equipment traceable to the National Institute of Standards and Technology and shall ensure that the weight has a minimum accuracy of +/- two percent. Alternatively, a load indicating device meeting the above calibration and accuracy requirements may be used in lieu of a metering device. A list of test weights, with identification numbers and weights, shall be retained. The list shall include the type and serial number (or other identifier) of the weighing device(s) used to weigh the test weights. Where a lifting attachment supports multiple test weights (e.g., stacked weights or multiple weights suspended from a padeye), the total capacity shall be marked on the attachment.

3.7.2 Hoist Roll Back. When cranes exhibit hoist roll back, as defined in appendix A, the using activity shall ensure:

a. That the roll back condition is determined to be an inherent condition of the crane. If not, appropriate corrective action shall be taken.

b. That the roll back characteristic does not preclude continued use of the equipment in the current application. Documentation of inherent rollback and continued operation determinations shall be included in the equipment's history file.

Note: Testing for this condition is not required for hoists equipped with mechanical load brakes.

3.7.2.1 Hoist Roll Back at the Rated Capacity or Less. For cranes where rollback occurs at or less than the rated capacity of the crane, the using activity shall ensure:

a. That the minimum load where roll back occurs be determined for each speed point. This is a one-time test. The loads where roll back occurs shall be clearly posted on the crane and recorded in the crane's equipment history file.

b. That crane rigging and operational personnel are trained specifically on the equipment characteristics.

c. That procedures are established for handling loads at or near roll back conditions that require special attention in handling or landing loads in close proximity.

3.8 Mobile Cranes Temporarily Mounted on Barges. Mobile cranes certified for use on shore may be mounted on barges after meeting the requirements detailed below.

3.8.1 Selecting and Downrating the Mobile Crane. The activity engineering organization shall select the appropriately sized mobile crane for the job. The OEM's load chart and certification based on load testing on shore are invalid when mounting mobile cranes on barges. Barge stability calculations shall be performed and reduced load charts, if required based on maximum list and trim noted below, shall be established by the activity engineering organization and approved by the certifying official. The activity shall determine if further downrating is necessary based on factors such as weight of the load, sail area of the load, underwater current, etc.

3.8.2 Load Testing. Prior to use, the crane shall be load tested on the barge (to verify list and trim) and recertified. Test loads shall be 105 (+5, -0) percent of the reduced load chart capacities. List and trim shall not exceed 3 degrees during the load test and shall be within the crane manufacturer's requirements. The load test need not be re-performed during the annual certification period if the crane is removed and subsequently replaced on the barge provided the crane/barge configuration remains the same and a controlled assembly procedure, similar to an ancillary equipment installation/removal procedure, is used for the removal/installation of the crane on the barge. The load testing on the barge shall be performed once yearly as a minimum.

3.8.3 Sizing and Analyzing the Barge Deck. The engineering organization shall conduct an analysis of the barge deck structure for the expected crane outrigger (or crawler) and tie-down loads. Except for crawler cranes without outriggers, the crane shall be equipped with and used on outriggers. Outriggers shall rest on wood blocking. The crane carrier frame shall be secured to the barge deck with tie-downs to resist lateral loads. Tie-down sizes shall be calculated by the activity engineering organization based on expected maximum lateral loads and shall have some slack when the crane is fully raised on outriggers. For mobile cranes temporarily mounted on barges used in construction, the activity shall ensure that the barge or pontoon has a subdivided hull with one or more longitudinal watertight bulkheads. The barge shall have access to void compartments to allow for inspection and pumping.

3.8.4 Posting of Load Charts. A load chart shall be posted in the operator's cab that reflects the capacities of the crane on the barge. The operational pitch and roll, and wind speed limitations, as noted below, shall also be posted.

3.8.5 List, Trim, and Wind Indicators. A marine type list and trim indicator, readable in one-half degree increments, shall be installed in the operator's cab. In addition, a wind indicating device shall be provided.

3.8.6 Third Party Certification Requirements. Mobile cranes mounted on barges for shipbuilding, ship repair, shipbreaking, or cargo transfer (at naval activities in the U. S. and its territories) also require a third party certification per appendix M by the Navy Crane Center. Recertification is not required when returning the crane to shore service at full load capacities.

3.8.7 Additional Operational Requirements. The crane shall conduct lifts in calm seas only. Operating pitch and roll of the barge shall not exceed three degrees. The crane shall not operate in excess of wind speeds permitted by the crane OEM for use on barges or, in the absence of OEM guidance, 15 knots.

CERTIFICATION OF LOAD TEST AND CONDITION INSPECTION

Activity			Building/Location	
Crane No.	Type	OEM's Rated Capacity Main _____ lbs. _____ feet Aux _____ lbs. _____ feet Whip _____ lbs. _____ feet		Certified Capacity (If different from OEM's rated capacity, explain in "Remarks") Main _____ lbs. _____ feet Aux _____ lbs. _____ feet Whip _____ lbs. _____ feet

☐ Annual Certification ☐ Quadrennial Load Test

☐ Interim Recertification (Reason_____)

Appendix "E" Applicable Crane Test Procedure Paragraphs
(Include applicable subparagraphs.)

Category 1 or 4 Cranes *					
Boom Length	Test Load	Minimum Radius		Load Moment or Maximum Radius	
Hoist	%	Pounds	Feet	Pounds	Feet
Main					
Aux					
Whip					
Other					

Hook Tram Measurements	Base Meas.	Before Test	After Test
Main Hook			
Aux Hook			
Whip Hook			
Other			

Category 2 Cranes					
Hoist	Test Load %	Pounds	Hook Tram Measurements		
			Base Meas.	Before Test	After Test
Main					
Aux					
Other					

Category 3 Cranes					
Hoist	Test Load %	Pounds	Hook Tram Measurements		
			Base Meas.	Before Test	After Test
Main					
Aux					
Other					

Annual Certifications Since Hook NDT

Certification

This is to certify that inspections and tests have been conducted in accordance with the procedures set forth in the current NAVFAC P-307. It is further certified that the crane identified above is satisfactory to lift its certified capacity.

Test Director (Signature)	Date
Inspector (Signature)	Date
Inspector (Signature)	Date
Certifying Official (Signature)	Date
Expiration Date	

Remarks

* For mobile cranes, list all test loads and configurations (e.g., over side/over rear, boom extended/retracted, lifts on tires, travelling, etc.).

FIGURE 3-1

CERTIFICATION OF LOAD TEST AND CONDITION INSPECTION (SUPPLEMENT FOR MOBILE CRANE TESTS)

Complete as applicable for the type of crane certified. Indicate "NA" for configurations that do not apply

Crane No.

Lattice Boom Crane			Telescoping Boom Crane			
Boom Length (Feet)						
On Outriggers	Test Load	Radius	On Outriggers	Test Load	Radius	Boom Length
Maximum Certified Capacity			Maximum Certified Capacity			
Load Moment			Load Moment			
Free-Fall Mode			Free-Fall Mode			
On Rubber (Stationary)	Test Load	Radius	On Rubber (Stationary)	Test Load	Radius	Boom Length
Maximum Certified Capacity			Maximum Certified Capacity			
On Tires or Crawler Tracks (Pick and Carry) (Describe configurations and list test loads/radii)			On Tires (Pick and Carry) (Describe configurations and list test loads/radii/boom length)			

Other Configurations, including ancillary equipment if applicable. (Describe and list test loads/radii)

FIGURE 3-2

CRANE CONDITION INSPECTION RECORD

Note: Inspect components that are reasonably accessible without disassembly.

Crane No.:	Type:	Location:	Operator's Name:	Operator's License No.
Purpose of Inspection:	Legend: B = Before A = After D = During		Date Started:	Date Completed:

Item No.	Item Description	B	D	A	Insp/ Init.
1	Inspect structural components for damaged or deteriorated members, and for evidence of loose and missing fasteners and cracked welds.				
2	Inspect wire rope for wear, broken wires, corrosion, kinks, damaged strands, crushed or flattened sections, condition of sockets, dead end connections, and for proper lubrication.				
3	Inspect hooks for cracks, sharp edges, gouges, distortion, and freedom of rotation.				
4	Inspect hoist brakes and clutches, and rotate brakes on floating cranes for condition, wear, proper adjustment and proper operation. Spot check horizontal movement brakes and clutches for condition, wear, proper adjustment and proper operation.				
5	Inspect controls and control components for condition and proper operation.				
6	Inspect motors for condition and proper operation.				
7	Inspect limit switches for condition and proper operation. (Hook lower limit switch inspections/verifications may be performed at the maintenance inspection in lieu of the CCIR. Annotate in Remarks block if performed at the maintenance inspection.)				
8	If load test is performed at certification, inspect load indicators, load warning devices, and load shutdown devices for condition and working accuracy as specified in appendix C or D as applicable. (This may be performed at the maintenance inspection in lieu of the CCIR. Mark N/A if performed at the maintenance inspection.)				
9	Inspect mechanical equipment (shafts, couplings, gearing, bearings, etc.) for condition and proper operation.				
10	Inspect sheaves for condition and evidence of loose bearings and misalignment.				
11	Inspect wheels, axles, and trolley rails (as applicable) for uneven wear, cracks, and for condition and evidence of loose bearings and misalignment.				
12	Inspect load chains and sprockets for condition and proper operation.				
13	Verify capacity chart or hook load rating data is in view of operator and/or rigging personnel.				

Figure 3-3 (1 OF 2)

Item No.	Item Description	B	D	A	Insp/ Init.
14	Inspect operator's cab for cleanliness and operation of equipment.				
15	Inspect machinery house for cleanliness, proper safety guards, warning signs, and storage of tools and equipment.				
16	Verify proper operation of indicators, indicator lights, gauges, and warning devices.				
17	Verify current inspection of fire protection equipment.				
18	Verify that pressure vessel inspection certificates are posted and current. (See UFC 3-430-07 or appropriate document for test procedures.)				
19	Inspect outriggers, pads, boxes, wedges, cylinder mountings and level indicators for condition and proper operation.				
20	Inspect tires, crawler tracks, travel, steering, braking, and locking devices for condition and proper operation. (Applies to mobile cranes, boat hoists, rubber-tired gantry cranes, and certain category 4 cranes.)				
21	Verify accuracy of radius and/or boom angle indicator as specified in appendix C.				
22	Inspect pawls, ratchets, and rotate locks for proper engagement and operation of interlocks.				
23	Inspect tanks, lines, valves, drains, filters, and other components of air systems for leakage and proper operation.				
24	Inspect reservoirs, pumps, motors, valves, lines, cylinders, and other components of hydraulic systems for leakage and proper operation.				
25	Inspect engines and engine-generator sets for condition and proper operation.				
26	Inspect counterweights and ballast for condition and evidence of loose and missing fasteners.				
27	Verify barge compartment (voids) cover bolts are installed.				
28	Verify accuracy of list and trim indicators against design data or previous test data.				
29	Inspect rotate path assembly and center pin steadiment/support assembly for condition and proper operation.				
30	Inspect slewing ring bearings for condition and proper operation.				
31	Inspect travel trucks, equalizers, and gudgeons for condition and proper operation.				

Remarks:

Inspector Signature/Date:	Test Director Signature/Date:

Figure 3-3 (2 of 2)

SECTION 4
ALTERATIONS

4.1 Crane Alteration Request Form. Alterations shall be documented using the Navy Crane Center "Crane Alteration Request" (CAR) form. (See figure 4-1.)

4.2 Navy Crane Center Approved Alterations. Except as noted, alterations to load bearing parts, load controlling parts, or operational safety devices (including these parts and devices on hoists, cranes, and cranes structures covered by section 14) shall be approved by the Navy Crane Center. For definitions of load bearing parts, load controlling parts, or operational safety devices, see section 1. Alteration requests shall be fully developed by the activity engineering organization. Where practicable, concurrence shall be obtained from the crane or component OEM. Requests for approval shall fully describe the proposed alteration and shall include, as appropriate, specifications, design computations, drawings, and bills of material. Alterations approved by the Navy Crane Center may be revised, for reasons such as machining details or other minor changes, with local engineering approval, by recording the change on shop work documents. Alterations conditionally approved by the Navy Crane Center need not be resubmitted for approval if the activity accepts and incorporates all Navy Crane Center comments. Acceptance and incorporation of the Navy Crane Center comments shall be documented on all shop work documents. See appendix O for additional guidance on crane alteration requests and Navy Crane Center review policy.

Note: The Navy Crane Center maintains records of all approved crane alterations. These can be made available to activities planning alterations.

4.2.1 Mandatory Crane Alterations. Alterations identified as mandatory are those that shall be accomplished on all cranes specified. They are classified as follows:

a. Mandatory-Now: Crane(s) shall be removed from service until alteration is completed.

b. Mandatory-Delayed: The time to accomplish will be specified, e.g., within 90 days. Until that time, the crane may remain in service.

c. Mandatory-When Needed: This type of alteration previously corrected a deficiency on a particular crane or component. The same alteration shall be made should a similar deficiency occur on an identical crane or component.

d. Mandatory-Site Specific: Approved as a unique alteration for an activity or a particular crane. These can be due to environmental concerns or specific working conditions.

Figure 4-2 will be used by the Navy Crane Center to issue mandatory alterations. Activities shall provide notification of completion of the alteration to the Navy Crane Center upon accomplishment by using figure 4-2. E-mail or facsimile transmission is acceptable.

4.2.2 Standing Crane Alterations. Standing alterations issued by the Navy Crane Center are broad in scope, voluntary, and pertain to all WHE where applicable. Examples are fastener substitutions, wire rope substitutions, and replacement of hydraulic hose assemblies. For a current list of standing alterations, see the Navy Crane Center web site (https://portal.navfac.navy.mil/ncc). Some standing alterations require that a local crane alteration be developed and filed in the history file for future reference; follow the instructions on the specific standing alteration.

4.2.3 Crane Modernization/Overhaul Contracts Administered by the Navy Crane Center. Additional crane alteration approval is not required when alterations are performed by contract and the Navy Crane Center is the cognizant technical authority. The Navy Crane Center approved contract specification and/or drawings serves as alteration approval.

4.3 Locally Approved Crane Alterations. Changes to WHE not involving load bearing parts, load controlling parts, or operational safety devices and not subject to further restrictions listed below, may be approved locally. Locally approved alterations shall be developed by the appropriate engineering organization, fully describing the proposed change, and shall be accompanied as necessary by specifications, design computations, drawings, and bills of material. Locally approved alterations may be in the form of shop work documents but shall have a Navy Crane Center “Crane Alteration Request” cover sheet. Locally approved alterations shall be forwarded to the Navy Crane Center for information within 14 days after approval. The Navy Crane Center will reclassify and return locally approved crane alteration requests that do not comply with the requirements of this paragraph. The returned request will identify additional documentation or action required. Alterations approved locally may be revised, for reasons such as machining details or other minor changes, with local engineering approval, by recording the change on shop work documents.

4.3.1 Alterations Based on Prior Navy Crane Center Approval. Alterations to load bearing parts, load controlling parts, and operational safety devices previously approved by the Navy Crane Center for a particular crane at an activity may be approved locally for the same alteration on identical cranes at the activity.

4.3.2 Minor Alterations Not Affecting Load Bearing, Load Controlling, or Operational Safety. Alterations to install items which are not load bearing, load controlling, or operational safety devices, but where those items are to be attached to load bearing or load controlling items, other than crane booms, may be approved locally. This includes attachment by means of welding per American Welding Society procedures or Navy equivalents or drilling of small holes for fasteners. These alterations shall not effectively reduce the strength or change the function of the load bearing or load controlling item.

4.4 Additional Requirements and Exemptions

4.4.1 Changes to OEM's Rated Capacity. A change to the OEM's published or posted rated capacity constitutes an alteration as follows:

4.4.1.1 Equipment Related Changes. A change to the OEM's rated capacity due to deterioration or deficiencies of load bearing parts, load controlling parts, or safety devices is prohibited. Down rating due to discovered errors in the original design will be considered by the Navy Crane Center on a case-by-case basis.

4.4.1.2 Environmental, Administrative, and Operational Related Changes. A reduction to the OEM's rated capacity and/or speeds (hoist, rotate, and/or travel speeds) based on adverse operating conditions, such as limits in foundations or supports, track or soil conditions, or operational hazards, such as mobile cranes on barges, may be locally approved. Also, administrative down rating for operational efficiency (e.g., the crane's full lifting capacity or speeds are not required) may be locally approved. Re-rating a crane, down rated per this paragraph, up to its OEM rated capacity may be locally approved; however the crane shall be load tested and certified at its re-rated capacity if the current certification was based on testing at its down rated capacity. If reducing speeds requires a change in component settings, see paragraph 4.4.4 for appropriate direction. If the crane is microprocessor controlled, see paragraph 4.4.5. If a wiring change or drawing change is required, then a crane alteration requiring Navy Crane Center approval is required. See appendix O for additional guidance.

4.4.2 Replacement parts. The following criteria are provided to determine if the use of a replacement part constitutes an alteration.

a. Interchangeability. Any replacement part identified by the OEM's part number to a single national stock number (NSN) in the Defense Logistics Information Service data base is approved as interchangeable with any other manufacturer's part number listed under the same NSN.

b. Industry Consensus Standard Equivalents. Replacement parts and hardware identified as industry consensus standard interchangeable equivalents shall be approved by the activity engineering organization. Examples are AISE brakes and mill motors, SAE grading of bolts, NEMA standard size contactors, AGMA standard geared couplings, and AFBMA standard size bearings. Examples of organizations with consensus standards are National Electrical Manufacturers' Association (NEMA), Association of Iron and Steel Engineers (AISE), Society of Automotive Engineers (SAE), Anti Friction Bearing Manufacturers' Association (AFBMA), American Gear Manufacturers' Association (AGMA), International Standards Organization (ISO), Industrial Fasteners Institute (IFI), and American National Standards Institute (ANSI). The activity shall ensure standard equivalent parts have the same or improved form/fit/function as the OEM parts including, but not limited to, sealing, mounting and lubrication. Bearing dynamic and static ratings may be less than OEM equipment as long as the static rating is above the minimum required for the application and is approved by the activity engineering organization.

c. Technical Bulletin. Navy Crane Center approval is not required when the crane or component OEM has issued a technical or parts bulletin or other official written notification approving the use of a specific superseding part or component in lieu of the original. The activity engineering organization shall approve the use of the superseding part. This exception does not apply to major components such as

hoists, winches, motors, gearboxes, electronic drives, and booms. Contact Navy Crane Center Code 03 for further guidance if necessary.

d. Approved Wire Rope End Connections. Navy Crane Center approval is not required when changing to an approved end connection as noted in section 11.

Note: Replacement parts described above do not constitute alterations. However, these changes shall be documented either in the equipment history file, on drawings, or in the crane technical manual.

e. Fabrication to Original Specifications. When the activity holds the original crane or component OEM drawing, specification, and bill of material, they may fabricate the part or have the part fabricated to these standards. This does not constitute an alteration.

f. OEM Changes. OEM changes to load bearing parts, load controlling parts, or operational safety devices require Navy Crane Center approval. OEM changes to other parts require local alteration approval. OEM changes are defined as changes made by the OEM or OEM authorized agent while under contract for repair, overhaul, or remanufacture of a crane or component.

4.4.3 Repairs. Restoring a crane component or assembly to its original or virtually original condition, dimension, or mechanical property by technically recognized and accepted procedures is a repair and not an alteration. Examples are:

a. Weld repairs to other than crane booms, when performed in accordance with American Welding Society procedures or Navy equivalents. Weld repairs to hooks are not permitted.

b. Electroplating for restoring surface finish and fit.

c. Refinishing of electrical contacts.

d. Substitution of Navy Crane Center approved modern materials for obsolete materials.

e. Substitution of Navy Crane Center approved bolts/nuts for rivets and bolts of equal size.

f. Minor changes that do not effectively reduce the strength or change the function of the part, such as:

(1) Machining or grinding to remove surface defects.

(2) Machining for oversize bushings.

(3) Drilling or cleaning up holes in load bearing or load controlling components, other than boom chord members.

(4) Removal of material for leveling of foundations.

(5) Minor repositioning of components for alignment.

g. Restoration of original interference or low clearance fits between cylindrical components (hubs and shafts) and key/keyseat assemblies using anaerobic compounds. These compounds are acceptable for restoring fits of torque transmitting assemblies only when the torque is transmitted by other means, such as a key.

h. Removing short lengths of wire rope to remove defects or change crossover points provided all other requirements regarding minimum dead wraps are met.

Note: For a list of currently approved substitute materials listed on Standing Crane Alterations, see the Navy Crane Center web site (https://portal.navfac.navy.mil/ncc).

4.4.4 Crane Component Setting Adjustments. Adjusting component settings within the crane OEM prescribed ranges/tolerances does not constitute an alteration. Adjustments using the OEM permitted replacement parts, such as stiffer brake springs, are a locally approvable alteration. Establishing brake setting ranges/tolerances outside of brake and/or crane OEM limits (or where the OEM does not provide a setting range/tolerance) is a locally approvable alteration provided the activity engineering organization directs the development of the new setting range/tolerance, and the component is load tested (or given an appropriate proof test as defined by the activity engineering organization), as necessary to verify the new setting range/tolerance. The activity engineering organization shall obtain concurrence from the crane OEM where practical. See appendix O for further examples.

4.4.5 Alterations to Microprocessor-Controlled Cranes. Changes to microprocessor controlled crane systems that incorporate user programmable software and/or firmware shall comply with the following requirements:

a. Changing the crane OEM's settings that establish new high or low limits for programmable parameters is a crane alteration requiring Navy Crane Center approval. The specific drive OEM parameter ranges are not necessarily acceptable for the crane design and are therefore not considered the allowable crane design ranges. Changes to as-built parameters where the crane OEM does not specify an allowable crane design range are crane alterations requiring Navy Crane Center approval. Appropriate testing requirements shall be included to demonstrate proper accomplishment of the alteration.

b. Changing, adding, or deleting a line of software code is a crane alteration requiring Navy Crane Center approval if the line of code controls or provides fault detection for a crane motion or an operational safety device. Appropriate testing requirements shall be included to demonstrate proper accomplishment of the alteration.

c. Changing, adding, or deleting a line of software code is a locally approvable crane alteration if the line of code does not control or provide fault detection for a crane motion or an operational safety device. Appropriate testing requirements shall be included to demonstrate proper accomplishment of the alteration.

d. Temporarily changing, adding, or deleting a line of software code or a programmable parameter for troubleshooting or emergent conditions is not a crane alteration provided that the software code and/or parameter settings are returned to their previously load tested settings before returning the crane to service.

4.4.5.1 Exceptions. An alteration as described in paragraph 4.4.5 may be approved locally if the change is approved by the drive OEM and the crane OEM.

4.4.5.2 Testing. A load test for hoist drives will be required in accordance with section 3 after software or programmable parameter adjustments or changes, whether or not the changes are saved, affecting brake settings, torque proving, or current limit. If the parameters are reset and identical to previously load tested parameter settings, then a load test is not required. There shall be written verification that the parameters have been reset to their previously load tested settings.

4.4.5.2.1 Load Test Exceptions. Alterations that do not require load test include:

a. Reloading of software. The correct software shall be assured.

b. Adjustment or changes to software, whether or not the changes are saved, provided the adjusted or changed software does not affect brake settings, torque proving, or current limit. The correct software shall be assured.

c. Programmable parameter changes, whether or not the changes are saved, provided the parameter changes do not affect brake settings, torque proving, or current limit. The correct parameters shall be assured.

4.4.6 Damaged Crane Booms

4.4.6.1 Main Chord, Telescoping Boom, and Articulating Boom Damage. Any category 1 or category 4 crane, or category 3 truck mounted crane, having a damaged telescoping or articulating boom or that has a lattice type boom that has sustained structural damage to the main chords, whether tubular or structural steel shape, shall be immediately removed from service. Some booms of the newer truck, cruiser, and crawler cranes are manufactured of lightweight, thin wall, high strength low alloy tubular structural members. When the main members of these booms are damaged in any manner, including slight dents, they are severely weakened and have failed at loads significantly below rated capacity. Except as noted below for ASTM A36 steel open section members, weld repairs shall be performed by the OEM or OEM designated repair facility in accordance with OEM specifications. Alternatively, repairs may be performed by the activity if the OEM provides procedures and specifications. These repairs shall be handled as locally approved alterations.

If the OEM does not provide repair procedures, the repairs may be made if the requesting activity prepares a weld repair procedure with the approval of a qualified welding engineer and provides confirmation that the welding will be performed by a certified welder for that procedure. Weld repair procedures developed by the activity shall be submitted with an alteration request requiring Navy Crane Center approval.

Weld repairs of boom chord members made of open section ASTM A36 steel (and similar weldable mild steels) may be performed as locally approved alterations using locally developed welding procedures.

4.4.6.2 Boom Lacing Damage. Booms with lacing damage shall be removed from service until a structural inspection can be made to determine the extent of the damage. Upon inspection, the activity engineering organization shall make the determination whether to place the crane back in operation or require an immediate repair before the crane can be operated. Repairs to lacing members shall be in accordance with OEM's instructions. These repairs shall be handled as locally approved alterations.

When OEM instructions are not available, repair procedures shall be developed by the activity engineering organization and submitted with an alteration request for Navy Crane Center approval.

Weld repairs of lacing members made of open section ASTM A36 steel (and similar weldable mild steels) may be performed as locally approved alterations using locally developed welding procedures.

4.4.6.3 Testing and Recertification. Following repairs to a boom, the work shall be inspected and the crane tested and recertified in accordance with section 3.

4.4.7 Crane Components and Features versus Current Design Standards

a. Crane components and features that pre-date and/or do not comply with UFC 3-320-7N may be retained provided they continue to operate satisfactorily and there is no evidence of distress. Non-compliances that violate sound engineering principles shall be corrected within practical limits. Replacement with a part or component different from the original shall be treated in accordance with this section.

b. If an alteration request proposes a replacement component that is clearly an improved design and/or material, it may be submitted without calculations.

c. If a proposed replacement shaft does not provide a 1.5 design factor for infinite life, then its service life (based on a conservative duty cycle) for a 1.5 design factor shall be calculated.

4.5 Alteration Records. Full documentation of alterations with local or Navy Crane Center approval, installation, and certification actions shall be filed in the crane equipment history file. The appropriate engineering drawings shall be revised as necessary.

CRANE ALTERATION REQUEST	PAGE 1 OF

ACTIVITY	ACTIVITY WORK ORDER NUMBER
CRANE ALTERATION TITLE	CRANE ALTERATION REQUEST NUMBER
	NAVY CRANE CENTER INFORMATION ( ) NAVY CRANE CENTER APPROVAL ( )

CRANE DESCRIPTION

CAPACITY/TYPE	NUMBER	MANUFACTURER	SPS CRANE YES____NO____

CRANE ALTERATION DESCRIPTION

ASSEMBLY	SUB-ASSEMBLY	COMPONENT	PART

REFERENCES (DRAWINGS, WEIGHT HANDLING DEFICIENCY REPORTS, ETC)

NARRATIVE

ACTIVITY APPROVAL / REQUEST

PREPARER	DATE	PHONE	FAX or EMAIL
REVIEWER	DATE	PHONE	FAX or EMAIL
CHIEF CRANE ENGINEER	DATE	PHONE	FAX or EMAIL
CONTRACTING OFFICER'S REP. (IF PREPARED AND APPROVED BY CONTRACTOR)	DATE	PHONE	FAX or EMAIL

DATE NAVY CRANE CENTER APPROVAL NEEDED	NAVY-WIDE APPLICATION YES ( ) NO ( )

NAVY CRANE CENTER APPROVAL

REVIEWER	DATE	PHONE DSN	FAX
DIRECTOR, IN-SERVICE ENGINEERING	DATE	PHONE DSN	FAX

APPROVED ( )	CONDITIONALLY APPROVED ( )	DISAPPROVED ( )
COMMENTS ON ATTACHED CONTINUATION PAGE(S) YES ( ) NO ( )		

FIGURE 4-1 (1 of 3)

CRANE ALTERATION REQUEST	CRANE ALT REQUEST NUMBER	PAGE OF
NARRATIVE (CONTINUED)		

FIGURE 4-1 (2 of 3)

CRANE ALTERATION REQUEST FORM INSTRUCTIONS

This form is designed for fax transmission without a cover page or by e-mail and, with enclosures and signatures, shall be the official document. Electronic submission will be accepted without signatures but the names of the preparer, reviewer, and chief engineer shall be filled in. The submitting activity will be responsible for instituting the administrative controls over this process. The e-mail address is m_nfsh_ncc_cranealt@navy.mil. The fax number is (757) 396-1772.

1. CRANE ALTERATION REQUEST Block - Enter total number of pages.

2. ACTIVITY Block - A uniform name and address for activity shall be used. Reference: Plain Language Address Directory (USN PLAD 1) used for messages. Example: NAVSHIPYD PORTSMOUTH NH.

3. ACTIVITY WORK ORDER NUMBER Block - Work authorization document number. For alterations to cranes of the same class, only the current pending work authorization number(s) is required.

4. CRANE ALTERATION TITLE Block - A uniform system for titles shall be used. An example is: REPLACEMENT OF MAIN HOIST ELECTRIC BRAKE LININGS. First Word/Phrase - Use "REPLACEMENT," "ADDITION," "REMOVAL," "REARRANGEMENT," "ALTERATION," “DOCUMENTATION (AS-BUILT VARIANCE),” or “REPAIR OF CRANE BOOM.” Second Word - Use "OF" or "TO." Third Word/Phrase - Affected assembly, sub-assembly, component, or part. Fourth Word/Phrase - Affected component or part.

5. CRANE ALTERATION REQUEST NUMBER Block - All alteration requests, whether for Navy Crane Center or local approval, shall be numbered in sequence. In the example N00102-96-001, N00102 is the activity six digit alpha-numeric Unit Identification Code (UIC), 96 indicates fiscal year 1996, and 001 means the first alteration request of FY96 for this activity. Navy Crane Center issued crane alterations will use the UIC of N3258A.

a. Indicate if ALT is for Navy Crane Center information or approval.

6. CRANE DESCRIPTION Block - CAPACITY/TYPE, NUMBER, MFR, Self-explanatory; SPS Crane, (SPS as defined by NAVSEA 0989-030-7000).

7. CRANE ALTERATION DESCRIPTION Block - An example, consistent with the example title above, is: ASSEMBLY - Main Hoist, SUB-ASSEMBLY - NA, COMPONENT - Electric Brake, PART - Linings.

a. REFERENCE DRAWINGS – Drawings affected by the alteration, which will be updated.
b. NARRATIVE - Contains fully developed alteration request and any references or enclosures.

8. ACTIVITY APPROVAL/REQUEST Block - For locally approved alterations, line out "REQUEST." For Navy Crane Center approval, line out "APPROVAL.”

a. PREPARER, DATE, PHONE, FAX or EMAIL- Self-explanatory.
b. REVIEWER, DATE, PHONE, FAX or EMAIL- Self-explanatory.
c. CHIEF CRANE ENGINEER, DATE, PHONE, FAX or EMAIL- Self-explanatory.
d. CONTRACTING OFFICER’S REPRESENTATIVE, DATE, PHONE, FAX, or EMAIL- If the request was prepared and approved by a contractor, indicated concurrence by the contracting officer’s representative.
e. DATE Navy Crane Center APPROVAL NEEDED - Self-explanatory.
f. NAVY-WIDE APPLICATION - Indicate if this alteration may have applicability to cranes at other activities.

NOTE: At least two different signatures are required in blocks 8.a, 8.b, or 8.c.

9. NAVY CRANE CENTER APPROVAL Block

a. REVIEWER, DATE, PHONE, FAX - Self-explanatory.
b. DIRECTOR, IN-SERVICE ENGINEERING, DATE, PHONE, FAX - Self-explanatory.
c. APPROVED - Self-explanatory.
d. CONDITIONALLY APPROVED - "Approved subject to incorporation of comments:".
e. DISAPPROVED - "Disapproved for the following reasons:".
f. COMMENTS ON ATTACHED CONTINUATION PAGE(S) - Self-explanatory.

10. Continuation page - Follow instruction #5 and number the page.

FIGURE 4-1 (3 of 3)

MANDATORY ALTERATION
N3258A-

The alteration identified below, and attached, has been classified as:

_____ Mandatory – Now: Cranes shall be removed from service until alteration is complete.

_____ Mandatory – Delayed: Alteration shall be accomplished before or during the next ( ) Type A ( ) Type B ( ) Type C inspection per NAVFAC P-307 or within _____ days.

_____ Mandatory – When Needed: Alteration will correct a deficiency when the deficiency occurs.

_____ Mandatory – Site Specific: Approved as a unique alteration for an activity or particular crane.

ALTERATION IDENTIFICATION

ACTIVITY	ORIGINAL ALTERATION NUMBER
ALTERATION TITLE	ALTERATION ORIGINALLY LOCALLY APPROVED ( ) SUBMITTED FOR NAVY CRANE CENTER APPROVAL ( )

CRANE DESCRIPTION

CAPACITY / TYPE	MANUFACTURER	SPS CRANE YES____NO____

ALTERATION DESCRIPTION

ASSEMBLY	SUB-ASSEMBLY	COMPONENT	PART

NARRATIVE

COMNAVSEASYSCOM CONCURRENCE: Received _____ N/A _____

NAVY CRANE CENTER APPROVAL

CONFIGURATION MANAGER	DATE	PHONE DSN	FAX
DIRECTOR IN-SERVICE ENGINEERING	DATE	PHONE DSN	FAX

NOTIFICATION OF COMPLETION

WHEN THE ALTERATION IS COMPLETED, A COPY OF THIS FORM SHALL BE RETURNED TO THE NAVY CRANE CENTER WITH THE FOLLOWING INFORMATION:

CRANE IDENTIFICATION _____ COMPLETION DATE_____

DISTRIBUTION

FIGURE 4-2

(INTENTIONALLY LEFT BLANK)

SECTION 5
EQUIPMENT HISTORY FILE

5.1 Equipment History File. Each activity shall establish and maintain an individual equipment history file on each crane. The equipment history file shall contain the documentation shown in table 5-1 for the time period indicated. The files shall be made available to Government oversight agencies (e.g., OSHA, Navy Crane Center) upon request. For convenience, the files may be together in one central location, or portions of the file may be located separately so long as they are available upon request. Electronic versions of these equipment history files are acceptable.

TABLE 5-1
Equipment History File

	Documentation	**Minimum Retention Time**
1	Maintenance Inspection Specification and Records (Indicate the scheduling basis, either hour meter or calendar month)	
1.1	Type "A" inspection	Latest plus previous two (if on calendar basis) or latest plus previous two years (if on engine hour operating basis)
1.2	Type "B" inspection	Latest plus previous one
1.3	Type "C" inspection	Latest plus previous one
1.4	Type “Annual”	Latest plus previous one
2	Crane Operator's Daily Checklist (Monthly checklist for non-cab operated category 3 bridge, gantry, and wall cranes). Monthly inspection of floating cranes used in construction.	Current month plus previous month (current month plus two previous months for cranes used in construction)
3	Shop Repair Orders or Other Work Documents	
3.1	Load Bearing/Load Controlling Parts and Operational Safety Devices	Seven years
3.2	All others	One year
3.3	Work Documents invoking Crane Alterations	Life of crane
4	Non-Destructive Test Reports	Latest (for component)
5	Crane Condition Inspection Record	Current (including interim’s) plus one previous annual record
6	Certification of Load Test And Condition Inspection	Current (including interim’s and extensions) plus one previous load test certification.
7	Third Party Certifications (for applicable cranes)	Current plus one previous certification
8	Wire Rope Breaking Strength Certification for New Cranes and for Replacement Wire Rope on Existing Cranes (including standing ropes) (rope manufacturer's certification that the rope meets the published breaking strength, or the actual breaking strength of a sample taken from the reel and tested) (Note: For cranes used in cargo transfer, a wire rope certification is required for running rope regardless of the age of the crane and it shall be a certification of actual breaking strength.)	Latest

TABLE 5-1
(continued)

	Documentation	Minimum Retention Time
10	Deficiency Reports (i.e., load bearing or load controlling parts or operational safety devices)	Seven years
11	Purchase Contracts (If available)	Life of crane
12	Accident Reports	Life of Crane
13	Hook Tram Point Base Measurement	Life of hook
14	Operational Lifts Exceeding the Certified Capacity	Life of crane
15	Specification Data Sheets	Life of crane
16	Crane Acceptance Test (If available)	Life of crane
17	Mobile Crane Operating Procedures for Ancillary Equipment	Life of crane
17.1	Completed Procedures When Used	Seven years
18	Crane Roller Clearance Data Standard of Acceptance	Life of crane
19	Slewing bearing clearance readings	Life of bearing
20	Oil analysis/vibration analysis data	Life of component
20.1	(Alternate. Internal gear inspection report)	(Latest)
21	Material Inspection Report for Floating cranes (per OPNAVINST 4780.6)	Latest, including waivers of depot availability
22	Coupling alignment data per appendices C or D	Latest
23	Lubrication Records	One year
24	Hoist Rollback Data	Life of crane
25	Controlled Disassembly Reassembly Procedures	Life of crane
25.1	Completed Procedures When Used	Seven years
26	Hoist brake actuator Belleville torque spring cycle limit	Life of component
27	Individual hoist brake actuator Belleville torque spring number of cycles	Latest
28	Hydraulic mobile crane OEM inspection and replacement intervals for hoist drives. Age of crane/component.	Life of crane/component
29	Setting of load shutdown device (see paragraph 11.5)	Life of crane/component
30	Copy of Rail Certification per NAVFACINST 11230.1	Current certification
31	Maintenance inspection, lubrication, or servicing deferral and justification.	Latest
32	Floating crane barge maintenance documentation (paragraph 2.1)	Latest plus previous year
33	Type of hook material and hook manufacturing method (If available).	Life of hook

SECTION 6
OPERATOR LICENSING PROGRAM

6.1 Applicability. All personnel, except contractor personnel, who are assigned duties involving the operation of Navy shore based category 1, category 2, cab operated category 3, or category 4 cranes shall be qualified and licensed in accordance with these provisions. The licensing requirements of OPNAVINST 4790.2 shall be followed for operators of aircraft and helicopter crash cranes covered by that document. Operators licensed in accordance with these provisions may operate cranes at any naval activity provided that all of the requirements of section 6.2 are followed.

6.1.1 Contractor Personnel. Contractor personnel who operate Navy owned cranes shall be certified by the contractor, at the contractor's expense, as fully qualified. Operator qualifications shall be, as a minimum, equivalent to the requirements of this publication. To achieve licensing equivalency, all actions identified in sections 6, 7, and 8 shall be performed with a few minor exceptions. The initial application for license process is not required and the contractor may use company unique forms for the records identified in section 8. However, all information required by sections 6, 7, and 8 including test questions in the appendices, shall be included on the company forms. Also, the arrangement and control of contractor test facilities on non-government property is the responsibility of the contractor. The contractor shall provide documentation on operator qualifications to the contracting officer prior to an operator engaging in any mode of equipment operation. Documentation shall be retained by the contracting officer in the contract files.

6.1.2 Contractors Operating Navy Cranes Used In Construction. Effective 10 November 2014, contractor personnel (including BOS contractor personnel) who operate Navy cranes while engaged in construction operations shall be certified or licensed in accordance with 29 CFR 1926.1427(b) or (c), in addition to the certification required by paragraph 6.1.1 above. After the effective date, licensing per paragraph 6.1.1 of NAVFAC P-307 will no longer be permitted for contractor operators of Navy cranes if they are engaged in construction operations.

6.1.3 Non-Cab Operated Category 3 Crane Operators. Licensing is not required for operators of non-cab operated category 3 cranes. However, all operators of non-cab operated category 3 cranes shall be trained in accordance with section 13 and demonstrate adequate knowledge of the operation of each specific type of equipment they are authorized to operate.

6.2 Use and Limitations of Licenses

6.2.1 Significance. A Crane Operator License is official evidence that the person named therein has been officially accepted as qualified to operate the types of cranes specified on the license.

6.2.2 Authorized Operation. Possession of a license does not of itself constitute authorization to operate cranes. Such authorization shall be specifically obtained from the supervisor charged with responsibility for crane operations.

6.2.3 Possession of Licenses. Operators shall have such licenses on their person when operating cranes.

6.2.4 Equipment Familiarity Checkouts. The Navy's cranes inventory consists of a wide variety of equipment types, makes, and models with variations in control mechanisms and operational characteristics. For this reason, it is not feasible to devise and administer examinations and issue licenses to cover each equipment variation. The objective of the licensing program is to ensure that operators are qualified to operate cranes having the same essential basic functional characteristics. Possession of a license means that the person holding such license is qualified to operate any crane with the characteristics of the types authorized on the license, provided the operator has been checked out by the crane operations supervisor or work leader (classified as WL) on the specific unit to be operated.

6.2.5 No-Load Licenses for Operation by Maintenance, Inspection, and Engineering Personnel. Crane maintenance, inspection, and engineering personnel who operate cranes incidental to maintenance or troubleshooting of the equipment shall be trained, tested and licensed in accordance with these requirements with the following exceptions:

a. The licensing performance test may be modified to suit appropriate conditions that the maintenance, inspection, and engineering personnel may experience.

b. Lifting of loads is not permitted.

c. The license shall indicate "NO LIFTING OF LOADS ALLOWED."

6.3 Designation of License Program Personnel. The activity commanding officer shall designate in writing the official and organization responsible for the management and administration of the program for instructing, testing, and licensing of operators. The official responsible for the license program shall designate in writing license issuing officials, instructors, and performance examiners. The instructors and examiners shall be qualified to effectively instruct, examine, and test license applicants. This includes the capability to develop and conduct formal courses of classroom instruction on the various aspects of equipment operation and safety. The performance examiner shall be selected from the best-qualified equipment operators. Navy civilian and military performance examiners shall hold a license for the specific equipment for which they are conducting operator testing. Examiners shall be completely familiar with all aspects of its safe and effective operation.

SECTION 7
OPERATOR QUALIFICATION AND TESTING

7.1 Personal and Physical Qualifications

7.1.1 Physical Faculties and Fitness. A physical examination by a licensed health care professional is required. The examination shall be in accordance with the criteria established in U.S. Department of Transportation, Federal Highway Administration, Motor Carrier Safety Regulation, 49 CFR 391, Sections 41-43. (Where the term “motor vehicle” is referenced in 49 CFR 391, it shall mean “crane.”) Conformance to or deviation from these requirements shall be noted by the examining health care professional and forwarded to the crane operator licensing office for inclusion in the applicant's file. This examination is not required for non-cab category 3 crane operators.

7.1.1.1 Deviations from Physical Qualification Requirements. For an operator who has previously established qualifications to operate, deviations from the physical requirements are not necessarily totally disqualifying. However, where such deviations exist, competent medical and management authorities shall give special consideration to each individual case and may recommend waivers. Waivers may be approved by the activity commanding officer. Normally, waivers shall not be granted for applicants who have never before established operator qualifications. Any limitations imposed by reason of physical defects shall be noted on the operator's license and license record.

7.1.1.2 Department of the Navy Drug Free Workplace Program (DFWP). Activity commanders shall ensure the DFWP policies and procedures of Department of the Navy Civilian Human Resources Manual, Subchapter 792.3, are carried out at the activity level.

7.1.1.3 Other Qualification. Commanding officers may require the applicant to meet additional personal and physical qualifications for operating specific items of equipment. Specialized tests, such as speed of reaction time, may be administered by the license examiner. Persons administering tests shall be qualified in the administration of the tests and shall follow the test equipment OEM's operating procedures and recommendations.

7.1.1.4 Grounds for Disqualification. Notwithstanding the required physical examination, evidence of poor attitude or emotional instability that would render applicants a hazard to themselves and others, or that in the opinion of the license examiner would interfere with an applicant's safe or efficient performance of duties, is sufficient cause to disqualify an applicant. Justification for disqualification of the applicant on the grounds of emotional instability may be derived by the examiner from interviews, reference to the applicant's medical and personnel records, analysis of accident reports involving the applicant, or the results of specialized tests.

7.2 Language Ability. Applicants shall be able to write and speak English or the prevailing language and shall be able to read and understand signs and orders applicable to the operation of the equipment.

7.3 Test Reports. The format of the physical examination and the medical examiner's certificate may be determined by the medical office making the examination, with due consideration for the provisions of paragraph 7.1.1. Medical and specialized test results may be presented in narrative form or graphically as devised locally.

7.4 Required Safety Instruction, Written Examinations, and Performance Tests. The following paragraphs describe the minimum requirements for obtaining a license. Prior to taking any performance test, the license candidate shall be thoroughly trained on the operation of the type of crane for which a license is to be issued. The candidate shall operate that type of crane only under the direct observation of a licensed operator. The licensed operator shall retain full responsibility for the safe operation of the crane. The supervisor shall approve lifting of loads based upon the candidate's demonstration of knowledge of the equipment and operation without loads. The candidate shall not perform complex lifts.

7.4.1 Crane Safety Course. Applicants for initial license shall be given a formal course of instruction in crane safety as indicated in section 13. Applicants for license renewal shall be given refresher training as required by section 13. For instructor-led courses a written examination shall be given to ensure that applicants are and continue to be thoroughly familiar with crane safety regulations.

7.4.2 Specific Crane Written Examinations. Applicants shall pass a written test for each type of crane for which a license is to be issued. The tests shall include those questions that are provided in appendices G (category 1 and 4 cranes), H (category 2 and cab operated category 3 cranes), and I (mobile boat hoists and rubber-tired gantry cranes) as applicable. These questions shall be supplemented for the particular operating characteristics and features of the activity's cranes, and its unique mission requirements. Activities that utilize mobile cranes shall develop load chart exercises specific to each type of crane in use at their activity.

7.4.2.1 Evaluating and Scoring Written Examination. Answers shall not be marked wrong if the response is substantially correct, but not well stated. Although the answers contained in this publication have been screened and approved, equipment operation is not an exact science. Some answers, however, are matters of fact and are not subject to interpretation. In cases of dispute, the judgment of the examiner will be final.

7.4.2.2 Grading of Examination. Incorrect answers shall be annotated. The minimum required percentage of correct answers is 70 percent. The latest graded examination shall be filed in the operator license file and shall not be returned to the applicant, however, the applicant shall be notified of the grade attained and all incorrect answers shall be critiqued.

7.4.3 Performance Tests. Applicants shall demonstrate operating proficiency by passing a performance qualification test for each type of crane for which a license is to be issued. The basic requirements for these tests are set forth in appendices J (category 1 and 4 cranes), K (category 2 and cab operated category 3 cranes), and L (mobile boat hoists). Additional test requirements shall be developed for the particular

operating characteristics and features of the cranes as well as the unique mission requirements of that activity. It is assumed that the applicant, because of experience and training, is sufficiently capable of performing the various tasks called for by the problem situations described in the tests.

7.4.3.1 Evaluating and Grading Performance Tests. Performance qualification tests shall be graded as satisfactory or unsatisfactory. If subsequent make-up tests are authorized, only those items that were checked as incorrect need be tested again. In evaluating these tests, examiners shall be guided by the applicant's performance rather than experience, background, and history. The latest graded performance test shall be filed in the operator's license file.

7.4.3.2 Notation on Test Forms. A short line is provided before each item on the performance qualification test form. The examiner shall make a check mark to indicate that the applicant has correctly performed or answered the question. The examiner shall indicate by zero or circle where applicant fails to perform or answer correctly. The examiner shall provide a short written explanation of all failures. Items that are not applicable shall be marked "NA."

7.4.3.3 Test Facilities. Test facilities shall include course sites, flags, barricades, and other devices to simulate actual working conditions. However, tests shall not be conducted in actual working conditions and environments where operator error could result in damage to equipment or personnel not part of the test.

7.4.3.4 Test Equipment. Test equipment refers to units of equipment in use for testing purposes. Ordinarily these units are used for other work and assigned for test purposes as required. Caution shall be exercised to ensure that the test equipment is in a safe operating condition when furnished to an applicant for operation. The crane used by the applicant for the test shall conform to the same basic functional characteristics, attachments, types of control, and similar details as the equipment noted in the application for license.

(INTENTIONALLY LEFT BLANK)

SECTION 8
LICENSING PROCEDURES AND DOCUMENTATION

8.1 Application for Crane Operator License

8.1.1 Purpose of Application Form. A sample format is shown in figure 8-1. This form provides a progressive presentation of facts and developments pertinent to applying for and issuing or denying licenses to applicants.

8.1.2 Use of the Application Form. Part I of the application shall be prepared by the applicant and sponsor. Part II shall be endorsed by the applicant's supervisor. Parts III and IV shall be prepared by the license office. The use of appropriate spaces in parts III and IV, and the preparation and proper routing of copies needed, simplifies and reduces paperwork.

8.2 Control of Applications for Tests and Licenses. Use of a status control sheet will facilitate processing of individual applications by means of brief entries for each step in the application, test, and license process. Its use enables follow-through action and facilitates scheduling tests and examinations. The following are some of the items that might be included on a status control sheet:

a. Applicant's name.

b. Description of equipment license requested.

c. Date of supervisor's request for test and license.

d. Date and status of action notice to supervisor.

e. Date and results of physical examination and any specialized tests.

f. Date and results of written tests and prerequisite information if required.

g. Date and results of performance qualification test.

h. Date and status of license issuance or denial.

8.3 Form and Content of Licenses

8.3.1 Essential Elements of Licenses. The essential elements of a Crane Operator License (figure 8-2) are identification, qualification, limitation, authorization, and validity.

8.3.1.1 Identification. The principal identifying entries are the name of the operator and the license number.

8.3.1.1.1 Name. The operator's name, as contained in official personnel records, shall be noted in this space. Use of permanent personnel identification numbers is optional.

8.3.1.1.2 License Number. The entry in this space calls for a sequential number not likely to be duplicated and one that can be issued by any naval activity. It incorporates a two-part figure. The initial part is the activity unit identification number or identification number of the original license issuing activity. The second part is the appropriate sequential number in order of issue.

8.3.1.2 Qualified to Operate. These entries include descriptions of the functional characteristics of the types of cranes that the operator is licensed to operate.

8.3.1.2.1 Crane Type. Include each type of crane the operator is qualified to operate (portal crane, floating crane, bridge crane, mobile crane, etc.).

8.3.1.2.2 Capacity. Indicate the maximum capacity for each crane type.

8.3.1.2.3 Attachment. The basic qualification will be for hook work. Indicate attachments, aside from hooks, (clamshell, bucket, etc.) that the operator is qualified to operate.

8.3.1.2.4 Type of Control. Typical entries are electric (E), hydraulic (H), or mechanical (M).

8.3.1.2.5 Examiner. The examiner shall verify, by his/her initials, that the operator successfully passed the performance requirements for each applicable type of crane.

8.3.1.3 Restrictions. Entries in this category are physical or medical restrictions (corrective lenses, daytime operation only, etc.).

8.3.1.4 Authorization. Evidence of official authorization, as a duly licensed crane operator, is the signature of the issuing official on the license.

8.3.1.4.1 Date Issued. This date shall be the date the license was initially issued, unless additional equipment is added at a later date. In this case, indicate the date of license for the additional equipment.

8.3.1.5 Validity. Unless suspended or otherwise revoked, the license is valid until the stated expiration date, which shall be not more than two years from the date of initial issuance. If portions of the license are revoked for particular equipment types, the license remains valid for the other equipment types noted. If the license is totally revoked, the operator shall turn in the license to the licensing activity.

8.4 Crane Operator License Record. The Crane Operator License Record (figure 8-3) is a detailed record of the operator's current license qualifications that shall be included in the operator's license file. It includes dates of issuance and expiration, types of cranes, the date of physical examination, the dates of revocation, medical restrictions, and the operator's birth date. As explained below, a system for staggering renewal dates utilizes the operator's birth date as the key.

8.5 License Issuance, Renewal, Suspension, and Revocation

8.5.1 License Issuance. The license issuing official shall issue an operator license only after all the requirements for the specific license are met.

8.5.2 Expiration of Licenses. The expiration date for the license shall not exceed two years from the date of initial issuance. Expiration dates shall be noted on the operator license and the license record. This could be the operator's birth date in odd or even years, consistent with the operator's year of birth whether odd or even. For example, if the birth date of a licensed operator is 20 June 1950, the expiration date of his license could be 20 June 1992 and so on every two years on even years.

8.5.3 Procedure for Renewal. The activity shall use a tickler file to flag renewal action approximately 90 days before the expiration date. Arrangements for renewal examinations and tests shall be made early enough to enable all items to be cleared before the expiration date.

8.5.3.1 Requirements for Renewal. The following are required for license renewal:

a. Physical examination. (The physical examination need not be concurrent with the license renewal, but a physical examination is required every two years that an operator holds a license. The Navy medical system standard practice of physicals expiring on the last day of the month that the physical was taken meets this requirement.)

b. Specialized tests if required by the activity.

c. Operators shall attend and pass required refresher course of safety instruction (see section 7). Refresher courses shall be taken no earlier than 3 months before renewal.

d. The activity has the discretion to determine if performance tests are required. If an operator has not operated a particular type of crane during the licensing period, a performance retest is mandatory. Written documentation, verifying operation, shall be provided to waive the performance test. Written documentation shall include, as a minimum, the name of the operator, the crane number, type, and capacity of the crane, and the date and hours operated. Copies of ODCL's are acceptable.

8.5.4 Suspension. Licenses may be suspended for cause at any time by the licensing office. Licenses shall be automatically suspended when the operator is charged with an accident. The requirements for renewal shall consist of those elements described in paragraph 8.5.3.1 (and any additional requirements) considered necessary by management after investigation and consideration of the circumstances relating to the accident or other occurrence warranting the suspension. Documentation of suspension, justification, and renewal actions, including test results if applicable, shall be included in the operator's license file.

8.5.5 Revocation. Where circumstances require revocation of all or a portion of the operator's license, supporting justification shall be included in the operator's license file.

Additionally, the date of revocation shall be annotated on the Crane Operator License Record.

8.6 Operator License Files. All relevant forms and supporting data shall be kept in the operator's license file. There shall be an individual file kept for each applicant and operator. For convenience, the file may be together in one central location, or portions of the file may be located separately so long as they are available upon request. Electronic versions of the file are acceptable.
Each operator's license file shall contain the following as a minimum:

a. Application for Crane Operator License.

b. Crane Operator License Record.

c. Copy of current operator license or incidental (no load) operator license.

d. Current certificate of medical examination and results of any specialized tests.

e. Specific crane written examinations (graded and signed by examiner and dated).

f. Performance tests, latest for each type of crane (graded and signed by examiner and dated).

g. Initial safety course record and latest refresher safety course record (graded and signed examination or certificate of completion).

h. License suspension and renewal records.

i. Revocation justification.

Read the PRIVACY ACT STATEMENT on reverse before completing this application.

APPLICATION FOR CRANE OPERATOR LICENSE.

PART I - APPLICATION

1. NAVAL ACTIVITY	2. APPLICANT'S NAME	3. RANK, RATE OR CIVILIAN GRADE

4. DEPARTMENT, DIVISION AND/OR SHOP ASSIGNED TO	5. APPLICANT'S JOB TITLE

6. DESCRIPTION OF EQUIPMENT LICENSE REQUESTED

(a) TYPE OF CRANE	(b) CAPACITY	(c) TYPE OF CONTROL	(d) TYPE OF ATTACHMENT

7. STATEMENT OF QUALIFYING EXPERIENCE

8. DESCRIPTION OF CRANES APPLICANT IS CURRENTLY LICENSED TO OPERATE

9. SPONSOR'S STATEMENT OF APPLICANT'S READINESS AND/OR PREPARATORY TRAINING FOR TEST

(NOTE: The sponsor can be either a qualified instructor or licensed operator.)

Signature _____

Sponsor

PART II - REQUEST FOR ADMINISTERING TESTS AND EXAMINATIONS AND ISSUING LICENSE

FROM:

TO:

It is requested that the license for type of crane described in item 6 above be issued to this applicant upon his/her successful completion of the required examinations and tests.

Signature _____

Title _____

Department, Division or Shop Supervisor

(OVER)

FIGURE 8-1 (1 of 2)

PART III - ACTION ON SUBJECT APPLICATION

FROM: DATE

TO:

☐ Arrangements will be made to proceed with examinations and tests as requested.

☐ No action will be taken on this application for the following reason:

Signature _____

Title _____

PART IV - LICENSE ACTION

FROM: DATE

TO:

☐ The subject license has been issued/annotated for the requested type of crane.

☐ The applicant has failed his/her physical examination.

☐ The applicant has failed to qualify for the subject license.

___ number of days (the established waiting period) must elapse before a new application may be made for this license.

Signature _____

Title _____

PRIVACY ACT STATEMENT

This statement is provided in compliance with the provisions of the Privacy Act of 1974 (PL 93-579) (N00011 CO2) which require that Federal agencies must inform individuals who are requested to furnish information about themselves as to the following facts concerning the information.

1. AUTHORITY: 5 U.S.C. 301 Departmental Regulations

2. PRINCIPAL PURPOSE: To apply for a license to operate Navy cranes.

3. ROUTINE USES: To be used by agency officials to determine the employee's eligibility to operate Navy cranes. May be used by safety and security officials to verify individual's qualifying experience.

4. MANDATORY OR VOLUNTARY DISCLOSURE: The disclosure of information requested is voluntary. However, failure to complete the form will result in nonissuance of license.

FIGURE 8-1 (2 of 2)

CRANE OPERATOR LICENSE				
NAME OF OPERATOR			DATE ISSUED	
LICENSE NO.			DATE EXPIRES	
DATE OF BIRTH	COLOR OF HAIR	COLOR OF EYES	HEIGHT	WEIGHT
THE HOLDER OF THIS CARD IS QUALIFIED TO OPERATE U.S. NAVY CRANES AS SPECIFIED ON REVERSE OF THIS CARD.				
SIGNATURE OF ISSUING OFFICIAL				
SIGNATURE OF OPERATOR				
Card must be carried at all times when operating Navy cranes. Not transferable to other personnel. NOTE: INFORMATION ON THIS LICENSE IS SUBJECT TO SAFEGUARD AND DISCLOSURE CONDITIONS OF THE PRIVACY ACT OF 1974.				

FRONT

QUALIFIED TO OPERATE				
CRANE TYPE	CAPACITY	ATTACHMENT	TYPE CONTROLS	EXAMINER
RESTRICTIONS (Vision, Hearing, Other)				

BACK

FIGURE 8-2

CRANE OPERATOR LICENSE RECORD

LICENSE NO.	NAME	DATE OF BIRTH

SPECIAL REQUIREMENTS FOR		
VISION	HEARING	OTHER

EQUIPMENT LICENSED TO OPERATE

EQUIPMENT TYPE DATA			LICENSING DATA						
CRANE TYPE	ATTACHMENT	TYPE OF CONTROL	ISSUING ACTIVITY	EXAMINER	DATE ISSUED	DATE REVOKED	EXPIRATION DATE	RENEWAL DATE	DATE OF PHYSICAL EXAM

NOTE: INFORMATION ON THIS FORM IS SUBJECT TO SAFEGUARD AND DISCLOSURE CONDITIONS OF THE PRIVACY ACT OF 1974.

FIGURE 8-3

SECTION 9
OPERATOR CHECKS

9.1 Pre-Use Check (Category 1, 2, and 4 Cranes and Cab Operated Category 3 Cranes). A complete check of the crane shall be performed by the operator prior to the first use of the crane each day (whether the crane is used in production, maintenance, testing, or being relocated). For cranes used in construction operations, the check shall be performed each shift. The crane team shall assist the operator in performance of the operation portion of the ODCL as necessary. A Crane Operator's Daily Checklist (ODCL) shall be used for this purpose. If only one hoist will be used on a multiple hoist crane, then the ODCL checks are not required for the unused hoist. This situation shall be documented in the "remarks" section of the ODCL. The operator shall sign the ODCL at the completion of the check. In addition, the first operator in each subsequent shift that day shall perform the operational checks of paragraph 9.1.2.1.4 (except that the boom hoist limit switches need not be checked). All other operators shall review and sign the initial ODCL and review any tags posted on the crane. The ODCL shall be turned in to the supervisor after the last use of the crane each day. The only exceptions to completion of the appropriate check prior to making a lift are when a load is suspended from the hook for a period that spans more than one operator and the lift cannot be practically or safely interrupted or when critical continuous operations are involved where the performance of a subsequent ODCL would adversely affect the safety and integrity of the crane operation (e.g., docking or undocking of a ship). In those instances, the appropriate check shall be performed immediately upon completion of the lift or critical continuous operation, unless the equipment will not be operated again by that operator. For operations not involving a lift (e.g., moving the crane to a new location), the operator shall check those functions applicable to the operation to be performed.

9.1.1 Documentation. Figure 9-1 identifies attributes applicable to most types of cranes. If a crane is equipped with load bearing or load controlling parts or safety devices not shown in figure 9-1, they shall be included in the activity's ODCL. Shortened forms, customized to particular categories of cranes, may be used provided they include all attributes applicable to the particular cranes covered.

9.1.2 Procedure. The operator shall check the items prescribed on the checklist. It is not the intent of this paragraph to require checking of those items that would require additional personnel (such as electricians) or additional equipment (such as man lifts or fall protection equipment) or safety lockouts. The operator's check shall also include operating the machine without load through all motions; using all controls through a range sufficient to ensure their proper operation; and verifying the proper operation of safety devices, gauges, meters, warning signals, limit switches, and other devices.

9.1.2.1 Specific Instructions. The pre-use check is in four parts and is designed to group the items to be checked in their normal sequence of location or area as they would normally be observed. All items and attributes are keyed to the ODCL. The condition observed shall be indicated on the form. The operator may perform the check from the various groupings in parallel.

9.1.2.1.1 Walk Around Check. The operator shall perform an "on the crane" walk-around check on those cranes equipped with a safe access means. For category 1 and 4 cranes, the walk around check shall be from the ground, inside the machinery house if applicable, the operator's cab, and the walkways and ladders between the ground, machinery house, and operator's cab. The boom may remain in its normal operating range. It is not intended that the boom and A-frame be climbed. For cab operated category 2 and 3 cranes with access ladders and walkways, the check shall be from the ground, the walkways, the cab, and if safe access is provided, the trolley. The operator shall ensure the crane is currently certified. Enter the certification expiration date on the ODCL. If the crane is not currently certified, this condition shall be reported to the supervisor. The check shall include walking around and/or over the exterior of the crane observing anything that is out of order or place. As a minimum, the operator shall observe and report the condition of the following:

a. Safety Guards and Plates. Check for missing safety guards and plates.

b. Carrier Frame and Rotate Base. Check carrier frame and rotate base thoroughly for obvious physical damage, such as cracking, bending, or deformation of plates or welds. Check for cracking or flaking of paint that may indicate a crack or damage in the structure beneath. Check hook rollers, bull gear, and rotate pinion.

c. General Hardware. Check for missing and loose hardware (bolts, nuts, brackets, etc.).

d. Wire Rope. Check wire rope for unusual wear, fraying, birdcaging, corrosion, and kinking. Check end connections where visible, particularly wedge sockets for proper configuration, seating, and condition of wire rope. Check chafing blocks for adequate guidance of lines and excessive wear.

e. Reeving. Check for condition of wire rope or load chain reeving. Ensure wire rope fleet angle has not caused overriding of drum flange. Check to ensure wire rope or load chain is running true in hook block and boom point sheaves. Check to ensure wire rope or load chain is laying correctly on the drum or sprockets.

f. Block. Check condition of block and ensure all swivels rotate freely.

g. Hook. Check condition of hook for cracks, excessive throat opening, or twist. If rigging gear is on the hook and cannot be easily removed, check hook to the maximum extent possible without removing rigging gear.

h. Sheaves or Sprockets. Check, where practical, condition of sheaves or sprockets to determine that they are free to rotate and are not cracked or chipped.

i. Boom and Jib. Check condition of boom and jib for straightness and any evidence of physical damage, such as cracking, bending, or other deformation of the steel elements or welds. When checking lattice booms, be especially watchful for bent lattices and dents in the main chords.

j. Gantry, Pendants, and Boom Stops. Check condition of gantry, pendants, and boom stops. Check gantry for distortion or other damage. Check boom pendants

for sags or other evidence of unequal length and that the anchor pins are set. Check boom stops to ensure they are not damaged and telescoping struts are not jammed.

k. Walkways, Ladders, and Handrails. Check condition of walkways, ladders, and handrails. Look for loose mountings, cracks, excessive rust, loose rungs, or any other signs of unsafe conditions.

l. Windlocks, Stops, and Bumpers. Check for free action of windlocks. Check stops and bumpers on the crane for cracks or other damage.

m. Tires, Wheels, and Tracks. Check condition of tires for inflation, serious cuts, or excessive wear. If lifts on rubber are planned, check tire with gage for proper inflation pressure per OEM load chart. Check wheels to ensure they are not loose or damaged. On track machines, look for excessive slack, broken or loose pads, or any other obvious defects.

n. Leaks. Check for evidence on machine frame and on ground beneath machine, of any leakage of fuel, lubricating oil, hydraulic fluid, or engine coolant.

o. Outriggers and Stabilizers. Check outriggers and stabilizers for damage. If floats or pads are not permanently installed on the outrigger, ensure they are on the carrier and that they are not damaged.

p. Load Chain. Check for damaged or deteriorated links.

q. Area Safety. Check work area and ensure that exact locations of obstacles or hazards are known. Ensure ground conditions are sufficiently firm to support a loaded crane. Verify temporary connections are removed or cleared for operation (e.g., temporary shore power or hotel power).

9.1.2.1.2 Machinery House Check. Enter machinery house and/or remove machinery inspection panels or covers observing the following:

a. Housekeeping. Check to ensure the machinery house and accesses are clean. Ensure tools and authorized materials are properly stored and that waste and debris are removed.

b. Diesel Engine and Generator. Check diesel engine lube oil level, radiator coolant level, hydraulic oil level, and fuel level. Check fan and drive belts for damage. Check for evidence of loose fasteners, oil or grease splashes, and any indications of overheating.

c. Leaks. Check for leaks of lubricating oil, fuel, coolant, hydraulic oil, or grease.

d. Lubrication. Check gear cases for lubricant level and evidence of over or under lubrication of crane components.

e. Battery. Check for excessive corrosion and leakage.

f. Lights. Check that machinery house lights are working.

g. Glass. Check for broken or missing glass in machinery house doors or windows.

h. Clutches and Brakes. Check accessible portions of clutches and brakes for evidence of excessive heat, wear, or grease and oil on the linings. Check for evidence of loose fasteners and for missing or broken parts. If a brake is equipped with a manual release mechanism, check to ensure the mechanism is not in the released position.

i. Electric Motors. Check all motors for evidence of loose fasteners, oil or grease splashes, and any indications of overheating.

j. Auxiliary Engine and Compressor. Check lube oil level, radiator coolant level, hydraulic oil level, and fuel level. Check fan and drive belts for damage. Check for evidence of loose fasteners, oil or grease splashes, and any indication of overheating.

k. Danger/Caution Tags. If danger or caution tags are posted, read, understand, and follow the directions on the tags. Check the appropriate ODCL column as follows: “S” – all tags are properly hung; “U” – tags improperly hung or otherwise deficient; “NA” – no tags.

l. Fire Extinguishers. Ensure fire extinguishers are in place, seals are unbroken, and inspection tags are up to date.

m. Hoist Drum Pawls and Ratchets. Check locking pawls and ratchets**,** where visible**,** for damage, alignment and proper engagement.

9.1.2.1.3 Operator Cab Check. Enter cab and ensure all controls are in the neutral or off position before starting engine. Start engine and check the following:
(Note: Specific sequence will vary with type of crane.)

a. Gauges. Check gauges to ensure none are broken or missing and that they are operating normally.

b. Indicator and Warning Lights. Check indicator and warning lights to ensure none are broken or missing and that applicable indicator and warning lights are lit.

c. Visibility. Check visibility to ensure that all windows and mirrors are clean, unbroken, and that any vandal guards have been removed from windows.

d. Load Rating Charts. Ensure that load rating charts are posted in the operator's cab and that they are legible.

e. List and Trim Indicator (Floating Cranes). Check list and trim indicator to ensure crane is level within tolerances. Ensure both list and trim bubble tubes are in their respective holders and not broken.

f. Boom Angle/Radius Indicator. Check indicator(s) for damage and ensure linkages are connected. When electronic indicators are used, ensure power is supplied.

g. Fire Extinguisher. Ensure fire extinguishers are in place, seals are unbroken, and inspection tags are up to date.

h. Level Indicator (Mobile Cranes). Check level indicator for damage.

i. Danger/Caution Tags. If danger or caution tags are posted, read, understand, and follow the directions on the tags. Check the appropriate ODCL column as follows: “S” – all tags are properly hung; “U” – tags improperly hung or otherwise deficient; “NA” – no tags.

9.1.2.1.4 Operational Check. Warm up engine. When ready to perform operational check, alert rigger and perform the following:

a. Area Safety. Check work area and ensure that exact locations of obstacles or hazards are known. Ensure ground conditions are sufficiently firm to support a loaded crane.

b. Outriggers and Stabilizers. Prior to initial set up, check outriggers and stabilizers to ensure they function freely.

c. Unusual Noises. After starting engine, be alert for unusual noises, fluid leaks, improper functioning, incorrect readings of gauges, and loss of power or bad response to control of the engines or motors.

d. Control Action. Check controls through a range sufficient to ensure that they operate freely and that the corresponding component actuates properly when controls are activated. Check hoist controls through full speed range.

e. Wire Rope or Chain. Check for proper paying-out of the wire rope or chain, that the wire rope or chain and hook blocks do not twist/spin, and that the wire rope or chain is running freely through the sheaves or sprockets and blocks. If the boom and hoist drums or load sprocket are visible from the operator's station, check for proper spooling of the wire rope on/off the drum or chain on/off the load sprocket. After lowering the hooks and the boom for limit switch tests and hook inspections, observe sections of wire rope or chain that may not be visible during the walk around check.

f. Brakes and Clutches. Check brake and clutch actions and ensure they are functioning normally and that there is no slippage, excessive play, or binding. Exercise brakes and clutches to ensure they are dry.

g. Boom Angle/Radius Indicator. Check operation of boom angle and/or radius indicator.

h. Limit Switches. Checking of limit switches shall be performed at slow speed and include each upper hook hoist primary limit switch and the upper and lower boom hoist primary limit switches. (Verifying the operation of the upper and lower boom hoist limit switches is required only during the initial check of the crane each day.) Checking of hook hoist lower limit switches is not required if the hook can be lowered to its lowest possible position (e.g., bottom of drydock being worked at minimum radius) while still maintaining a minimum of two wraps of rope on the hoist drum (three wraps for ungrooved drums). For cranes that do not have the requisite number of wraps, the hook hoist lower limit switch shall be checked where operationally possible, i.e., if the crane is at a location where the limit switch can be checked (where the lower limit switch is not checked during the pre-use check, it shall be checked if the crane is subsequently relocated to a position where it can be checked). For cranes without hoist upper limit switches, do not check hoist overload clutches if so equipped. (See section 10 for specific precautions for these hoists.)

Checking of secondary limit switches is not required unless a specific operation is planned where the primary limit switch will be bypassed. (See section 10 for controlling the bypassing of safety devices.)

i. Emergency Stop (e.g., Power-Off Button). Check the emergency stop. Know its location and ensure it is working properly. If the emergency stop is checked while a motion is in operation, check at slow speed. (Not applicable to diesel engine shutdowns on portal and floating cranes.)

j. Other Operational Safety Devices. Check any other operational safety devices as directed by the activity engineering organization.

k. General Safety Devices. Check general safety devices and ensure they are functioning.

l. Fleeting Sheaves. Check operation of fleeting sheaves, where visible, to ensure they travel freely on the shaft.

9.1.2.1.5 Additional Pre-Use Checks for Floating Cranes, Including Mobile Cranes on Barges, Used in Construction. The means to secure a mobile crane to the barge shall be inspected each shift for wear, corrosion, loose or missing fasteners, and defective welds.

If the floating crane (including mobile cranes on barges) is engaged in construction operations for a period exceeding a month, a documented monthly inspection shall be performed. The inspection shall include the items covered in the pre-use inspection and the following:

a. The vessel/flotation device is not taking on water.

b. The deck load is properly secured.

c. The vessel/flotation device is watertight based on the condition of the chain lockers, storage, fuel compartments, and hatches.

d. The firefighting and lifesaving equipment is in place and functional.

If the floating crane (including mobile cranes used on barges) is to be used in construction operations for a period of one year or longer, the following shall be included in the annual condition inspection of the barge:

e. Cleats, bitts, chocks, fenders, capstans, ladders, and stanchions, for corrosion, wear, deterioration, or deformation that could impair the function of these items.

f. External evidence of leaks and structural damage; evidence of leaks and damage below the waterline may be determined through internal inspection of the barge.

g. Four-corner draft readings.

h. Firefighting equipment for serviceability.

i. Rescue skiffs, lifelines, work vests, life preservers and ring buoys for proper condition.

9.2 Pre-Use Check (Non-Cab Operated Category 3 Cranes).

a. For all cranes, the operator shall perform a pre-use operational check prior to the first use of the crane each day. For cranes used in construction, the check shall be performed prior to each shift the crane is used. The operational check shall ensure that the crane controls, brakes, and limit switches operate properly. Hooks, hook latches, wire rope, and load chains shall be checked for proper condition and wire rope or load chain reeving. This pre-use check need not be documented. Problems found shall be reported to the supervisor.

b. For bridge, wall, and gantry cranes, a documented pre-use check shall be performed at least once each calendar month the crane is in use. The pre-use check shall be in accordance with paragraph 9.1.2**,** except that the pre-use check may be from the ground. The checklist shall be completed and signed by a qualified operator. The operator shall forward the checklist to the supervisor for review.

9.3 Operator-Detected Deficiencies

9.3.1 Load Bearing Parts, Load Controlling Parts, and Operational Safety Devices. When an operator, during the daily check of equipment or during operation, observes a deficiency of a load bearing part, load controlling part, or operational safety device (e.g., an asterisked item on the ODCL); or an operating condition that could result in uncontrolled movement, failure to move as expected from a control input, or otherwise render the crane unsafe, he/she shall immediately secure the crane from further operation and notify the supervisor of the deficiency observed. This includes leaks with greater than normal seepage. The supervisor shall immediately report the crane deficiency to the crane inspection organization for diagnosis of the deficiency and initiation of corrective repair action, including engineering resolution as necessary. The crane (or affected hoist on cranes with multiple hoists) shall not be returned to service until such deficiencies are either corrected or evaluated by the activity engineering organization as satisfactory for continued operation. If there is no activity engineering organization, the inspection organization shall evaluate the deficiency and the certifying official shall approve continued operation. See sections 2 and 3 for requirements for repair, inspection, and certification. The items shall be marked as unsatisfactory. A note in the remarks block shall identify the specific component and describe the unsatisfactory condition. In the case of a known (and tagged) deficiency, the operator shall mark the appropriate block on the ODCL (e.g., “Electric Motors” for an inoperative portal crane travel motor; “Operation” for an out of service hoist) as unsatisfactory and explain in the remarks block that the crane has been determined satisfactory for operation with the restrictions noted. In such cases, the operator would not need to contact his supervisor.

9.3.2 Other Deficiencies. For any other deficiency noted on the ODCL, the item shall be marked as unsatisfactory and the operator shall describe the deficiency in the remarks block. The operator's supervisor shall provide the ODCL to the organization responsible for corrective action. For non-cab operated category 3 cranes, the activity shall prescribe procedures for notification and corrective action.

CRANE OPERATOR'S DAILY CHECK LIST

CRANE NO.	TYPE/CAPACITY	LOCATION	CERTIFICATION EXPIRATION DATE	SHIFT 1	SHIFT 2	SHIFT 3	HOUR METER START	HOUR METER STOP	HRS OPERATED	DATE

OPERATORS

LEGEND
S = SATISFACTORY U = UNSATISFACTORY NA = NOT APPLICABLE

1 WALK AROUND CHECK		S	U	NA	2 MACHINERY HOUSE CHECK		S	U	NA	3 OPERATOR CAB CHECK		S	U	NA	4 OPERATIONAL CHECK		S	U	NA
a	Safety Guards and Plates				a	Housekeeping				a	Gauges				a	Area Safety *			
b	Carrier Frame and Rotate Base *				b	Diesel Engine and Generator *				b	Indicator and Warning Lights				b	Outriggers and Stabilizers *			
c	General Hardware				c	Leaks				c	Visibility *				c	Unusual Noises			
d	Wire Rope *				d	Lubrication				d	Load Rating Charts *				d	Control Action *			
e	Reeving *				e	Battery				e	List/Trim Indicator (Floating Cranes) *				e	Wire Rope or Chain *			
f	Block *				f	Lights				f	Boom Angle/Radius Indicator *				f	Brakes and Clutches *			
g	Hook *				g	Glass				g	Fire Extinguisher				g	Boom Angle/Radius Indicator *			
h	Sheaves or Sprockets *				h	Clutches and Brakes *				h	Level Indicator (Mobile Cranes) *				h	Limit Switches *			
i	Boom and Jib *				i	Electric Motors *				i	Danger/Caution Tags *				i	Emergency Stop *			
j	Gantry, Pendants, and Boom Stops *				j	Auxiliary Engine and Compressor									j	Other Operational Safety Devices *			
k	Walkways, Ladders, and Handrails				k	Danger/Caution Tags *									k	General Safety Devices			
l	Windlocks, Stops, and Bumpers				l	Fire Extinguishers									l	Fleeting Sheaves			
m	Tires, Wheels and Tracks				m	Hoist Drum Pawls and Rachets *													
n	Leaks																		
o	Outriggers and Stabilizers *																		
p	Load Chain *																		
q	Area Safety *																		

INSTRUCTIONS - Check all applicable items indicated, each shift. Suspend all operations immediately when observing an unsatisfactory condition of any item indicated with an asterisk (*) unless the condition has been reviewed and continued operation has been authorized by the activity engineering organization. In addition, suspend operation when any unsafe condition is observed and immediately notify supervisor. For any unsatisfactory item, identify the specific component and describe the deficiency in the "Remarks" block.

SUPERVISOR'S SIGNATURE

DATE

FIRST OPERATOR'S SIGNATURE	OPERATOR'S SIGNATURE	OPERATOR'S SIGNATURE	OPERATOR'S SIGNATURE
DATE	DATE	DATE	DATE

REMARKS

FIGURE 9-1

SECTION 10
OPERATION SAFETY

10.1 Crane Operation Safety Procedures. Crane accidents take a heavy and tragic toll each year in lives, serious injury, and/or property damage. The vast majority of crane accidents are the result of personnel error and can be avoided. Crane operation safety is the result of effective teamwork among operators, riggers, and crane walkers. In most accidents, a team member either performs an unsafe action or fails to perform a required safe action. In a vast majority of cases where team personnel are at fault, it is due to inattention, poor judgment, overconfidence, or haste to get the job done. The sections below prescribe basic crane safety procedures that every crane team member shall thoroughly understand and constantly practice to avoid accidents.

10.1.1 Operational Risk Management. OPNAVINST 3500.39 describes the process of operational risk management (ORM) with the purpose of establishing ORM as an integral part of naval operations, training, and planning in order to optimize operational capability and readiness. The ORM process is intended to be a decision making tool used by people at all levels to anticipate hazards, minimize risk to acceptable levels, and reduce the potential for accidents. One of the objectives of ORM training is to develop sufficient proficiency in applying the process such that ORM becomes an automatic or intuitive part of decision making methodology. The ORM process is applicable to all WHE operations. Activities are encouraged to utilize the methodology of ORM in the planning and preparation of all WHE lifts.

10.2 Crane Team. The crane team consists of the crane operator, rigger-in-charge, crane riggers, and crane walkers, as required. The rigger supervisor shall designate the rigger-in-charge (team leader), crane riggers, and crane walkers. The size of the team will vary to suit the job as determined by the rigger supervisor.

The concept of effective teamwork shall be stressed by management. Team members shall work together to ensure the safety of crane operations. While each member of the team has defined responsibilities, everyone is responsible for recognizing potential problems and making all team members aware of them. Any crane team member shall stop the job any time unsafe conditions are found and report to supervision problems that cannot be resolved by the team.

10.2.1 Responsibilities

10.2.1.1 Rigger-in-Charge. The rigger-in-charge has overall control of the operation including: planning all aspects of the lift; determining the weight of the load to be lifted; establishing the appropriate method of communication with the operator; ensuring the load is properly rigged; ensuring the crane operating envelope remains clear of all obstructions; providing signals to the operator or assigning another rigger or signal person to provide the signals; and conducting the operation in a safe manner. The rigger-in-charge shall coordinate the activities of other crane team members.

10.2.1.2 Crane Rigger. The crane rigger is responsible for carrying out the assignments from the rigger-in-charge or the rigger supervisor, including: assisting the crane operator in performing his pre-use check of the crane; proper gear selection and

inspection prior to use; safe rigging of the load; and keeping the rigger-in-charge informed of questionable conditions associated with the operation.

10.2.1.3 Crane Walker. Crane walker responsibilities include: assisting the rigger and operator in the pre-use check of the crane; and ensuring the safe travel of the crane by observing for potential obstructions, properly aligning crane rail switches, and being in a position to immediately notify the operator to stop operations should a potential problem arise.

10.2.2 Operator Responsibilities. The primary responsibility of the operator is the safe operation of the crane. Operator responsibilities include: performing a pre-use check of the crane at the start of the shift; fully understanding the lift prior to starting, including participating in pre-lift briefings; maintaining communication with the rigger-in-charge or designated rigger throughout the operation; making movements only when given the direction to do so (when such direction is required, e.g., for cab-operated cranes); and refusing to operate the crane when there are concerns about the safety of the operation.

10.2.2.1 Operator Condition. First and perhaps most important, the operator shall, by self-examination, determine whether he/she is physically, mentally, and emotionally fit to operate the machine. The lives of many may be dependent on the operator's actions. If the operator is on medication, he/she shall consult a physician regarding adverse effects. The operator shall ask him/herself daily: Do I feel well? Can I handle the physical tasks of operating? Do I have a clear head and am I thinking and remembering properly? Am I alert? Is my attitude good today? Am I calm, cool, and collected? If an operator cannot honestly answer yes to these questions, operating a crane could be an accident hazard and he/she shall not operate the crane.

10.2.2.2 Understanding the Crane. Generally, crane operators at naval activities are required to operate various types, makes, and models of cranes. The operator shall be thoroughly familiar with the operating characteristics, including posted operational restrictions or limitations, of each type, make, and model of crane that may be operated.

10.2.2.3 Safety Devices. There are many varieties of cranes and safety devices on them. Many safety systems are complex and require thorough training on their operations. This is particularly so on mobile cranes that are often leased or rented for short term use. Activities shall ensure, through training, pre-briefs, spot checks, or performance examination, that operators and supervisors are knowledgeable of the operation of safety systems on assigned cranes. It can not be presumed that knowledge of a system on one crane indicates adequate knowledge on other cranes. Operators shall fully understand that safety devices such as interlocks and limit switches shall not be used as operational controls. They are not a substitute for full attention by the operator to potential hazards. Operators shall be trained to approach limit switches (hoist, rotate, and travel) only at slow speed.

Additionally, each activity shall develop procedures for controlling the bypassing of safety devices. Supervisors shall control the usage of keys for safety device bypassing. Keys shall be removed from the bypass switches when not in use. The keys shall be removed from the crane and shall be retained by the supervisor unless unique activity operations (e.g., operating mobile cranes at remote sites) require that the keys remain on the crane. Where this is not practical or where safety devices may be bypassed by

other means, permission for bypassing/defeating safety devices (except for performance of the operator's pre-operation inspection) shall be obtained from the operator supervisor. This requirement shall be posted in the operator's cab. For mobile and electric cranes that do not provide protection against two-blocking, activities shall develop crane specific procedures designed to minimize the possibility of two-blocking (e.g., prohibiting hoisting when hook block is within 10 feet of contacting the boom or 3 feet from contacting the hoist frame, providing a rigger to watch the hook block when the hook approaches the boom or hoist frame, prohibiting any simultaneous crane movement while hoisting, etc.). Supervisors shall brief operators on the procedures prior to assignment on such cranes.

10.2.2.3.1 Additional Requirements for Operational Safety Devices, General Safety Devices, and Operational Aids for Cranes Used in Construction. The following operational safety devices, general safety devices, and related equipment are required on cranes used in construction operations, unless otherwise specified:

a. A properly working crane level indicator that is either built into the equipment or is available on the equipment. This requirement does not apply to portal cranes, derricks, floating cranes/derricks and land cranes/derricks on barges, pontoons, vessels or other means of flotation.

b. Boom stops, except for derricks and hydraulic booms.

c. Jib stops (if a jib is attached).

d. Equipment with foot pedal brakes shall have locks on the pedals.

e. Hydraulic outrigger jacks and hydraulic stabilizer jacks shall have an integral holding device/check valve.

f. Hydraulic boom luffing and telescoping cylinders shall have an integral holding device.

g. For equipment manufactured after December 16, 1969, a boom hoist limiting device is required. If the equipment was manufactured on or before December 16, 1969, and is not equipped with a boom hoist limiting device, at least one of the following alternative measures is required:

(i) Use a boom angle indicator.

(ii) Clearly mark the boom hoist cable (so that it can easily be seen by the operator) at a point that will give the operator sufficient time to stop the hoist to keep the boom within the minimum allowable radius. In addition, install mirrors or remote video cameras and displays if necessary for the operator to see the mark.

(iii) Clearly mark the boom hoist cable (so that it can easily be seen by a spotter) at a point that will give the spotter sufficient time to signal the operator and have the operator stop the hoist to keep the boom within the minimum allowable radius.

h. Luffing jib limiting device (for cranes with luffing jibs).

i. Telescopic boom cranes manufactured after February 28, 1992, shall be equipped with anti two-block or two-block damage prevention device(s). The device(s) shall prevent such damage at all points where two-blocking could occur.

j. Lattice boom cranes manufactured after February 28, 1992, shall be equipped with anti two-block or two-block damage prevention device(s), or warns the operator in time for the operator to prevent two-blocking. The device shall prevent such damage/failure or provide adequate warning for all points where two-blocking could occur.

k. Articulating boom cranes manufactured after December 31, 1999 equipped with a load hoist shall be equipped with anti two-block or two-block damage prevention device(s). The device(s) shall prevent such damage at all points where two-blocking could occur.

(l) Boom angle or radius indicator readable from the operator's station. (Not required for articulating boom cranes.)

m. Jib angle indicator if the equipment has a luffing jib. (Not required for articulating boom cranes.)

n. Boom length indicator if the equipment has a telescopic boom, except where the rated capacity is independent of the boom length. (Not required for articulating boom cranes.)

o. Equipment manufactured after March 29, 2003 shall have at least one of the following: load weighing device, load moment (or rated capacity) indicator, or load moment (or rated capacity) limiter.

p. Category 2 or 3 cranes used in construction shall have an anti-two block device.

q. A properly working horn that is either built into the equipment or is on the equipment and immediately available to the operator.

r. Cranes on rails shall have rail clamps and rail stops, except for portal cranes.

s. An accessible fire extinguisher shall be provided on the crane.

Operations shall not begin unless all of the devices noted above are in proper working order. If a device stops working properly during operation, the operator shall safely stop operations. If any of the devices are not in proper working order, the equipment shall be removed from service and operation shall not resume until the device is working properly.

10.3 OEM's Operation Manual. Crane operators shall read, thoroughly understand, and comply with all procedures, safety instructions, and precautions in the OEM's operation manual. This also applies to instructors and supervisors in initial checkout of new cranes. Where operating procedures are unavailable from the manufacturer, the activity shall develop and ensure compliance with all procedures necessary for the safe operation of the equipment and attachments. Procedures that change or develop the capacity of the crane (where the original capacity is not available from the manufacturer) shall be submitted to the Navy Crane Center for approval. The OEM's operation manual shall be on the crane and readily available to the operator for all category 1 and 4 cranes. Where instructions provided by the OEM are in conflict with local safety instructions or safety procedures provided in this document, the operator shall refer such conflicts to his supervisor for resolution.

10.3.1 OEM's Supplemental Safety Information. Manufacturers, particularly of mobile cranes, often issue information more current and supplemental to that in the operation manual furnished with a particular crane. Much of the information (although sometimes addressed in service bulletins) pertains to the safe operation of the crane. Activities shall contact the OEM or authorized distributor for supplemental information applicable to their cranes, and, if practical, be added to the OEM's distribution list for such information.

10.4 Lifting Operations. Lifting operations shall be classified into two basic categories, complex lifts and non-complex lifts.

a. Except as noted, lifts of ammunition and explosives (ordnance) are considered to be a category separate from these criteria for complex/non complex lifts. Ordnance lifts have unique procedures and approved ordnance handling equipment that must be utilized. However, lifts of ordnance involving the use of tilt fixtures; lifts of ordnance onto/from ships where binding may occur, such as VLS/CLS operations; and lifts of ordnance as described in subparagraphs 10.4.1(d) through (i) shall be treated as complex lifts. For all ordnance lifts, follow NAVSEA OP-5 in addition to this manual. A pre-lift brief shall be conducted to ensure the roles and responsibilities of the crane team and the ordnance handling team are understood and fully coordinated.

10.4.1 Complex Lifts. These are lifts with a moderate to high level of risk involving:

a. Hazardous materials, e.g., poisons, corrosives, highly volatile substances, etc. This does not include palletized unit loads of ordnance, nor materials such as oxygen, acetylene, propane, diesel fuel, or gasoline in cans, or tanks that are properly secured in racks or stands designed for lifting and transporting by crane.

b. Large and complex geometric shapes.

c. Lifts of personnel.

d. Lifts exceeding 80 percent of the capacity of the crane's hoist (e.g., main hoist, whip hoist) planned for use (lifts exceeding 50 percent of the hoist capacity for a

mobile crane mounted on a barge). For variable rated cranes, this shall be at the maximum anticipated radius planned for use. (Lifts with jib cranes, pillar jib cranes, fixed overhead hoists, and monorails are excluded. Lifts of test weights during maintenance or testing when directed by a qualified load test director are excluded.)

e. Lifts of submerged or partially submerged objects. The following lifts are not considered complex:

Removal of valves, rotors, pipes, etc., from dip tanks for cleaning or coating purposes.

Lifting boats of known weight from the water if the boats are of open design with bilge compartments accessible for visual inspection; the boats have label plates indicating weights; and the boats have pre-determined lifting points established by the OEM or the activity engineering organization.

Lifting submerged or partially submerged objects that meet the following criteria: the object is verified to not contain fluid in pockets and/or voids that is unaccounted for in the weight of the object; the object is verified or known to not be stuck by suction or adhesion by corrosion, marine growth, excessive surface tension, mud, etc.; and the object is verified to be clear of obstructions such as other objects in the water, underwater cables, etc.

f. Multiple crane or multiple hook lifts on the same crane, except for bridge or gantry cranes with hooks coupled together and specifically designed for simultaneous lifting such as jet engine test stand lifting cranes.

g. Lifts of unusually expensive or one-of-a-kind equipment or components.

h. Lifts of constrained or potentially constrained loads (binding condition). See paragraph 10.5

i. Other lifts involving non-routine operations, difficult operations, sensitive equipment, or unusual safety risks.

10.4.1.1 Identification and Procedures. Activities shall identify complex lifts and prepare procedures (including rigging sketches where required) for conducting these lifts. Procedures may be standard written instructions or detailed procedures specific to a lift.

10.4.1.2 Supervisor or Working Leader Review and Oversight. A rigger supervisor, operator supervisor, or a rigging or crane operator working leader (classified as WL) shall review on-site conditions for complex lifts and shall perform a pre-job briefing before each complex lift to ensure all crane team personnel understand the required procedures for the lift. A rigger supervisor, operator supervisor, or working leader shall personally supervise the following lifts:

a. Lifts exceeding 80 percent of the certified capacity of the crane's hoist used for the lift.

b. Multiple hook lifts when the weight of the object being lifted exceeds 80 percent of the certified capacity of any hoist used for the lift (see exception in paragraph 10.4.1.f).

c. Lifts of ordnance involving the use of tilt fixtures.

If the lifts are repetitive in nature, the supervisor or working leader shall be present during the first evolution of the lift with each rigging crew. Subsequent identical lifts by the same crew may be done under the guidance of the rigger-in-charge.

10.4.2 Non-complex Lifts. These lifts are ordinary in nature and do not require supervisory oversight. They may be made at the discretion of a qualified rigger.

10.5 Pre-lift Preparation. Operators and riggers shall understand and comply with the load rating chart posted on the crane. The rigger giving the signals shall be identified and the type(s) of communication to be used shall be established.

To avoid overloading any equipment (e.g., hoist, rigging gear, container, material handling platform) used in a crane lift, the rigger-in-charge shall know or have a reasonable estimate of the weight to be lifted and, if applicable, the maximum radii at which the load will be picked and positioned. If the weight is estimated to exceed 50 percent of the capacity of the hoist (at the maximum anticipated radius if applicable) or 80 percent of the capacity of the rigging gear, platform/skid, below-the-hook lifting device, etc., the weight shall be verified by performing an engineering evaluation or using a local procedure approved by the certifying official or activity engineering organization. Alternatively, a load indicating device shall be used. Where overloading of the crane or rigging is possible due to binding conditions, a portable load indicating device with a readout readily visible to the signal person or RIC shall be used. When a load indicating device is used, an appropriate stop point shall be established and the load indicating device shall be carefully monitored to ensure the stop point is not exceeded. When necessary, chainfalls or other hoisting control means shall be used to avoid sudden overload of the crane or rigging gear. This is a complex lift.

Note: Electrically powered load indicating or other devices used in the vicinity of ammunitions and explosives shall meet the Hazards of Electromagnetic Radiation to Ordnance (HERO) requirements of NAVSEA OP 3565.

For mobile cranes, the following also applies. The operator shall know the boom and jib length and crane configuration, and thoroughly understand and comply with the crane's load rating charts and accompanying notes. When determining the safe maximum working radius for the load to be handled, the crane team shall consider whether the lift will be made over the side, front, or rear (or any combination), and whether operation will be on tires or outriggers/stabilizers. For lifts exceeding 50 percent of the crane's capacity at the maximum anticipated radius planned for use, verify by actual measurement or by operating the crane with an empty hook through the lift evolution and verifying the radii

from the radius indicator. For lifts exceeding 80 percent, verify by actual measurement where possible (i.e., do not rely solely on the crane radius indicator). Ideally, the crane should be positioned equidistant between the pickup and set down points. This will limit the need for changing boom positions. Verify that the load to be lifted is within the crane's allowable loading (including appropriate deductions for hook, block, ancillary equipment, etc.) for all measured radii. Do not exceed these distances during the actual lift. If a load can not be placed where originally intended, verify the radius (and allowable load) of the new set down location prior to landing the load. Periodically, the operator shall compare known weights and measured radii against load and radius indicating devices on the crane to verify the accuracy of the devices. If accuracy is questionable, notify the supervisor.

10.5.1 Equipment Weights and Marking. Man lifts, aerial platform vehicles, forklifts, mobile cranes, and similar equipment that may be lifted by crane shall be weighed and stenciled with the weight in pounds. For activities located in foreign countries, additional marking of the weights in kilograms is acceptable. OEM marked weights are acceptable. Lifting points and/or lifting configurations shall be identified.

Sand hoppers, tubs, platforms, custom designed skids and pallets, and other large containers that may contain material shall be marked with empty and full weights. For containers utilized for trash or scrap, the safe working load may be marked, provided the container is open or accessible to allow the rigger to determine the type and weight of the material placed in the container. Full weights shall be established by the OEM or the activity engineering organization. If the container's weight is not marked, its weight shall be verified by the use of a load indicating device or dynamometer. The load indicating device, dynamometer, rigging gear, and crane shall be sized to pick up the maximum possible weight of the unmarked load. If a marked container cannot be physically verified as empty or the container is only marked with a full weight, the container shall be considered full or a load indicating device shall be used.

10.5.2 Ground Conditions. Cranes shall not be operated or assembled/disassembled unless ground conditions are firm, drained, and graded to a sufficient extent so that, in conjunction with the use of supporting materials (if necessary), the crane manufacturer's specifications for adequate support and degree of level of the crane are met. The activity shall ensure the operator is aware of the location of known hazards in the vicinity of the crane set-up area, such as voids, tanks, and utilities. If the operator determines that ground conditions are unsatisfactory or questionable, work shall not proceed and the activity engineering organization shall be notified for evaluation.

10.6 Communications. Operators and riggers shall understand and use the Standard Hand Signals shown in figures 10-1 and 10-2 for controlling crane operations. Additional signals (if required) shall be approved by operator and rigger supervisors and shall be included in operator and rigger training programs. All hand signals shall be posted in the crane cab in view of the operator. If pickup and lay down areas are not readily accessible by a single rigger, additional riggers shall be assigned as necessary. A positive means of transferring control of the load between riggers shall be used. Direct voice and radio communications are also acceptable.

When making lifts where hand signals are not feasible, the rigger giving the signals shall remain in constant voice communication with the operator. It shall be understood that if the communication ceases, the operator shall stop operation until communication is reestablished.

The device(s) used to transmit voice signals shall be tested on site before beginning operations to ensure that the signal transmission is effective, clear, and reliable. Signal transmission shall be through a dedicated channel, except multiple cranes and one or more signal persons may share a dedicated channel for the purpose of coordinating operations. The operator's reception of signals shall be by a hands-free system.

Voice directions given to the operator shall be given from the operator's directional perspective. Each voice signal shall contain the following elements, given in the following order: function (such as hoist, boom), direction; distance and/or speed; function, stop command.

Note: The operator shall stop the crane at any time and in any situation judged to be unsafe. In addition, the operator shall immediately respond to a direction from any person to stop his/her crane.

10.7 General Operating Precautions. In all operations, the crane operator shall remain alert because the person directing the operation may not see all hazards. The operator shall remain alert to obstructions, people, and the behavior and feel of the machine. Never allow unauthorized personnel in, on, or around the machine when in operation. Dress appropriately, wearing prescribed safety gear. Do not expose any parts of the body to moving machinery.

The operator shall immediately activate the emergency stop function if he or she senses loss of control of the load.

The operator shall remain at the controls at all times while a load is suspended from the crane. This does not include slings and other gear used to rig the load and does not include a load attached to the crane with slack in the rigging gear. This also does not apply to under-running bridge cranes, jib cranes, pillar cranes, pillar jib cranes, monorails, and fixed overhead hoists used in industrial processes that require a suspended load such as cleaning, degreasing, painting, testing, and similar processes. For such cases, the suspended load shall be less than 80 percent of the crane's rated capacity, the area shall be secured to prevent unauthorized personnel from entering, the crane shall be tagged to indicate this condition, and the load shall not be suspended longer than required. Activities shall assess all potential hazards prior to leaving rigging gear on an unattended crane, such as exposure to personnel, weather conditions, proximity of the crane or gear to obstructions, and potential for collisions. Additionally, any gear left on the crane shall not prevent the performance of the operator's pre-use check when required.

Loads shall not be suspended or moved over personnel. When it is necessary, personnel may reach under suspended loads for a short duration to install/remove

coverings, make attachments, position supports, etc., provided the load is not suspended over the employee's head and the only body parts under the load are the arms. Any reaching under the load shall be approved by the rigger-in-charge. The load shall not be in motion while the employee is reaching under the load. Activities shall minimize the occurrence of reaching under suspended loads. Lifts of multiple objects that are one under the other with each object rigged from the previous object shall not be performed. Except for personnel engaged in rigging/unrigging the load or engaged in attaching/removing the load to/from a structure or another component, personnel shall be kept clear of the fall zone (i.e., the area in which it is reasonably foreseeable that partially or completely suspended materials could fall in the event of an accident). Only personnel needed to receive a load are permitted to be within the fall zone when a load is being landed. During a tilt-up or tilt-down operation, only personnel essential to the operation are permitted in the fall zone (but not directly under the load). A person is essential to the operation if the person is conducting one of the following operations and the supervisor can demonstrate it is infeasible for the person to perform that operation from outside the fall zone: physically guide the load; closely monitor and give instructions regarding the load's movement; or either detach it from or initially attach it to another component or structure (such as, but not limited to, making an initial connection or installing bracing).

Initiate and maintain all crane movements slowly and smoothly watching boom movement to prevent boom "kick back". Eliminate rapid acceleration and braking. These actions put dangerous impact loads on the machine and its components. Speed may be hazardous and it reduces the chance to take corrective action. With a loaded wire rope suspended boom or jib close to boom stops, never rapidly relieve boom of load. Wire ropes stretch when loaded and spring back when load is suddenly removed. This can cause boom to kick back into boom stops and damage the boom. In this situation, both the boom hoist and the hook hoist shall be used in setting down the load. Use power lowering whenever possible.

Hooks used on cranes and hoists shall have self-closing latches or the throat opening shall be "moused" (secured with wire, rope, heavy tape, etc.) or otherwise secured to prevent the attached item from coming free of the hook under a slack condition. The following exceptions apply and shall be approved by the activity engineering organization: items where the hook throat is fully obstructed and not available for manual securing and lifts where securing the hook throat increases the danger to personnel such as forge shop or dip tank work.

10.7.1 Work Area Control. To prevent employees from entering an area where an employee could be struck, pinched, or crushed by the crane's rotating superstructure, the crane team shall erect and maintain control lines, warning lines, railings or similar barriers to mark the boundaries of the hazard areas. Before an employee goes to a location in the hazard area that is out of view of the operator, the employee shall ensure that the operator is informed that he/she is going to that location. Where the operator knows that an employee went to a hazardous location, the operator shall not rotate the superstructure until the operator is informed in accordance with a prearranged system

of communication that the employee is in a safe position. Where any part of a crane/derrick is within the working radius of another crane/derrick, the activity shall institute a system to coordinate operations.

10.7.2 Electromagnetic Interference Susceptibility. Electronic equipment on cranes, including control systems and load indicating devices, may be susceptible to electromagnetic interference (EMI), especially when operating near ships' radar or other radio transmitting sources. Activities need to be aware of the EMI environment in the vicinity of crane operations and assess the impact of such environment on potentially susceptible equipment.

10.7.3 Additional Requirements for Assembly/Disassembly (including re-reeving) of Cranes. When assembling or disassembling equipment or attachments, including removable counterweights, for a construction operation, a supervisor or rigger in charge (RIC) shall direct the operation. For a non-construction operation, the requirements of this subparagraph apply, but an operator or rigger may be substituted for the supervisor or RIC.

The supervisor or RIC shall review the applicable procedures immediately prior to the commencement of assembly/disassembly. The supervisor or RIC shall ensure the crew members (including new crew members and crew members reassigned to different tasks) understand their tasks, the hazards associated with their tasks, and the hazardous positions/locations they need to avoid.

Before a crew member goes to a location that is out of view of the operator and is either in, on, or under the equipment, or near the equipment (or load) where the crew member could be injured by movement of the equipment (or load), the crew member shall inform the operator that he/she is going to that location. Where the operator knows that a crew member went to a location noted above, the operator shall not move any part of the equipment (or load) until the operator is informed in accordance with a prearranged system of communication that the crew member is in a safe position.

When pins (or similar devices) are being removed, employees shall not be under the boom, jib, or other components, except where site constraints require one or more employees to be under the boom, jib, or other components when pins (or similar devices) are being removed. In such cases, the supervisor or RIC shall implement procedures that minimize the risk of unintended dangerous movement and minimize the duration and extent of exposure under the boom.

During all phases of assembly/disassembly, the rated capacity of the crane, equipment components (including rigging), lifting lugs, and equipment accessories shall not be exceeded.

10.7.3.1 Potential Hazards. The supervisor or RIC shall address the following potential hazards associated with the operation, including:

a. Site and ground conditions shall be adequate for safe assembly/disassembly operations and to support the equipment during assembly/disassembly.

b. When used to support lattice booms or components, blocking shall be appropriately placed to protect the structural integrity of the equipment and prevent dangerous movement and collapse.

c. The size, amount, condition and method of stacking the blocking shall be sufficient to sustain the loads and maintain stability.

d. When using an assist crane, the loads that will be imposed on the assist crane at each phase of assembly/disassembly shall be verified before assembly/ disassembly begins.

e. The point(s) of attachment of rigging to a boom (or boom sections or jib or jib sections) shall be suitable for preventing structural damage and facilitating safe handling of these components.

f. The center of gravity of the load shall be identified if that is necessary for the method used for maintaining stability. Where there is insufficient information to accurately identify the center of gravity, measures designed to prevent unintended dangerous movement resulting from an inaccurate identification of the center of gravity shall be used.

g. The boom sections, boom suspension systems (such as gantry A-frames and jib struts), and components shall be rigged or supported to maintain stability upon the removal of the pins.

h. Suspension ropes and pendants shall not be allowed to catch on the boom or jib connection pins, cotter pins, keepers, or locking pins.

i. The potential for unintended movement from inadequately supported counterweights and from hoisting counterweights shall be accounted for.

j. Each time reliance is to be placed on the boom hoist brake to prevent boom movement during assembly/disassembly, the brake shall be tested prior to such reliance to determine if it is sufficient to prevent boom movement. If it is not sufficient, a boom hoist pawl, other locking device/back-up braking device, or another method of preventing dangerous movement of the boom (such as blocking or using an assist crane) from a boom hoist brake failure shall be used.

k. Backward stability shall be addressed before swinging the upper works, travel, and when attaching or removing equipment components.

l. The effect of wind speed and weather on the operation shall be accounted for.

m. Manufacturer limitations on the maximum amount of boom supported only by cantilevering shall not be exceeded. Where these are unavailable, contact the Navy Crane Center.

n. The weight of each component shall be readily available.

10.7.3.2 Outrigger/Stabilizer Requirements. When the load to be handled and the operating radius require the use of outriggers or stabilizers, or at any time when outriggers or stabilizers are used, the following requirements shall be met:

a. The outriggers or stabilizers shall be fully extended.

b. When outrigger floats are used, they shall be attached to the outriggers. When stabilizer floats are used, they shall be attached to the stabilizers.

c. Each outrigger or stabilizer shall be visible to the operator or to a signal person during extension and setting.

d. Outrigger and stabilizer blocking shall meet the requirements noted in paragraph 10.7.3.1.b and 10.7.3.1.c, and shall be placed only under the outrigger or stabilizer float/pad of the jack or, where the outrigger or stabilizer is designed without a jack, under the outer bearing surface of the extended outrigger or stabilizer beam.

10.7.3.3 Post-Assembly Inspection Requirements. Upon completion of the assembly, the equipment shall be inspected. Reusable shipping pins, links, straps, and similar equipment shall be removed and stowed or otherwise stored so that they do not present a falling object hazard.

10.7.3.4 Special Requirements for Lattice Boom Assembly/Disassembly. When dismantling boom sections, none of the pins in the pendants shall be removed (partly or completely) when the pendants are in tension. None of the pins (top or bottom) on boom sections located between the pendant attachment points and the crane/derrick body shall be removed (partly or completely) when the pendants are in tension. None of the pins (top or bottom) on boom sections located between the uppermost boom section and the crane/derrick body shall be removed (partly or completely) while the boom is being supported by the uppermost boom section resting on the ground (or other support). None of the top pins on boom sections located on the cantilevered portion of the boom being removed (the portion being removed ahead of the pendant attachment points) shall be removed (partly or completely) until the cantilevered section to be removed is fully supported.

10.7.3.5 Assembly/Disassembly Near Overhead Power Lines. During assembly/disassembly operations, the crane, attachments, load lines, and other equipment shall be positioned so that no part of the crane, attachments, load lines or other equipment could get closer than 20 feet (for power line voltages of 350kV or less) or 50 feet (for power line voltages over 350 kV) to an energized power line. No

assembly/disassembly is allowed below an energized power line at any distance. Assembly/disassembly is allowed inside the above distances or below a power line only when the activity has confirmed that the utility owner has deenergized the power line and the line has been visibly grounded at the worksite.

10.8 Lifting of Personnel. The lifting of personnel by crane shall only be accomplished when no safer method is available. When lifting personnel, the following requirements apply:

a. This is a complex lift as defined above. Each activity shall have written procedures that conform to these requirements. The activity safety office shall approve these procedures.

b. Cranes, rigging gear, and personnel platforms shall conform to OSHA 29 CFR 1926.1431 requirements and ASME B30.23 for the personnel platform.

c. A body harness and shock absorbing lanyard shall be worn and attached to a structural member within the personnel platform capable of supporting the impact from a fall. (Attachment of the lanyard to the load block is not permitted.) The harness and anchorage system shall conform to CFR 1926.502 requirements. When working over or near water where the danger of drowning exists, employees shall be provided with U.S. Coast Guard-approved life jacket or buoyant work vests. Prior to and after each use, the buoyant work vests or life jackets shall be inspected for defects that would alter their strength or buoyancy. Defective units shall not be used. Ring buoys with at least 90 feet of line shall be provided and readily available for emergency rescue operations. The distance between ring buoys shall not exceed 200 feet. At least one lifesaving skiff shall be immediately available at locations where employees are working over or adjacent to water during construction operations.

10.8.1 Personnel Platform Loading. The personnel platform shall not be loaded in excess of its rated load capacity (except during the proof test/trial lift). The number of persons occupying the personnel platform shall not exceed the number required for the work being performed. Personnel platforms shall be used only for personnel, their tools, and the materials necessary to do their work and shall not be used to hoist materials or tools when not hoisting personnel. Materials and tools for use during a personnel lift shall be secured to prevent displacement and shall be evenly distributed within the confines of the platform while the platform is suspended.

10.8.2 Operation. Hoisting of the personnel platform shall be performed in a slow, controlled, cautious manner with no sudden movements of the crane. Operation shall be accomplished using one crane function at a time. Load and boom hoist drum brakes, swing brakes, and locking devices such as pawls or dogs shall be engaged when the occupied personnel platform is in a stationary position. The crane shall be uniformly level within one percent of level grade and located on firm footing. Cranes equipped with outriggers or stabilizers shall have them all fully extended and locked (if locks are provided by the crane OEM) when hoisting personnel. The total weight of the

loaded personnel platform and related rigging shall not exceed 50 percent of the rated capacity for the radius and configuration of the crane. Lift and lowering speeds shall not exceed 100 feet per minute.

10.8.2.1 Trial Lift. A trial lift with the unoccupied personnel platform loaded at least to the anticipated weight to be lifted shall be made from ground level, or any other location where personnel will enter the platform to each location at which the personnel platform is to be hoisted and positioned. This trial lift shall be performed immediately prior to placing personnel on the platform. The operator shall determine that all systems, controls and safety devices are activated and functioning properly; that no interference exists; and that all configurations necessary to reach those work locations will allow the operator to remain under the 50 percent limit of the hoist's rated capacity. Where there is more than one location to be reached from a single set up position, either individual trial lifts for each location, or a single trial lift, in which the platform is moved sequentially to each location, shall be performed; the method selected shall be the same method that will be used to hoist the personnel. For mobile cranes, the trial lift shall be repeated prior to hoisting personnel whenever the crane is moved and set up in a new location or returned to a previously used location. Additionally, the trial lift shall be repeated when the lift route is changed unless the operator determines that the route change is not significant (i.e., the route change would not affect the safety of hoisted personnel). After the trial lift, and just prior to hoisting personnel, the platform shall be hoisted a few inches and inspected to ensure that it is secure and properly balanced. Personnel shall not be hoisted unless the following conditions exist: Hoist ropes shall be free of kinks, multiple part lines shall not be twisted around each other, the primary attachment shall be centered over the platform, and the hoisting system shall be inspected if the load rope is slack to ensure all ropes are properly seated on drums and in sheaves.

A visual inspection of the crane, rigging, personnel platform, and the crane base support or ground shall be conducted immediately after the trial lift to determine whether the testing has exposed any defect or produced any adverse effect upon any component or structure. The hoist rope shall be checked in accordance with section 9. Defects found during inspections that create a safety hazard, shall be corrected before hoisting personnel. Upon completion of the trial lift process, verify the test weight has been removed.

Note: For portal and floating cranes used in shipbuilding, ship repair, or ship breaking, a trial lift is not required if it is determined by the rigger and crane operator supervisors that due to the location and nature of the work assignment the conditions do not exist that warrant a trial lift (e.g., identical lifts made on several consecutive days, with the same operator and other personnel, returning to work after lunch with the same personnel, from the deck of a floating crane on the same day). Trial lifts will be required whenever the crane team deems it necessary to do so for the safety of personnel during the lift.

10.8.2.2 Proof Test. At each job site (e.g., drydock, wharf, pier, building, deck of floating crane, etc.), prior to hoisting employees, the platform and rigging shall be proof tested to 125 percent of the platform's rated load. For the proof test, the platform shall

be lowered by controlled load lowering, stopped, and held in position for a minimum of five minutes with the test load evenly distributed on the platform (this may be done concurrently with the trial lift). Any deficiencies found that create a safety hazard shall be corrected and another proof test shall be conducted. When a personnel platform is moved to a new job site, a proof test is required. Only a trial lift is required when the platform is moved to a new location within a job site where the platform has already been proof tested, provided that no visual damage has occurred during transportation. (This paragraph is not applicable to shipbuilding, ship repair, or ship breaking.) Upon completion of the proof test process, verify the test weight has been removed. A proof test of the personnel platform shall be conducted after any repair or alteration.

10.8.2.3 Lift Safety. A meeting attended by the crane team, personnel to be lifted, and the person responsible for the task to be performed shall be held to review the appropriate procedures to be followed. This meeting shall be conducted prior to the trial lift at each new work location, and shall be repeated for any personnel newly assigned to the operation.

Before personnel exit or enter a hoisted platform that is not landed, the platform shall be secured to the structure where the work is to be performed, unless securing to the structure creates an unsafe situation. Personnel shall keep all parts of the body inside the platform during raising, lowering, and positioning. This provision does not apply to an occupant of the platform performing the duties of a signal person. Tag lines shall be used unless their use creates an unsafe condition. The crane operator shall remain at the controls at all times while the platform is occupied. Hoisting of personnel shall be promptly discontinued upon indication of any dangerous weather conditions or other impending danger. Personnel being hoisted shall remain in continuous sight of and in direct communication with the operator or signal person. In those situations where direct visual contact with the operator is not possible, and the use of a signal person would create a greater hazard for the person, direct communication alone such as by radio may be used. No lifts shall be made on another of the crane's load lines while personnel are suspended on a platform. Traveling the crane while personnel are hoisted is prohibited, except for portal and bridge cranes (portal cranes may travel with the boom in any position with respect to the direction of travel, parallel, perpendicular, etc.). A complete trial run shall be performed to test the route of travel before personnel are allowed to occupy the platform. This trial run can be performed at the same time as the trial lift.

When wind speed (sustained or gusts) exceeds 20 miles per hour at the intended height of the personnel platform, the supervisor shall determine if, in light of the wind conditions, it is safe to perform, or continue with, the lift. If it is not, the lifting operation shall not begin (if already in progress, the lift shall be terminated). For other weather and environmental conditions, the supervisor shall determine if, in light of existing or impending hazardous conditions, it is safe to perform, or continue with, the lift. If it is not, the lifting operation shall not begin (if already in progress, the lift shall be terminated).

During the lift, occupants shall not sit or stand on, or work from, the top or intermediate rail or toe board, or use any other means/device to raise their work height. Occupants shall not pull the platform out of plumb in relation to the hoisting equipment. If the platform is secured to a structure, the operator shall not move the platform until the operator receives confirmation that the platform is freely suspended. Personnel shall not be lifted where any part of the crane, rigging gear, or personnel platform can come within 20 feet of an energized overhead power line up to 350 kV or within 50 feet of an overhead power line over 350 kV.

10.9 Adverse Operating Conditions. When an operator observes an adverse operating condition, he/she shall suspend operations and notify the supervisor for resolution. An adverse operating condition may result from climatic conditions (snow, ice, wind, rain, lightning, etc.), inadequate support conditions (loose soil, outrigger/stabilizer bearing on manhole, etc.), congestion or obstructions; improper or inadequate rigging procedures, or any other situation that the operator feels could result in uncontrolled movement or otherwise render the operation unsafe. Activities shall develop instructions for modifying or suspending operations in adverse weather conditions, including high winds. These instructions for adverse weather conditions shall be posted in the operator's cab. Specified wind speeds for reducing allowable loads and for curtailing operations shall be based on control of the load and OEM recommendations for stability of the equipment during high winds. Activities shall have adequate means for monitoring local weather conditions.

10.9.1 Securing of WHE for Adverse Weather Conditions. When severe adverse weather conditions (snow, ice, wind, rain, lightning, etc.) have the potential to develop, actions shall be taken to preclude damage to WHE. Activities shall develop instructions for securing WHE in adverse weather conditions. Securing of equipment shall be based on OEM recommendations and local technical instructions. For each outdoor rail-mounted crane, activities shall determine the wind forces that will cause the crane to move with the brakes set, and ensure the crane is adequately secured against movement from anticipated wind forces. Materials required to secure WHE, should be identified and readily available.

10.10 Positioning the Crane for Stability. Mobile crane operators are responsible for positioning their machines and outriggers/stabilizers on foundations or supports that are capable of safely supporting the crane, and for complying with any machine capacity down rating due to limits of the foundation or support. The activity facilities engineering organization is responsible for identifying limitations and restrictions for operating mobile cranes on piers, wharves, or other structures. When the crane is so equipped, the operator shall set the outriggers/stabilizers unless there is specific authorization to operate on-rubber. Such authorization shall be posted in the cab with special down rating instructions or load charts. (See section 11.) Ensure compliance with all on-rubber-lifting requirements of the OEM. Whenever practical and as permitted by the OEM, when lifting on-rubber, extend outriggers and maintain minimal clearance (3 to 4 inches) above ground as recommended by the OEM. When lifting on outriggers, the operator shall ensure the outriggers are properly extended, support the entire weight of

the crane, and the crane is level. For cranes with stabilizers, the operator shall set the stabilizers in accordance with the OEM's requirements. The operator shall check the outrigger/stabilizer pads to ensure they have satisfactory ground bearing. When operating at radii where stability is the controlling factor, the operator shall be especially alert. The weight of the load to be lifted and the operating radius shall be accurately determined and shall not exceed those safe capacities posted on the rating chart. See paragraph 10.5 for verifying the radii of the lift. Use of the load chart is required instead of waiting for the crane to feel light. Do not lift in front quadrants (over the carrier cab) between the front two outriggers unless OEM's instruction manual or load chart authorizes such lifts. When lifting a capacity load at maximum allowable radius, ensure load does not swing out of allowable radius.

10.11 Proper Clearance. The crane shall be so positioned at the job site as to provide adequate clearance from all obstructions to any part of the crane in any position that it will operate. Particular attention to counterweight clearance is required. Accessible areas within the swing radius of the rotating superstructure of a crane shall be barricaded to prevent personnel from being struck or crushed by the crane.

10.11.1 Overhead Electrical Transmission Lines. When operating in the vicinity of overhead transmission lines, operators and riggers shall be alert to this special hazard. If any part of the crane (including the fully extended boom of a telescoping boom crane) or load could approach the distances noted in figure 10-3 during a proposed operation, the following steps shall be taken. The preferred alternative is to have the power line de-energized and visibly grounded. For long span lines, lateral movement due to wind shall be considered in assessing whether the minimum clearance should be increased. These rules shall be followed even when the crane is equipped with insulators or sensors for detecting high voltage. This paragraph does not apply to insulated shore power cables.

10.11.1.1 Work Zone. Where the voltage is known to be less than 350kV, the minimum required clearance shall be 20 feet. Where the voltage is known to be greater than 350 kV, the minimum clearance shall be 50 feet.

The work zone shall be defined by either:

a. Demarcating boundaries (such as with flags or a device such as a range limit device or range control warning device) and prohibiting the operator from operating the crane past those boundaries.

b. Defining the work zone as the area 360 degrees around the equipment up to its maximum working radius.

10.11.1.2 Designated Spotter. Where the overhead power line is not de-energized, the supervisor shall conduct a planning meeting with the operator and the other workers who will be in the area of the equipment or load to review the location of the power

line(s), and the steps that will be implemented to prevent encroachment/electrocution. The rigger in charge shall erect and maintain an elevated warning line, barricade, or line of signs, in view of the operator, equipped with flags or similar high-visibility markings, at the line of required clearance. The designated spotter shall:

a. Be equipped with a visual aid to assist in identifying the minimum clearance distance. Examples of a visual aid include, but are not limited to: A clearly visible line painted on the ground; a clearly visible line of stanchions; a set of clearly visible line-of-sight landmarks (such as a fence post behind the dedicated spotter and a building corner ahead of the dedicated spotter).

b. Be positioned to effectively gauge the clearance distance.

c. Where necessary, use equipment that enables the dedicated spotter to communicate directly with the operator.

d. Give timely information to the operator so that the required clearance distance can be maintained.

10.11.1.3 Additional Measures. If the operator is unable to see the elevated warning line, one of the following additional measures shall be used:

a. A proximity alarm set to give the operator sufficient warning to prevent encroachment.

b. A device that automatically warns the operator when to stop movement, such as a range control warning device. Such a device shall be set to give the operator sufficient warning to prevent encroachment.

c. A device that automatically limits range of movement, set to prevent encroachment.

d. An insulated link installed at a point between the end of the load line (or below) and the load.

e. No one shall be permitted to touch the crane or the load unless the above noted designated spotter indicates it is safe to do so. Personnel permitted to touch the crane shall use protective equipment rated for the voltage.

f. Tag lines for load control, when required, shall be of a non-conductive type.

10.11.1.4 Operation Below a Power Line. No part of the equipment, load line, or load is permitted to operate below a power line unless the activity has confirmed that the utility has de-energized and visibly grounded the power line, except for the following:

a. For cranes with non-extensible booms, the uppermost part of the crane with the boom at maximum boom angle would be more than 20 feet below the plane of the power line.

b. For articulating and telescoping boom cranes, the uppermost part of the crane, with the boom in the fully extended position at maximum boom angle, would be more than 20 feet below the plane of the power line.

For voltages greater than 350kV, where “20 feet” is mentioned in (a) and (b) above, the distance “50 feet” shall be substituted.

10.11.1.5 Operations Near Communications Towers. When working near transmitter/communications towers where equipment is close enough for an electrical charge to be induced in the materials to be handled, the transmitter shall be de-energized or the crane shall be provided with an electrical ground. Tag lines shall be non-conductive.

10.11.1.6 Traveling Below a Power Line. Where transiting a crane beneath an energized power line in accordance with figure 10-3, if any part of the crane will get closer than 20 feet to the power line, a dedicated spotter who is in continuous contact with the operator shall:

a. Be positioned to effectively gauge the clearance distance.

b. Where necessary, use equipment that enables the dedicated spotter to communicate directly with the operator.

c. Give timely information to the operator so that the required clearance distance can be maintained.

When traveling at night or in conditions of poor visibility, in addition to the above, the power lines shall be identifiable by illumination or other means to identify them and a safe travel path shall be identified and used.

10.12 Positioning the Boom. Disengage boom hoist pawl (boom dog) if equipped. Ensure there is no side loading on the boom or swinging of the load on lift-off. Never side-load the boom by dragging loads. Use the shortest boom radius practical for maximum stability and capacity. Engage the boom hoist pawl when operation of the boom hoist is not required during a lift evolution. Use caution when lowering the boom and the load line at the same time with a load suspended. This may cause the load to swing out of control or out of stable radius.

10.13 Hoisting and Lowering the Load. For crane hook work, loads shall be lifted vertically only. Side-loads shall not be applied to the hook. Check the load chart for safe load and radius. Upon initial hoisting of the load, the rigger shall signal the operator to stop hoisting when the load becomes completely suspended to ensure the

load is properly balanced and the brake is functioning properly. Operators and riggers shall follow this procedure each time they hoist a load. If the load is not centered correctly or the brakes are not functioning correctly, the operator shall set the load down and cease operations until the deficiency is corrected. If correct, proceed to the height directed by the rigger and await the signal for the next motion. Cranes shall never be used to drag the load. When lowering the load or empty hook, always maintain at least two wraps of wire rope on grooved drums and three wraps on ungrooved drums. Special precautions shall be taken when making lifts out of water. When the load comes out of water, buoyancy is lost and load increases. Also, just as the load leaves the water, the suction can increase the load momentarily. For loads with padeyes attached, loading shall be in the plane of the padeye, unless the activity engineering organization provides guidance for any out of plane loading.

Note: On certain types of mobile boat hoists the hoist drums use a continuous length of wire rope between two hoists. The wire rope shall be equalized (equal amounts of wire rope on each drum) before a lift is made. Follow OEM procedures for equalizing hoist drums (if applicable).

10.14 Rotating the Load. Disengage the swing lock. After hoisting to the height directed by the rigger and upon receiving the signal to rotate, the operator shall begin the rotate very slowly. If the swing brake is found not to be functioning correctly, the operator shall notify the rigger-in-charge who shall direct the operator to land the load at a safe location. If necessary to rotate to a safe location, rotation shall be slow and carefully controlled. After landing the load, secure the crane until the swing brake deficiency is corrected.

10.15 Traveling the Crane. Supervisors shall ensure operators and crane walkers are aware of crane rail travel restrictions for the crane(s) to which they are assigned. Traveling a crane with a suspended load is a hazardous operation. When traveling, always have the boom in the position providing adequate stability in case the load should swing out of radius.

For mobile cranes, the following also apply: Only when permitted by the OEM shall a mobile crane be permitted to travel with a suspended load. On mobile cranes, whenever possible, travel with the boom and load over the rear and parallel with the axis of the crane carrier and with the direction of travel either forward or reverse, with the swing lock/brake engaged. Also, whenever practical and as permitted by the OEM, extend the outriggers and maintain minimal clearance (3 to 4 inches) above the ground. Do not travel truck or cruiser cranes with the load over the side unless specifically permitted by the OEM and authorized by the certifying official. Exceptions and authorizations, with special load limiting and other instructions, shall be posted in the crane. (See section 11.) When traveling, keep loads close to the ground. Avoid sudden starts and stops. Always travel at the slowest possible speed. When traveling with the boom over the side, the travel motion shall be started slowly and smoothly to prevent excessive side loading of the boom. Be sure the ground over which the crane shall travel can support the machine.

10.16 Load Control. Sufficient tag lines shall be used to minimize load swing and rotation unless their use creates a hazard. Properly sized and inspected chainfalls, turnbuckles, or similar equipment may be used to aid in load control where clearances are limited or where precise load control is required.

10.17 Securing the Crane. The procedure for shutdown will vary with different cranes. Consult the OEM's instruction manual or the activity engineering organization. For building cranes, ensure that the lower block is not an obstruction. Additionally, provide sufficient clearance below the upper sheave assembly or trolley/hoist frame so that the subsequent operator performing an ODCL or pre-use check will be able to stop the hoist motion before a two-block event occurs in case the hoist does not operate in the correct direction upon initiation. For mobile cranes, set the crane carrier brake and chock wheels if the crane is on an incline. When moving a truck, cruiser, or crawler crane to and from job sites, secure the hook and block to the carrier frame to prevent them from swinging into the boom. When securing the hook block, raise it just enough to take up the slack. Do not over tighten. A weak link connection shall be used to secure the hook block to the crane. The breaking strength of the connecting piece shall be less than the rated load of the hook block's wire rope as reeved. When securing the hook blocks for highway travel, add a back up (stronger) tie-back to prevent free swinging in the event of weak link failure. Ensure there are adequate clearances. Complete the ODCL and turn it in to the supervisor.

10.18 Special Requirements for Operation of Multi-Purpose Machines, Material Handling Equipment (Forklifts), and Construction Equipment When Configured as Cranes to Lift Loads Suspended by Rigging Equipment. When using a multi-purpose machine configured as a crane for lifting suspended loads, activities shall ensure the machine is authorized by the OEM to make suspended load lifts. Ensure the equipment is equipped with a capacity chart. Operators shall be licensed in accordance with NAVSUP P-538 and shall be trained to make such lifts. Suspended load lifts with multi-purpose machines shall be treated as complex lifts if the loads meet the criteria of paragraph 10.4.1. Lifts of personnel in a suspended platform with these machines is prohibited.

When using material handling equipment and construction equipment to lift suspended loads, ensure the equipment OEM permits such lifts to be made, that the equipment is properly configured to make such lifts, and that such lifts are made in accordance with OEM requirements. Lift capacity shall be posted on the equipment.

STANDARD HAND SIGNALS FOR CONTROLLING CRANE OPERATIONS.

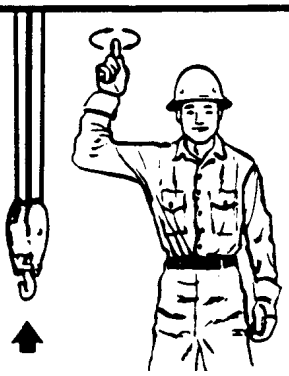

HOIST. With forearm vertical, forefinger pointing up, move hand in small horizontal circle.

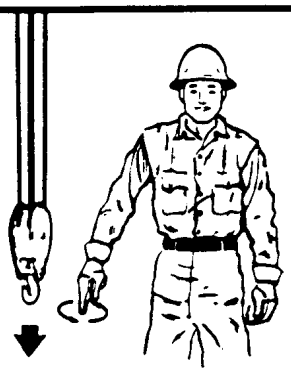

LOWER. With arm extended downward, forefinger pointing down, move hand in small horizontal circle.

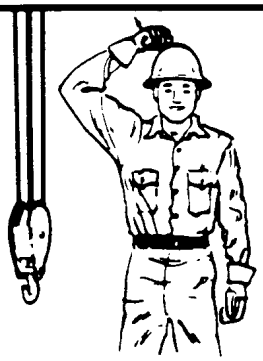

USE MAIN HOIST. Tap fist on head; then use regular signals.

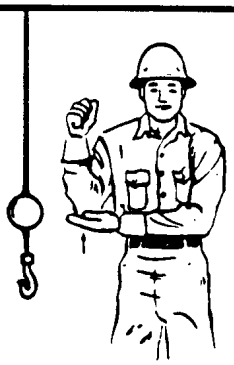

USE WHIP LINE (Auxiliary Hoist). Tap elbow with one hand; then use regular signals.

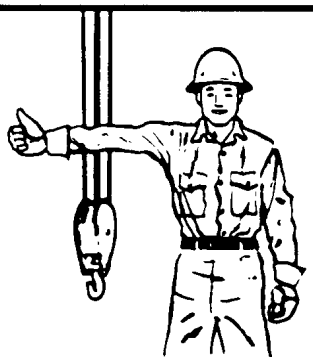

RAISE BOOM. Arm extended, fingers closed, thumb pointing upward.

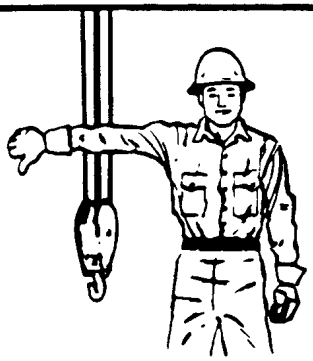

LOWER BOOM. Arm extended, fingers closed, thumb pointing downward.

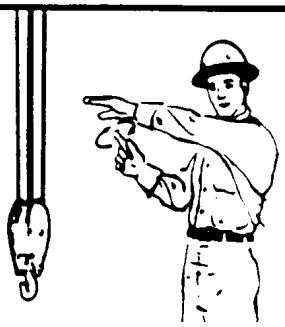

MOVE SLOWLY. Use one hand to give any motion signal and place other hand motionless in front of hand giving the motion signal. (Hoist slowly shown as example.)

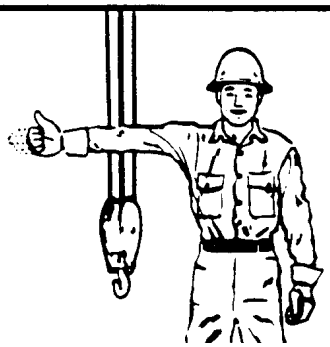

RAISE THE BOOM AND LOWER THE LOAD. With arm extended, thumb pointing up, flex fingers in and out as long as load movement is desired.

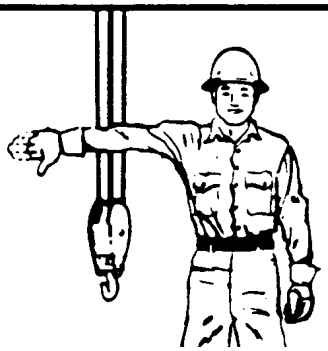

LOWER THE BOOM AND RAISE THE LOAD. With arm extended, thumb pointing down, flex fingers in and out as long as load movement is desired.

FIGURE 10-1 (1 of 3)

STANDARD HAND SIGNALS FOR CONTROLLING CRANE OPERATIONS (cont'd).

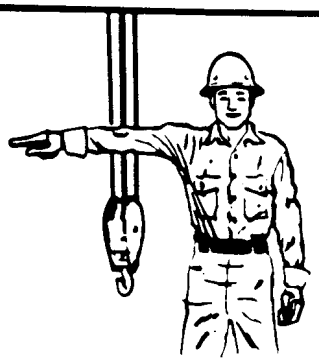

SWING. Arm extended, point with finger in direction of swing of boom.

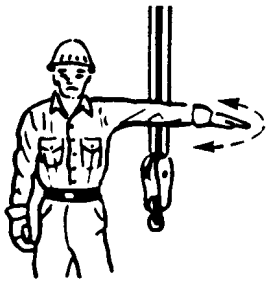

STOP. Arm extended, palm down, move arm back and forth horizontally.

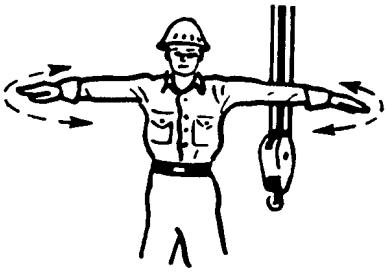

EMERGENCY STOP. Both arms extended, palms down, move arms back and forth horizontally.

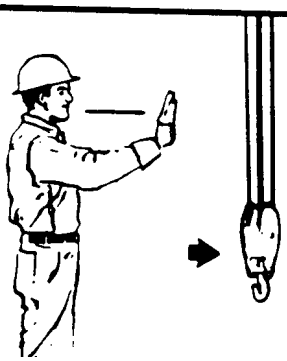

TRAVEL. Arm extended forward, hand open and slightly raised, make pushing motion in direction of travel.

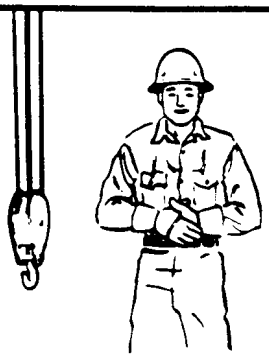

DOG EVERYTHING. Clasp hands in front of body.

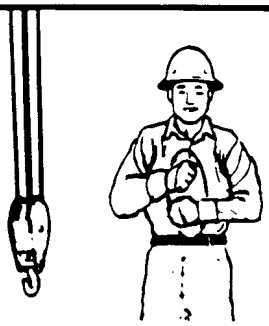

TRAVEL. (Both Tracks) Use both fists in front of body, making a circular motion about each other, indicating direction of travel, forward or backward. (For land cranes only.)

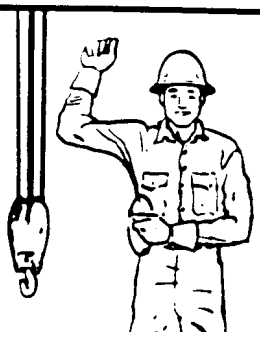

TRAVEL. (One Track) Lock the track on side indicated by raised fist. Travel opposite track in direction indicated by circular motion of other fist, rotated vertically in front of body. *For land cranes only.)

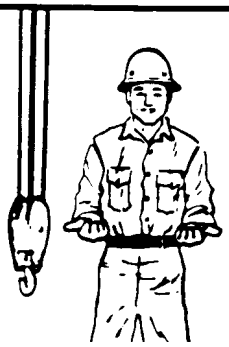

EXTEND BOOM. (Telescoping Booms). Both fists in front of body with thumbs pointing outward.

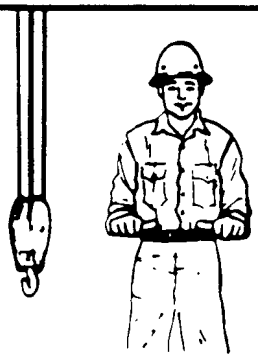

RETRACT BOOM (Telescoping Booms). Both fists in front of body with thumbs pointing toward each other.

FIGURE 10-1 (2 of 3)

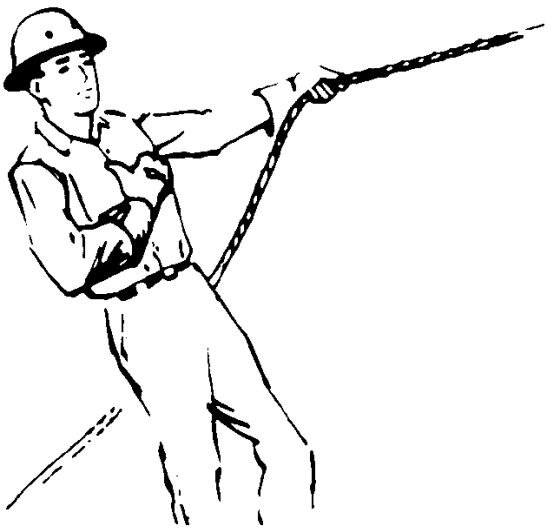

EXTEND BOOM (Telescoping Boom). One Hand Signal. One fist in front of chest with thumb tapping chest.

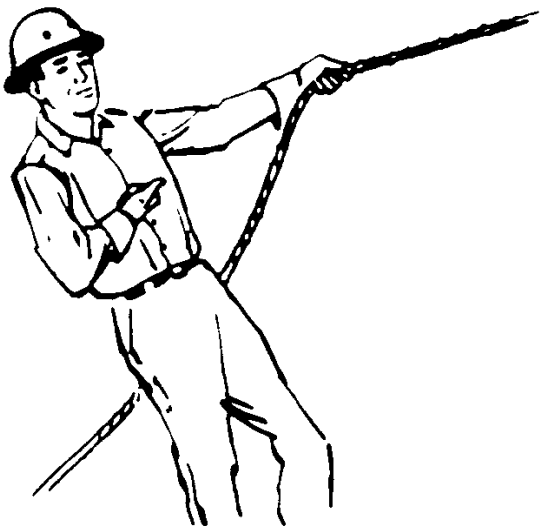

RETRACT BOOM (Telescoping Boom). One Hand Signal. One fist in front of chest, thumb pointing outward and heel of fist tapping chest.

FIGURE 10-1 (3 of 3)

STANDARD HAND SIGNALS FOR CONTROLLING
OVERHEAD AND GANTRY CRANES.

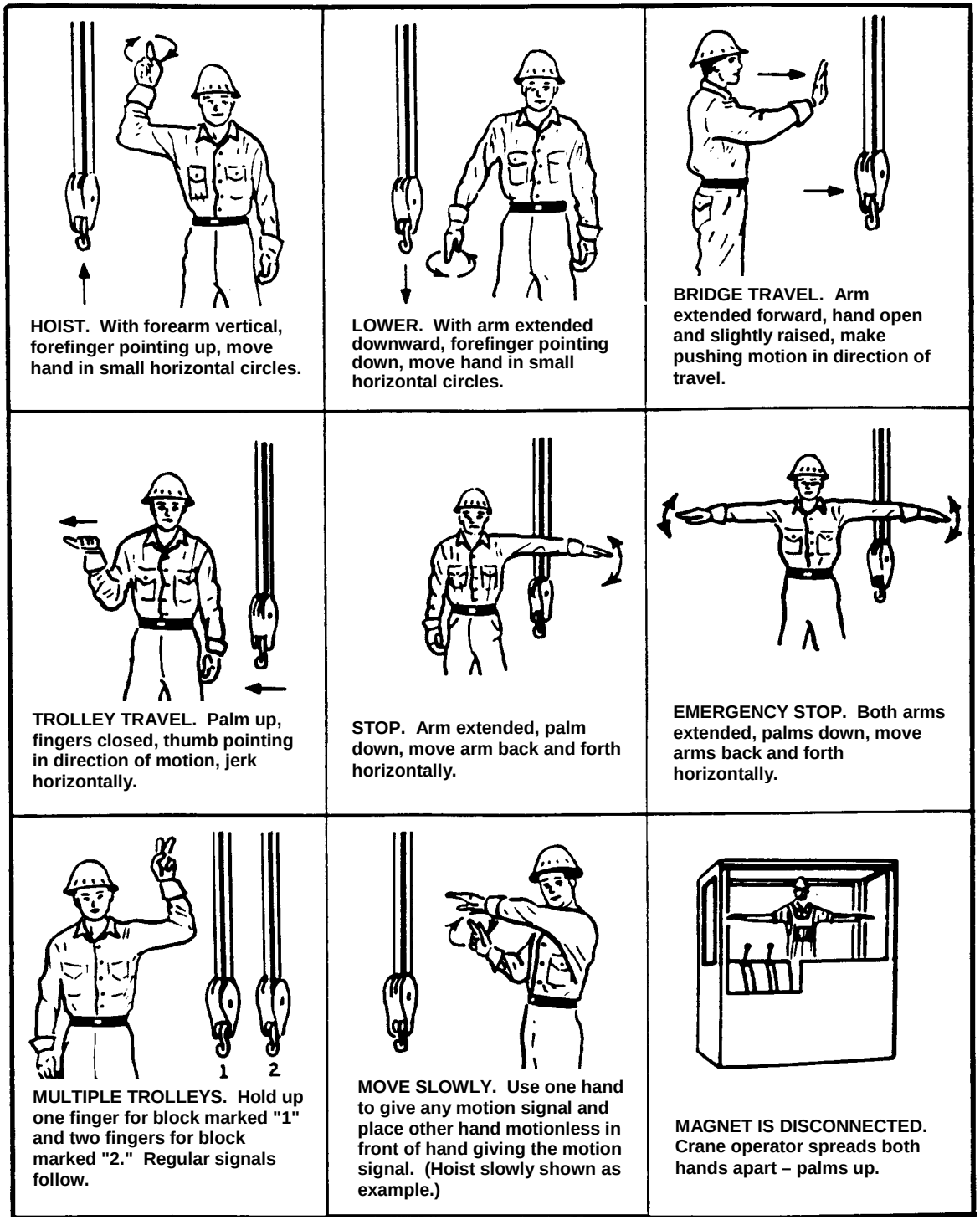

HOIST. With forearm vertical, forefinger pointing up, move hand in small horizontal circles.

LOWER. With arm extended downward, forefinger pointing down, move hand in small horizontal circles.

BRIDGE TRAVEL. Arm extended forward, hand open and slightly raised, make pushing motion in direction of travel.

TROLLEY TRAVEL. Palm up, fingers closed, thumb pointing in direction of motion, jerk horizontally.

STOP. Arm extended, palm down, move arm back and forth horizontally.

EMERGENCY STOP. Both arms extended, palms down, move arms back and forth horizontally.

MULTIPLE TROLLEYS. Hold up one finger for block marked "1" and two fingers for block marked "2." Regular signals follow.

MOVE SLOWLY. Use one hand to give any motion signal and place other hand motionless in front of hand giving the motion signal. (Hoist slowly shown as example.)

MAGNET IS DISCONNECTED. Crane operator spreads both hands apart – palms up.

FIGURE 10-2

DANGER ZONE FOR CRANES AND LIFTED LOADS
OPERATING NEAR ELECTRICAL TRANSMISSION LINES.

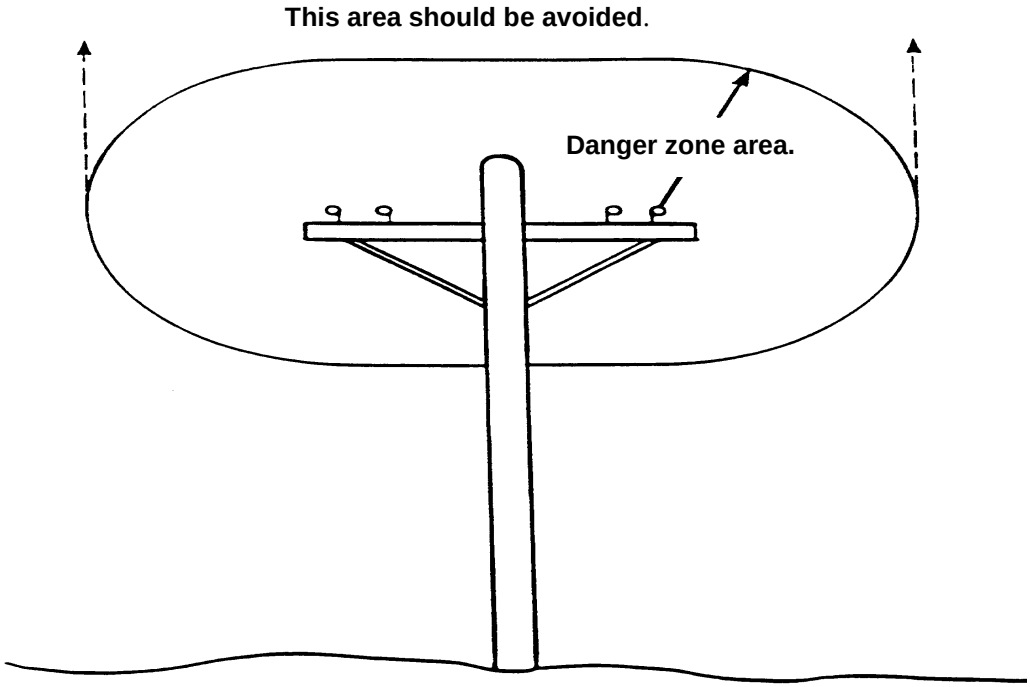

Required clearance for normal voltage in operation near high voltage power lines and operation in transit with no load and boom or mast lowered.

NORMAL VOLTAGE, KV (PHASE TO PHASE)	MINIMUM REQUIRED CLEARANCE, FT (M)
Operation Near High Voltage Power Lines	
0 to 50	20 (6.10)
Over 50 to 200	20 (6.10)
Over 200 to 350	20 (6.10)
Over 350 to 500	50 (15.24)
Over 500 to 750	50 (15.24)
Over 750 to 1000	50 (15.24)
Operation in Transit with No Load and Boom or Mast Lowered	
0 to 0.75	4 (1.22)
Over 0.75 to 50	6 (1.83)
Over 50 to 345	10 (3.05)
Over 345 to 750	16 (4.87)
Over 750 to 1000	20 (6.10)

FIGURE 10-3

CHANGE 1 March 2011

SECTION 11
ADDITIONAL REQUIREMENTS

11.1 Capacity Ratings/Limitations and Crane Identification. Each crane shall be marked with its capacity rating(s), in pounds, visible to the operator. In foreign countries, additional capacity ratings in kilograms are acceptable. Where the crane is not certified for all OEM configurations (e.g., a mobile crane capable of, but not certified for, lifting on rubber), operational limitations and restrictions shall be posted on the crane. The capacity ratings and test loads recorded on the Certification of Load Test and Condition Inspection shall be expressed in pounds. For multiple cranes in a building, each crane shall have a unique identification marked on it, which shall be visible from the floor. For multiple trolleys on a bridge structure or track system, the bridge structure or track system shall be marked with its maximum capacity in pounds.

11.2 Stability Testing and Calibration (Used and Altered Cranes). All newly acquired used locomotive, truck, cruiser, crash, commercial truck mounted, articulating boom, and crawler cranes shall be initially tested for stability in those cases where the OEM's load and stability data are not available or where the acquiring activity suspects that previously performed alterations may affect stability. In addition, a crane shall be tested for stability after alterations that significantly affect the stability of the crane. The activity engineering organization shall determine if a stability test is required after a crane alteration. The stability test and rating shall be conducted as follows.

11.2.1 Margin of Stability. The margin of stability for determination of load ratings, with booms of stipulated lengths at stipulated working radii for the various types of crane mountings, is established by taking a percentage of the load that will produce a condition of balance with the boom in the least stable direction relative to the mounting. Crane load ratings shall not exceed the percentages in table 11-1 under the conditions stipulated in paragraphs 11.2.2 and 11.2.3.

11.2.2 Locomotive Cranes. The following stipulations shall govern the application of the values in table 11-1.

11.2.2.1 Tipping. Tipping with or without the use of outriggers occurs when half of the wheels farthest from the load leave the rail.

Note: As a precaution while testing for free ratings, outriggers shall be loosely applied. Rail clamps shall not be used.

11.2.2.2 Level Ground. The crane shall be standing on track that is level within one percent grade.

11.2.3 Truck, Cruiser, and Crawler Cranes. Determination of balance point loads shall be in accordance with SAE J765, Crane Load Stability Test Code.

Note: See "LIMITATIONS" in SAE J765 prior to performing the stability test.

TABLE 11-1
Load Ratings for Various Types of Mountings
(Used and Altered Cranes)

Type of Crane Mounting	Maximum Load Ratings (Percent of Balance Point Load)
Locomotive without outriggers/stabilizers	
Booms 60 feet or less	85
Booms over 60 feet	85[1]
Locomotive using outriggers / stabilizers fully extended	80
Crawler without outriggers	75
Crawler using outriggers fully extended	85
Truck and wheel-mounted without outriggers / stabilizers	75
Truck and wheel-mounted using outriggers / stabilizers fully extended	85
Truck and wheel-mounted with outriggers, outriggers not extended	
Over the front or rear [2]	75
Over the side [3]	50

[1]Unless this results in less than 30,000 pound-feet net stabilizing moment about the rail, which shall be the minimum with such booms.
[2]On those cranes where the OEM specifies a free rated over the front or rear capacity.
[3]On those cranes where the OEM specifies a free rated over the side capacity.

11.2.4 Balance Point Loads. Balance point loads from which ratings are determined shall be established under static conditions only, i.e., without dynamic effect of hoisting, lowering, or swinging. The OEM's criteria for determination of the "balance point" shall be used. When OEM criteria are not available, the balance point for cranes with outriggers or stabilizers extended shall be the point where the outrigger or stabilizer arm floats within the ground pad connection or, with a permanently attached ground pad, when the pad lifts off the ground surface; or in the case of horizontal extending outrigger beams, when the fixed outrigger housing lifts off the top surface of the extendable outrigger beam.

11.2.5 Rated Capacity. For mobile cranes, the rated capacity includes the weight of (or deduction values for) the hook, block, slings, and ancillary lifting devices (and for some cranes hoist wire rope not accounted for in load charts). Follow OEM load chart instructions for weight deduction values.

11.2.6 Other Stability Factors. The effectiveness of these preceding stability factors will be influenced by such additional factors as freely suspended loads, track, wind or ground conditions, condition and inflation of rubber tires, boom lengths, proper operating speeds for existing conditions, and, in general, careful and competent operation. The user shall take all of these into account.

11.3 Over the Side Lifting Limitation (For mobile cranes equipped with outriggers). For cranes where the OEM permits lifts over the side without the use of outriggers (on tires), the certifying official shall approve the capacity. Capacity shall not exceed 60 percent of the OEM's load chart values or, if a stability test is performed in accordance with SAE J765, 50 percent of the balance point loads.

11.4 Wire Rope End Connections. End connections on wire rope shall be limited to the following and subject to the further limitations prescribed herein.

11.4.1 Poured Socket End Connections. Poured spelter (i.e., molten zinc) and resin end connections using forged and cast steel sockets are approved for all cranes. Speltered socket end connections shall be fabricated in accordance with Naval Ships' Technical Manual S9086-UU-STM-010 Chapter 613, Wire and Fiber Rope and Rigging. Resin socket end connections shall be fabricated in accordance with resin OEM's instructions. Resin sockets shall not be used at operating temperatures that exceed OEM's recommendations. Contact Navy Crane Center (Code 03) for a list of approved resins. The installed socket connection shall be inspected and load tested. The proof test for the installed socket shall be the appendix E load test for the crane (an additional 200 percent of wire rope capacity off-crane pull test is allowed).

11.4.2 Swaged Connections. Swaged end connections are approved for use as wire rope terminal end connections on non rotation-resistant wire rope for all cranes. For rotation resistant wire rope, swage sockets shall be approved by crane alterations in accordance with section 4 or by Standing Crane Alteration. All swaged end connections shall be steel. Swaged connections shall be fabricated on a swage press designed for such purposes, using procedures and parts approved by the swage press OEM. This includes destructive testing of sample rope assemblies if recommended by the swage and/or wire rope manufacturer. The installed swaged connections shall be inspected and load tested. The proof test for the installed end connection shall be the appendix E load test for the crane (an additional 200 percent of wire rope capacity off-crane pull test is allowed).

11.4.3 Wedge Sockets. Wedge socket end connections may be used on mobile and locomotive cranes. Wedge socket end connections shall not be used on non-mobile cranes (portal, gantry, bridge, hammerhead, floating cranes, etc.). See exception, paragraph 11.4.4.

11.4.3.1 Special Precautions Pertaining To The Use of Wedge Socket Connections

a. Wedge sockets develop only 70 to 80 percent of the breaking strength of the wire rope due to the crushing action of the wedge. Extreme caution shall be exercised when wedge socket connections are used in making rated capacity lifts.

b. Wedge sockets are particularly subject to wear, faulty component fit, and damage from frequent change outs. They are also highly vulnerable to inadvertent wedge release and disassembly in two-blocking situations. When wedge sockets are used, care shall be taken to avoid accidental slackening of the wire rope releasing the wedge inside the socket.

c. Single saddle wire rope clips that clamp both the dead end and live rope shall not be used in conjunction with a wedge socket. Such connectors are hazardous in that they restrain the wedge from seating properly in the socket and may damage the rope. Double saddle clips specifically designed for wedge sockets and wedge socket proprietary clip designs may be used.

d. Wedge sockets shall be installed in accordance with the following procedures:

(1) Follow wire rope and socket OEM's requirements for seizing the rope prior to cutting and for securing the cut end prior to inserting in the socket. This is particularly important for rotation resistant wire rope to prevent core slippage or loss of rope lay.

(2) Caution shall be exercised in installing the wedge socket properly to ensure that the wire rope carrying the load is in direct alignment with eye of the socket clevis pin so the load pull is direct. (See figure 11-1.)

(3) Place socket in upright position and bring the rope around in a large, easy to handle hoop. Extend the dead end of the wire rope from the socket a sufficient distance to secure the dead end in either of the ways shown in figure 11-1. Minimum tail length extending from the wedge socket shall be in accordance with the socket OEM's guidelines. (Note: Tail lengths for rotation resistant wire rope are normally greater than for standard 6 to 8 strand wire rope.) Insert wedge into the socket permitting the rope to adjust around the wedge. Wedges shall not be interchanged between different OEM's sockets, models, or sizes.

(4) Carefully take a strain on the live side of the rope to ensure proper initial seating of wedge. Increase load gradually until wedge is fully seated, continue increasing load until applied load is 95-100 percent of capacity (this is a critical lift). Avoid applying any sudden shock loads.

(5) Secure the dead end as shown in figure 11-1. Alternatively, double saddle clips specifically designed for wedge sockets and special wedge sockets specifically designed for use with single saddle clips may be used. Consult the clip manufacturer or activity engineering organization before using wire rope clips on plastic coated or plastic impregnated wire rope.

11.4.4 Other End Connections and Exceptions. The OEM's design configuration for dead end connection devices at the hoist drums are acceptable as originally installed and for replacement. The OEM's design configuration for dead end connections on the hoist block and frame of category 3 cranes (air, electric, hydraulic), mobile boat hoists, and section 14 portable hoists, are acceptable as originally installed and for replacement with the exception of swaged connections on rotation resistant rope.

11.5 Load Shutdown Devices. Category 1 and 4 mobile cranes shall have their adjustable independent load shutdown devices set using SAE J-159 as a guide (not more

than 105 percent of rated capacity). For all other cranes, adjustable independent load shutdown devices shall be set at less than 131.25 percent of the crane's capacity (115.5 percent for mobile boat hoists and rubber-tired gantry cranes). Non-adjustable devices shall shutdown as specified by the device and/or crane OEM. The percentage of crane capacity that the device is set at shall be documented in the equipment history file.

11.6 Boom Length Indicator (Telescoping Boom Cranes). If a crane does not have a boom length indicator in the cab, mark the boom to indicate lengths associated with the OEM's load chart.

DEAD ENDING ROPE IN A SOCKET

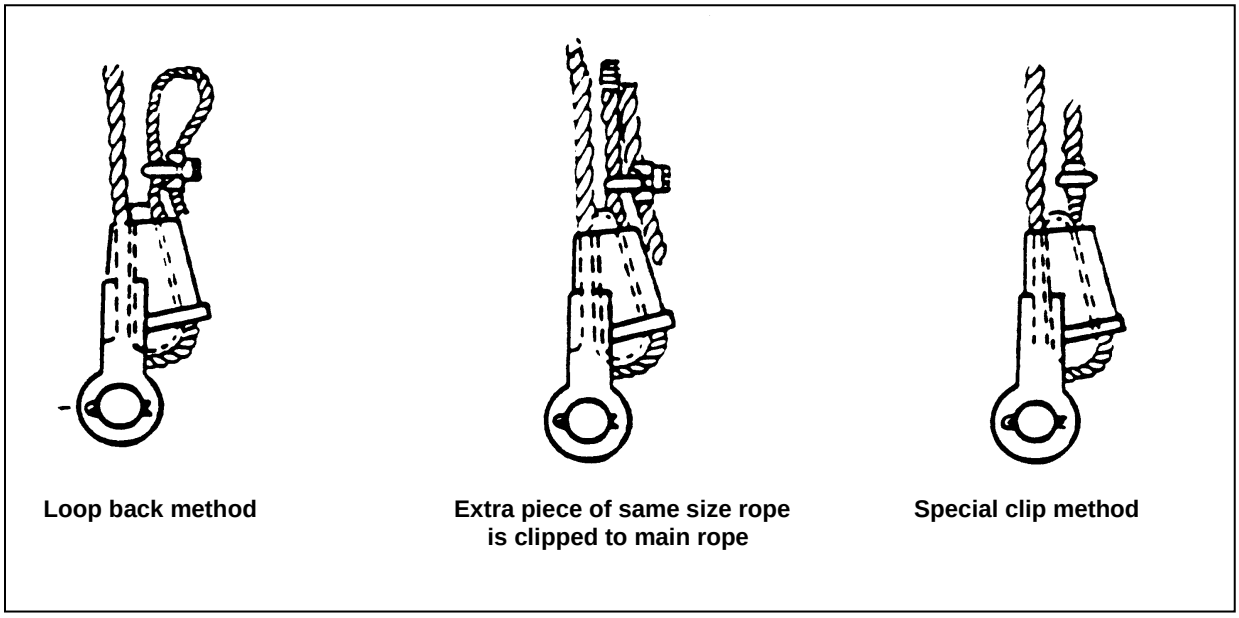

FIGURE 11-1

11.7 Lockout/Tagout and Equipment Tagging Procedures. Activities shall develop written lockout/tagout procedures to ensure the control of hazardous energy during servicing and maintenance of WHE. Lockout/tagout procedures shall conform to OPNAVINST 5100.23 and shall have the concurrence of the activity safety office. Additionally, procedures shall be developed for tagging WHE that have known deficiencies that may adversely affect their safe operation and equipment that is out of certification.

11.8 Crane Safety Advisories, Safety Messages and Equipment Deficiency Memoranda. The Navy Crane Center receives reports of equipment deficiencies, component failures, crane and rigging gear accidents, and other potentially unsafe conditions and practices. When applicable to activities other than the reporting activity, the Navy Crane Center will issue a Crane Safety Advisory (CSA), a Safety Message, or an Equipment Deficiency Memorandum (EDM). Generally, a CSA is directive and often requires feedback from the activities receiving the advisory. An EDM is provided for information and can include deficiencies to non-load bearing/load controlling parts. A

Safety Message may or may not be directive and provides specific and general weight handling equipment safety information.

For each applicable CSA and Safety Message issued by the Navy Crane Center, activities shall perform the corrective actions, tests, inspections, measurements, etc., and report to the Navy Crane Center as directed. Activities shall track corrective actions associated with CSAs and Safety Messages. A list of all CSAs, Safety Messages, and EDMs in effect can be obtained from the Navy Crane Center website, https://portal.navfac.navy.mil/ncc.

SECTION 12
INVESTIGATION AND REPORTING OF CRANE AND RIGGING GEAR ACCIDENTS

12.1 General. In addition to the investigation and reporting requirements of OPNAV Instructions 5102.1 and 5100.23, activities shall investigate and report accidents in accordance with this section. There are two general categories of accidents as defined below. Crane accidents are those that occur during operation of a category 1, 2, 3, or 4 crane. Rigging gear accidents are those that occur when gear covered by section 14 is used by itself in weight handling operation, i.e., without category 1 through 4 cranes, or when covered gear is used with multi-purpose machines, material handling equipment, (e.g., forklifts) and with equipment covered by NAVFAC P-300 in a weight handling operation.

12.2 Crane Accidents.

For the purpose of this definition, it is assumed there is an "operating envelope" around any crane, and inside the envelope are the following elements:

a. The crane.

b. The operator.

c. The riggers and crane walker.

d. Other personnel involved in the operation (supervisor, mechanic, tag line handler, engineer, etc.).

e. The rigging gear between the hook and the load.

f. The load.

g. The crane's supporting structure (ground, rail, etc.).

h. The lift procedure.

12.2.1 Definition. A crane accident occurs when any of the elements in the operating envelope fails to perform correctly during operation, including operation during maintenance or testing resulting in the following:

a. Personnel injury or death. Minor injuries that are inherent in any industrial operation, including strains and repetitive motion related injuries, shall be reported by the normal personnel injury reporting process of the activity in lieu of these requirements.

b. Material or equipment damage.

c. Dropped load.

d. Derailment.

e. Two-blocking.

f. Overload. (This includes load tests when the test load tolerance is exceeded.)

g. Collision: unplanned contact between the load, crane, and/or other objects.

A component failure (e.g., motor burnout, gear tooth failure, bearing failure) is not considered an accident solely due to material or equipment damage unless the component failure results in damage to other components (e.g., dropped boom, dropped load, roll over, etc.). Items c, d, e, f, and g are considered accidents even though no material damage or injury occurs.

12.2.2 Exception. If a crane is used as an anchor point for a portable hoist/rigging gear, a rigging gear accident as defined in paragraph 12.3 below is not considered a crane accident if the crane is not being operated (no functions are in motion) at the time of the rigging gear accident, unless the accident results in an overload or damage to the crane, in which case it shall be reported as a crane accident.

12.3 Rigging Gear Accidents. For the purpose of this definition, it is assumed there is an "operating envelope" around any weight handling operation, and inside the envelope are the following:

a. Rigging gear and miscellaneous equipment covered by section 14.

b. The user of the gear or equipment.

c. Other personnel involved in the operation (supervisor, mechanic, tag line handler, etc.).

d. The load.

e. The gear or equipment's supporting structure.

f. The load's rigging path.

g. The rigging procedure.

12.3.1 Definition. A rigging gear accident occurs when any of the elements in the operating envelope fails to perform correctly during weight handling operations resulting in the following:

a. Personnel injury or death. Minor injuries that are inherent in any industrial operation, including strains and repetitive motion related injuries, shall be reported by the normal personnel injury reporting process of the activity in lieu of these requirements.

b. Material or equipment damage that requires the damaged item to be repaired because it can no longer perform its intended function. This does not include superficial damage such as scratched paint, damaged lagging, or normal wear on rigging gear.

c. Dropped load.

d. Two-blocking of cranes and powered hoists covered by section 14.

e. Overload. (This includes load tests when the test load tolerance is exceeded.)

A component failure (e.g., motor burnout, gear tooth failure, bearing failure) is not considered an accident solely due to material or equipment damage unless the component failure results in damage to other components (e.g., dropped load, damaged load, etc.). Items c, d, and e are considered accidents even though no material damage or injury occurs.

12.4 Action. Upon having an accident or having seen evidence of damage (suspected accident), the crane team, riggers, equipment users, etc., shall stop all operations and notify immediate supervisor(s). If there is impending danger to the equipment or personnel, place the crane and/or load in a safe position prior to notifying supervision. Ensure the accident scene is secured and undisturbed so as to facilitate the investigation. The supervisor shall review the situation and take any further emergency action, including stopping production work or other operations that could aggravate the situation. The supervisor shall notify management personnel as well as the activity safety office.

12.4.1 Initial Notification. Notify the Navy Crane Center (Code 07) by fax (757-967-3808), phone, or e-mail (nfsh_ncc_accident@navy.mil) as soon as practical but not later than 24 hours after an accident involving a fatality, in-patient hospitalization, overturned crane, collapsed boom, or any other major damage to the crane, load, or adjacent property. For all other accidents, notify the Navy Crane Center as soon as practical but no later than three working days after the accident. If notification is by fax or e-mail, provide a point of contact for additional information.

12.4.2 Investigation and Reporting. For each suspected accident, activities shall promptly perform a comprehensive investigation. Activities shall prepare a Crane and Rigging Gear Accident Report, figure 12-1, and forward a copy to the Navy Crane Center (Code 07) within 30 days of the accident. The activity that is responsible for the weight handling operation at the time of the accident shall initiate and submit the accident report. If the crane or rigging gear is owned by another activity, obtain concurrence from the activity that owns the equipment prior to submitting to the Navy Crane Center. Photographs of the accident scene and material/property damage shall be taken, if possible, and attached to the report. The Navy Crane Center will review accident reports and issue crane safety advisories and lessons learned as appropriate. The custodian of the Crane and Rigging Gear Accident Report is the activity that generates the report. Any request for copies of these reports should be directed to the originating activity.

12.5 Near Misses and Other Unplanned Occurrences. Near misses and other unplanned occurrences with lessons to be learned that do not fall under the crane and rigging gear accident definitions, shall be reported using figure 12-2 (Near Miss Report). E-mail (noted above) within 30 days of the occurrence. A near miss is a situation where an accident was avoided by mere chance or where intervention prevented an ongoing sequence of events that would have resulted in an accident. It is not intended that the investigation and report be as thorough as that for a crane or rigging gear accident; however, the investigation and report should be commensurate with the significance of the event.

CRANE AND RIGGING GEAR ACCIDENT REPORT

Accident Category: ☐ Crane Accident ☐ Rigging Gear Accident

From: **UIC:**	**To:** Navy Crane Center Bldg 491 NNSY Portsmouth, VA 23709 Fax (757) 967-3808

Activity:	**Report No:**

Crane No:	**Category:**	**Accident Date:**	**Time:** hrs

Category of Service: ☐ SPS ☐ GPS		**Crane Type:**	**Crane Manufacturer:**

Was Crane/Rigging Gear Being Used in SPS? **Yes** _____ **No**_____	**Was Crane/Rigging Gear Being Used in a Complex Lift/Critical non-crane rigging operation?** **Yes**_____ **No**_____
Location:	**Weather:**

Crane Capacity:	**Hook Capacity:**	**Weight of Load on Hook:**

Fatality or Permanent Disability? ☐ Yes ☐ No **Material/Property Cost Estimate:**

Reported to NAVSAFECEN? ☐ Yes ☐ No

Accident Type:

☐ Personal Injury ☐ Overload ☐ Derail ☐ Damaged Rigging Gear

☐ Load Collision ☐ Two Blocked ☐ Dropped Load ☐ Damaged Crane

☐ Crane Collision ☐ Damaged Load ☐ Other Specify _____

Cause of Accident:

☐ Improper Operation ☐ Equipment Failure ☐ Inadequate Visibility

☐ Improper Rigging ☐ Switch Alignment ☐ Inadequate Communication

☐ Track Condition ☐ Procedural Failure ☐ Other Specify _____

Chargeable to:

☐ Crane Walker ☐ Rigger ☐ Operator

☐ Maintenance ☐ Management/Supervision ☐ Other Specify _____

Crane Function:

☐ Travel ☐ Hoist ☐ Rotate ☐ Luffing ☐ Telescoping ☐ Other ☐ N/A

Is this accident indicative of a recurring problem? ☐ Yes ☐ No

If yes, list Accident Report Nos.: _____

ATTACH COMPLETE AND CONCISE SITUATION DESCRIPTION AND CORRECTIVE/PREVENTIVE ACTIONS TAKEN AS ENCLOSURE (1). Include probable cause and contributing factors. Assess damages and define responsibility. For equipment malfunction or failure, include specific description of the component and the resulting effect or problem caused by the malfunction or failure. List immediate and long term corrective/preventive actions assigned and respective codes.

Preparer:	**Phone and email**	**Code**	**Date**

Concurrences:

	Code	**Date**
	Code	**Date**
Certifying Official (Crane Accidents Only):	**Code**	**Date**

FIGURE 12-1 (1 of 2)

CRANE AND RIGGING GEAR ACCIDENT REPORT INSTRUCTIONS

This form is designed for fax transmission without a cover page or by e-mail and, with enclosures and signatures, shall be the official document. Electronic submission will be accepted without signatures but the names of the preparer, concurring personnel, and certifying official (for crane accidents only) shall be filled in. The e-mail address is m_nfsh_ncc_accident@navy.mil. The fax number is (757) 967-3808.

1. Accident Category: Indicate either crane accident or rigging gear accident.

2. From: The naval activity that is responsible for reporting the accident and UIC number.

3. Activity: The naval activity where the accident took place.

4. Report No.: The activity assigned accident number (e.g., 95-001).

5. Crane No.: The activity assigned crane number (e.g., PC-5), if applicable.

6. Category: Identify category of crane (i.e., 1, 2, 3, or 4), if applicable.

7. Accident Date: The date the accident occurred.

8. Time: The time (24 hour clock) the accident occurred (e.g., 1300).

9. Category of Service: Check the applicable service (SPS as defined by NAVSEA 0989-030-7000).

10. Crane Type: The type of crane involved in the accident (e.g., mobile, bridge), if applicable.

11. Crane Manufacturer: The manufacturer of the crane (e.g., Dravo, Grove, P&H), if applicable.

12. SPS: Was the crane or rigging gear being used in an SPS lift?

13. Complex lift: Was the crane or rigging gear being used in a complex lift?

14. Location: The detailed location where the accident took place (e.g., building 213, dry dock 5).

15. Weather: The weather conditions at time of accident (e.g., wind, rain, cold).

16. Crane Capacity: The certified capacity of the crane (e.g., 120,000 pounds), if applicable.

17. Hook Capacity: The capacity of the hook involved in the accident at the max radius of the operation, if applicable.

18. Weight of Load on Hook: If applicable, the weight of the load on the hook.

19. Fatality or Permanent Disability?: Check yes or no.

20. Material/Property Cost Estimate: Estimate total cost of damage resulting from the accident.

21. Reported to NAVSAFECEN?: Self-explanatory.

22. Accident Type: Check all that apply.

23. Cause of Accident: Check all that apply.

24. Chargeable to: Check all that apply.

25. Crane Function: Check all functions in operation at time of accident. Check N/A if a rigging gear accident.

26. Is this a recurring problem?: Check yes or no. Identify any other similar accidents.

27. Situation Description/Corrective Actions: Self-explanatory.

28. Preparer: Self-explanatory.

29. Concurrences: Self-explanatory.

30. Certifying Official (Crane Accidents Only): Self-explanatory.

FIGURE 12-1 (2 of 2)

CRANE AND RIGGING GEAR NEAR MISS REPORT

Near Miss Category: ☐ **Crane Near Miss** ☐ **Rigging Gear Near Miss**

From: **UIC:**	**To: Navy Crane Center** **Bldg 491 NNSY** **Portsmouth, VA 23709** **Fax (757) 967-3808** **nfsh_ncc_accident@navy.mil**

Activity:	**Report No:**

Crane/Equipment No:	**Category:**	**Near Miss Date:**	**Time:** **hrs**

Category of Service: ☐ **SPS** ☐ **GPS**		**Crane /Equipment Type:**	**Crane/Equipment Manufacturer:**

Location:	**Weather:**

Crane/Equipment Capacity:	**Hook Capacity:**	**Weight of Load on Hook:**

Is this near miss indicative of a recurring problem? ☐ **Yes** ☐ **No**

If yes, list report numbers: _____

In the space below, include a brief description of the event and corrective actions taken to prevent recurrence:

Preparer:	**Phone and email**	**Code**	**Date**

FIGURE 12-2 (1 of 2)

CRANE AND RIGGING GEAR NEAR MISS INSTRUCTIONS

This form is designed for fax transmission without a cover page or by e-mail and, with enclosures and signatures, shall be the official document. Electronic submission will be accepted without signatures but the names of the preparer, concurring personnel, and certifying official (for crane accidents only) shall be filled in. The e-mail address is nfsh_ncc_accident@navy.mil. The fax number is (757) 967-3808.

1. Near Miss Category: Indicate either crane or rigging gear near miss.

2. From: The naval activity that is responsible for reporting the near miss and UIC number.

3. Activity: The naval activity where the near miss took place.

4. Report No.: The activity assigned near miss number (e.g., 95-001).

5. Crane No.: The activity assigned crane number (e.g., PC-5), if applicable.

6. Category: Identify category of crane (i.e., 1, 2, 3, or 4), if applicable.

7. Near Miss Date: The date the near miss occurred.

8. Time: The time (24 hour clock) the near miss occurred (e.g., 1300).

9. Category of Service: Check the applicable service (SPS as defined by NAVSEA 0989-030-7000).

10. Crane Type: The type of crane involved in the near miss (e.g., mobile, bridge), if applicable.

11. Crane Manufacturer: The manufacturer of the crane (e.g., Dravo, Grove, P&H), if applicable.

12. Location: The detailed location where the near miss took place (e.g., building 213, dry dock 5).

13. Weather: The weather conditions at time of the near miss (e.g., wind, rain, cold).

14. Crane Capacity: The certified capacity of the crane (e.g., 120,000 pounds), if applicable.

15. Hook Capacity: The capacity of the hook involved in the near miss at the maximum radius of the operation, if applicable.

16. Weight of Load on Hook: If applicable, the weight of the load on the hook.

17. Is this a recurring problem?: Check yes or no. Identify any other similar near misses or accidents.

18. Situation Description/Corrective Actions: Self-explanatory.

19. Preparer: Self-explanatory.

FIGURE 12-2 (2 of 2)

(INTENTIONALLY LEFT BLANK)

SECTION 13
TRAINING AND QUALIFICATION

13.1 Introduction. This section provides training and qualification requirements for military, civilian and contractor personnel involved in the operation, maintenance, inspection, and testing of Navy WHE. Ordnance handlers shall refer to NAVSEA OP-5 for training requirements, in lieu of the crane rigging and rigging gear inspection courses noted herein.

13.2 Training. Table 13-1 identifies mandatory and elective courses required for applicable WHE job functions. These are one-time courses except for licensed crane operators, who are required to take refresher courses as part of their license renewal, and category 3 non-cab operated crane operators who are required to re-take the course every three years. Personnel shall not perform weight handling maintenance, inspection, testing, operation, or rigging unless they have completed the required courses and are qualified by their supervisors. The courses are designed to reinforce and enhance existing knowledge for journeyman level personnel in the Navy WHE program. The training shall be provided by Navy Crane Center authorized instructors. The courses are designed to provide a minimum coverage of each subject and do not include hands-on applications.

All courses are available via the internet at Navy Knowledge Online (www.nko.navy.mil). Instructor-led training for these courses may be available upon request.

Additional training (e.g., hands-on) to enhance specific skills is encouraged. Such training is available from naval shipyards, other naval activities, and commercial training sources. Additional courses may be required to qualify personnel to perform unique critical job skills at an activity. Activities are responsible to ensure such supplemental training requirements are met.

13.2.1 Exceptions. New contracts, new hires, and newly assigned personnel, will have 180 days from their start date to obtain the Table 13-1 required training. Non-BOS contractors who do not have the Table 13-1 required training may perform maintenance on Navy WHE provided that personnel trained in accordance with this section write the statement of work for the contractor and inspect and accept the work after the contractor completes the job. OEM technicians and personnel trained to work on specific components (e.g., diesel engine repair, hydraulic component repair, tire repair/replacement, motor repair, etc.) are exempt. This exception does not apply to crane operators or riggers for any category of crane.

13.2.2 Training for Operator License Candidates. Crane operator license candidates shall take the applicable crane safety course. The General Crane Safety course satisfies the safety training requirement for all types of cranes. Candidates who will only operate category 2 and cab-operated category 3 cranes and candidates who will only operate category 4 cranes may take the crane safety course applicable to those cranes in lieu of the General Crane Safety course. Candidates who will only operate mobile boat hoists and rubber-tired gantry cranes may take the Category 2 and Cab-Operated Category 3 Crane Safety course.

13.2.3 Naval Shipyard Lifting and Handling Training. Naval shipyard personnel shall follow the requirements of the NAVSEA Crane Quality Manual in lieu of this publication.

Non-shipyard personnel who have completed naval shipyard lifting and handling training courses applicable to their job function(s) are not required to take the courses listed in table 13-1.

13.2.4 Crane Operators Licensed Prior to 2001. Operators who have successfully completed crane safety course(s) as part of their license requirement are not required to take the crane safety course(s) listed in table 13-1, but shall take the crane operator safety refresher courses for license renewal.

13.2.5 Refresher Training For Previously Trained Non-Cab Operated Category 3 Crane Operators. Category 3 (non-cab operated) crane operators shall re-take the Category 3 Crane Safety Course every three years.

13.2.6 Training for Users of Portable Manual and Powered Hoists. Users of portable manual and powered hoists on crane structures, portable gantry/A-frames, portable floor cranes, and cranes integral to larger machine systems shall take the Crane Rigger or Category 3 Crane Safety Course. The use of portable manual and powered hoists attached to other structures or equipment (for vertical lifting) requires training as a rigger.

13.2.7 Training for Mechanics, Electricians, Inspectors, and Load Test Directors of Section 14 Cranes, Powered Hoists, and Crane Structures. Mechanics, electricians, inspectors, and load test directors of portable cranes, powered hoists, and crane structures shall complete the applicable courses for mechanics, electricians, inspectors, or load test directors, before performing work, inspections, or tests on section 14 equipment designated as portable cranes, powered hoists, or crane structures.

13.2.8 Training for Users of Rigging Gear and Miscellaneous Equipment Used with Multi-Purpose Machines, Material Handling Equipment (Forklifts) and NAVFAC P-300 Equipment. Users of rigging gear or other miscellaneous equipment covered by section 14 attached to multi-purpose machines, equipment covered by NAVFAC P-300 equipped with a winch, or material handling equipment with crane attachments shall take the Crane Rigger Course. Users of rigging gear or other miscellaneous equipment covered by section 14 attached to other material handling equipment, and equipment covered by NAVFAC P-300, shall take the Crane Rigger or Category 3 Crane Safety Course.

13.2.9 Operation/Rigging in a Training Environment. Activity personnel who operate shore based cranes solely for training purposes to simulate operation of cranes used on ships or aircraft governed by other instructions (e.g., NAVSEA, NAVAIR, etc.) may follow the training requirement of the shipboard instruction (e.g., NAVSEA, NAVAIR, etc.).

13.3 Supervisors. It is recommended that supervisors participate in table 13-1 courses in their areas of cognizance.

13.4 Record Keeping. Record keeping for each student shall be the responsibility of the employing activity. Computer generated files are acceptable, provided they identify individual students, training dates, and examination results

13.5 Qualification. The minimum passing score for each course in table 13-1 shall be 70 percent. These courses are a prerequisite for the qualification of personnel performing job functions listed in table 13-1. In addition to the required training, personnel shall demonstrate adequate knowledge and/or skill required to perform assigned work as noted in appendix N. A knowledgeable supervisor shall determine when an employee is qualified to perform a particular job function based on demonstration of applicable knowledge and/or skills.

Additional qualification requirements for crane operators are addressed in sections 6 through 8.

Table 13-1 Required Courses for Crane Personnel

Course Title NKO Catalog # Frequency Job Function	General Crane Safety NCC-GCS-02 Initial	General Crane Safety Refresher NCC-GCSR-03 Every Two Years (after initial)	Category 2 and Cab Operated Category 3 Crane Safety NCC-C2CS-01 Initial	Category 2 Crane Safety Refresher NCC-C2CSR-02 Every Two Years (after initial)	Category 3 Crane Safety NCC-C3CS-1.0 Every Three Years	Category 4 Crane Safety NCC-C4CS-01 Initial	Crane Rigger NCC-CR-03 Once	Rigging Gear Inspection NCC-RGI-02 Once
Category 1 Crane Operator: Notes 01 and 02	X	X						
Category 2 Crane Operator: Notes 02 and 03			X Note 04	X Note 07				
Category 3 Cab Operated Crane Operator: Note 03			X Note 04	X Note 07				
Category 3 Non-cab Crane Operator: Note 05					X Notes 06 and 07			
Category 4 Crane Operator: Note 01		X				X Note 04		
Crane Rigger: Note 05							X	
Rigging Gear Inspector: Note 05								X Note 08
Crane Mechanic: Note 05								
Mobile Crane Mechanic: Note 05								
Mechanical Crane Inspector: Notes 05 and 11								
Crane Electrician: Note 05								
Electrical Crane Inspector: Notes 05 and 11								
General Inspector: Notes 05, 11 and 13								
Load Test Director: Notes 05 and 14								
Certifying Official: Note 05								
Contract Personnel (e.g. OICC, FEC, FEAD, Spec Writer, Inspector, KO, COR, ET, SUPSHIP)								

Notes

01 Category 1 and category 4 crane operators shall also satisfy the requirements of sections 6, 7, 8 and appendices G and J.

02 Mobile boat hoist and rubber tired gantry crane operators shall also satisfy sections 6, 7, 8, and appendices I and L. See section 13.2.2 for additional training information.

03 Category 2 and cab operated category 3 crane operators shall also satisfy the requirements of sections 6, 7, and 8 and appendices H and K.

04 Satisfactory completion of *General Crane Safety* or *Category 4 Crane Safety* satisfies the requirements of this course.

05 Personnel shall also satisfy applicable appendix N requirements.

06 Satisfactory completion of *General Crane Safety* or *Category 2 Crane Safety* or *Category 4 Crane Safety* satisfies the requirements of this course.

07 Satisfactory completion of *General Crane Safety Refresher* or *Category 2 Crane Safety Refresher* satisfies the retraining requirement for this course.

08 Satisfactory completion of *Crane Rigger* satisfies the requirements of this course.

Table 13-1 Required Courses for Crane Personnel (Continued)

Course Title NKO Catalog # Frequency Job Function	Crane Mechanic NCC-CM-01 Once	Mobile Crane Mechanic NCC-MCM-01 Once	Mechanical Crane Inspector NCC-MCI-01 Once	Crane Electrician NCC-CE-01 Once	Electrical Crane Inspector NCC-ECI-01 Once	Load Test Director NCC-LTD-01 Once	Certifying Official NCC-CO-01 Once	Contractor Crane Awareness NCC-CCA-02 Once
Category 1 Crane Operator: Notes 01 and 02								
Category 2 Crane Operator: Notes 02 and 03								
Category 3 Cab Operated Crane Operator: Note 03								
Category 3 Non-cab Crane Operator: Note 05								
Category 4 Crane Operator: Note 01								
Crane Rigger: Note 05								
Rigging Gear Inspector: Note 05								
Crane Mechanic: Note 05	X							
Mobile Crane Mechanic: Note 05	X	X Note 09						
Mechanical Crane Inspector: Notes 05 and 11	X	X Note 10	X Note 09					
Crane Electrician: Note 05				X				
Electrical Crane Inspector: Notes 05 and 11				X	X Note 12			
General Inspector: Notes 05, 11 and 13	X	X Note 10	X Note 09	X	X Note 12			
Load Test Director: Notes 05 and 14						X Note 14		
Certifying Official: Note 05							X Note 15	
Contract Personnel: (e.g. OICC, FEC, FEAD, Spec Writer, Inspector, KO, COR, ET, SUPSHIP)								X Note 15

Notes

09 **Satisfactory completion of *Crane Mechanic* is prerequisite to taking this course.**

10 **Satisfactory completion of *Mobile Crane Mechanic* is prerequisite to taking *Mechanical Crane Inspector* for personnel who will be inspecting mobile cranes.**

11 **Personnel who perform maintenance and/or condition inspections are required to satisfactorily complete *Mechanical Crane Inspector* or *Electrical Crane Inspector*, as applicable.**

12 **Satisfactory completion of *Crane Electrician* is prerequisite to taking this course.**

13 **Crane inspectors who inspect both mechanical and electrical components (i.e., General Inspector) shall satisfy these requirements.**

14 **Satisfactory completion of the applicable crane safety course [for the type of crane to be tested by the candidate] is prerequisite to taking *Load Test Director*.**

15 **This course is elective.**

(INTENTIONALLY LEFT BLANK)

SECTION 14
RIGGING GEAR
AND MISCELLANEOUS EQUIPMENT

14.1 Introduction. The purpose of this section is to provide maintenance, inspection, and test requirements for rigging and miscellaneous lifting equipment not covered in sections 2 through 11, as well as to provide specific use criteria and precautions resulting from the Navy's experience with the equipment. These requirements apply to covered equipment used, with or without cranes, in weight handling operations. These requirements also apply to covered equipment used with multi-purpose machines, material handling equipment (e.g. forklifts), and equipment covered by NAVFAC P-300. These requirements also apply to contractor owned rigging equipment used with Navy and BOS contractor owned WHE, multi-purpose machines, material handling equipment, and equipment covered by NAVFAC P-300 used in weight handling operations. Except for BOS contracts, these requirements do not apply to contractor owned equipment used with contractor owned cranes, forklifts, backhoes, excavators, and front-end loaders.

This section and the applicable portions of section 10 provide the minimum requirements for developing and maintaining a program for covered equipment, i.e., maintenance, inspection, and use of applicable gear; operational responsibilities and requirements, operational risk management, critical non-crane rigging operations, etc. Knowledge factors for riggers involved in weight handling operations are provided in appendix N. This publication does not provide information on rigging principles or techniques. Such information can be found in rigging handbooks, rigging gear users association manuals, OEM publications, textbooks, consensus standards, etc. (see appendices Q and R) and shall be used to provide guidance to rigging personnel. Activities have the option to establish local rigging procedures based upon established rigging references and the activity engineering organization may develop design and use criteria for gear used in non-standard applications.

For Government furnished equipment under the cognizance of NAVSEA 08, this section applies when the applicable technical manual invokes the NAVSEA Lifting Standard. For all equipment governed by the NAVSEA Lifting Standard, where requirements differ from this section, the Lifting Standard shall be followed.

These requirements also apply to rigging gear and miscellaneous equipment used by other military services on Navy maintained and certified cranes at joint bases

14.1.1 Covered Equipment. This section applies to the following equipment used in weight handling operations: rigging gear (slings, including chain, wire rope, metal mesh, synthetic rope, synthetic webbing, and synthetic roundslings; shackles; eye bolts; swivel hoist rings; links and rings; turnbuckles; insulated links; hooks; etc.); portable load indicators (dynamometers, load cells, crane scales, etc.); and portable manual and powered hoists. Also included are crane structures, which are defined as jib cranes, bridge cranes, monorails, and davits that do not have permanently mounted hoists. Also covered are below the hook lifting devices as identified in ASME B30.20 (e.g., spreader beams, plate clamps, magnets, vacuum lifters); container spreaders; personnel platforms; portable gantry/A-frames, and portable floor cranes used for general lifting; and cranes and hoists procured with, integral to, and used solely in

support of larger machine systems (milling machines, press brakes, etc.). Integral lifting attachments (e.g., threaded holes, welded lift lugs on equipment to be lifted) are not covered. However, where these are installed on existing equipment they shall be treated as alterations in accordance with paragraph 14.6. OEM provided rigging gear used for limited lifts (e.g., offload, initial storage, reloading, and shipment) of that OEM's product is not covered, however where OEM provided specialized rigging equipment is used, the activity shall ensure that the equipment is in good condition and that personnel using the specialized equipment know how it is to be used.

Navy owned rigging gear and miscellaneous equipment (and Air Force and Army owned rigging gear and miscellaneous equipment at joint bases used with Navy maintained and certified cranes) in an approved test and inspection program (e.g., NAVAIR, NAVSEA, SSPO, Air Force, or Army approved program) may be used for lifting with shore based weight handling equipment provided its test and inspection are current and it is given a pre-use inspection of paragraph 14.4.2 before each use.

14.2 Record Keeping. Initial and periodic inspections and load tests required herein shall be documented for each piece of applicable equipment or gear. Computer generated files are acceptable provided they identify the individual components, dates of inspections and tests, and inspection/test results. The latest load test report and inspection report for each piece of equipment shall be retained.

14.3 Equipment Markings. Each piece of applicable equipment or gear shall be tagged, engraved, or otherwise marked in a manner that clearly identifies the rated load and an indication of re-inspection due date. The marking of re-inspection due dates with the month and year is an acceptable practice; the expiration date is the last day of the month. Additionally, the equipment or gear shall be marked with a unique serial number that will allow it to be traced to its test and inspection documentation. Below the hook lifting devices weighing more than 100 pounds shall be marked with the weight of the device. Markings shall be located where the strength of the component will not be reduced. Generally, vibra-etch methods and low stress dot faced stamps are acceptable (consult OEM as necessary for allowable types and locations of markings). For multiple part equipment that can be separated (e.g., shackles with pins), the subordinate part (the pin) shall be identified to the primary part (the bow). This is not intended for equipment that is not field disassembled such as swivel hoist rings. If space limitations do not permit legible marking, a tag containing required markings shall be attached and engineering guidance shall be obtained. OEM markings shall not be removed or altered unless directed by the activity engineering organization. If markings are removed during a repair process or are illegible due to wear, equipment shall be re-marked before use. Procurement documents shall ensure the equipment or gear is marked with the manufacturer's name, logo, trademark, or other method making it possible to identify the manufacturer. Multiple-leg sling assemblies shall be marked with the rated load of each leg, the rated load of the entire assembly and the sling angle upon which the rated load is based (sling assemblies supporting personnel platforms shall have each leg marked or tagged with its rated load). Markings for synthetic rope and webbing and wire rope used for lashing shall identify the spool, master reel or lot from which taken and shall indicate the rated load and re-inspection due date. Portable

floor cranes shall be marked to clearly identify the proper leg extension position for each corresponding boom extension position.

14.3.1 Alternate Re-Inspection Due Date Markings. Alternate methods of marking may be used (e.g., metal tags, color coding, plastic bands, etc.) in lieu of the date. The activity weight handling instruction shall identify the type of marking allowed. Riggers and category 3 operators shall be trained in their activity's alternative marking program.

14.4 Test and Inspection Program. Each activity shall establish a program for applicable equipment, including a documented initial inspection and load test followed by pre-use and documented periodic inspections (and periodic tests as noted).

Unsatisfactory equipment and gear shall be removed from service and disposed of or repaired.

Equipment and gear that is not yet in a test and inspection program or is currently out of service shall be segregated from gear that is in service.

14.4.1 Load Test. Except as noted, each piece of applicable equipment shall be given an initial load test. For each test, the equipment shall withstand the load test for a minimum of two minutes (10 minutes for hoists, cranes, and crane structures) with no permanent deformation. For hoists, trolleys, and other moving machinery, lift (travel) through at least one revolution of all moving parts. Nominal test loads shall be as shown in table 14-1 and are expressed as percentages of the rated load established by the OEM or the activity engineering organization. The actual test load shall be +5/-0 percent of the nominal test load. A certificate of load (proof) test from the supplier of purchased equipment (stating the actual test load and test duration) will satisfy this requirement, provided the proof loads and test duration meet or exceed the above noted requirements. Frequencies for periodic load testing of applicable equipment are shown in table 14-1. (See below for controlled storage exception for portable manual hoists.) For equipment where the OEM does not permit testing at the percentages shown, the rated load shall be reduced such that the OEM's allowed test load will serve as the load test value. Equipment requiring a one-time load test that has been load tested in accordance with previous editions of this publication is not required to be retested. When testing wire rope and synthetic rope slings, ensure the slings are prevented from unlaying. (See use criteria for these slings.) Where it is not practical to test locally fabricated special rigging gear (e.g., non-standard eye bolts made specifically for a particular application), the activity engineering organization shall approve the use of such gear. Where test weights are used to test rigging gear and other equipment covered by this section, the requirements of paragraph 3.7.1.1 shall apply for the test weights.

14.4.1.1 Load Test of Rigging Assemblies. A rigging assembly made up of component parts (slings, shackles, rings, etc.) that are reserved for that particular assembly may be tested as a complete assembly. A rigging component tested as part of an assembly shall not be removed and used independently, unless it can be proven that the component was tested at the applicable percentage shown in table 14-1.

14.4.1.2 Load Test of Lashing. Synthetic rope and webbing and wire rope used for lashing need not be individually tested provided that a sample from each spool, master

reel, or lot is tested and determined to have satisfactory breaking strength or OEM/supplier certification of proof test is furnished.

14.4.1.3 Crane Structures. If a crane structure is used to test multiple portable hoists throughout the year, the crane structure's capacity shall be greater than the highest test load to prevent continuous overloading of the crane structure. Top running crane runway rails to be used during crane structure load tests shall be certified per NAVFACINST 11230.1. If the crane load test is also the load test for track certification, the track shall be given a control inspection prior to load testing and shall have no catastrophic defects as defined by NAVFACINST 11230.1.

14.4.1.4 Controlled Storage Exception for Portable Manual Hoists. The requirements for load testing within 12 months prior to use do not apply to portable manual hoists placed in extended controlled storage as follows:

a. The hoist shall be inspected, repaired if necessary, and load tested.

b. Upon completion of the above, the hoist shall be placed in controlled storage and given a tracking number.

c. A numbered locking security seal (metal or plastic) shall be applied to the pull chain or operating lever to ensure the hoist cannot be operated.

d. When the hoist is needed for use, it shall be visually inspected (for apparent damage or significant deterioration) and operated prior to issuance.

e. The reinspection due date, not exceeding one year from the date placed in use, shall be marked on the hoist.

14.4.1.5 Exception to Periodic Load Test. Crane structures with rated loads of 100 pounds or less, or that have a minimum design factor, based on the yield strength of the material, of 10 or greater do not require periodic load testing. A periodic inspection is required every two years.

14.4.2 Pre-use Inspection (Frequent Inspection). Applicable equipment shall be visually inspected by the user prior to each use to verify rated load, marking, inspection status, serial number, and condition. No documentation of pre-use inspection is required.

14.4.3 Periodic Inspection. Periodic documented inspections for covered equipment are specified in table 14-1. Rigging gear used exclusively for lifts of 100 pounds or less and gear with a design factor of 10 or greater with respect to the yield strength of the material are excluded from these periodic inspection requirements.

14.4.4 Deferral of Inspection and Test for Emergent Conditions. When an emergent or other contingent condition exists precluding the timely inspection (and testing) of rigging gear or other miscellaneous equipment as required by table 14-1, the certifying official for the activity using the rigging gear or other miscellaneous equipment, with concurrence by the activity engineering or inspection organization, may approve in writing an extension of the periodic documented inspection (or test). The extension

shall not exceed 45 calendar days from the expiration date. Before extending a periodic documented inspection or test, the rigging gear or miscellaneous equipment shall pass a pre-use visual inspection to the maximum extent practical. Each authorization to extend a periodic inspection or test shall be documented for the affected piece of rigging gear or miscellaneous equipment.

14.5 Deficiencies. Deficiencies include failure or malfunction of equipment and major or unsafe discrepancies between design drawings and equipment configuration. This does not include normal wear on the equipment. In those instances where a deficiency is detected that has applicability at other Navy activities, the Navy Crane Center shall be notified as soon as practical, but in no case later than five days of the discovery. A summary report of the deficiency, including corrective actions taken or recommended, shall be forwarded to the Navy Crane Center within 21 days. Figure 2-1 shall be used to report the deficiency to the Navy Crane Center.

14.6 Repairs and Alterations. Repairs, (including the adjustment or disassembly/reassembly of components to accomplish repairs), maintenance, and alterations to equipment shall be performed in accordance with OEM or activity engineering instructions. The instructions shall require re-inspection (and load test for affected load bearing components) of the repaired or altered equipment. Removal of cracks in load bearing parts shall be verified by nondestructive test as described in appendix E, paragraph 1.4.3. Work documents for repairs affecting load bearing, load control, or operational safety shall be retained for seven years. Other repair work documents shall be retained for one year. Alterations to load-bearing, load controlling or operational safety devices on hoists, cranes, and crane structures require Navy Crane Center approval; see section 4 for procedures. Alteration documentation shall be retained for the life of the equipment.

14.7 Slings. Slings shall meet the selection, use, and maintenance criteria of ASME B30.9, with additions and changes as noted below. Loads on slings increase with increasing angles from vertical. Slings shall not be used at angles of less than 30 degrees from horizontal, unless specifically authorized by an engineering work document. In addition, capacity reductions may be required for slings used in basket or choker hitches, or where the body of the sling is bent around a hook, shackle, or other rigging gear. Components in multiple leg sling assemblies shall be sized based on the worst case distribution of loads. For example, slings, shackles, and attachment points in a four leg assembly for a four-point lift shall be sized based on either pair of diagonally opposing legs carrying the entire load, unless the assembly is equipped with devices that automatically adjust for equal distribution of the load such as engineered equalizer plates. Chain hoists may be used for equalizing loads only if used in conjunction with load indicating devices. This requirement for load indicators does not apply to chain hoists used for leveling the load in three-point or two-point lift configurations.

Table 14-1

Test Load Percentages for Initial and Periodic Load Tests, Periodic Load Test Frequencies, and Inspection Frequencies

Equipment	Test Load Percentage	Periodic Test Load Frequency	Periodic Inspection Frequency
Beam clamps	125	NA[1]	Every 2 years
Below the hook lifting devices (except as noted)	125	NA[1]	Annual
Blocks (tackle, snatch, wire rope)	200	NA	Every 2 years
Chain slings	200	NA	Annual[2]
Container spreaders	125	NA[1]	Annual
Crane integral to larger machine systems	125	Annual	Annual
Crane structures that do not have permanently mounted hoists	125	Every 2 years	Every 2 years
Equalizer beams and flounder plates	125	NA[1]	Annual
Eye bolts	200	NA	Every 2 years
Eye nuts	200	NA	Every 2 years
Hoists	125	Annual	Annual
Hooks	200	NA	Annual
Insulated Links	200	NA	Annual
Lashing	Break Test	NA	Annual
Lifting beams	125	NA[1]	Annual
Links and rings (excluding links and rings for sling assemblies)	200	NA	Every 2 years
Magnetic lifters	200	Annual	Annual
Metal mesh slings	200	NA	Annual
Personnel platforms	125	Annual[4]	Annual[4]
Plate clamps	125	Annual	Annual
Portable gantry/A-frames, portable floor cranes	125[5]	Every 2 years	Every 2 years
Portable load indicating devices	200	NA	Annual[6]
Portable padeyes/lugs See paragraph 14.9.2 for attachment fasteners.	125[3]	NA	Every 2 years
Shackles	200	NA	Every 2 years
Swivels	200	NA	Every 2 years
Swivel hoist rings (safety hoist rings)	200	NA	Every 2 years
Synthetic rope slings	200	NA	Annual
Synthetic roundslings	200	NA	Annual
Synthetic webbing slings	200	NA	Annual
Turnbuckles	200	NA	Every 2 years
Vacuum lifters	125	Annual	Annual
Wire rope grommets	200	NA	Annual
Wire rope slings (except hand tucked)	200	NA	Annual
Wire rope slings (hand tucked)	125	NA	Annual

(1) Container spreaders and below the hook lifting devices, including equalizer beams, flounder plates, and beam clamps, with rated loads greater than 10,000 pounds, used in cargo transfer shall be load tested every 4 years.

(2) Chain slings used in shipbuilding, ship repair, shipbreaking, or cargo transfer shall be inspected every three months per 29 CFR 1915.112 and 1917.42 (h) respectively.

(3) New gear used in cargo transfer shall be tested at 200 percent of the rated load.

(4) See section 10 for additional requirements.

(5) Portable floor cranes shall be tested to 125 percent of the OEM's rated load prior to initial use. Subsequent tests for units that are equipped with internal load limiting devices shall be performed at 100 to 105 percent of the OEM's rated load. Adjustable height portable gantries shall be tested at maximum height.

(6) Portable load indicating devices shall be inspected and calibrated in accordance with the activity's calibration program and the OEM's recommendations.

TABLE 14-2
Minimum Allowable Thickness at Any Point on the Chain Sling Link

Nominal Size of Link (Inches)	Minimum Allowable Thickness (Inches)
7/32	0.189
9/32	0.239
5/16	0.273
3/8	0.342
1/2	0.443
5/8	0.546
3/4	0.687
7/8	0.750
1	0.887
1 1/4	1.091
1 3/8	1.187
1 1/2	1.261

14.7.1 Chain Slings and Fittings

14.7.1.1 Chain Sling Inspection Criteria. For those deficiencies identified below, each link and each attachment shall be examined individually (taking care to expose inner link surfaces). Nicks and cracks in individual links or components shall be removed by grinding. The link or component shall be measured at smallest diameter after grinding.

14.7.1.2 Chain Sling Rejection Criteria. The sling shall be removed from service if inspection reveals any of the following:

a. Reduction of link size below the values of table 14-2 or as limited by the OEM if more restrictive. For sizes not shown consult the OEM.

b. Detectable deformation.

c. Nicks or cracks that cannot be removed by grinding without reducing the thickness below the values in table 14-2. Removal of defects to this limit will not require a load test.

d. Knots in any part of the sling.

14.7.1.3 Chain Sling Use Criteria. Chain slings shall be used in accordance with OEM recommendations. Chain slings are recommended for use in abrasive and high temperature environments that may damage other slings. Chain slings shall not be used where their use increases the risk of electrical shock or electrocution, or where damage to equipment may result. For use in temperatures below -40 or above 400 degrees Fahrenheit (F), follow OEM recommendations for rated load reduction. Where a chain sling is used in a choker hitch, the capacity shall be reduced to reflect the efficiency percentages shown in table 14-4.

14.7.2 Wire Rope Slings

14.7.2.1 Wire Rope Sling Inspection Criteria. Inspection shall be conducted on the entire length of each sling, including splices, end attachments, and fittings.

14.7.2.2 Wire Rope Sling Rejection Criteria. The sling shall be removed from service if inspection reveals any of the following:

a. Severe localized abrasion or wear.

b. Kinked, crushed, or birdcaged sections, or any other damage resulting in distortion of the wire rope structure.

c. Evidence of heat damage.

d. End attachments that are cracked or deformed.

e. Wear in the end attachment socket (excluding the swage area) exceeding 10 percent of the OEM's nominal socket dimensions or 5 percent of the OEM's nominal diameter of the socket pin. All swaged end connections shall be steel.

f. Severe corrosion of the wire rope, fittings, or attachments.

g. Broken wires:

(1) Single part and strand laid wire rope slings: 10 randomly distributed broken wires in one rope lay length, or five broken wires in one strand in one lay length, or two broken wires within one lay length of the end connection.

(2) Braided wire rope slings less than eight parts: 20 randomly distributed broken wires in one rope lay length, or one completely broken strand.

(3) Braided wire rope slings eight parts or more: 40 randomly distributed broken wires in one rope lay length, or one completely broken strand.

(4) Cable laid wire rope slings: 20 randomly distributed broken wires in one rope lay length, or one completely broken strand.

h. Knots in any part of the sling.

14.7.2.3 Wire Rope Sling Use Criteria. Wire rope slings shall not be used over a pin, shackle, hook, or ring of less than the nominal diameter of the wire rope. If the body of the sling is bent around an object that is greater than 40 times the diameter of the wire rope (e.g., basket hitch), then the total capacity of the sling is equal to two times the sling's single leg lift capacity. If the body of the sling is bent around a pin, hook, or other object that is 40 times the diameter of the sling or less, the total capacity shall be reduced to reflect the efficiency percentages shown in table 14-3. For loads with non-circular cross sections, "D" shall be derived from the minimum bend diameter of the wire rope around the corner of the load. No additional reduction is required for endless slings that are rated and used based on a D/d efficiency of 50 percent. Where a wire rope sling is used in a choker

hitch, the capacity shall be reduced to reflect the efficiency percentages shown in table 14-4.

Chafing protection shall be used where necessary to protect the load and the sling from damage In addition, for slings bent around corners, the corners of the load shall be rounded (e.g., pipe sections, commercially available blocks designed for that purpose, etc.) to provide a minimum D/d ratio of one to one.

Except for braided slings, wire rope slings shall not be used in single leg vertical hitches, unless a method is used to prevent unlaying of the rope. Wire rope slings shall not be used where their use increases the risk of electrical shock or electrocution, damage to equipment may result, or exposure to temperatures below -40 or above 400 degrees F may occur. (For fiber core slings, the maximum temperature shall be 180 degrees F.)

14.7.2.3.1 Additional Criteria for Wire Rope Endless Slings. To determine the vertical rated load of an endless sling, use the following equation:

$$\text{Rated Load} = \frac{\text{NRS x D/d Efficiency x 2}}{\text{DF}}$$

Where: NRS is the nominal rope strength listed in Federal Spec RR-W-410, the minimum breaking force listed in the ASTM A-1023, the nominal rope strength provided by the wire rope OEM, or the actual breaking strength based on destructive testing of material samples.
D/d Efficiency is taken from table 14-3.
DF is the design factor (5 or greater).

14.7.2.3.1.1 Load Test. The sling shall be tested over a pin with a diameter equal to or greater than the wire rope diameter. The test load shall be 200 percent of the rated load determined from the above equation using the efficiency factor derived from the diameter of the test pin, with a maximum efficiency of 78 percent. For a test pin diameter between the values shown in table 14-3, the efficiency shall be determined from a curve plotted from the D/d values and efficiency percentages shown. The test load and test pin diameter shall be recorded. For slings procured from commercial vendors, the vendor's proof test shall be in accordance with these criteria.

14.7.2.3.1.2 Marking and Usage. Endless slings shall have a marked rated load based on a D/d efficiency of 50 percent and may be used over various size pins at loads not exceeding the marked rated load or for a sling that will be used in a specific application over a single pin diameter, the marked rated load shall be the rated load based on a D/d efficiency for that pin diameter; in which case the sling shall be marked to indicate that pin diameter. The load test pin diameter shall be greater than or equal to the specific use pin diameter.

a. If the test pin diameter is greater than the wire rope diameter, the sling may be used at a load higher than the marked rated load with written approval from the activity engineering organization. The allowable load shall be the load derived from the above equation for the intended pin diameter but shall not exceed 50 percent of the test load. Authorization shall be provided for each intended use at a load higher than the marked rated load.

When using wire rope endless slings, ensure the splice is situated at least 10 rope diameters from the load bearing area.

TABLE 14-3
Efficiency Factors for Various Wire Rope Slings

D/d Ratio	**Efficiency Percentage**
1:1	50
2:1	65
4:1	75
5:1	78
8:1	83
12:1	87.5
16:1	90
24:1	92.5
40:1	95
over 40:1	100

Where D/d is the ratio of the diameter of the pin, hook, or other object the wire rope is bent around, divided by the diameter of the wire rope sling (component rope diameter for multi-part slings). Efficiency is expressed as the percentage of the remaining capacity of each leg of the sling. For D/d ratios between the values shown, use the lower efficiency percentage or, alternatively, plot a curve of D/d versus efficiency percentage. Multi-part slings shall only be used where the D/d efficiency is at least 75 percent (D/d ratio of 4:1 for the component rope).

TABLE 14-4
Rated Loads For Slings In A Choker Hitch

Choke Angle in Degrees (See Figure 14-1)	**Percentage of Vertical Rated Load**		
	Chain	Wire Rope, **Synthetic Rope**	**Synthetic Web and Round**
121-135	80	75	80
90-120	see Note 1	65	65
60-89	see Note 1	55	55
30-59	see Note 1	46	46
0-29	see Note 1	36	36

Notes:

1. For chain slings with a choke angle of less than 121 degrees, the percent of rated capacity shall be determined by the sling manufacturer or the activity engineering organization.

2. Multi-part slings (braided slings) react differently than standard wire rope slings in a choker hitch; therefore, choker hitch capacities shall be determined by the OEM, ASME B30.9 tables, or the procedures developed by the Wire Rope Technical Board.

CHOKER HITCH CONFIGURATIONS

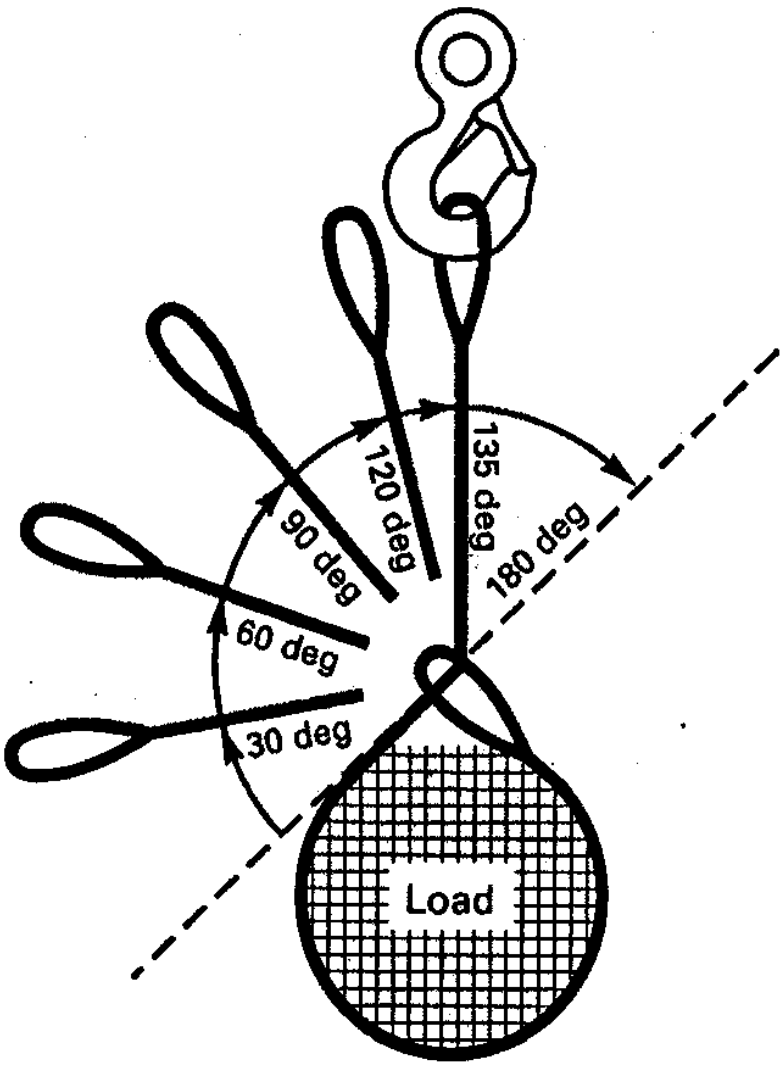

Angle of Choke

Note: Choker hitch angles greater than 135 degrees are considered unstable and shall not be used.

FIGURE 14-1

14.7.2.3.2 Additional Criteria for Multi-Part Wire Rope Slings. Multi-part wire rope slings (sometimes referred to as braided slings) shall have their OEM rated capacity reduced and marked to 70 percent of OEM capacity. Higher capacities based on documented destructive testing of sample slings may be approved by Navy Crane Center on a case basis. These slings shall be used at D/d ratios of at least 4:1 (75 percent efficiency) as noted by table 14-3. When used in a choker hitch, follow the notes of table 14-4.

14.7.3 Metal Mesh Slings

14.7.3.1 Metal Mesh Sling Inspection Criteria. Inspection shall be conducted on the entire length of each sling, including welds, end attachments, and fittings.

14.7.3.2 Metal Mesh Sling Rejection Criteria. The sling shall be removed from service if inspection reveals any of the following:

a. A broken weld or broken brazed joint along the sling edge.

b. A broken wire in any part of the mesh.

c. Reduction in wire diameter of 25 percent due to abrasion or 15 percent due to corrosion.

d. Lack of flexibility due to distortion of the mesh.

e. Distortion of the choker fitting such that the depth of the slot is increased by more than 10 percent.

f. Distortion of either end fitting such that the width of the eye opening is increased by more than 10 percent.

g. A reduction of 15 percent of the original cross sectional area of metal at any point around the hook opening of the end fitting.

h. Visible distortion of either end fitting out of its plane.

i. Any cracks in either end fitting.

j. Knots in any part of the sling.

14.7.3.3 Metal Mesh Sling Use Criteria. Metal mesh slings shall be used in accordance with OEM recommendations. Metal mesh slings are recommended for use in abrasive and high temperature (up to 550 degrees F) environments that may damage other flat slings, such as web slings. Metal mesh slings shall not be used where their use increases the risk of electrical shock or electrocution, or where damage to equipment may result. Elastomer coated slings shall not be used in temperatures below 0 degrees or above 200 degrees F.

14.7.4 Synthetic Slings. Where non-metallic slings are used (for ease of handling, equipment protection, non-conductivity, etc.), only slings made from synthetic materials shall be used. Natural fiber rope shall not be used for slings. Synthetic slings can be easily cut at sharp corners or edges. Chafing protection shall be used where there is a possibility of the sling being cut or otherwise damaged by the load. Chafing protection material shall be of sufficient thickness and strength to prevent sling damage. With high stresses on slings, soft chafing protection material may not maintain the minimum required radius or provide the required protection. Harder materials, such as split piping sections or special rounded shoes are recommended. Sling manufacturers also provide wear protection products that protect slings from sharp corners or edges. Activities should contact the OEM's of their slings for availability of these specialty protection products. Ensure the rigging configuration is stable and slings cannot slide off the chafing protection material. Ensure slings are not excessively bunched in the bowl of the hook or in shackles, which can cause uneven loading on the fibers.

14.7.4.1 Synthetic Rope Slings

14.7.4.1.1 Synthetic Rope Sling Inspection Criteria. Inspection shall be conducted on the entire length of each sling, including splices, end attachments and fittings.

14.7.4.1.2 Synthetic Rope Sling Rejection Criteria. The sling shall be removed from service if inspection reveals any of the following:

a. Cuts or gouges.

b. Excessive wear or abrasion of the surface fibers or yarns.

c. Considerable filament or fiber breakage along the line where adjacent strands meet (light fuzzing is acceptable).

d. Powder or particles of broken filaments or fibers inside the rope between the strands (twist or pry rope open for inspection). Presence of fused filaments between strands.

e. Discoloration, fading, or roughness that may indicate rotting, chemical damage, or excessive exposure to sunlight or other radiation. Weakness or brittleness of filaments or fibers.

f. Kinks, backturns, or distortion in the lay of the strand.

g. Variations in the size or roundness of the strands.

h. Melting, burn marks, charring, or other evidence of heat damage.

i. Cracked, distorted, broken, or excessively worn, pitted, or corroded end fittings.

j. Knots in any part of the sling.

k. Severance of one-third of the cover (outer) yarns.

l. Reduction in diameter greater than 10 percent of nominal diameter.

m. Any other condition that causes doubt as to the strength of the sling.

14.7.4.1.3 Synthetic Rope Sling Use Criteria. The minimum D/d ratio when bending the straight run of a sling over a hook, pin, or other object shall be 1:1. (Note: Rated load tables shown in ASME B30.9 for basket hitches and endless slings are based on a minimum D/d ratio of 8:1. For D/d ratios less than 8:1, use table 14-3.) Where a synthetic rope sling is used in a choker hitch, the capacity shall be reduced to reflect the efficiency percentages shown in table 14-4. Stranded synthetic rope slings shall not be used in a single part vertical hitch, unless a method is used to prevent unlaying of the rope. Slings shall not be used where there is a danger of chemical attack, overheating, or other damage. Nylon and polyester slings shall not be exposed to temperatures exceeding 194 degrees F (140 degrees F for polypropylene slings) or OEM recommendations whichever is more restrictive. (Heat or flame may be used to melt non-load-bearing ends to prevent fraying.) Slings shall not be painted. Exposure to sunlight shall be minimized. Slings shall be stored indoors or in a suitable container. Synthetic rope slings shall not be substituted for other types of slings shown on rigging sketches without prior engineering approval.

14.7.4.2 Synthetic Webbing Slings

14.7.4.2.1 Synthetic Webbing Sling Inspection Criteria. Inspection shall be conducted on the entire length of each sling, including stitches, end attachments, and fittings.

14.7.4.2.2 Synthetic Webbing Sling Rejection Criteria. The sling shall be removed from service if inspection reveals any of the following:

a. Melting, burn marks, charring, or other evidence of heat damage.

b. Discoloration, fading, or roughness that may indicate rotting, chemical damage, or excessive exposure to sunlight or other radiation.

c. Crushed webbing, holes, snags, punctures, tears, or cuts (in some cases indicated by the exposure of red safety alert yarns).

d. Broken or worn stitching in load bearing splices.

e. Excessive wear, abrasion, or embedded abrasive particles.

f. Knots in any part of the sling.

g. Cracked, distorted, broken, or excessively worn, pitted, or corroded end fittings.

h. Any other condition that causes doubt as to the strength of the sling.

14.7.4.2.3 Synthetic Webbing Sling Use Criteria. Synthetic webbing slings shall be used in accordance with OEM recommendations. Where a synthetic webbing sling is used in a choker hitch, the total capacity shall be reduced to reflect the efficiency percentages shown in table 14-4. Synthetic webbing slings shall not be used where there is a danger of chemical attack, overheating, or other damage. Slings shall not be exposed to temperatures exceeding 194 degrees F or OEM recommendations whichever is more restrictive. Slings shall not be painted. Exposure to sunlight shall be minimized. Slings shall be stored indoors or in a suitable container. Synthetic webbing slings shall not be substituted for other types of slings shown on rigging sketches without prior engineering approval.

14.7.4.3 Synthetic Roundslings

14.7.4.3.1 Synthetic Roundsling Inspection Criteria. Inspection shall be conducted on the entire length of each sling, including stitches, end attachments, and fittings.

14.7.4.3.2 Synthetic Roundsling Rejection Criteria. Remove from service any synthetic roundsling with the following:

a. Melting, burn marks, charring, or other evidence of heat damage.

b. Snags, punctures, tears, or cuts, that expose any part of the core yarns.

c. Broken or worn stitches in load bearing splices.

d. Excessive wear, abrasion, or embedded abrasive particles.

e. Internal knots, bumps, bulges, or irregularities that can be felt by massaging the sling manually along its length. (Note: A knot in the yarn where the cover is joined may be a termination made by the OEM, which is acceptable.)

f. Cracked, distorted, broken, or excessively worn, pitted, or corroded end fittings.

g. Any other condition that causes doubt as to the strength of the sling.

14.7.4.3.3 Synthetic Roundsling Repairs. Synthetic roundslings shall be repaired in accordance with OEM requirements. No temporary repairs are permitted.

14.7.4.3.4 Synthetic Roundsling Use Criteria. Roundslings shall conform to the following:

a. Roundslings shall be used only in the lifting applications for which they were designed by the OEM.

b. Roundslings shall be used in strict compliance with the OEM's instructions, including using connection hardware (e.g. shackles, links, ring, hook, etc.) sizes recommended by the OEM or the Web Sling and Tie Down Association WSTDA- RS-2.

c. For new roundslings, a certificate of proof test shall be retained in the history file for the life of the sling.

d. Roundslings constructed of yarns other than nylon or polyester (referred to here as “alternate yarn roundslings”) shall be used only with the following additional restrictions:

(1) The certificate of proof test shall include the diameter of pin used during actual proof test.

(2) Alternate yarn roundslings shall not be used over a hook, pin, or shackle that is smaller than the diameter of the pin used during the sling proof test. This requirement also applies to the minimum diameter of curvature at corners of objects to be lifted. The minimum size allowed for use shall be marked on the sling.

Where a synthetic roundsling is used in a choker hitch, the total capacity shall be reduced to reflect the efficiency percentages shown in table 14-4. Slings shall not be used where there is a danger of fraying, chemical attack, overheating, or other damage. Slings shall not be exposed to temperatures exceeding OEM recommendations. Slings shall not be painted. Exposure to sunlight shall be minimized. Slings shall be stored indoors or in a suitable container.

14.8 Shackles, Links, Rings, Swivels, Eye Bolts, Eye Nuts, Turnbuckles, Blocks, Hooks, and Swivel Hoist Rings. Shackles, links, rings, swivels, eye bolts, eye nuts, turnbuckles, blocks, hooks, and swivel hoist rings shall meet the selection, use, and maintenance criteria of ASME B30.26 (B30.10 for hooks), with additions and changes as noted below. For procurement of new equipment, shackles, links, rings, and hooks shall conform to Federal Specification RR-C-271 for material composition. Stainless steel shackles, hooks, and eyebolts shall be forged from austenitic stainless steel meeting the technical requirements of ASTM A314 for material composition. Stainless steel swivel hoist rings shall meet the technical requirements of ASTM A276 (Condition A) for material composition. Alloy steel swivel hoist ring material shall conform to ASTM A322. Swivel and turnbuckle material (including the bolts and pins of anti-friction bearing swivels) shall meet the same technical requirements of Federal Specification RR-C-271 as for shackles. Anti-friction bearing swivels shall be weldless, manufactured from forged or wrought material and have a minimum breaking strength that is five times the manufacturer’s safe working load. Forged bolts and pins procured with jaw-end type swivels and turnbuckles may be made from ASTM A325 Type 1, ASTM A449 Type 1, ASTM A576 or SAE J429 Grade 5. Carbon and alloy steel eyebolts shall meet the minimum requirements for material composition of ASTM A489 or ASTM F541. The weld filler material for new welded master links, welded master link assemblies, welded rings, and welded sling links (pear links) shall be in accordance with AWS specification 5.5 or 5.28. The welded area for all (old and new) master links, master link assemblies, sling links, and rings, shall be RT inspected in accordance with NAVSEA Technical Publication T9074-AS-GIB-010/271 with acceptance criteria to MIL-STD-2035 class 3 for welds prior to initial use. This is a one-time RT inspection.

14.8.1 General Inspection. Shackles, links, rings, swivels, eye bolts, eye nuts, turnbuckles, blocks, hooks, and swivel hoist rings shall be inspected for proper operation and for wear and excessive corrosion (sufficient to cause an orange peel texture after cleaning). Special care shall be taken to check high wear areas of shackles, links, and rings (e.g., center of the shackle bail and pin). Inspect for such conditions as nicks, cracks, gouges, or peening. Cracks shall be removed. Other conditions shall be removed or, for questionable conditions, referred to the activity engineering organization for resolution. Where the component shows evidence of burning or welding, or is visibly bent, spread, twisted, or otherwise distorted, it shall be removed from service and destroyed. Components with damaged threads shall be referred to the activity engineering organization for resolution. The component shall be rejected where normal wear results in a reduction of the original cross sectional dimension of any part exceeding the following or OEM requirements if more restrictive:

a. ASME B30.26 removal criteria shall be used to remove shackles, links, rings, swivels, eye bolts, eye nuts, turnbuckles, blocks, and swivel hoist rings from service.

b. ASME B30.10 removal criteria shall be used to remove hooks from service.

c. Threaded areas - ASME B1.1 may be used as thread inspection criteria.

14.8.1.1 OEM Markings. Equipment lacking the OEM identifying mark shall not be used in weight handling operations. See paragraph 14.3 for re-marking of equipment with worn or hard to read markings.

14.8.2 Repairs. Grinding, to remove defects, shall be the only method used to repair this equipment. Grinding shall follow the contour of the piece, blending with a maximum 1:3 (i.e., maximum rise to run) taper. Dimensions after grinding shall be within the wear limits for the piece being repaired. Grinding to remove defects on areas of a shackle pin where fit-up is critical (e.g., area of shackle pin that contacts roller bearing on dynamometers) is prohibited. Removal of defects to the limit specified above will not require a load test. Correction of defects by use of heat or welding is not permitted. No attempt shall be made to straighten bent or twisted rigging gear.

14.8.3 Use Criteria for Shackles, Links, and Rings. Shackles shall be selected for the resulting tension rather than the weight of the load. In some cases, the tension of one leg of a lift could exceed the weight of the load. Links and rings shall be selected and used in accordance with OEM criteria. Special care shall be used in selecting shackles to be used in multiple leg applications. Different types, grades, or brands of shackles of the same rated load may vary significantly in physical size. This could affect the total leg length and the tension seen by each leg. Round pin shackles shall not be side loaded. If side loading of screw pin or bolt type shackles is required, reduce the rated load by 50 percent unless otherwise specified by the OEM or ASME B30.26. Shackles should be loaded bail-to-bail, whenever possible. For pin-to-pin or pin-to-bail loading, and for all other attachments to a shackle pin, the shackle is considered to be side loaded with the restrictions noted above unless the attachment is centered on the pin. Spacers may be used to ensure shackle pins are loaded in the center.

14.8.4 Shoulder Eye Bolt Use Criteria. Shoulder eye bolts, either shoulder nut (through type) or machinery bolt type, shall be forged steel and shall be used in accordance with the OEM's recommendations, except as noted. Machinery bolt type eye bolts shall be installed with the shoulder flush with the mounting surface. Nut type eye bolts may be used with the shoulder not flush to the mounting surface if approved by the activity engineering organization. When installed with the shoulder flush to the face of the mounting surface, shoulder eye bolts may be used for loading at angles (in the plane of the eye) from the axis of the bolt shank. One or more spacers (of approximately the same outer diameter as the shoulder) may be used under the face of the shoulder to allow for rotational alignment. The total thickness of spacers shall not exceed one thread pitch. The rated load of the eye bolt shall be reduced in accordance with table 14-5 or OEM recommendations. Pulls at angles out of the plane of the eye are not permitted. Nut type eye bolts shall not be installed where plate thickness will not allow full nut contact with at least one external thread exposed. Steel nuts shall be equivalent to SAE J995 grade 5 hex nuts as a minimum. Minimum thread engagement for eye bolts used in threaded holes shall be 1 1/2 times the eye bolt diameter for threaded holes in steel and 2 times the eye bolt diameter for threaded holes in aluminum, or as recommended by the OEM or the activity engineering organization. If screwed into a base material of questionable grade or strength, the thread engagement shall be as recommended by the OEM or the activity engineering organization.

14.8.5 Non-shouldered Eye Bolt Use Criteria. Non-shouldered eye bolts (sometimes referred to as plain pattern or regular nut eye bolts) shall be forged steel and shall be used in accordance with OEM recommendations. Pulls at angles greater than five degrees in the plane of the eye are not permitted. Pulls at any angle out of the plane of the eye are not permitted. Nut type eye bolts shall not be installed where plate thickness will not allow full nut contact with at least one external thread exposed. Steel nuts shall be equivalent to SAE J995 grade 5 hex nuts as a minimum. Minimum thread engagement for eye bolts used in threaded holes shall be 1 1/2 times the eye bolt diameter for threaded holes in steel and 2 times the eye bolt diameter for threaded holes in aluminum, or as recommended by the OEM or the activity engineering organization. If screwed into a base material of questionable grade or strength, the thread engagement shall be as recommended by the OEM or the activity engineering organization.

14.8.6 Turnbuckle Use Criteria. Turnbuckles shall be used in straight (in line) pulls only. Where the danger of rotation exists, the turnbuckle shall be secured by jam nuts. Jam nuts shall be tightened in accordance with OEM instructions.

14.8.7 Hook Use Criteria. Hooks shall be loaded only in the bowl of the hook. Where slings are supported in a hook, the included angle of the slings shall not exceed 90 degrees unless otherwise approved by the activity engineering organization. Hooks shall not be loaded at the point or tip. No side loading of hooks is permitted.

Hooks shall have self-closing latches or the throat opening shall be "moused" (secured with wire, rope, heavy tape, etc.) or otherwise secured to prevent the attached item from coming free of the hook under a slack condition. The following exceptions apply and shall be approved by the activity engineering organization: items where the hook throat is fully

obstructed and not available for manual securing and lifts where securing the hook throat increases the danger to personnel such as forge shop or dip tank work.

14.8.8 Swivel Hoist Ring Use Criteria. Swivel hoist rings may be used at any angle up to 90 degrees with no reduction in rated load when used in accordance with OEM recommendations. They shall be used in threaded holes where they can be installed with the shoulder flush to the face of the mounting surface. The minimum thread engagement shall be 1 1/2 times the diameter of the bolt for steel (or threads fully engaged for swivel hoist rings with thread projections less than 1 1/2 times the diameter of the bolt). Where retaining nuts are approved for use, use only those nuts specified by the OEM. Where a nut is used, the nut shall have full thread engagement. It is critical that the OEM recommended installation torque be applied to the attaching bolt. If screwed into a base material of questionable grade or strength, or that does not allow minimum thread engagement, the installation torque and rated load shall be reduced as recommended by OEM or the activity engineering organization.

TABLE 14-5
Eye Bolt Loading for Shoulder Eye Bolts

Direction of Loading (in the plane of the eye)	**Maximum Allowable Percentage of Rated Load**
Along the axis of the shank to 5 degrees	100
6 to15 degrees	55
16 to 90 degrees	25

14.8.9 Use Criteria for Blocks. When blocks are used in combination so as to provide mechanical advantage (e.g., block and tackle) the assembly shall be fully engineered and tested as a unit, or alternatively, the activity engineering organization shall verify that each component part has been tested and certified to at least its intended WLL. Blocks shall be selected for the direct tension they will see rather than the weight of the load. In most cases, the combined tension imposed on a block will exceed the weight of the load. Care shall be used in selecting blocks to ensure that the sheaves are rated for the size of rope being used. When calculating total line pull, consider the friction imposed by the bushings or bearings used in the block. If the type of bushing or bearing is unknown, 10 percent shall be added to the calculated line pull for each sheave in the block to account for friction. Attachment points for blocks shall be approved by the activity engineering organization. Blocks shall be used only in compliance with OEM recommendations.

14.9 Below the Hook Lifting Devices. Below the hook lifting devices and container spreaders shall be manufactured, operated, maintained, and inspected in accordance with ASME B30.20, ASME BTH-1, and OEM recommendations. Custom designed pallets, platforms, hoppers, containers, skids, and similar weight-handling structures shall be treated as below the hook lifting devices. Commercially available pallets, platforms, hoppers, containers, skids, and similar weight-handling structures are considered part of the load.

14.9.1 Below the Hook Lifting Devices Requiring Assembly and Installation. For those below the hook lifting devices that require assembly and installation (e.g. plate clamps, non-standard rigging slings, special bolt-on lifting fixtures, etc.), OEM assembly and installation and inspection procedures shall be followed. Where assembly and/or installation procedures are unclear or unavailable, the activity engineering organization shall be contacted for evaluation and guidance.

14.9.2 Portable Padeyes/Lugs. Bolt-on portable padeyes/lugs shall be treated as below the hook lifting devices. The attachment fasteners do not require load testing if the minimum size, grade, and number of fasteners are specified by the activity engineering organization or the padeye/lug OEM.

14.10 Portable Manual and Powered Hoists, Lever Operated Hoists, Portable Floor Cranes, Portable Gantry/A-frames, and Cranes Integral to Larger Machine Systems. Portable manual and powered hoists shall be operated, maintained, and inspected in accordance with ASME B30.16 and OEM recommendations. Portable floor cranes shall be operated, maintained and inspected in accordance with ASME PALD (Portable Automotive Lifting Devices) and OEM recommendations. Lever operated hoists shall be operated, maintained, and inspected in accordance with ASME B30.21 and OEM recommendations. Other equipment shall be operated, maintained, and inspected in accordance with applicable ASME B30 (e.g. trolleys maintained and inspected in accordance with ASME B30.11) criteria and/or OEM recommendations. Activity and Navy experience and equipment usage may be used as a basis for modifying OEM recommended inspection and maintenance programs and shall be approved by the activity engineering organization. Portable gantry/A-frames that are disassembled and reassembled shall either be given a subsequent load test, or shall be disassembled and reassembled using a procedure developed by the activity engineering organization and approved by the certifying official. The procedure shall be developed in accordance with OEM recommendations and provide sufficient signoffs and inspections to ensure critical evolutions are completed. Covers and other items normally supplied to allow inspection of components shall be opened or removed. Cranes and hoists are not required to be disassembled for inspection except where problems indicated by these inspections require disassembly for further investigation. However, as a minimum, portable manual hoists shall be disassembled every six annual inspections.

14.11 Portable Load Indicating Devices (Dynamometers, Load Cells, Crane Scales, etc.). Portable load indicating devices shall meet the selection, use, and maintenance criteria of ASME B30.26, with additions and changes as noted below. All steel load bearing elements shall have hardness levels no greater than 40 HRC (does not apply to connecting shackle pins). The hardness level of steel load bearing elements shall be documented by actual hardness tests or documentation from the portable load indicating device manufacturer. The design factor for load indicating devices with steel load bearing members shall be 5:1. The design factor for load indicating devices with aluminum load bearing members shall be 7:1. Some devices have less than these design factors. Such devices shall only be used in the range that ensures the proper design factor. These devices shall be marked or tagged to indicate the reduced maximum rated load. These devices shall be designed to not inadvertently disassemble (e.g., due to rotation of

assemblies below the device while assemblies above the device do not rotate). Attachment of these devices shall be in accordance with OEM recommendations.

14.12 Lashing. Lashing is defined as wire rope, synthetic rope, or synthetic webbing (without permanent end fittings) that is used for wrapping and securing around and/or through an object to provide a point or points from which to lift. Additionally, lashing may be attached to approved structures to serve as a point from which to rig. Lashing shall not be used to substitute for standard rigging components (slings, shackles, etc.) where the use of such rigging is practical. Use of lashing shall, as a minimum, comply with the following:

a. Lashing shall be visually inspected for soundness annually and immediately prior to each use. Records are required for annual inspections only. The inspection/rejection criteria addressed above for slings shall apply to lashing. Lashing shall be inspected after each use and damaged portions removed prior to reuse.

b. Lashing shall be attached tightly enough to prevent the object to be lifted from slipping out, and shall be installed so as not to damage or crush the object (i.e., the object to be lifted shall be structurally sound enough to support its own weight when lifted by the lashing).

c. The use criteria addressed above for slings shall apply to lashing. Where wrapped over sharp corners, lashing shall be provided with adequate protection from chafing or cutting.

d. The lashing configuration shall be such that at least two parts of lashing support the load.

e. The lashing shall be marked with its rated load and re-inspection due date.

f. Forged steel wire rope clips shall be used to secure the ends of wire rope lashing. When wire rope clips are used, the rated load of the lashing shall be reduced by 20 percent or by the reduction due to D/d efficiency, whichever is the greater reduction. Consult clip manufacturer or activity engineering organization before using wire rope clips on plastic coated or plastic impregnated wire rope.

g. Properly tied standard knots or hitches (square knots backed up with half hitches, bowlines, clove hitches, etc.) may be used to secure synthetic rope and webbing lashing. When knots are used, the rated load of the lashing shall be reduced by 50 percent or by the reduction due to D/d efficiency, whichever is the greater reduction.

h. The additional force due to lift angles in the lashing configuration shall be taken into consideration to ensure the rated load (or reduced rated load) of the lashing is not exceeded.

14.13 Insulated Links. Insulated links used as rigging gear shall be visually inspected using guidance from the OEM. The electrical tests specified in appendix E, paragraph 1.5 shall be performed annually.

14.14 Critical Non-Crane Rigging Operations. Critical non-crane rigging operations are defined as rigging tasks that involve a higher than normal level of risk. These operations, if done improperly, could result in personnel injury, significant component damage, or overload to rigging equipment or the supporting structure. These operations include:

a. Rigging that requires precise movement of the load due to tight-tolerance fit-up and rigging gear is the primary method to control alignment. Does not normally include components installed on studs/fasteners, routine installation of pumps, motors, rotors, or when guide pins are used to control alignment.

b. Handling of sensitive electronic cabinets/equipment where overhead clearances are minimal and require special handling arrangements.

c. First time or infrequently performed rigging tasks that require more than normal planning, preparation and/or operational risk management.

d. Rigging of unusually expensive or one-of-a-kind equipment or components.

e. Personnel suspended from rigging.

f. Rigging of hazardous materials such as poisons, corrosives, highly volatile substances, etc. Does not include oxygen, acetylene, propane, diesel fuel, gasoline in cans, or tanks that are properly secured in racks or stands designed for lifting/handling.

g. Other pre-identified rigging operations involving non-routine or specialized handling requirements, or unusual risk.

14.15.1 Requirements. Activities shall identify critical non-crane rigging operations and prepare procedures (including rigging sketches where required) for conducting these operations. Procedures may be standard written instructions or detailed procedures specific to an operation. A rigger supervisor shall review on-site conditions and shall perform a pre-job briefing to ensure all involved personnel understand the required procedure prior to commencing the operation. The rigger supervisor or working leader shall provide periodic oversight of work in progress.

APPENDIX A – GLOSSARY

ACCIDENT. See section 12.

ADJUSTABLE INDEPENDENT LOAD SHUTDOWN DEVICE. A device such as a Load-Moment-Indicator (LMI) or a load cell, independent of a crane's control system, that will stop operation of a crane (or specific function of a crane) when the device senses an overload or impending overload. The device may use the crane's control system or a separate device to stop the operation of the crane or function. The percentage of a crane's or hoist's capacity that initiates the shutdown function can be adjusted by the user.

A-FRAME. On cranes equipped with booms, the structural portion exclusive of the boom above the rotate platform. On derricks, the stationary portion of the structural framing above the foundation or sills.

A-FRAME BLOCK. The lower block of luffing tackle usually integral with the apex of the A-frame. The term luffing block is preferred.

ALTERATION. See section 1.

AREA DEFINITION DEVICES. Limit switches or other similar devices (e.g., proximity switches) typically used on a mobile crane to define a specific area of operation such as "over-the-front" or "over-the-side" as an input to the operator or crane computer.

AUTOMATIC MECHANICAL LOAD-LOWERING BRAKE. See "MECHANICAL LOAD BRAKE."

AUXILIARY HOIST. A separate hoist system of lighter load capacity and usually of higher speed than the main hoist.

BALLAST. A weight (usually fixed) added to the non-rotating portion of a crane or derrick to provide the required stability of the crane or derrick as a whole.

BASKET HITCH. A method of rigging a sling in which the sling is passed around the load and both loop eyes or end fittings are attached to the lifting device.

BEAM. Maximum width of a vessel hull.

BEAM CLAMP. A device that attaches to overhead structural steel used for attaching rigging gear or other hardware.

BELOW THE HOOK LIFTING DEVICE. A device, suspended from a crane’s hook, used for special lifting applications. The device can be a structural, mechanical, magnetic, or vacuum type lifter. For additional descriptions refer to ASME B30.20.

BITT. Double post fitting to which mooring lines from vessels are attached.

BOGIE. A short end truck attached to the end of one girder. This type of end truck is used when more than four wheels are required on a crane due to the design of the runway.

BOLSTER. The load-bearing crossbeam connecting, equalizing, and aligning a pair of parallel trucks on a two-rail track.

BOOM. In crane and derrick usage, an inclined spar, strut, or other long member supporting the hoisting tackle.

BOOM HINGE. The combination of the immediate parts of the rotate structure, boom, and (as most frequently used) the pin about which the boom turns when luffed.

BRAIDED WIRE ROPE SLING. A sling made from braided wire rope slings, the body of which is made up of two or more wire rope slings braided together.

BRAKE. A device used for retarding or stopping motion by friction or power means.

BRIDGE. The main structural and mechanical portion of an overhead traveling crane spanning from one runway rail to the other, consisting of the girders supporting the trolley, the end trucks, the travel drive mechanism, and related parts.

BRIDLE. A sling composed of multiple legs with the top ends gathered in a fitting that goes over the lifting hook.

BROOMING. The straightening of the wires at the end of a wire rope in preparation for pouring a speltered or resin socket.

BUILT-UP HOIST. A hoist that utilizes separate motors, gearboxes, brakes, and drum typically connected by couplings. This is in contrast to a "package hoist", which is a commercially designed and mass-produced hoist characterized by the motor, gearing, brake(s), and drum contained in a single package often connected by the use of c, d, or p-face flanges.

BULL GEAR AND PINION. The large gear (usually attached to the non-rotating part of a crane) and the mating pinion (usually attached to the rotating superstructure) by which the superstructure is caused to rotate.

BULL WHEEL. A relatively large wheel attached to the base of mast and boom of a derrick with a rim shaped to accommodate two cables. By pulling on the cable, the boom is rotated by the bull wheel.

BUMPER. A device fastened to a traveling crane to cushion the impact of striking another crane or a runway stop.

CAB. The compartment containing the controls for cranes or derricks and a seat and shelter for the operator.

CABLE LAID WIRE ROPE SLING. A type of wire rope sling consisting of several wire ropes laid into a single wire rope (e.g., 7X7X7).

CAGE. A partially open circular ring that retains, spaces, and aligns the balls or rollers of an anti-friction bearing, or the rollers or wheels of a live roller path.

CAPACITY. The maximum rated load that a crane is designed to handle. Designated limit of operating characteristics based on specific conditions.

CAPSTAN. A stationary vertical shaft/drum for winding rope or chain for hoisting or hauling purposes.

CENTER STEADIMENT. A pair of male and female castings or weldments, one connected to the fixed portion and the other to the revolving superstructure of a crane, for the purpose of maintaining the position of the center of rotation of the superstructure and of spider and cage of the roller path when used. When a center steadiment is used, the kingpin threads through it.

CHAFING BLOCK. Wood or brass wear plate used to prevent excessive wear or damage to cable.

CHAINFALL. A portable hand chain operated chain hoist used for lifting, pulling or tensioning applications.

CHAIN SLING. An assembly fabricated from Grade 80 or Grade 100 alloy steel chain and attachments (i.e., links, upper and lower hooks) used for lifting when connected to a lifting mechanism at the sling's upper end and when supporting a load at the sling's lower end.

CHOKE ANGLE. The angle between the vertical part and choked part of a sling in a choker hitch. As this angle is decreased, the rated capacity of the sling is reduced.

CHOKER HITCH. A method of rigging a sling in which the sling is passed around the load, then through one loop eye, end fitting, or other device with the other loop eye or end fitting attached to the lifting device.

CIVIL ENGINEERING SUPPORT EQUIPMENT (CESE). The term Civil Engineering Support Equipment is a procurement budget term referring to equipment for which NAVFACENGCOM has the responsibility for determining requirements, procuring, and assigning. The equipment includes automotive vehicles, construction, railway, fire fighting and mobile weight handling equipment. Portal, gantry, jib, floating, derrick, and other facility cranes normally fixed are not classified as CESE.

CLEARANCE. The minimum distance from any part of the crane to the point of nearest obstruction.

CLEAT. A mooring fitting having two horizontal arms to which mooring lines are secured.

COLLECTORS. Contacting devices for collecting current from the runway or bridge conductors. On rotating cranes, a ring and brush assembly that provides a means for conducting electrical power between a stationary and a rotating member or component.

COMMANDING OFFICER. For the purposes of this document, the term is understood to be defined as the person in charge at the activity. This could be a commanding officer, officer in charge, senior non-commissioned officer, director, senior civil servant, or other designated person for a contractor run organization.

CONDUCTOR. A metal bar, shape, or wire used to conduct electric current.

CONSTRUCTION EQUIPMENT. The term "construction equipment" means all mechanical equipment used in the construction, alteration, or repair of buildings, bridges, roads, or other kinds of real property. It includes pile drivers, power shovels and cranes with special attachments, road rollers, tractors, scrapers, plows, street sweepers, sprinkle carts, portable boilers, pumps, and air compressors. It also includes such stationary machines and mechanical apparatus as rock crushing plants, concrete batching and mixing plants, and similar equipment used exclusively in the construction and maintenance of public works. When used as a general term, "construction equipment" includes mobile weight handling equipment.

CONTACTOR. A device, operated other than by hand, for repeatedly establishing and interrupting an electric power circuit.

CONTRACTING OFFICER. For the purposes of this document, the term is understood to be defined as the person with the overall responsibility for contracts at an activity.

CONTROL PANEL. An assembly of electrical components that governs the flow of power to or from a motor in response to signals from master switch, push button station, or remote control.

CONTROLLER. A device or group of devices that serves to govern, in some predetermined manner, the power delivered to the motor to which it is connected.

COUNTERWEIGHT. Weight, usually attached to the rotating part of a crane, to provide stability to the rotating superstructure.

COUPLING LINK. A forged, welded, or mechanically closed link used to join alloy steel chain to a master link or to a master coupling link.

CRANE BASE. The portion of the supporting structure immediately below the rotating portion of a crane. On land cranes, it is a portion of the portal, underbody, carrier, or car body. On floating cranes, it is that portion of the framing extending down to the deck of the pontoon.

CRANE JIB. A boom or arm supporting a trolley or fall block, fitted to swing in sockets attached to a wall or column. The arm is generally fixed in a vertical direction but free to rotate horizontally.

CRANE SAFETY ADVISORY. A directive issued by the Navy Crane Center identifying a deficient condition and corrective actions associated with weight handling or rigging equipment, or weight handling operations.

CRANE STRUCTURE. Jib cranes, bridge cranes, monorails, and davits that do not have permanently mounted hoists.

CREEP SPEED. A very slow, constant, continuous, fixed rate of motion of the hoist, trolley, or bridge. Usually established at 1 to 10 percent of the normal full load speed.

CUSHIONED START. An electrical or mechanical method for reducing the rate of acceleration of travel motion.

D/d RATIO. The ratio of the diameter of the pin, hook, or other object a wire rope lashing or sling is bent around, divided by the diameter of the wire rope sling.

DAVIT. A type of jib crane traditionally associated with raising and lowering a boat out of and into the water. It is also traditionally in the form of a gooseneck design. A 'crane davit' is a davit mounted on a crane typically used for crane maintenance purposes.

DEAD END. The fixed end of a rope or cable on a crane, derrick, or hoist.

DEAD LOADS. The loads on a structure that remain in a fixed position relative to the structure. On a crane such loads include the girders, footwalk, cross shaft, drive units, panels, etc.

DIAPHRAGM. A plate or partition between opposite parts of a member, serving a definitive purpose in the structural design of the member.

DRAFT. Depth of vessel hull below the water line.

DRIFT. Motion after the power is cut off. Also means the change of hook radius due to load.

DRIFT POINT. An operating position of a motor control circuit in which all power is cut off from the motor but the electric brake remains energized allowing the driven load to "drift" or "coast."

DRIVE. The assembly of the motor and gear unit used to propel the bridge or trolley.

DRUM. The cylindrical member around which the hoisting ropes are wound for lifting or lowering the load.

DUMMY CAB. An operator's compartment or platform on a pendant or radio controlled crane, having no permanently mounted electrical controls, in which an operator may ride while controlling the crane.

DUTY. A requirement of service that defines the degree of regularity of the load. It is determined by the kind of loads to be handled and the facility to be served.

DUTY CYCLE. A complete operation from preparation for lifting a load to its final deposition, or a series of such movements, the kind, amount, sequence, frequency, duration, and period of work performed. A factor in determining mechanical, control, and electrical duty classification and the design ratings of engines, generators, motors, gearing, clutches, brakes, bearings, and other parts.

DYNAMIC BRAKING. Braking a driven load by connecting an electrical control and motor circuit so that the motor becomes a generator under an overhauling load, absorbing energy from the load and returning it to the power input line, or wasting it as heat in special resistance, or both.

DYNAMIC LOWERING. A method of control by which the hoist motor is so connected in the lowering direction, that when it is over-hauled by the load, it acts as a generator and forces current either through the resistors or back into the line.

DYNAMOMETER. A system intended to aid the operator/rigger by continuously monitoring the load and warning to an approach to an overload condition. Typically, a calibrated scale between the hook of a crane and a load used to measure load weight.

EDDY CURRENT BRAKE. A brake consisting of a stationary magnetic field, usually variable, and a metallic rotor through which braking forces are exerted electromagnetically by the induced eddy currents in the rotor, the rotor absorbing the energy of motion, and dissipating it as heat. An eddy current brake can slow down but cannot stop a moving load.

ELECTRIC CONTROL OR CONTROLLER. A device or group of devices that serve to govern, in a predetermined manner, the electric power delivered to the apparatus to which it is connected. Some of the basic functions are the control of acceleration, retardation, line closing, and reversing.

ELECTRICAL BRAKING SYSTEM. A method of controlling crane motor speed when in an overhauling condition, without the use of friction braking.

ENCLOSED CONDUCTOR(S). A conductor or group of conductors substantially enclosed to prevent accidental contact.

ENCLOSURE. A housing to contain electrical components, usually specified by a NEMA classification number.

END APPROACH. The minimum horizontal distance, parallel to the runway, between the outermost extremities of the crane and the centerline of the hook.

END ATTACHMENTS. Attachments (i.e., hooks, shackles, etc.) used for connecting a sling to a load.

END FITTINGS. Terminal hardware on the end of a sling.

END TIE. A structural member other than the end truck that connects the ends of the girders to maintain the squareness of the bridge.

END TRUCK. The unit consisting of truck frame, wheels, bearings, axles, etc., that supports the bridge girders.

ENDLESS WIRE ROPE SLING. A wire rope sling made endless from one continuous length of wire rope with the ends joined by one or more swaged fittings.

EQUALIZER. An engineered device that automatically adjusts for equal distribution of the load.

EQUALIZER BEAM. A beam or other fabricated structure used between two hooks or other lifting attachments, on one or more cranes, to share the load between lifting attachments. The load may be equally or unequally applied, based on the rated capacities of the hooks or other lifting attachments from which the equalizer beam is suspended.

EYE PIN. The pin used to attach an eye hook to a crane's hook block, e.g., to an overhaul ball assembly on a whip hoist.

FAIL-SAFE. A provision designed to automatically stop or safely control any motion in which a malfunction occurs.

FAIRLEAD. A group of pulleys or rollers used in connection with a winch or similar apparatus to permit the cable to be reeled from any direction.

FENDER. A protective system installed around the hull of a floating vessel.

FIXED AXLE. An axle that is fixed in the truck and on which the wheel revolves.

FLEET ANGLE. The angle formed by the lead of a rope at the extreme end of a drum with a line drawn perpendicular to the axis of the drum through the center of the nearest fixed sheave (expressed in degrees).

FLEETING SHEAVE. A sheave that moves along its supporting shaft or pin.

FLOAT. In connection with portal crane trucks, float is the total amount of lateral movement of the pairs of trucks on both sides of a crane that is permitted by their construction.

FLOOR-OPERATED CRANE. A crane that is pendant or radio controlled by an operator on the floor or an independent platform.

FLOUNDER PLATE. A triangular plate with a hole on top and two holes on the bottom, used to distribute a load.

FOOTWALK. The walkway with handrail and toe boards attached to the bridge or trolley for access purposes.

FREEBOARD. The distance from the main or weather deck on a floating vessel to the water line.

FULL MAGNETIC CONTROL OR CONTROLLER. An electric control having all of its basic functions performed by electromagnets.

GAGE. For portal and gantry crane track, the center to center distance between rails. For railroad track, the clear distance between rail heads.

GANTRY. A framework supported at each end so that it spans a distance, used for carrying a traveling crane. For mobile cranes, gantry refers to the structural frame, extending above the superstructure (rotating upper frame), to which the boom support ropes are reeved.

GANTRY CRANE. A crane whose bridge is rigidly supported on two or more legs running on fixed rails or other runway.

GIRDERS. The principal horizontal beams of the crane bridge that support the trolley and are supported by the end trucks.

GROMMET WIRE ROPE SLING. A wire rope sling that is an endless circle fabricated from one continuous strand of wire rope.

GROUND FAULT. An accidental conducting connection between the electrical circuit or equipment and the earth or some conducting body that serves in place of the earth.

GUDGEON. In crane usage, a vertical pin about which a travel truck (or its associated equalizers or bolsters) pivots in a horizontal plane and on which the weight of the truck usually bears.

GUDGEON PIN. In crane usage, a horizontal pin connected to a gudgeon that carries the weight of a crane to the trucks or equalizers, and on which the latter pivot in a vertical plane and frequently float.

GYPSY HEAD. A small, auxiliary revolving drum at the side or top of a winch.

HAND TUCKED SPLICE. A loop or eye formed in the end of a rope (wire, synthetic or natural fiber) by tucking the end of the strands back into the main body of the rope in a prescribed manner.

HEADACHE BALL. A heavy weight attached above the hook on a single line or whip hoist to provide sufficient weight to lower the hook when unloaded.

HEALTH CARE PROFESSIONAL. Health care professional means a person who is licensed, certified, and/or registered, in accordance with applicable State laws and regulations, to perform physical examinations. The term includes, but is not limited to, doctors of medicine, doctors of osteopathy, physician's assistants, advanced practice nurses, and doctors of chiropractic.

HEEL. The transverse inclination of a vessel due to the action of the waves, wind, unsymmetrical weight distribution or other temporary force.

HOGLINE. Boom stay cable attached to the equalizer bar.

HOIST. A machinery unit that is used for lifting and lowering a load.

HOIST EQUALIZERS. Hydraulic motors controlled by switches in the operator's cab that drive an equalizer sheave to adjust sling spacing and the amount of wire rope wraps on hoist drums on certain types of mobile boat hoists.

HOIST ROLL BACK. An inherent condition due to insufficient motor torque, that allows a hoisted hook load to lower when the hoist controller is moved initially into the hoisting position or as the controller is returned to neutral.

HOIST ROLL UP. On solid state controlled hoists, the distance a hoisting drive block rises when the controller is placed in the lowering direction. This roll up is due to torque proving circuits in the hoist direction that ensure the drive is capable of restraining a load before releasing the holding brakes.

HOLDING BRAKE. A brake that automatically prevents motion when power is off.

HOOK APPROACH. The minimum horizontal distance between the center of the runway rail and the hook.

HOOK LATCH. A device used to bridge the throat opening of a hook.

HOOK ROLLER. A roller attached to the underside of the rotate platform, rolling under a projecting flange (usually attached to the lower roller path) to prevent the rotate platform from overturning.

HOOK, DOUBLE-BARBED. A hook with two symmetrical barbs from a common shank.

HOTEL POWER. Electrical power provided by an off-crane source utilized to run ancillary equipment on the crane such as lighting, air compressors, computer drives, etc. This power is not used or intended to be used to run crane drives such as hoist, travel, or rotate. This type of power is referred to in some drawings or manuals as 'ancillary shore power'.

HYDRAULIC BRAKE. A brake that provides retarding or stopping motion by hydraulic means.

IDLER SHEAVE. A sheave used to equalize tension in opposite parts of a rope. Because of its slight movement, it is not termed a running sheave.

IDLER SPROCKET. A freely rotating device that changes the direction of the load chain.

IMPACT ALLOWANCE. Additional hook load assumed to result from the dynamic effect of the live load.

INTEGRAL LIFTING ATTACHMENTS. Lifting attachments that are fabricated or formed (welded, cast, or molded) as integral parts of (i.e., permanently attached to) the component or equipment to be lifted. Internal threads in tapped holed are considered integral lifting attachments.

INTERLOCK. A device that permits the operation of equipment only after pre-established conditions have been fulfilled, and stops the operation when conditions change.

INSULATED LINK. A component normally installed between the hook and the lifting wire rope or lower load block to prevent the flow of electrical energy. Insulated links are primarily used when there is the possibility of contact between weight handling equipment and electrified power lines or when radio frequency energy may collect on the weight handling equipment structure. Insulated links are used extensively in the handling of ordnance.

JOGGING (NOTCHING, INCHING). The rapidly repeated closure of a circuit to start a motor from rest for the purpose of accomplishing small movements of the driven machine.

KINGPIN (CENTERPIN). A vertical steel pin or hollow tube located at the center of rotation of a crane for the purpose of aiding in preventing overturning of the superstructure and also for maintaining the center of rotation in position. (See "Center Steadiment.")

LASHING. Wire rope, synthetic rope, or synthetic webbing (without permanent end fittings) that is used for wrapping and securing around an object to provide a point or points from which to lift the object, or attaching to an approved structure to serve as a point from which to rig.

LATCHING BOOM CRANE. A type of hydraulic telescoping boom crane where the telescoping sections can latch or pin in place at various boom lengths. The crane may or may not have a telescoping capacity or may have different capacities for extension and retraction.

LAY LENGTH OF WIRE ROPE. The distance along a wire rope in which a strand makes one complete turn around the rope’s center.

LEVER OPERATED HOIST. A manually operated hoist (utilizing chain, wire rope, or synthetic webbing) with ratchet, pawl, and friction brake used for lifting, pulling, and tensioning applications.

LIFT. Maximum safe vertical distance through which the hook, magnet, or bucket can move.

LIFT CYCLE. Single lifting and lowering motion (with or without load).

LIFTING DEVICES. Buckets, magnets, grabs and other supplemental devices, the weight of which is to be considered part of the rated load, used for ease in handling certain types of loads.

LIFTING LUG. An appendage affixed as an integral or non-integral part of the component and used for the attachment of weight handling equipment.

LIMIT SWITCH. A device designed to cut off power automatically at or near the limit of travel for the crane motion or a generic device designed to provide feedback to the control system with respect to the relative state or position of various functions of a crane drive or other system.

LIST. The angle between the horizontal plane and roller path plane measured athwartships for floating cranes.

LIVE BOOM. A boom that is lowered by gravity solely under the control of the boom hoist drum brake.

LIVE LOAD. A load that moves relative to the structure under consideration.

LOAD BEARING PARTS. See section 1.

LOAD BRAKE. A brake that provides retarding force without external control.

LOAD CELL. The load measuring device in a system intended to aid the operator or rigger by continuously monitoring the load and warning to an approach to an overload condition.

LOAD CONTROLLING PARTS. See section 1.

LOAD CYCLE. One lift cycle with load plus one lift cycle without load.

LOAD SPROCKET. A hoist component that transmits motion to the load chain.

LOAD WARNING DEVICE. A device such as a load moment indicator or a load cell, that may or may not be independent of a crane's control system, that will warn the operator of an impending overload to the crane or function but does not stop operation of the crane or function. The device may or may not be adjustable.

LUFFING. A radial in and out movement of the load by the raising or lowering of a crane or derrick boom.

MAGNETIC CONTROL. A means of controlling direction and speed by using magnetic contactors and relays.

MAGNETIC LIFTER (CLOSE PROXIMITY OPERATED). A below the hook lifting device that uses a lifting magnet in such a fashion that the operator manually positions the magnet on the load, and manually guides the load during a lift.

MAGNETIC LIFTER (REMOTE OPERATED). A below the hook lifting device that uses a lifting magnet in a way that does not require an operator or other personnel to be in close proximity to the magnet or load while in use.

MAINTENANCE LIFT. A lift made while the crane is out of service that does not support production, but is for performing maintenance or troubleshooting on the crane itself such as calibration of LMI's/LID's, setting of hydraulic relief valves, lifting and setting of test weights. It does not include lifting of supplies or equipment supporting crane maintenance.

MAIN HOIST. Hoist system used for raising and lowering loads up to maximum rated capacity of the crane.

MAJOR DEFICIENCY. See section 1.

MANUAL CONTROL OR CONTROLLER. An electric control having all of its basic functions performed by hand.

MASTER LINK. Forged or welded steel link (round, pear or oval in shape) used to support all member(s) (legs) of an alloy steel chain or wire rope sling.

MASTER COUPLING LINK. A coupling link used as an intermediate link to join two or more alloy steel chains to a master link.

MASTER SWITCH. A switch, usually in low current and low voltage circuits and operated by a crane or hoist operator, that dominates the operation of other control devices most often of greater current and voltage, such as contactors, relays, and other magnetically operated devices.

MATERIALS HANDLING EQUIPMENT. This term includes all self-propelled and conveyor equipment normally used in storage and materials handling operations in and around warehouses, shipyards, industrial plants, airfields, magazines, depots, docks, terminals and on board ships. Included are warehouse tractors, forklift trucks, rough terrain forklift trucks, platform trucks, straddle carrying trucks, industrial cranes and automated material handling systems. Also included are driverless tractor systems, stock selector systems, storage retriever systems, stacker crane systems, pallet movement systems, and intra-depot transporter systems for warehouse applications.

Excluded are construction and gantry/portal cranes, overhead electric traveling cranes, and non-portal shipboard conveyor systems. See SECNAVINST 4440.31.

MECHANICAL LOAD BRAKE. An automatic type of friction brake used for stopping or controlling loads in the lowering direction. This unidirectional device requires torque from the motor to lower a load but does not impose additional load on the motor when lifting a load.

MECHANICAL SPLICE. A loop or eye formed in the end of a wire rope (either turn-back or flemish eye) with one or more metal sleeves pressed or swaged over the wire rope junction.

MESSENGER TRACK. A horizontal member, mounted along a handrail or girder, supporting movable carriers from which festooned wires are hung.

MOBILE BOAT HOIST. A straddle type self-propelled or towed type carrier crane consisting of a steel structure supported by wheels designed to straddle, carry, and lift vessels in and out of the water.

MODIFICATION. See alteration.

MULTI-PART SLING. A sling with more than one component rope in the body. The component ropes may be cable laid or braided.

MULTI-PURPOSE MACHINE. A machine that is designed to be configured in various ways, at least one of which allows it to hoist (by means of a winch or hook) and horizontally move a suspended load. This includes machines that are sometimes referred to as telescopic handlers or rough terrain forklifts.

NON-INTEGRAL ATTACHMENTS. Removable attachments (eye bolts, bolted lifting lugs, etc.)

NOTCH. Movement across or to mechanical notches that indicates by feel of the master switch handle the various speed points and that automatically centers the handle at the contact points.

OEM. The original equipment manufacturer or a company that has obtained the rights to the equipment design or manufacture.

OPERATOR'S CAB. The operator's compartment from which movements of the crane are controlled. May be specified as open, having only sides or a railing around the operator, or enclosed, complete with roof, windows, etc.

OUTRIGGERS. Extendable or fixed members attached to the mounting base, that rest on supports at the outer ends used to support the crane. Outriggers are capable of supporting the entire weight of the crane and load.

OVERHEAD ELECTRIC TRAVELING CRANE. An electrically operated machine for lifting, lowering and transporting loads, consisting of a movable bridge carrying a fixed or movable hoisting mechanism and traveling on an overhead runway structure.

OVERLOAD. Any load greater than the rated load.

OVERLOAD PROTECTION (OVERCURRENT). A device operative on excessive current to cause and maintain the interruption or reduction of current flow to the equipment governed.

PACKAGE HOIST. A commercially designed and mass-produced hoist characterized by the motor, gearing, brake(s), and drum contained in a single package often connected by the use of c, d, or p-face flanges. This is in contrast to a “built-up” hoist, which utilizes separate motors, gearboxes, brakes, and drum typically connected by couplings.

PADEYE. A portable or fixed eye secured to structural members or through holes in structural members, used for attachment of rigging gear.

PARKING BRAKE. A friction brake for a bridge or trolley, automatically applied when power to the crane is interrupted.

PAWL. A gear locking device.

PENDANT PUSH BUTTON STATION. A device suspended from the crane permitting operation of the crane from the floor or other remote location.

PERFORMANCE. The effective operation of any device. The manner or behavior of equipment in operation.

PERSONNEL PLATFORM. A platform used for lifting personnel with cranes. It is either suspended from the crane by wire rope or chain slings, or directly attached to the crane. It has no installed motion controls for the platform itself.

PITCH DIAMETER. Distance through the center of a drum or sheave from center to center of a rope passed about the periphery.

PIVOT TRUNNION SYSTEM. A pivot system between the front columns and top beam on certain types of mobile boat hoists to minimize stresses in the machine structure when traveling over uneven terrain.

PLUGGING. Creating a braking motion with an electric or hydraulic motor by applying energy to reverse the motor.

PORTABLE FLOOR CRANE. A self contained lifting device characterized by a pair of laterally spaced legs, an upright mast, pivoting boom with a boom extension, and hook which is used to raise and lower loads.

PORTABLE GANTRY/ A-FRAME. A portable structure, similar to an overhead bridge crane, except that the bridge for carrying the trolley is rigidly supported on two or more legs usually with wheels.

PORTABLE LOAD INDICATOR. A portable device or system intended to aid the operator or rigger by continuously monitoring the load weight and providing a visual indication of the total load. Some devices may also provide audible warning to the approach of an overload condition.

PORTABLE HOIST. A manual or powered hoist that is mounted by means of an upper hook. The source of power is irrelevant. All other means of mountings (e.g. lug, trolley) are considered a permanent hoist.

PROTECTIVE PANEL. An assembly containing overload and undervoltage protection for all crane motions.

RACK. A bar, straight or curved, with teeth or one face for gearing to a pinion, worm, or other mechanism.

RADIUS. The horizontal distance from a projection of the axis of rotation to the ground or water line, before loading, to the center of the hoist line(s) with load applied ("radius" and "reach" as used for cranes are synonymous).

RATING. Designated limit of operating characteristics based on specific conditions.

REACTOR. A device that introduces reactance into an AC circuit for such purposes as motor starting, paralleling transformers, and control of current.

REEVING ARRANGEMENT. A plan showing the path that a rope takes in adapting itself to all sheaves and drums of a piece of equipment.

REGENERATIVE BRAKING. In crane and hoist usage, braking a driven load that becomes overhauling by virtue of overspeed beyond the synchronous speed of an AC motor, the motor then becoming a generator that absorbs energy from the overspeeding load and returns it to the power input line.

RELAY. A device that is operative by a variation in the conditions of one electric circuit to effect the operation of other devices in the same or another electric circuit.

REMOTE OPERATED CRANE. A crane controlled by an operator not in a pulpit or in the cab attached to the crane, by any method other than pendant or rope control.

RING. A forged or welded steel link used to support all member(s) (legs) of a sling assembly.

ROLLBACK. See "HOIST ROLL BACK."

ROLLER CLEARANCE. Distance between rollers and roller path on portal and floating cranes that have a balance deck platform design. Roller clearance is not necessarily indicative of crane instability, but can be the result of normal dynamic undulation of the roller path or the roller path supporting members, undersized rollers, misaligned roller axles, roller race connectors, rail splices, etc.

ROLLER LIFT-OFF. Roller clearance comprising approximately 60 percent or more rollers in the roller path quadrant under the counter weight with the boom at maximum radius and maximum load or the quadrant under the boom heel pin with the boom at minimum radius and no load.

ROLLER PATH. The circular rails or flat tracks or conical surface tracks on which rollers or wheels travel.

ROTATE BEARING. A large, precision machined ring bearing connecting the stationary and rotating portions of portal, floating, and mobile cranes.

ROTATE PLATFORM (TURNTABLE). That part of a rotating crane immediately above the roller path supporting the machinery, the machinery house, and cab.

RUNNING SHEAVE. A sheave that rotates as the hook is raised or lowered.

SAFETY DEVICE. See section 1.

SEMI-MAGNETIC CONTROL OR CONTROLLER. An electric control having only a part of its basic functions performed by electromagnets.

SERVICE BRAKE. A friction brake for bridge or trolley, automatically or manually applied, used during normal operation to apply a retarding force.

SERVICE CLASSIFICATIONS FOR OVERHEAD TRAVELING CRANES. For procurement purposes, the Crane Manufacturers Association of America has established the following classifications:

Class A - Standby Service
Class B - Light Service
Class C - Moderate Service
Class D - Heavy Duty Service
Class E - Severe Service
Class F - Continuous Severe Service

SERVICE FACTORS. Multipliers applied to ratings to adapt them to conditions of service other than those for which the ratings were established.

SHACKLE. A U-shaped fitting with a pin across the throat used as connection between lengths of a chain or to attach other fittings.

SHALL. As used in this publication, means the requirement is mandatory.

SHORE POWER. Electrical power provided by an off-crane source utilized to run crane drives such as hoist, luff, travel, or rotate.

SHOULD. As used in this publication, means recommended guidance.

SHUNT. A conductor of one of many forms joining two points in a circuit to form a parallel or bypass circuit through which a portion of the current may pass for the purpose of regulating the relative electrical characteristics of various portions of the circuit.

SINGLE LEG VERTICAL HITCH. A method of supporting the load by a single, vertical part or leg of the sling.

SKYLIGHT. A built-up frame having glass fitted in the top and installed over a deck opening for the purpose of admitting light and air to compartment below.

SLING. An assembly used for lifting when connected to a lifting mechanism at the sling's upper end and when supporting a load at the sling's lower end.

SLING ADJUSTMENT SYSTEM. Hydraulic cylinders controlled by switches in the operator's cab on certain types of mobile boat hoists that move certain hoists fore and aft to position slings in the optimum position under boats to be lifted.

SLOW SPEED MICRODRIVE. Normally an alteration to main hoist of portal cranes. Used in specialized applications where very slow speeds and high degree of control are required.

SMOOTH. Motion without any hesitation, abnormal vibration, binding, gross shimmy, or irregularity.

SNATCH BLOCK. A single or multi sheave block that opens on one side to allow running the wire or fiber rope over the sheave without having to thread the end through the block.

SPEED POINT. One of a series of circuits and associated electrical control devices that control the various speeds and directions of a motor.

SPELTERED SOCKET. A type of connection for rope in which molten zinc is used.

SPIDER. The radial member connecting the roller cage with the center steadiment to maintain the true circular path of the rollers and to resist the outward thrust of the rollers.

SPREADER. A beam or bar used for holding apart two or more lifting slings that suspend a load having two or more lifting attachments. A spreader may be suspended from a crane or hoist using one or more lifting attachments.

SPUD LOCK. A device consisting of a spud and socket used for the purpose of preventing motion of the rotating structure of a crane while idle.

STABILIZERS. Extendable or fixed members attached to the mounting base to increase the stability of a crane, but that may not have the capability of relieving all of the weight from wheels or tracks.

STOP. A fixed obstruction designed to contact the bumper of a traveling crane or trolley.

SWIVEL EYE BAR. An extension of a hook shank on an articulated duplex sister hook that is pinned to the hook.

SWIVEL HOIST RING. A threaded fixture used as an attachment device for lifting loads, similar to a shouldered eye bolt, but capable of swiveling 180 degrees and rotating 360 degree with no reduction in capacity.

SYNTHETIC ROPE SLING. A sling manufactured from a synthetic fiber (nylon, polyester, etc.).

SYNTHETIC ROUNDSLING. An endless sling manufactured from synthetic fiber yarns (nylon, polyester, etc.) covered by a tubular jacket.

SYNTHETIC WEBBING SLING. A sling manufactured from nylon or polyester webbing.

TACKLE BLOCK. A block designed to be used with natural and synthetic fiber rope. The block consists of metal sheaves with either wood or metal side plates. The side plates and sheaves may or may not be secured with cheek straps. The block is lighter and has less capacity than a wire rope block.

TEST LOAD. Any load or force used for testing, the magnitude of which is known within acceptable tolerances and is so certified by the facility test director. Test loads shall be expressed in pounds.

TOPPING BLOCK. The upper block of luffing tackle. The term upper luffing block is preferred.

TRAVEL. The horizontal, usually straight-line motion, of a crane or its parts (such as a trolley).

TRIM. Angle between the horizontal plane and roller path plane measured fore and aft.

TROLLEY. A wheeled carriage designed to support and transport a suspended load. The term includes all integral associated equipment for hoisting, and propelling the load.

TRUCK. The complete unit of frame, wheels, integral driving, and associated equipment that supports a traveling crane or traveling portion of a crane, such as a trolley.

TURNBUCKLE. A device normally attached in line with a sling(s) for making limited adjustments in length, by turning a threaded barrel attached to right hand and left hand threaded end connections.

TWO-BLOCK. Over-hoisting by direct hoisting or indirectly by lowering the boom or telescoping the boom so that the hook block and the upper sheave assembly or trolley/hoist frame come in contact resulting in possible damage to the structure, parting of the hoist line, and dropping of the load.

VACUUM LIFTER. A below the hook lifting device for lifting and transporting loads in a fixed attitude using a vacuum as the holding force.

VALIDATION. Second level approval of the activity certification of cranes used in special purpose service by the Navy Crane Center, normally consisting of complete record review, independent condition inspection, and verification of the proper conduct of the crane condition inspection and load test performed by the activity.

VANGS (VANG LINES). Lines attached to each side of a derrick boom near the outer end and to tackle on the base, ground, or pontoon by means of which the boom is rotated from one side to the other.

WEATHERPROOF. Tightness such that exposure to the weather will not interfere with its successful operation.

WEIGHT HANDLING EQUIPMENT. Weight handling equipment consists of cranes (e.g., portal cranes, mobile cranes), rigging gear (e.g., slings, shackles), and associated equipment (e.g., portable hoists, dynamometers).

WHEELBASE. The distance between the centers of the most forward and most aft wheels on a traveling crane. On overhead traveling cranes with more than a total of four bridge wheels, the distance between the centers of the forward group of wheels and the aft group of wheels.

WHIP HOIST. A hoist using a single line to the hook without intervening tackle. Used for light loads and fast speeds.

WIND LOCK. A means, usually a spud lock, for preventing the motion of a crane that might be caused by the action of the wind.

WIRE ROPE BLOCK. A block that is equipped with cheek straps, which provide strength between the end attachments and sheave center pins. The block is well suited for heavy loads and high speed applications.

WIRE ROPE SLING (PENDANT). A sling fabricated from wire rope usually fabricated with an eye at each end.

(INTENTIONALLY LEFT BLANK)

APPENDIX B - TYPES OF WEIGHT HANDLING EQUIPMENT

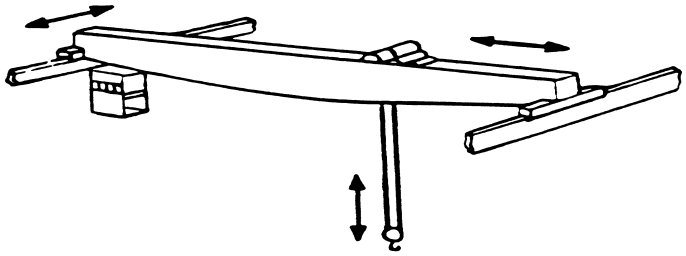

TOP RUNNING BRIDGE/TOP RUNNING TROLLEY

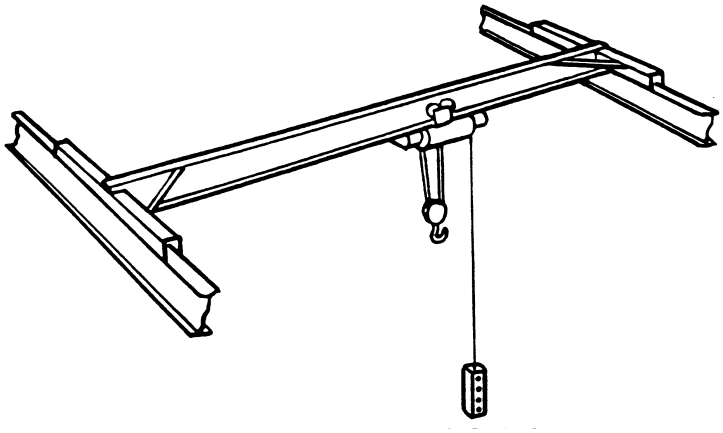

TOP RUNNING BRIDGE/UNDERHUNG TROLLEY

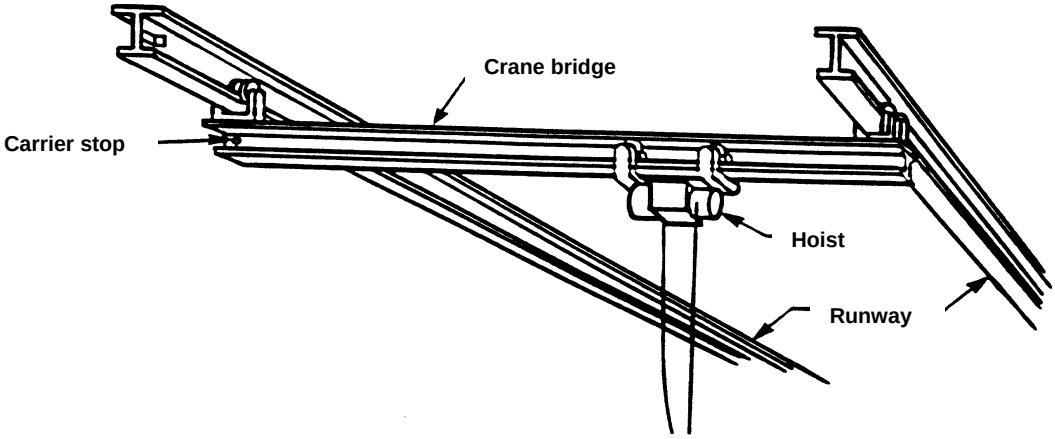

UNDERHUNG BRIDGE/UNDERHUNG TROLLEY

Overhead Traveling. A crane with a single or multiple girder traveling movable bridge carrying a movable or fixed hoisting mechanism and traveling on an overhead fixed runway structure. Operation is limited to the area between the runways. May be top running or underhung.

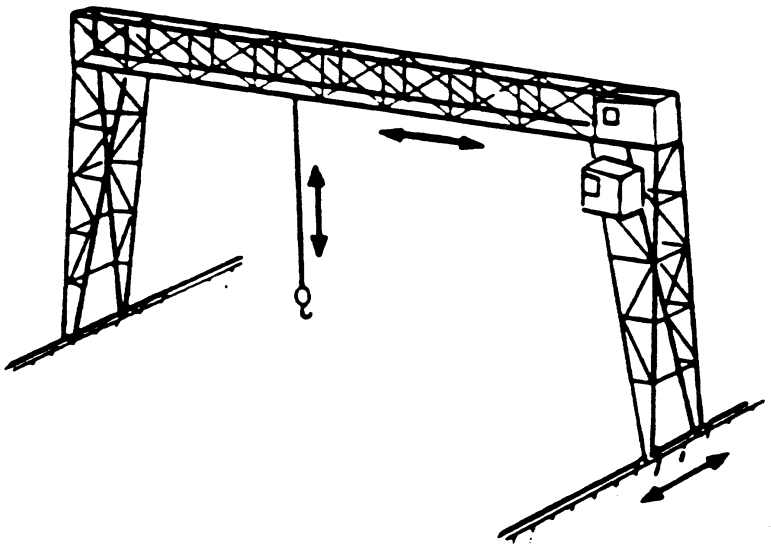

GANTRY CRANE

Gantry. A crane similar to an overhead traveling crane, except that the bridge for carrying the trolley or trolleys is rigidly supported on two or more legs, traveling on elevated or ground level rail systems.

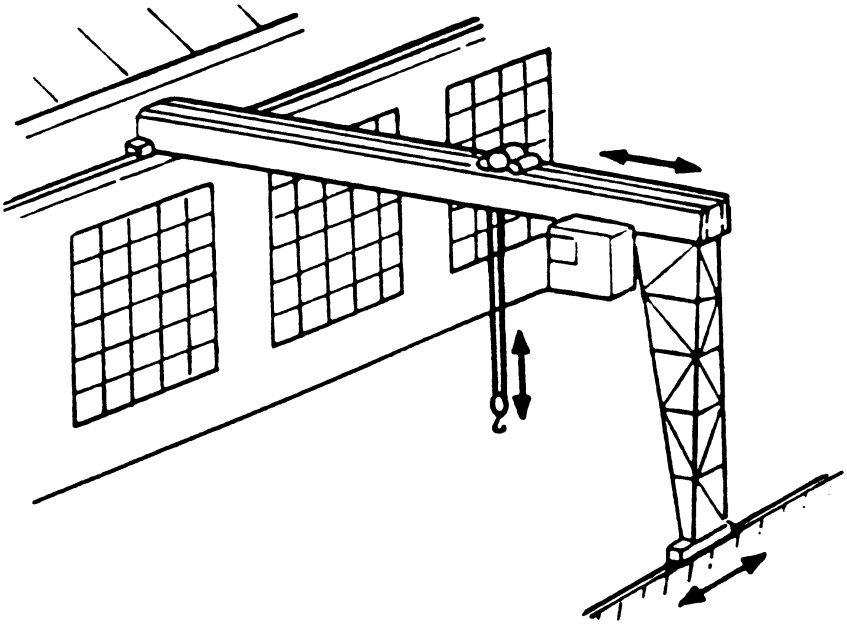

SEMIGANTRY CRANE

Semigantry. A crane with one end of the bridge rigidly supported on one or more legs and the other end supported by a truck running on an elevated rail or runway.

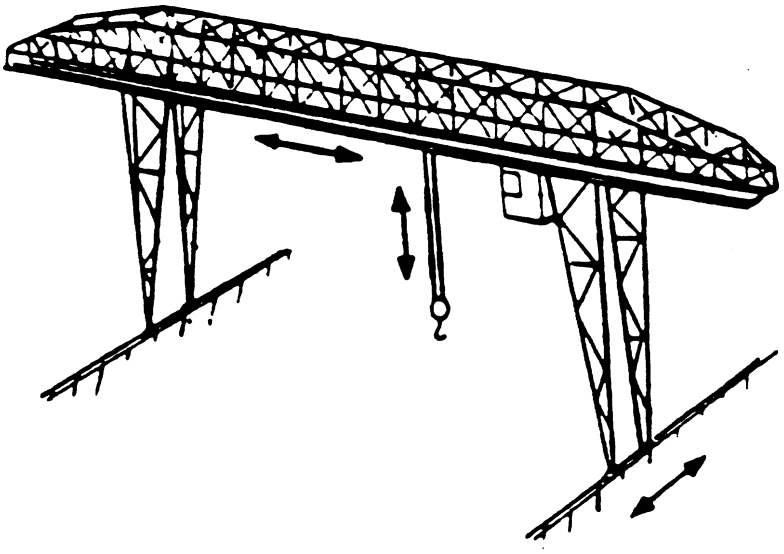

CANTILEVER GANTRY CRANE

Cantilever. A gantry crane in which the bridge gantry girders or trusses extend transversely beyond the crane runway on one or both sides.

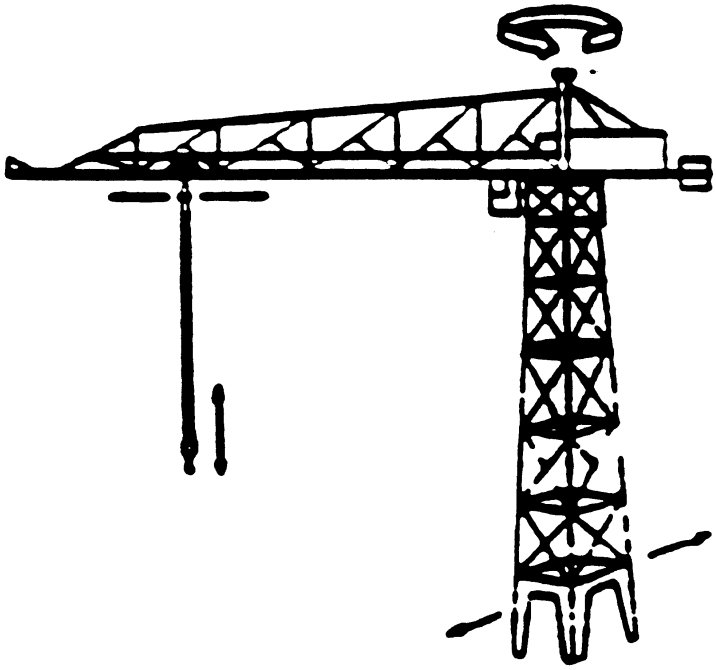

HAMMERHEAD CRANE

Hammerhead. A crane with rotating counterbalanced cantilever boom equipped with one or more trolleys and supported by a pintle or turntable on a traveling or fixed tower.

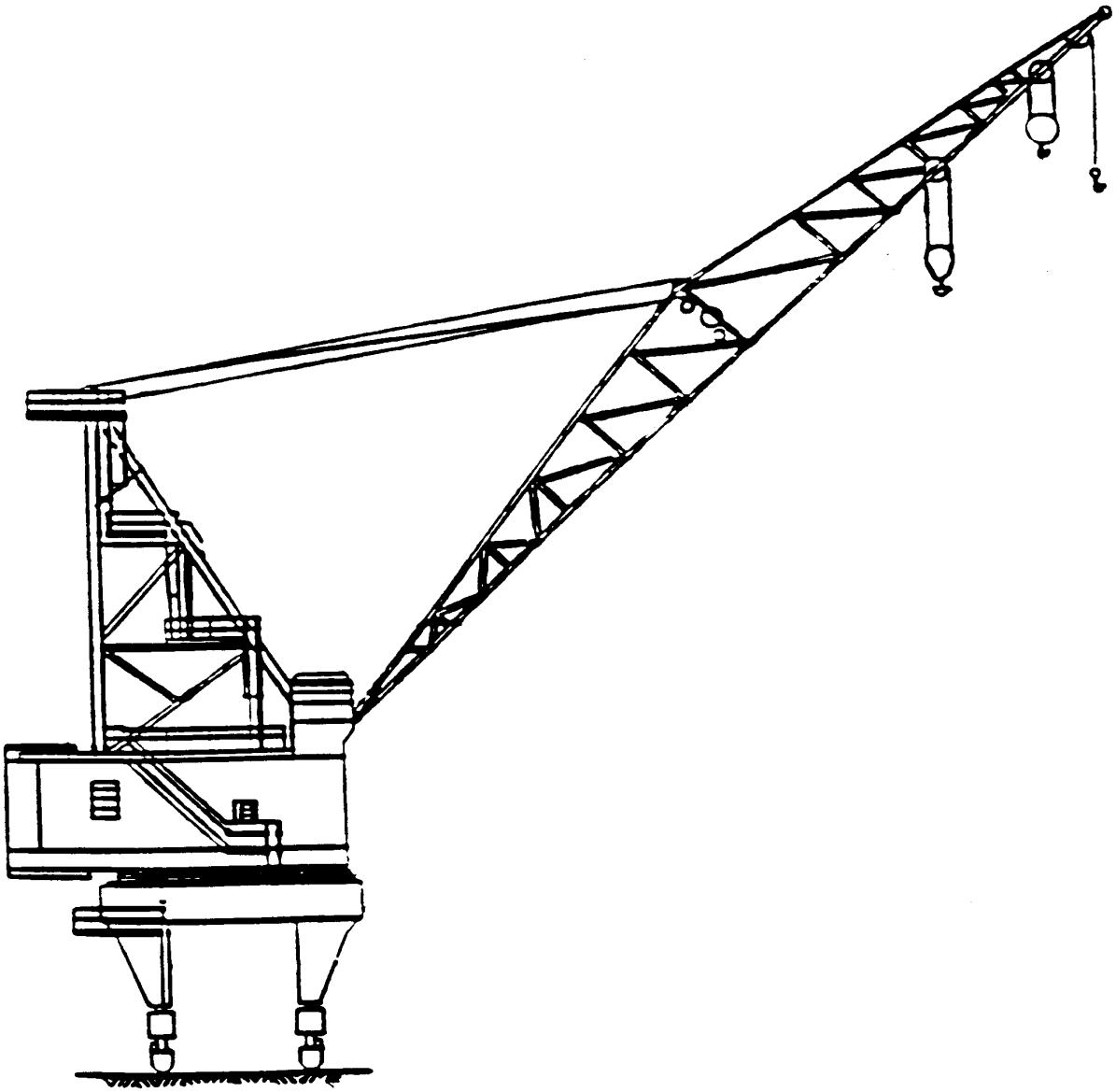

PORTAL CRANE

Portal. A crane consisting of a rotating superstructure with operating machinery and boom mounted on a gantry structure, usually with a portal opening between the gantry columns or legs for traffic to pass beneath the crane. The crane may be fixed or on a traveling base.

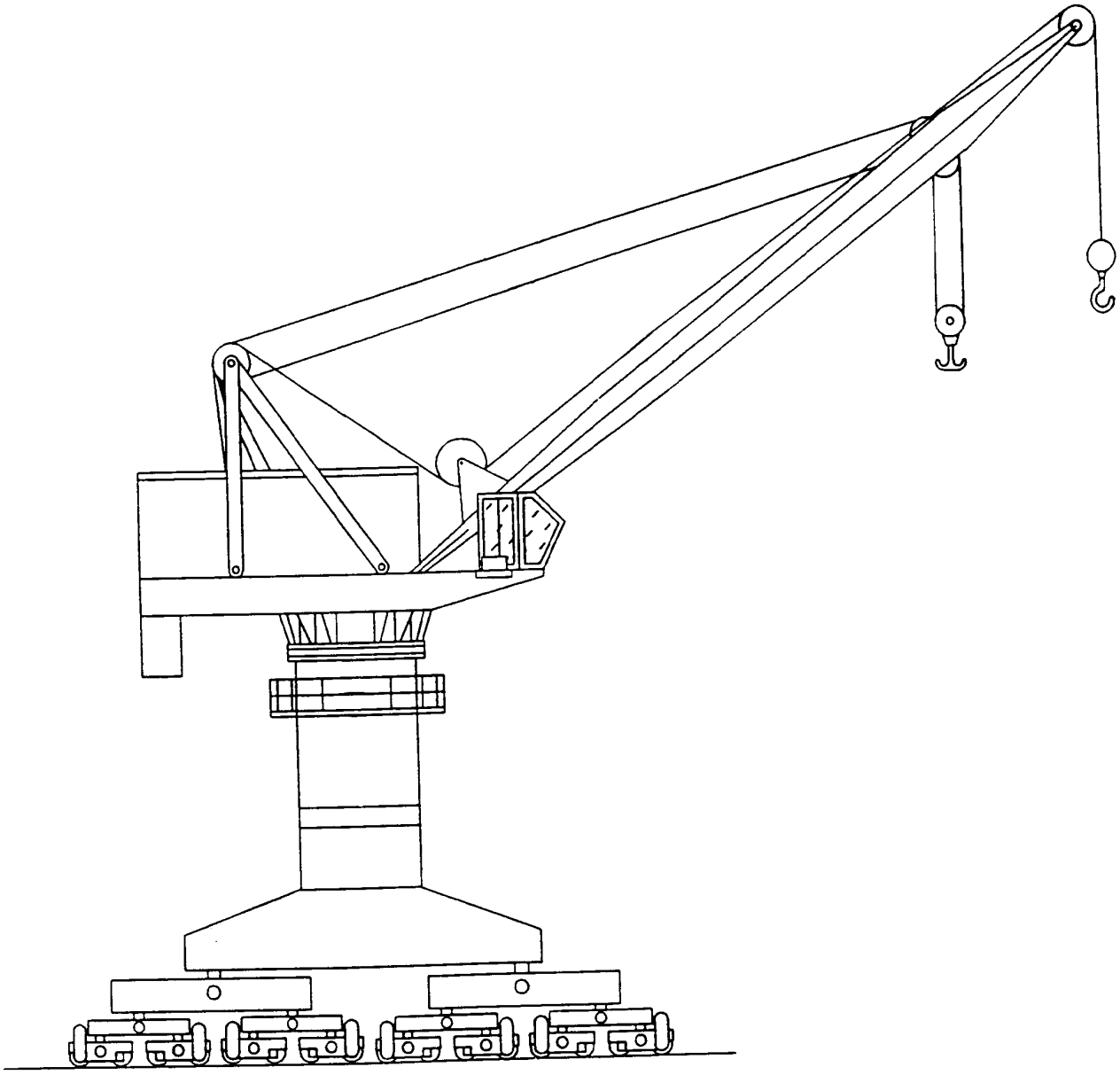

PORTAL CRANE

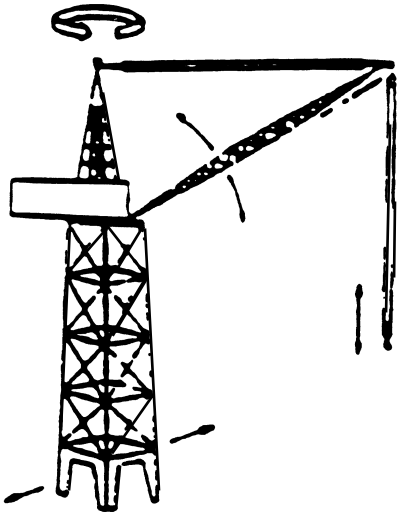

TOWER CRANE

Tower. Similar to a portal crane, but with a tower intervening between the superstructure and the gantry or other base structure; ordinarily, no portal is provided for traffic to pass beneath the crane. To resist overturning moments, the assembly may be ballasted, fixed to a foundation, or a combination of both. The crane may be fixed or on a traveling base.

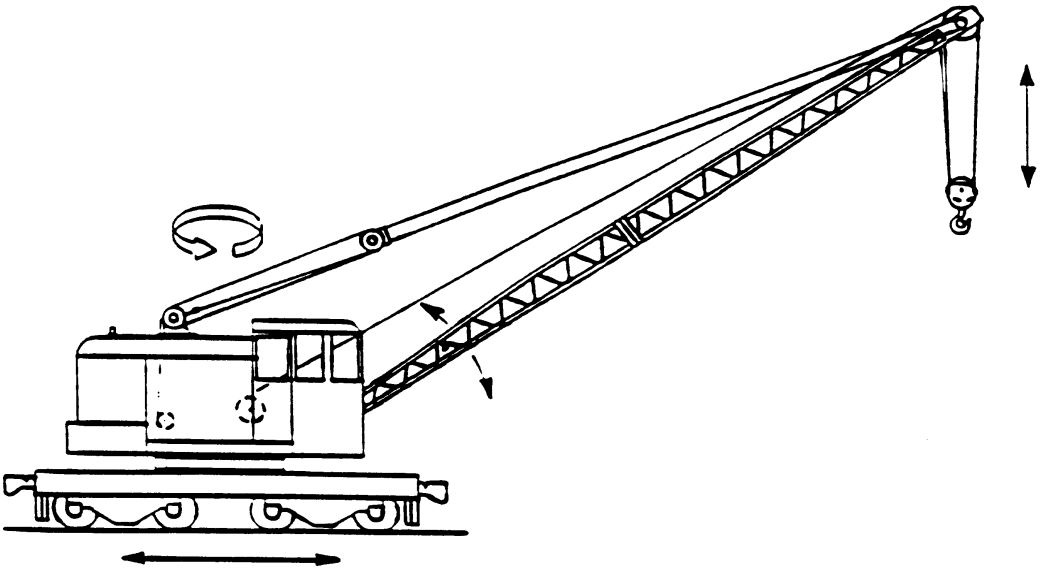

LOCOMOTIVE CRANE

Locomotive. A crane consisting of a rotating superstructure with a power plant, operating machinery, and a boom capable of being raised and lowered, all mounted on a base or car capable of traveling on railroad track. It may or may not be self-propelled.

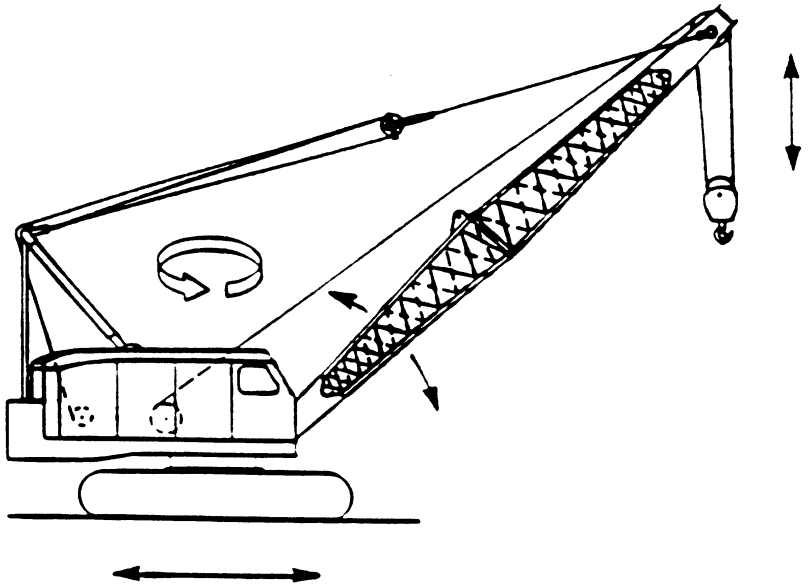

CRAWLER CRANE - FIXED BOOM

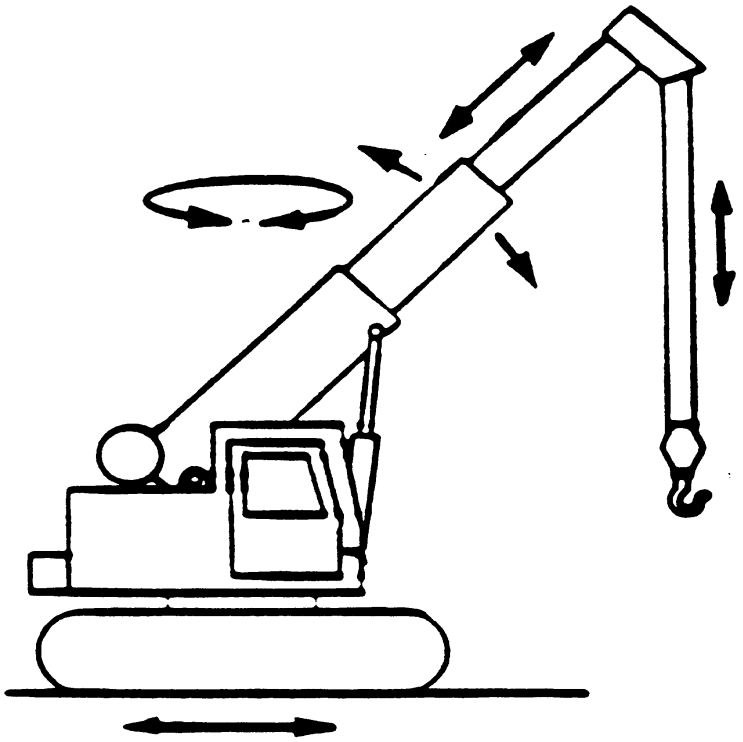

CRAWLER CRANE - TELESCOPING BOOM

Crawler. A crane consisting of a rotating superstructure with power plant, operating machinery, and a boom (either fixed or telescoping) capable of being raised and lowered, all mounted on a base equipped with crawler treads for travel.

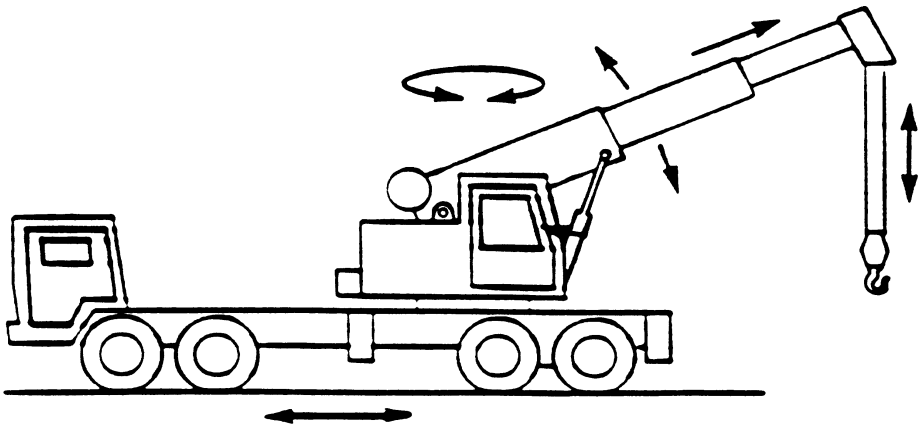

TRUCK CRANE - TELESCOPING BOOM

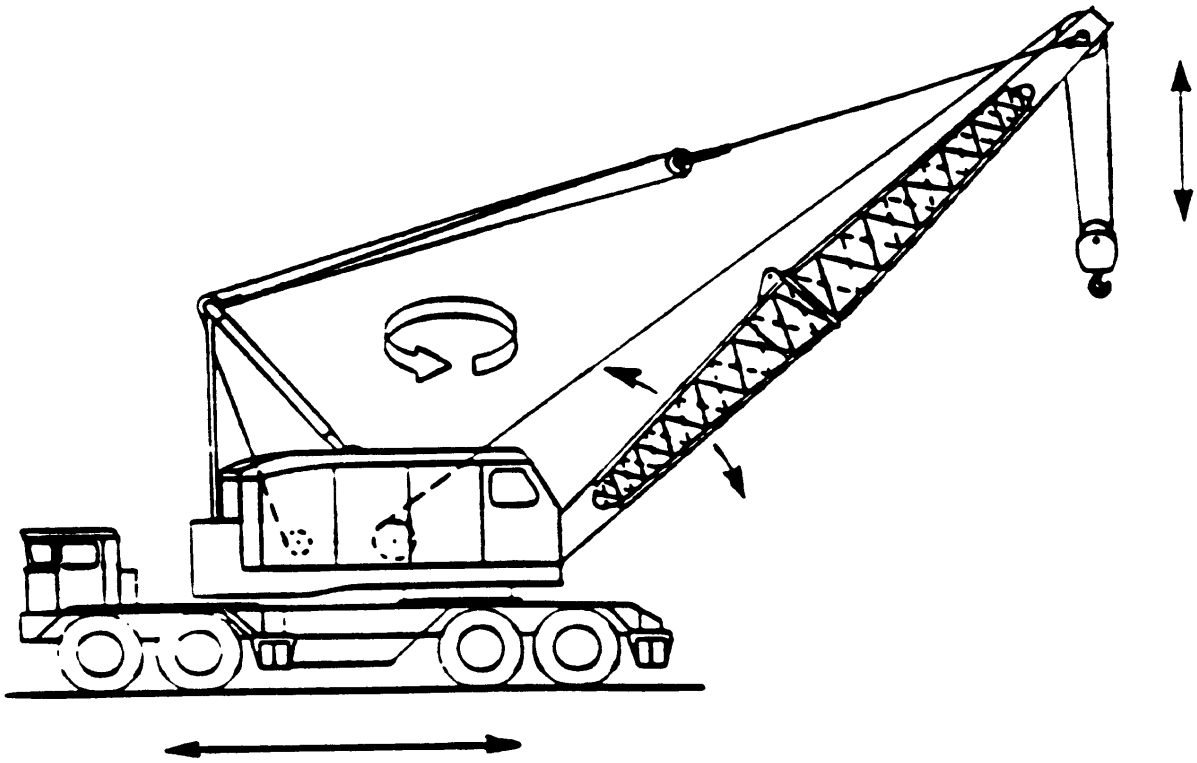

TRUCK CRANE - FIXED BOOM

Truck. A crane consisting of a rotating superstructure with power plant, operating machinery, and a boom (either fixed or telescoping) capable of being raised and lowered, all mounted on an automotive truck chassis equipped with a power plant for travel.

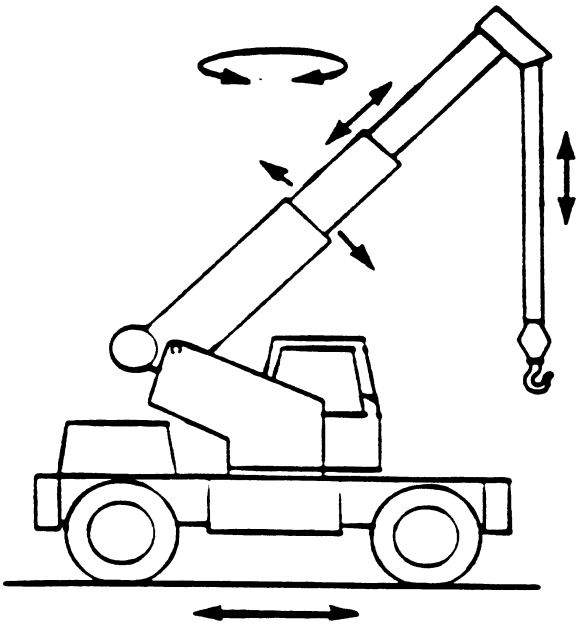

CRUISER CRANE - TELESCOPING BOOM

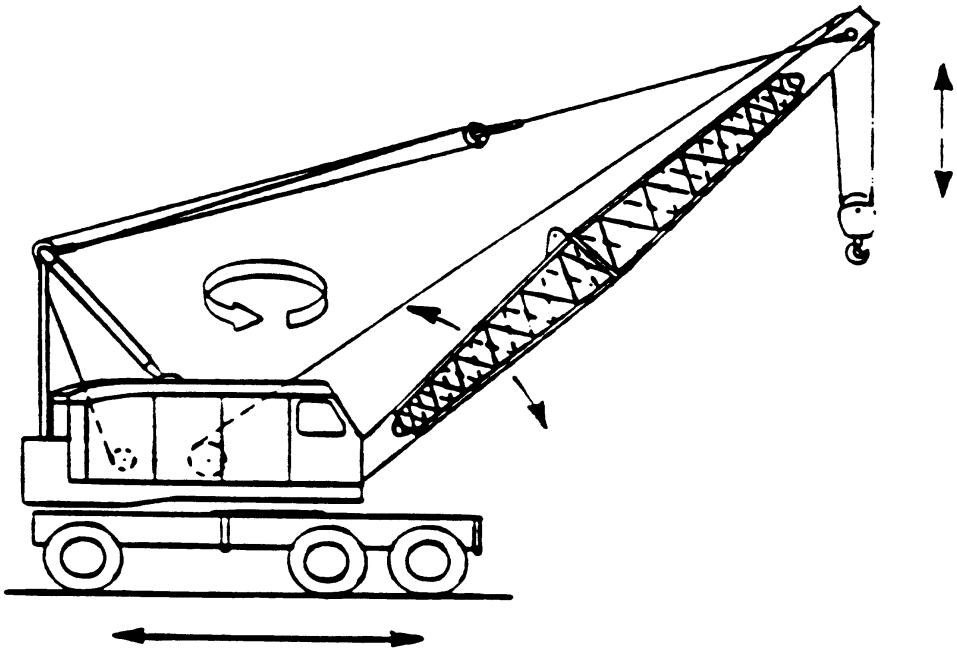

CRUISER CRANE - FIXED BOOM

Cruiser (Wagon Crane/Rough Terrain Crane). A crane consisting of a rotating superstructure with power plant, operating machinery, and a boom (either fixed or telescoping) capable of being raised and lowered, all mounted on a base or platform equipped with axles and rubber-tired wheels for travel. The base is usually propelled by the engine in the superstructure, but it may be equipped with a separate engine controlled from the superstructure.

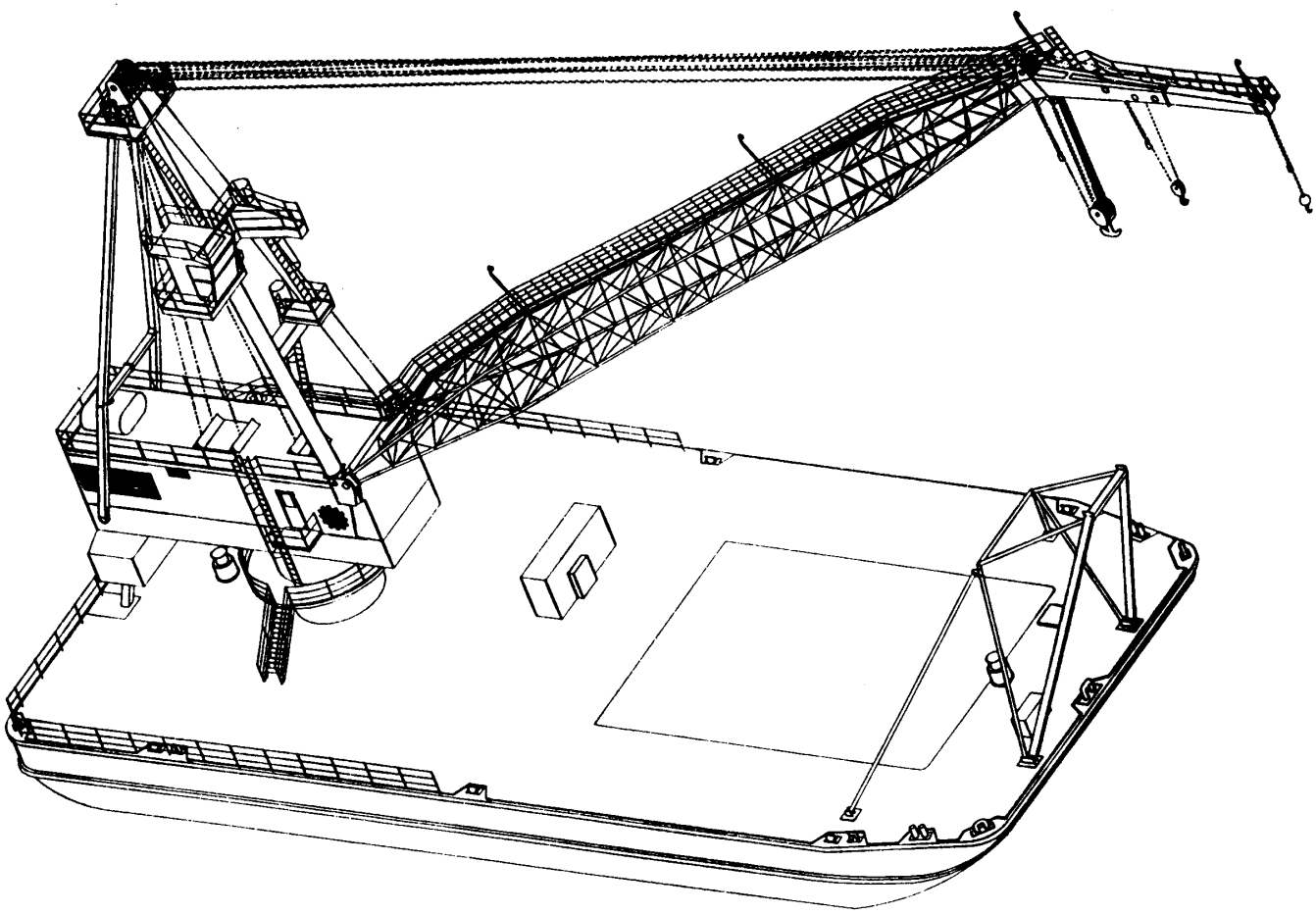

FLOATING CRANE

Floating. A crane with an integral base consisting of a pontoon, barge, or hull.

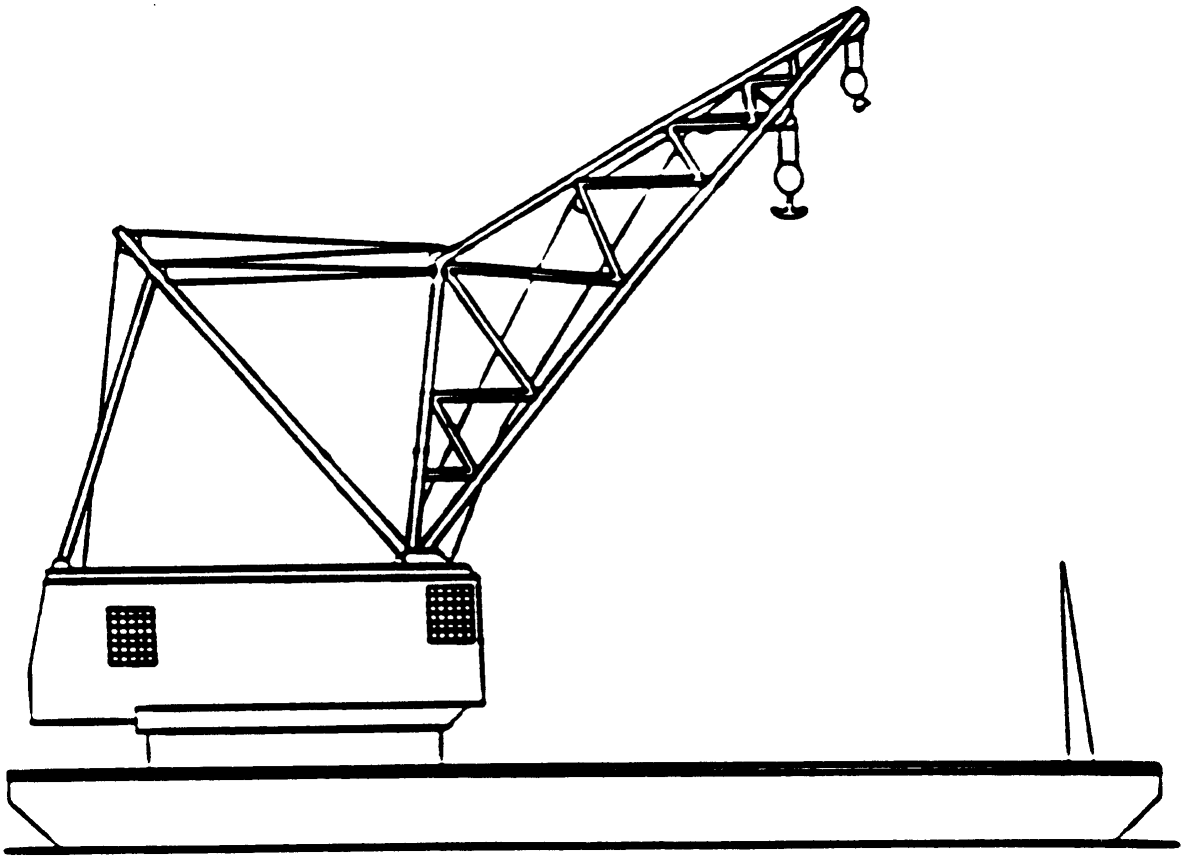

FLOATING CRANE

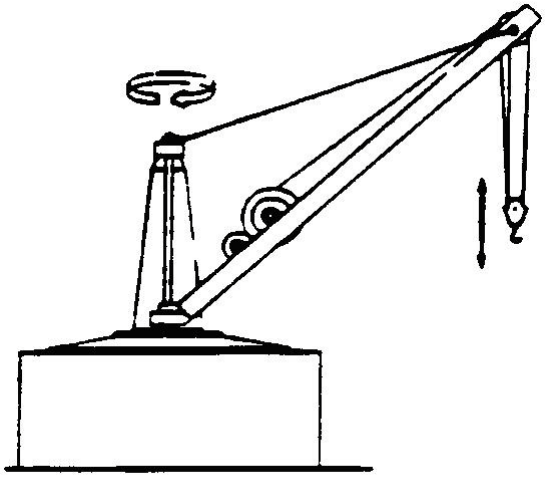

PILLAR CRANE

Pillar. A fixed crane consisting of a vertical member held in position at the base to resist overturning moment, with a constant-radius revolving boom supported at the outer end by a tension member.

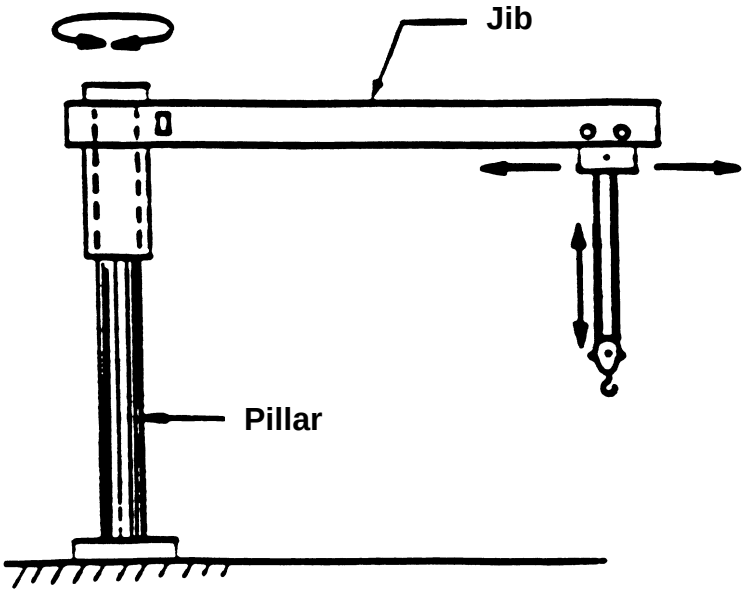

PILLAR-JIB CRANE

Pillar-Jib. A fixed crane consisting of a rotating vertical member with a horizontal arm carrying a trolley and hoist.

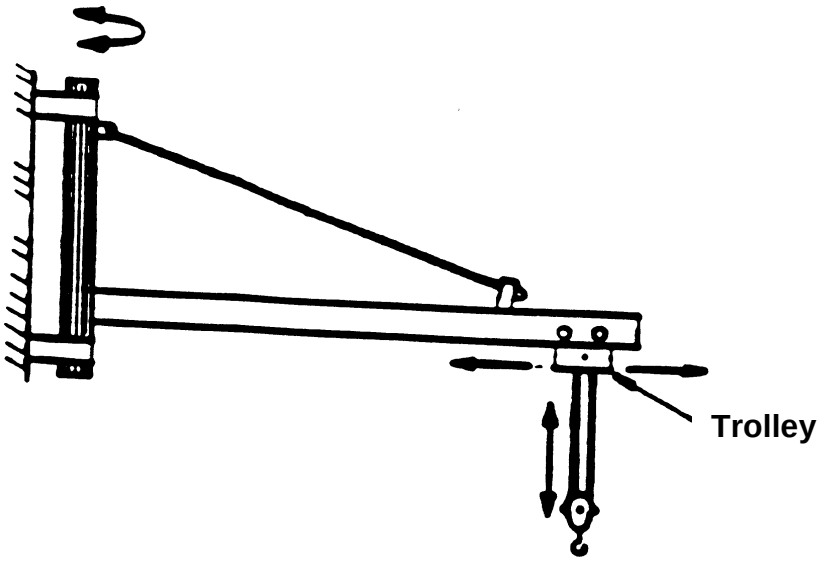

JIB CRANE (WALL MOUNTED)

Jib. A fixed crane, usually mounted on a wall or building column, consisting of a rotating horizontal boom (either cantilevered or supported by tie rods) carrying a trolley and hoist.

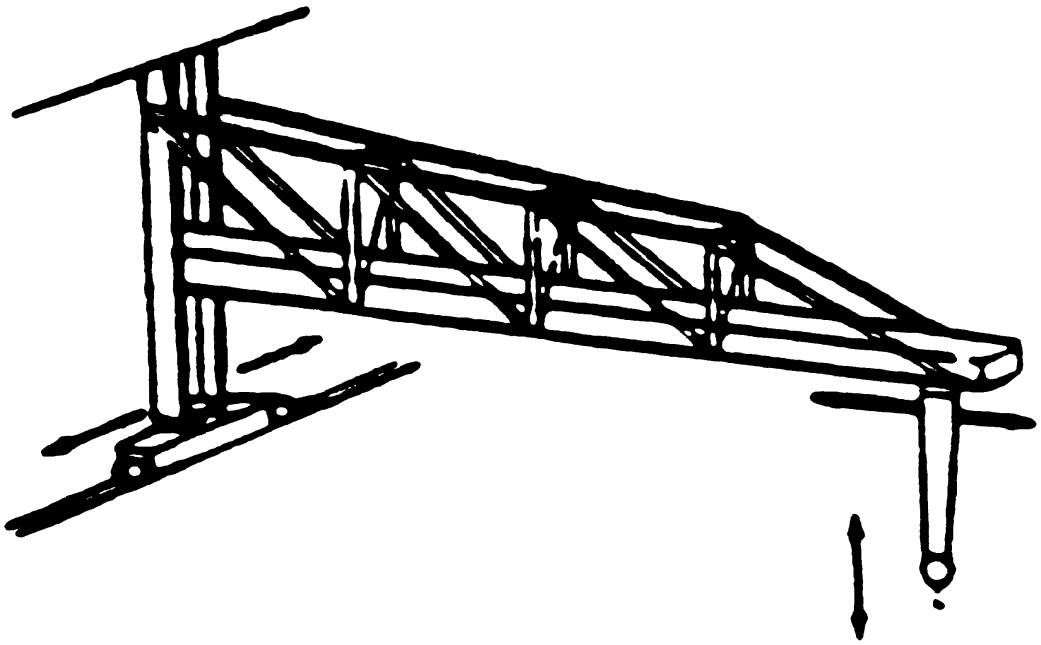

WALL CRANE

Wall. A crane with a jib and hoist, with or without a trolley, traveling on a runway attached to the sidewall or building columns.

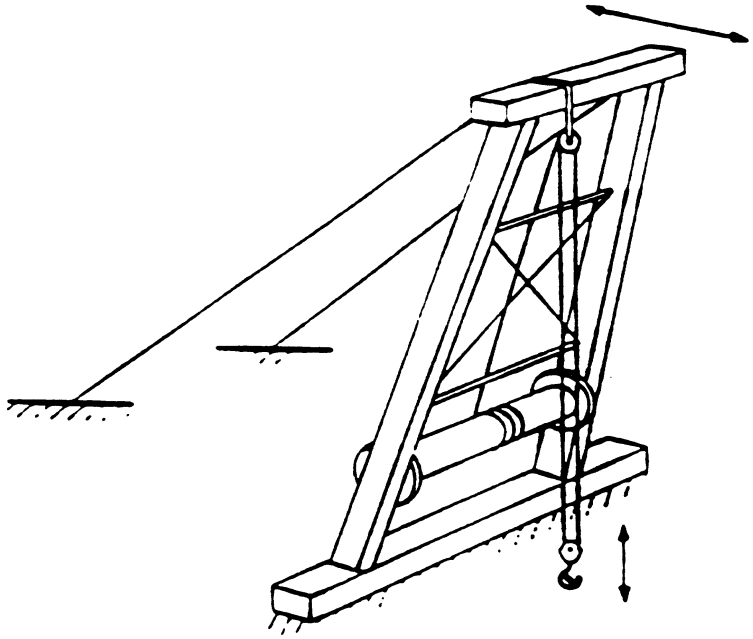

BREAST DERRICK

Breast Derrick. A derrick without a boom, the mast consisting of two side members spread farther apart at the base than at the top and tied together at top and bottom by rigid members. The top is held from tipping by guys, and the load raised and lowered by ropes through a sheave or block secured to the top crosspiece.

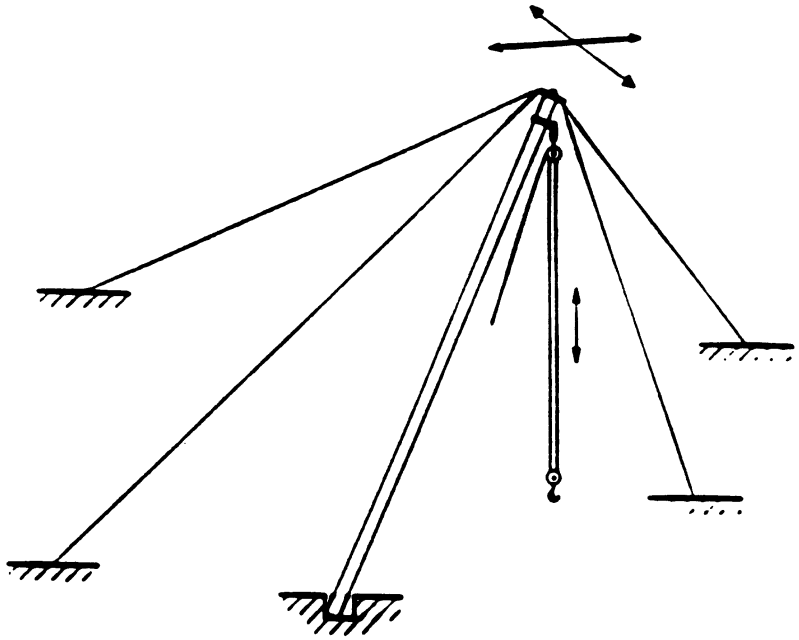

GIN-POLE DERRICK

Gin-pole Derrick. A derrick consisting only of a mast, with guys from its top arranged to permit leaning the mast in any direction. Ropes leading through sheaves or blocks at the top of the mast raise or lower the load.

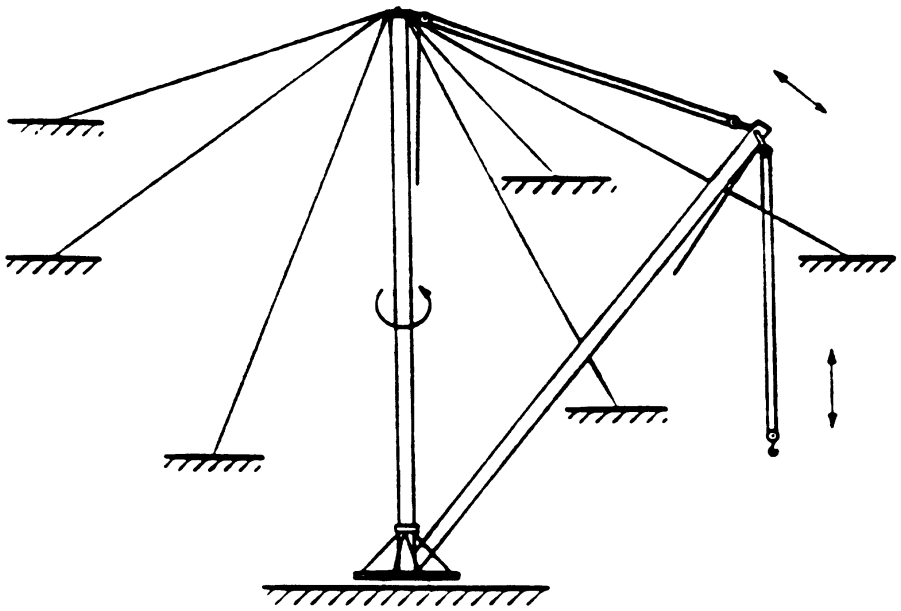

GUYED DERRICK

Guyed Derrick. A fixed derrick consisting of a mast, capable of being rotated, that is supported in a vertical position by three or more guys, and a boom with its bottom end hinged or pivoted to move in a vertical plane. Lines between the head of the mast and the head of the boom are used for raising and lowering the boom, and lines from the head of the boom are used for raising or lowering the load.

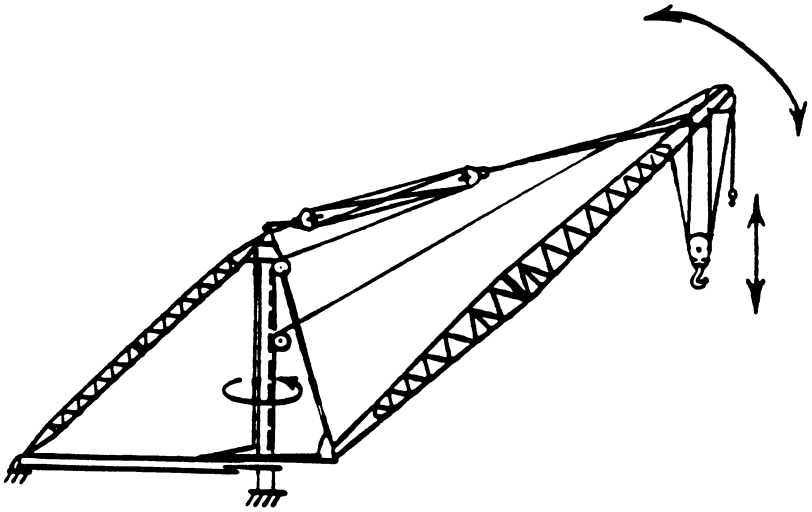

STIFF LEG DERRICK

Stiff leg Derrick. Similar to a guyed derrick except that the mast is supported or held in place by two or more stiff members capable of resisting both tensile and compressive forces. Sills are generally provided to connect the lower ends of the two stiff legs to the foot of the mast.

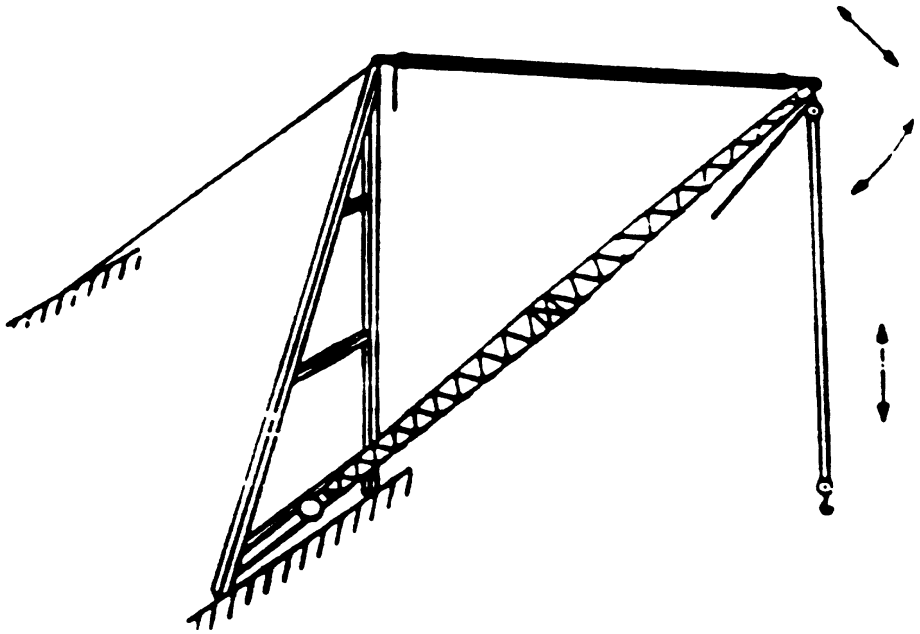

A-FRAME DERRICK

A-Frame Derrick. A derrick with a boom hinged from a cross member between the bottom ends of two upright members spread apart at the lower ends and united at the top. The upper end of the boom is secured to the upper junction of the side members, and the side members are braced or guyed from the junction point.

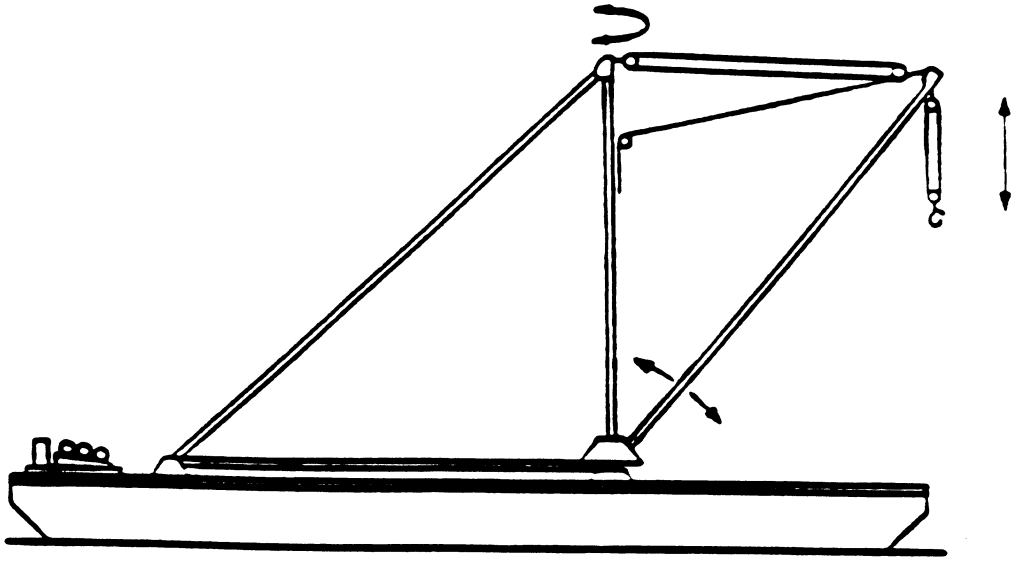

FLOATING STIFF LEG DERRICK

Floating Derrick. A derrick constructed integrally with a floating base. May be of any type, but usually is either an A-frame or a stiff leg type.

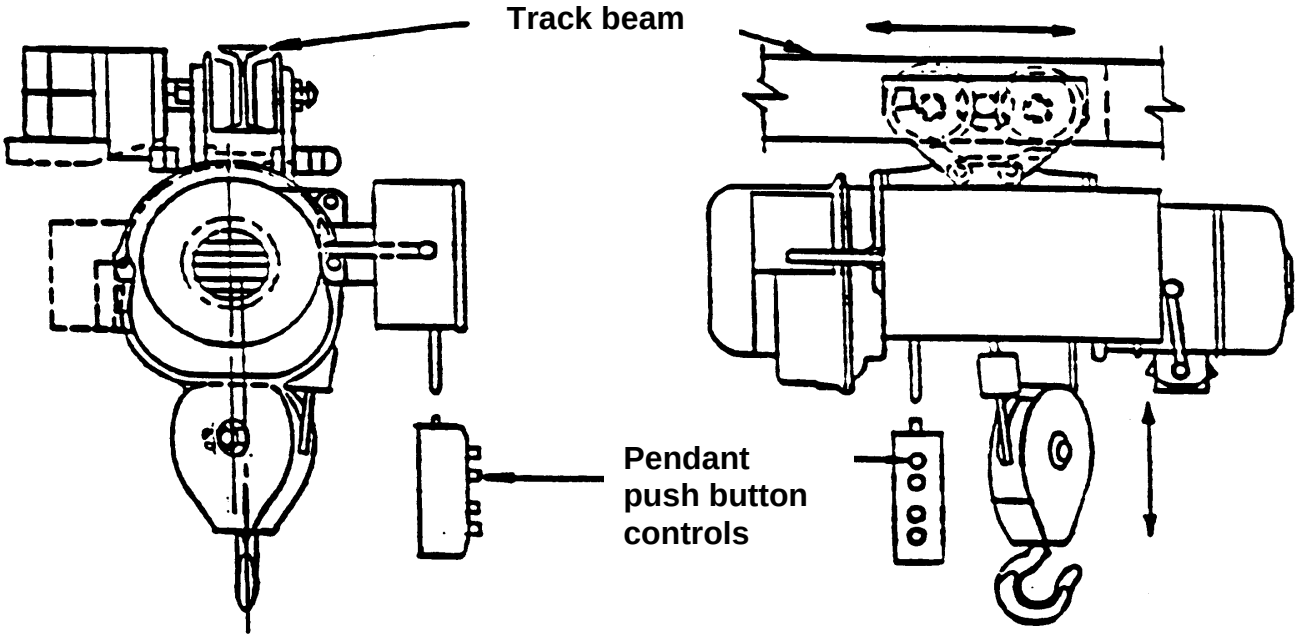

OVERHEAD HOIST
TROLLEY-MOUNTED ON MONORAIL TRACK

Overhead Hoist. A hoist having one or more drums and sheaves for wire rope or chain. May be manual, electric, hydraulic, or pneumatic powered. May be fixed or may travel on jib crane booms or monorail track.

Suspension Types for Overhead Hoists.

Clevis - Utilizes a clevis for the upper suspension member.

Hook - Utilizes a hook for the upper suspension member.

Trolley - Utilizes a trolley as upper suspension member for the purpose of traveling on jib booms and monorail track.

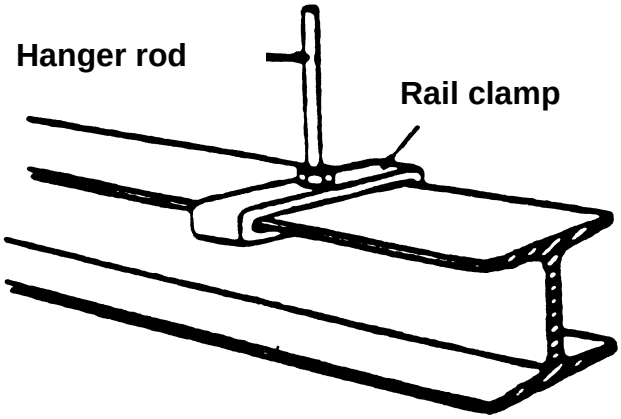

STRUCTURAL STEEL I-BEAM

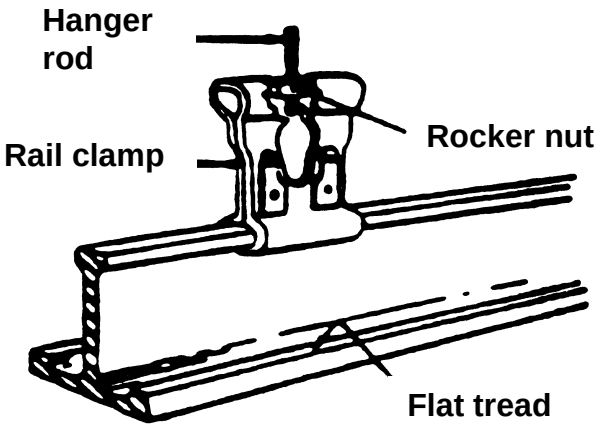

RAISED-TREAD STEEL TRACK

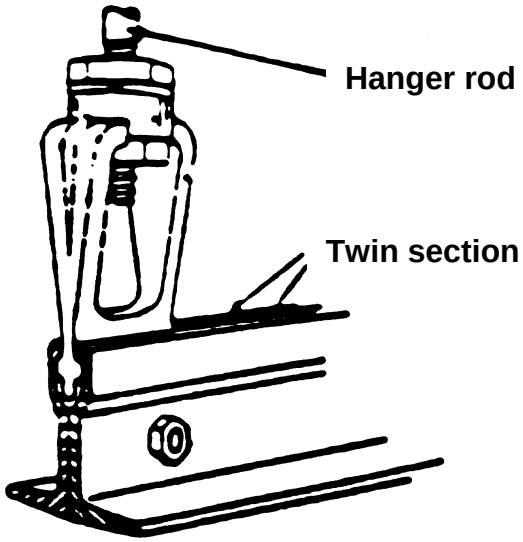

TWIN-SECTION TRACK

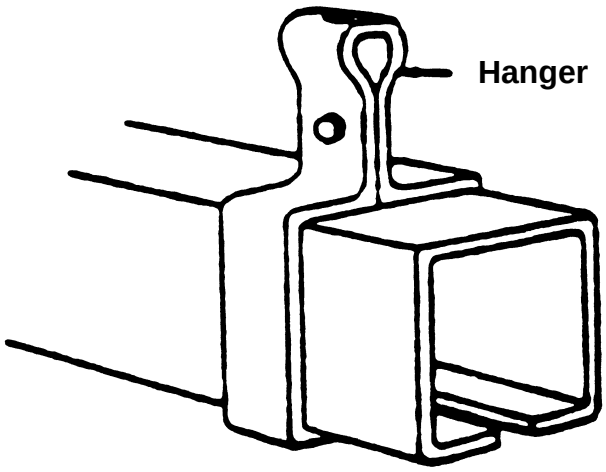

RECTANGULAR TUBING TRACK

<u>Track Types for Overhead Hoists</u>.

Structural steel I-beams - Use for heavy loads and long spans.

Raised-tread steel track (patented track) - Adds wear resisting thickness for longer service life.

Twin-section track - Use for light loads.

Rectangular tubing track - Use for light loads.

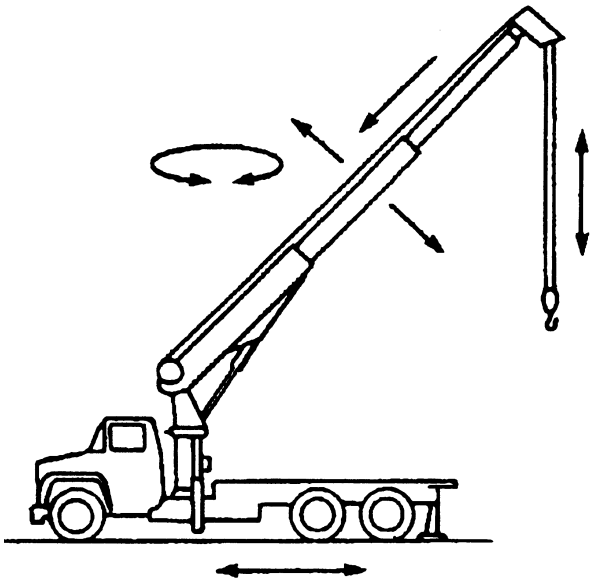

COMMERCIAL TRUCK-MOUNTED CRANE - TELESCOPING BOOM

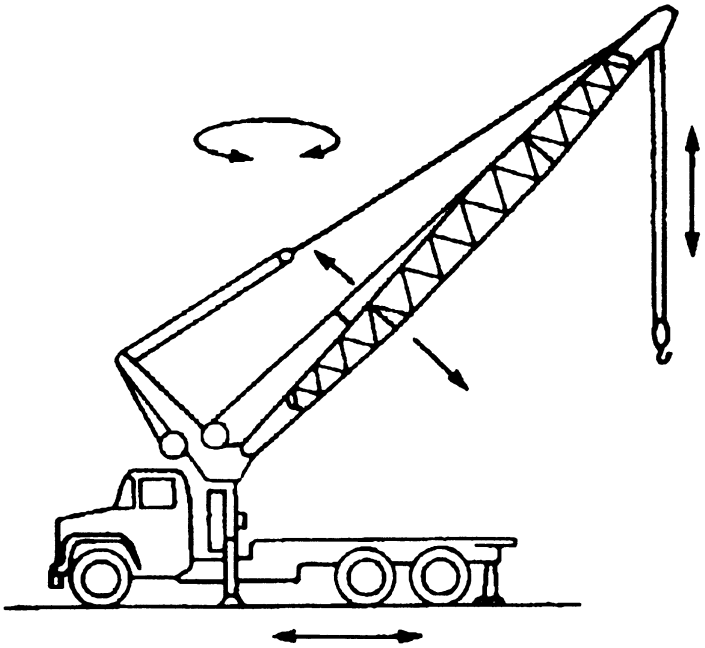

COMMERCIAL TRUCK-MOUNTED CRANE - NONTELESCOPING BOOM

Commercial Truck-Mounted Crane. A crane consisting of a rotating superstructure (center post or turn-table), boom, operating machinery, and one or more operator's stations mounted on a frame attached to a commercial truck chassis, usually retaining a payload hauling capability whose power source usually powers the crane. Its function is to lift, lower, and swing loads at various radii.

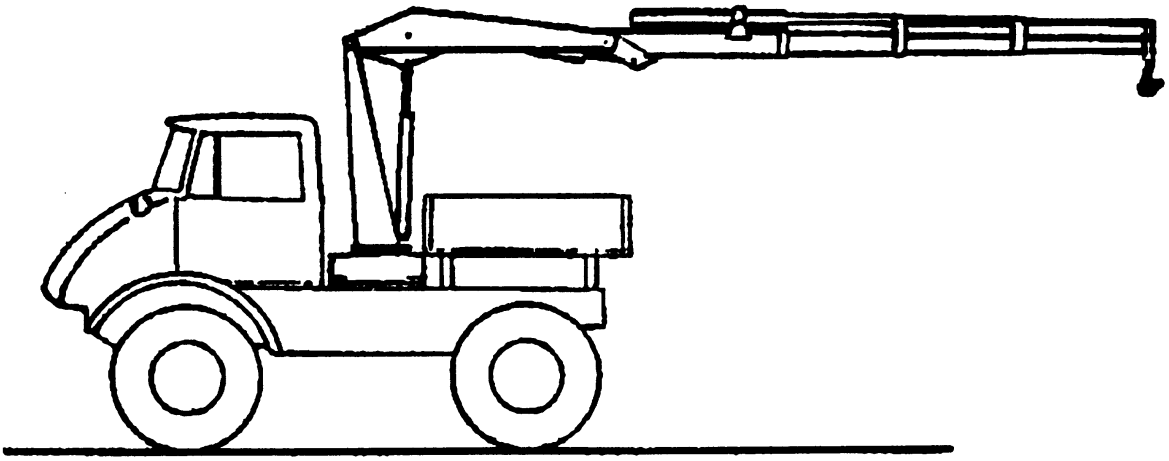

ARTICULATING BOOM CRANE - OFF-ROAD VEHICLE

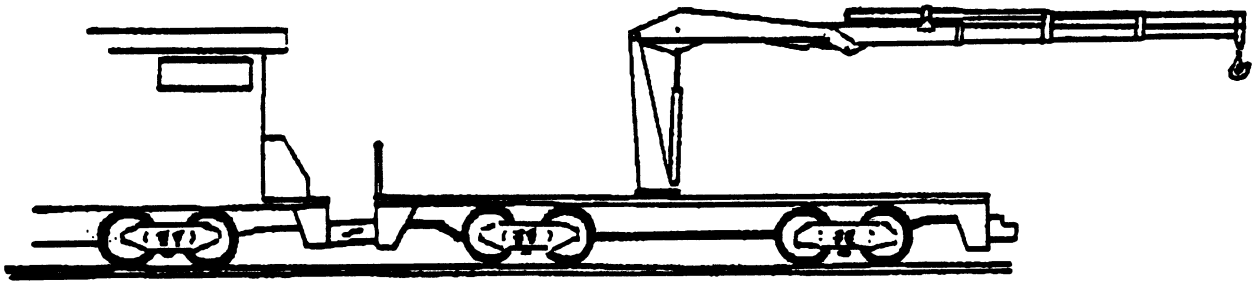

ARTICULATING BOOM CRANE - RAIL CAR INSTALLATION

Articulating Boom Crane. A crane with a boom that has sections that are articulated by hydraulic cylinders. The boom usually consists of an inner boom section, a secondary boom section, and an outer boom section, each section individually pivoting about a pivot point and individually powered by hydraulic cylinders. The boom may have a telescoping extension. The crane may be truck mounted, trailer mounted, rail car mounted, crawler-mounted, or stationary.

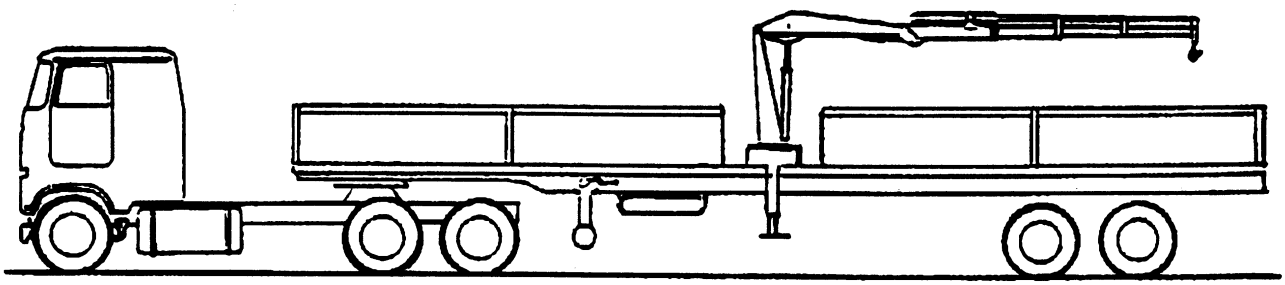

ARTICULATING BOOM CRANE - TRAILER MOUNTED

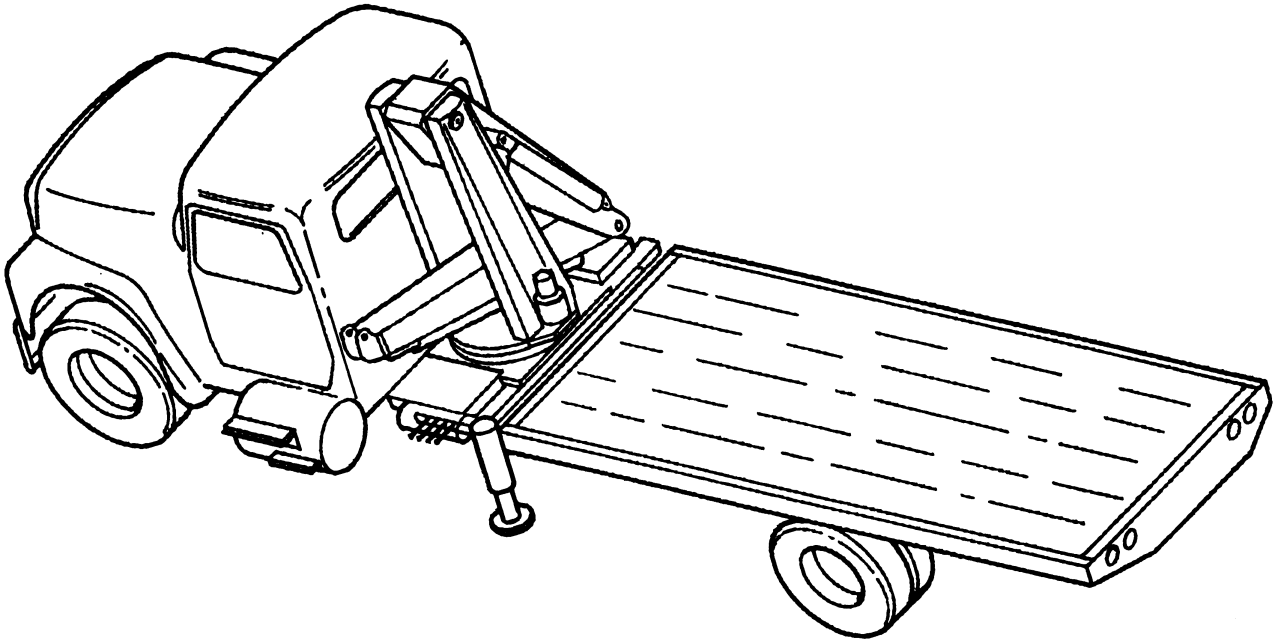

ARTICULATING BOOM CRANE
COMMERCIAL TRUCK-MOUNTED STANDARD GROUND CONTROL

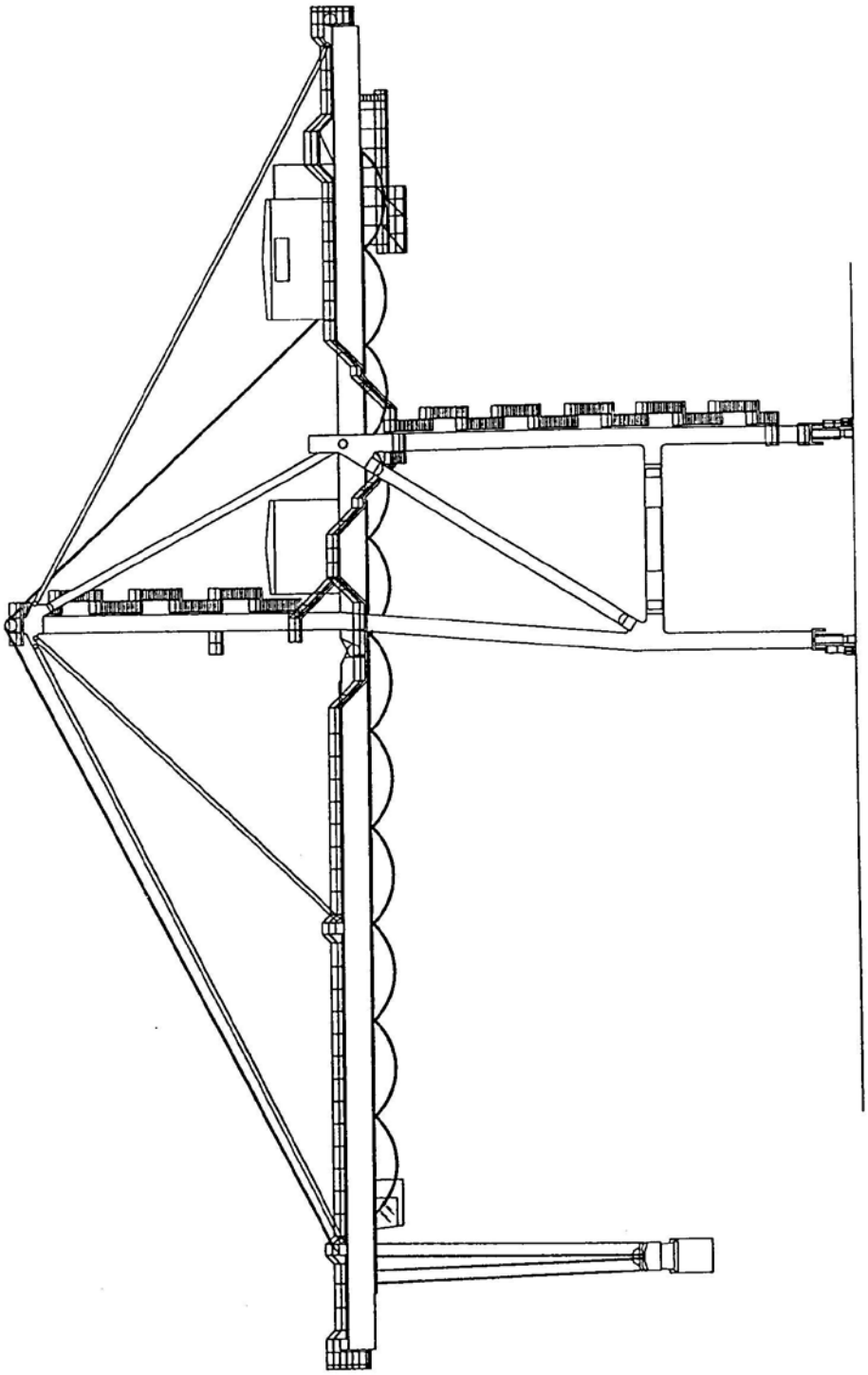

CONTAINER CRANE

Container. A crane consisting of a hinged boom and main beam with a traveling trolley mounted on a rail mounted traveling gantry structure. Container cranes are used for quickly transferring containers on and off ships.

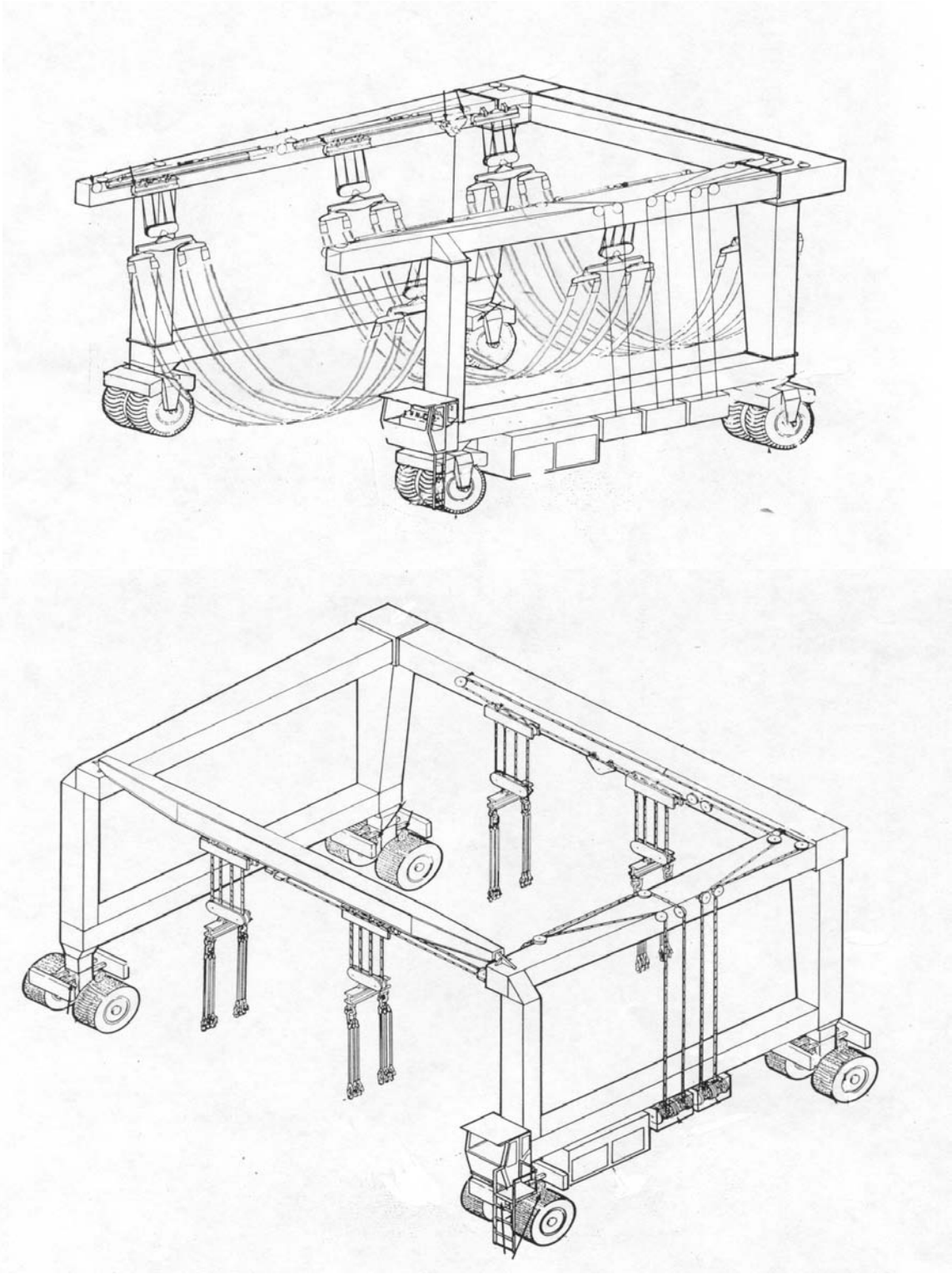

MOBILE BOAT HOIST

Mobile Boat Hoist. A straddle type carrier consisting of a steel structure of rectangular box sections, supported by four sets of dual wheels capable of straddling and carrying boats.

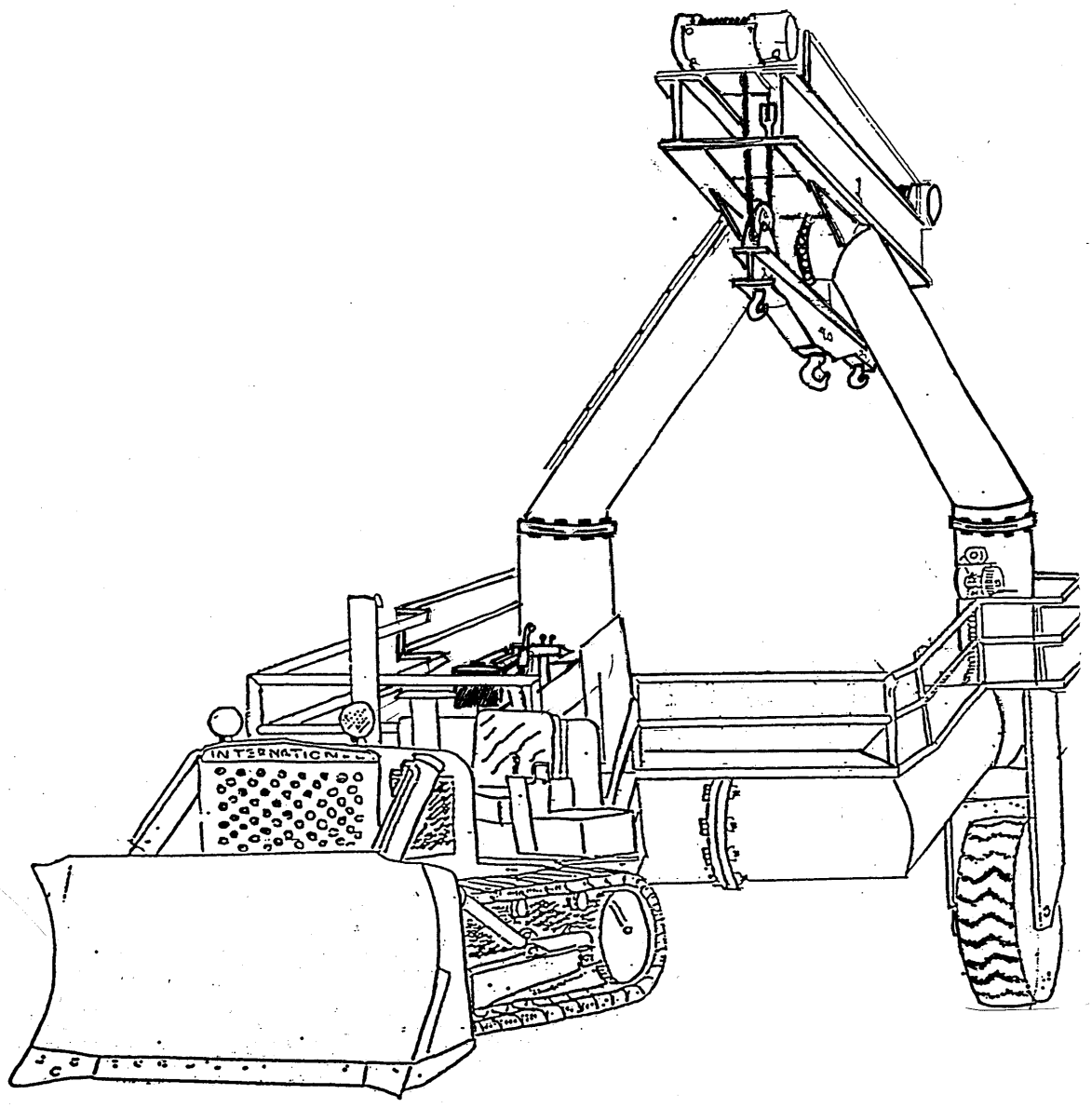

MOBILE BOAT HOIST (landing craft retrieval unit)

Mobile Boat Hoist. A straddle type self propelled or towed type carrier consisting of a steel structure supported by wheels capable of straddling and carrying boats.

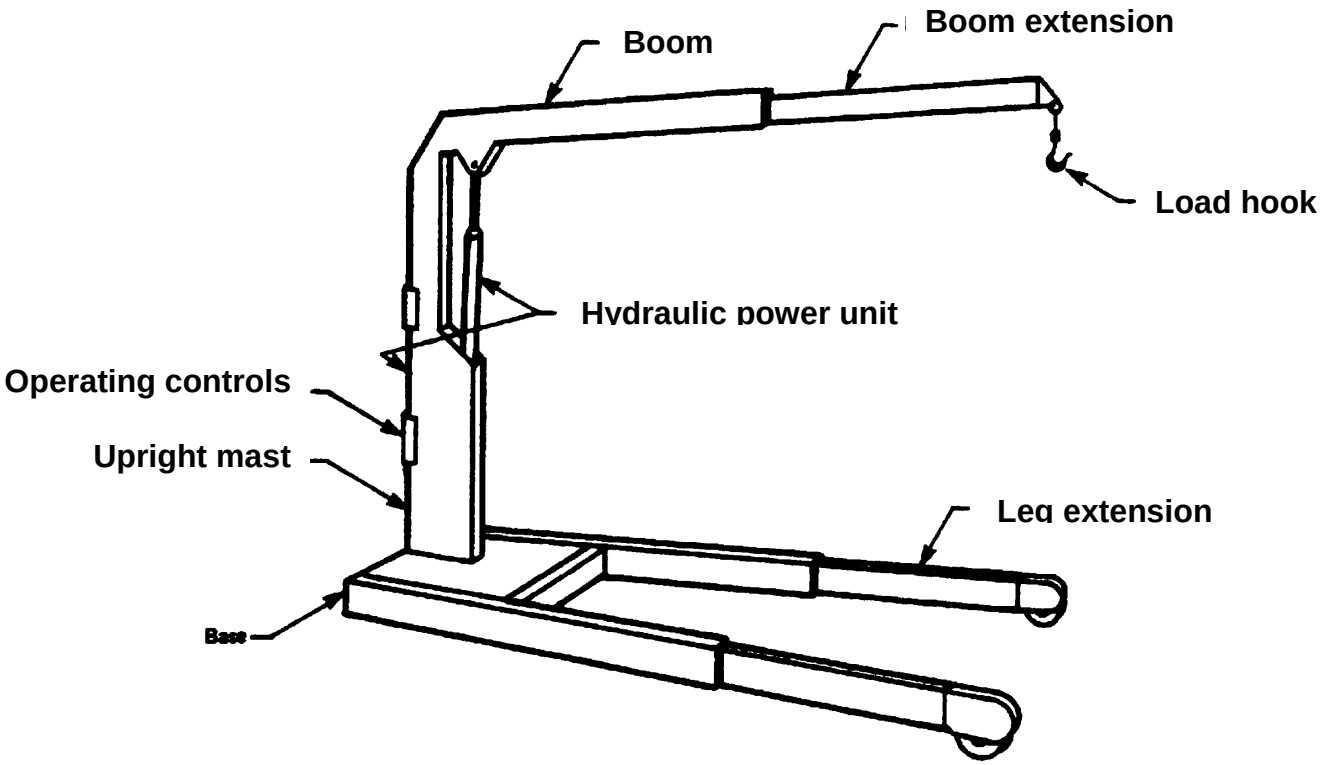

PORTABLE FLOOR CRANE

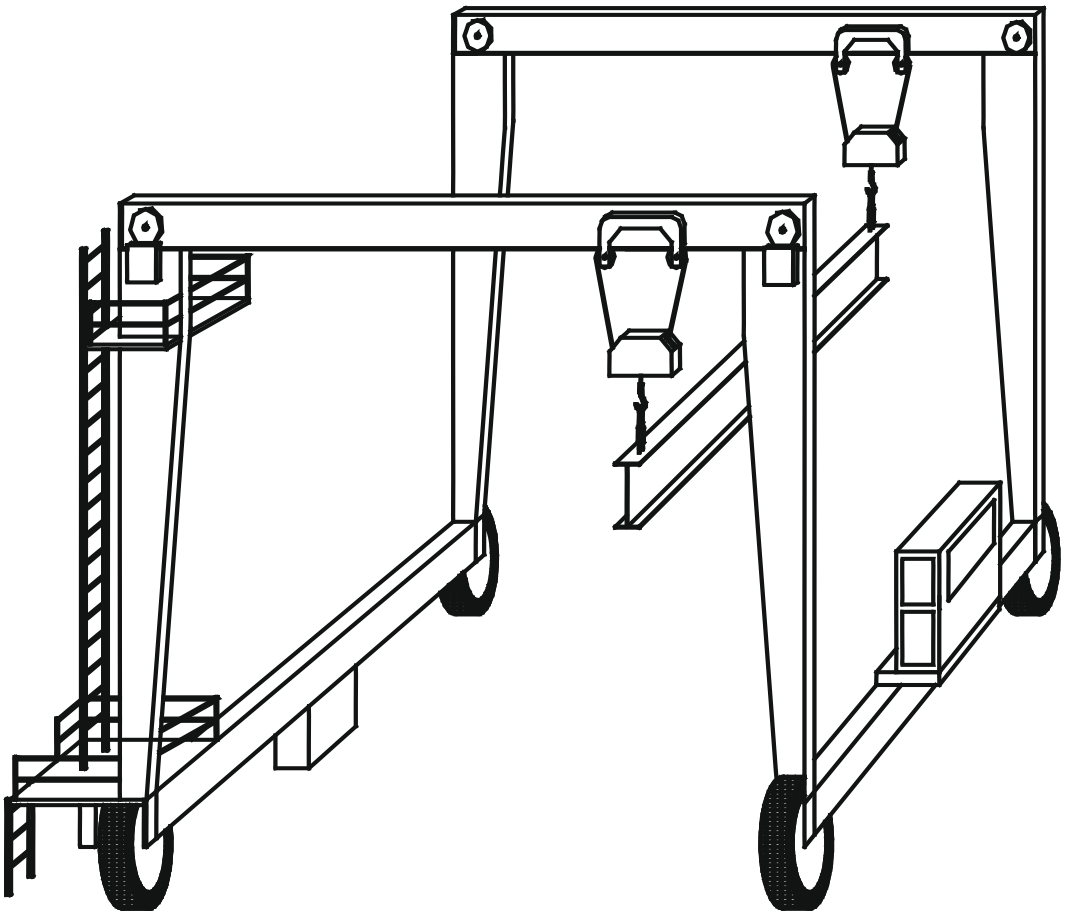

RUBBER-TIRED GANTRY CRANE

(INTENTIONALLY LEFT BLANK)

APPENDIX C - MAINTENANCE INSPECTION SPECIFICATION AND RECORD FOR CATEGORY 1 and 4 CRANES

Notes:

1. The following are the minimum inspection requirements. Due to the various makes and models of cranes in the Navy inventory with unique or special components, these specifications may require additional instructions. Components need not be disassembled for inspection, except: (a) where noted specifically to disassemble; (b) where activity experience warrants disassembly of specific components; or (c) where problems indicated by these inspections require disassembly for further inspection. Where disassembly and reassembly are required, or for other detailed inspection guidelines, shop repair orders or other work documents shall be utilized (except for inspection covers) to properly document the necessary steps required for disassembly, reassembly, and/or other inspection guidelines. Deleting or reducing the frequency of these inspections requires Navy Crane Center approval (see paragraph 2.6 for exceptions). Justification shall be provided with the activity's request. Additional or more frequent inspections based upon activity experience or OEM recommendations may be performed at the discretion of the activity. Additional inspection requirements and recommendations for specific OEM's are also contained in CSAs and EDMs located on the Navy Crane Center web-site (https://portal.navfac.navy.mil/ncc).

2. These specifications include both non-operational and operational inspection criteria. Where necessary to ensure the safety of inspection and maintenance personnel, the crane shall be de-energized in accordance with approved lockout procedures.

3. For inspections that involve fluids (lubricants, coolants, brake fluid, hydraulic fluid, etc.) or grease, inspect the fluid or grease for visual appearance, smell, and feel and inspect for indications of damaged or malfunctioning components.

4. Where an unsatisfactory condition is found, the item shall be identified on the "Unsatisfactory Items" sheet together with a statement of the condition observed. Corrective action in terms of adjustments, repairs, or replacements of items shall be detailed on a shop repair order or other appropriate document. (See NAVFAC P-300 for a sample shop repair order.)

5. Brake data measurements shall be recorded on the "Brake Data" sheet. Measurement attributes and criteria shall be based on brake and/or crane OEM recommendations and/or recommendations of the activity engineering organization. In addition to minimum and maximum settings, a preferred setting shall be specified where appropriate. Where measurements are inaccessible without disassembly, those measurements need only be taken when the brake is disassembled.

6. Where measurements are specified by the activity engineering organization, these measurements shall be recorded. Wire rope dimensional measurements shall be recorded.

7. As an alternative to the above dimensional measurements, gages may be used if supplied by the OEM or as approved by the activity engineering organization. If gages are used, the gage part number or drawing number shall be recorded on the Maintenance Inspection Specification and Record.

8. Where an inspection item applies to multiple components (e.g., main hoist, auxiliary hoist, whip hoist), each component shall be identified in the "system inspected" column.

9. The inspection criteria address most of the features and components on typical cranes. If a crane is equipped with features or components not specifically covered by these requirements, those features and components shall be inspected (where inspection is practical, as determined by the activity engineering organization and approved by the certifying official) for proper condition and operation, e.g., emergency dynamic braking, motor overspeed and over temperature sensors, travel and rotate limit switches, and micro drives.

10. Where “NA” is used to note that an inspection criterion does not apply due to a reason other than the component or feature is not present on the crane, the reason for the “NA” shall be entered on the “Remarks” sheet. For example, if an “NA” is entered in the electric magnetic brake system brake lining inspection criterion (item 27a below the dashed line) due to the crane having holding brakes and this not being the second “C” inspection, these facts shall be noted on the “Remarks” sheet.

MAINTENANCE INSPECTION SPECIFICATION AND RECORD FOR CATEGORY 1 and 4 CRANES

SHEET__1__ OF _____

Crane	Type	Manufacturer	Capacity

Prior Inspection		Current Inspection		Legend: Check under condition
DATE/HOURS	TYPE	DATE/HOURS	TYPE	S = Satisfactory C = Corrected (If deferred, leave blank and identify on Unsatisfactory Items sheet.) U = Unsatisfactory NA = Not Applicable

Item No	Inspection Type			Items to be Inspected	Maintenance Inspection Specification	System Inspected	Condition			
	A	B	C				S	U	C	NA
1	X	X	X	Cooling System (Hoses, Thermostat, Pump, Radiator)	Inspect hoses for cracks, clamps for evidence of looseness, and entire system for leaks. Inspect for proper coolant level, color, and clarity. During operation, inspect for leaks and verify proper shutter operation. Inspect for proper engine coolant temperature. Listen for abnormal noise originating from the water pump and inspect for leaking seals.					
		X	X		Inspect for proper coolant freeze protection. Inspect radiator fan for damage.					
2	X	X	X	Lube Oil Lines and Lube Pressure	Inspect for evidence of loose connections, leakage, or damage. During operation, inspect for leaks. Inspect gauge for proper lube oil pressure.					
3	X	X	X	Fuel Lines and Fuel Pressure	Inspect for evidence of loose connections, leakage, or damage. During operation, inspect for leaks. Verify proper operation of the fuel pump and fuel pressure gauge and inspect fuel pressure.					
4			X	Starter	Inspect for damaged or deteriorated wiring, evidence of loose connections, and proper lubrication. Operate starter and listen for abnormal noise and verify proper operation.					
5		X	X	Air Starting Lines	Inspect for evidence of loose connections and damage. When lines are charged, inspect for leaks. Inspect lubricators for lubrication level and leakage.					
6		X	X	Drive Belts	Inspect drive belts on fan, water pump, oil pumps, alternator, and external fuel transfer pumps for tension and wear.					
7		X	X	Engine Alternator/ Generator (Battery Charging System)	Inspect for cleanliness and proper lubrication Inspect external wiring for damage, deterioration, or oil or grease contamination, and for evidence of loose connections. During operation, inspect for rubbing, vibration, and sparking. Listen for abnormal noise. Verify that alternator/generator is properly charging batteries.					
8		X	X	Battery and Cables	Inspect battery for proper electrolyte level, cleanliness, structural distortion, damaged racks/holders, and evidence of loose terminals. Inspect battery cables for damage or deterioration, and for evidence of loose connections.					
9		X	X	Voltage Regulator (Battery Charging System)	Inspect for evidence of loose or damaged wires and connections. During operation, verify regulator cycles and does not overcharge batteries.					
10		X	X	Engine Wiring	Inspect wiring to lights, warning devices, and meter connections for damage or deterioration, and for evidence of loose connections.					

MAINTENANCE INSPECTION SPECIFICATION AND RECORD FOR CATEGORY 1 and 4 CRANES

SHEET__2__ OF _____

Crane

Item No	Inspection Type			Items to be Inspected	Maintenance Inspection Specification	System Inspected	Condition			
	A	B	C				S	U	C	NA
11		X	X	Gauges (Oil, Fuel, Temperature, Ammeter, Tachometer, Etc.)	Inspect for identification, legibility, and condition. Inspect for evidence of loose electrical or mechanical connections. Verify operation (calibration not required).					
12		X	X	Turbocharger	Inspect for evidence of loose or missing mounting bolts and parts. During operation, inspect for vibration and oil leaks. Listen for abnormal noise.					
13		X	X	Governor	Inspect linkage for evidence of binding, looseness, and damaged parts. Inspect for proper oil level. Verify proper operation.					
14	X	X	X	Fuel Filters	Inspect for leaks prior to and during operation.					
15	X	X	X	Air Cleaner	Inspect mounting brackets for evidence of loose or missing fasteners. Inspect for proper oil level and condition of filter element or vacuum indicator.					
16		X	X	Throttle Linkage	Inspect for evidence of loose and damaged components. Verify proper operation.					
17		X	X	Clutch-Main Drive	Inspect linkage for damage, for evidence of binding, loose and worn components, and for proper lubrication and adjustment. During operation, inspect for slippage and evidence of binding. Listen for abnormal noise.					
			X		At every second "C" inspection, disassemble and inspect all internal components. Note: Does not apply to chassis drive clutches.					
18		X	X	Exhaust System	Inspect for holes, for damaged gaskets, for evidence of loose or missing fasteners, and for proper insulation. During operation, inspect for leaks and sparks. Listen for abnormal noise.					
19	X	X	X	Engine Condition	During operation, inspect for excessive smoking and vibration. Listen for abnormal noise. Follow main and or auxiliary engine OEM guidelines for specific additional inspection items.					
20		X	X	Engine Alarm Safety Devices	Inspect wiring for damage or deterioration, and for evidence of loose connections.					
20a			X	Engine Alarm Safety Devices (not applicable to auxiliary or mobile crane engines)	Verify proper operation of engine overspeed, oil system, and water system shutdown and/or alarm systems by testing with sensors installed where practical. If sensor removal is necessary for shop testing or calibration, reinstallation and inspection shall be per controlled procedures approved by the activity engineering organization.					
21			X	Heat Exchanger	Inspect for oil and water leaks, and for evidence of loose or missing fasteners. During operation, verify operation of temperature gauges.					
22			X	Fuel Tank	Inspect fuel tank for leaks, for condition of gauge, and for evidence of loose or missing fasteners. Inspect fuel strainers and filters. Inspect for proper venting.					
23	X	X	X	Clutches (Boom, Hoist, Swing, and Travel)	Inspect clutch linkage for damage, for evidence of binding and loose or worn components, and for proper lubrication and adjustment. Inspect clutch linings for wear, debonding, and glazing, and drums for smoothness and for evidence of overheating. During operation, inspect for slippage and evidence of binding. Listen for abnormal noise.					

MAINTENANCE INSPECTION SPECIFICATION AND RECORD FOR CATEGORY 1 and 4 CRANES

SHEET__3__ OF _____

Crane

Item No	Inspection Type A	Inspection Type B	Inspection Type C	Items to be Inspected	Maintenance Inspection Specification	System Inspected	Condition S	Condition U	Condition C	Condition NA
24	X	X	X	Mechanical Brakes	Inspect system for damage, for evidence of binding, loose, and worn components, and for proper lubrication. Inspect brake linings for wear, and drums for smoothness and for evidence of overheating. Inspect brakes for proper settings and for alignment of brake shoes. During operation, verify proper release, engagement, and stopping action in both directions of motion. Inspect for evidence of overheating.					
		X	X	Brake Linings	Disassemble as required to inspect brake linings for wear, debonding, and glazing. For hoist brakes that stop the movement of the load under normal operation conditions, this shall be done annually. For other hoist brakes (i.e., holding brakes) and for rotate and travel brakes (including chassis travel brakes), disassemble as required at every second "C" inspection.					
25 a	X	X	X	Hydraulic Brake System (Shoe, Caliper/Disc, and Band Type Brakes)	Inspect system for damage, for evidence of binding, loose, and worn components, and for proper lubrication. Inspect brake linings for wear, and drums or rotors for smoothness, and for evidence of overheating. Inspect brakes for proper settings and for alignment of brake shoes, calipers, and bands. Inspect master cylinders for proper hydraulic brake fluid level. Inspect lines for damage or leakage, and for evidence of loose connections. During operation, verify proper release, engagement, and stopping action in both directions of motion. Inspect for evidence of overheating. (Not applicable to internal disc brakes on mobile and floating crane hoist and rotate assemblies.)					
		X	X	Brake Linings	Disassemble as required to inspect brake linings for wear, debonding, and glazing. For hoist brakes that stop the movement of the load under normal operation conditions, this shall be done annually. For other hoist brakes (i.e., holding brakes) and for rotate and travel brakes (including chassis travel brakes), disassemble as required at every second "C" inspection.					
25 b	X	X	X	Hydraulic Brake System (Caliper Brakes on Wire Rope Drums)	Inspect system for damage, for evidence of binding, loose, and worn components, and for proper lubrication. Inspect brake linings for wear, and braking surfaces for smoothness and for evidence of overheating. Inspect brakes for proper settings and for alignment of calipers. Inspect for proper hydraulic brake fluid level. Inspect system (pumps, accumulator, gauges, and lines) for damage or leakage, and for evidence of loose connections. During operation, verify proper release and engagement and stopping action in both directions of motion and timing of release and engagement. For brakes with Belleville torque springs, record the number of cycles as shown on the brake cycle counter.					

MAINTENANCE INSPECTION SPECIFICATION AND RECORD FOR CATEGORY 1 and 4 CRANES

SHEET__4__ OF _____

Crane

Item No	Inspection Type A	Inspection Type B	Inspection Type C	Items to be Inspected	Maintenance Inspection Specification	System Inspected	Condition S	Condition U	Condition C	Condition NA
25 b cont		X	X	Hydraulic Brake System (Caliper Brakes on Wire Rope Drums)	Compare the total number of cycles applied to each brake actuator's Belleville springs to the allowable maximum number of cycles specified for that actuator and ensure that none of the springs have exceeded the maximum value. Record Belleville spring cycle limit and number of cycles in the equipment history file. (For brakes without cycle counters, the activity shall conservatively estimate the brake usage and ensure that the springs are replaced before their fatigue life is reached.)					
25b cont		X	X	Brake Linings	Disassemble as required to inspect brake linings for wear, debonding, and glazing. For brakes that stop the movement of the load under normal operating conditions, disassembly, as required, shall be done annually. For other brakes (e. g., holding brakes), disassemble as required at every second “C” inspection.					
26	X	X	X	Air Brake System	Inspect system for damage, for evidence of binding, loose, and worn components, and for proper lubrication. Inspect brake linings and discs for wear, and drums or rotors for smoothness and for evidence of overheating. Inspect brakes for proper settings, and for alignment of shoes, calipers, and bands. Inspect air lines for damage and evidence of loose connections. During operation, verify proper release, engagement, and stopping action in both directions of motion. Verify proper operation of the air application valves and inspect air application valves and air lines for leaks.					
		X	X	Brake Linings	Disassemble as required to inspect brake linings for wear, debonding, and glazing. For hoist brakes that stop the movement of the load under normal operation conditions, this shall be done annually. For other hoist brakes (i.e., holding brakes) and for rotate and travel brakes (including chassis travel brakes), disassemble as required at every second “C” inspection.					
27 a	X	X	X	Electric Magnetic Brake System (Shoe Type Brakes)	Inspect system for damage, for evidence of binding, loose, and worn components, and for proper lubrication. Inspect brake linings for wear, and drums for smoothness and for evidence of overheating. Inspect brakes for proper settings and for alignment of brake shoes. Inspect wiring for damage or deterioration, and for evidence of loose connections. During operation, inspect for proper release, engagement, and stopping action in both directions of motion and timing of release and engagement. Inspect for evidence of overheating or other evidence of incomplete brake release.					
		X	X	Brake Linings	Disassemble as required to inspect brake linings for wear, debonding, and glazing. For hoist brakes that stop the movement of the load under normal operation conditions, this shall be done annually. For other hoist brakes (i.e., holding brakes) and for rotate and travel brakes, disassemble as required at every second “C” inspection.					

MAINTENANCE INSPECTION SPECIFICATION AND RECORD FOR CATEGORY 1 and 4 CRANES

SHEET__5__ OF _____

Crane

Item No	Inspection Type A	Inspection Type B	Inspection Type C	Items to be Inspected	Maintenance Inspection Specification	System Inspected	Condition S	Condition U	Condition C	Condition NA
27 b	X	X	X	Electric Magnetic Brake System (Disc Type Brakes)	Inspect brake housings for damage or evidence of loose hardware. Inspect brakes for proper settings. During operation, verify proper release, engagement, alignment of components, and stopping action in both directions of motion and timing of release and engagement. Inspect for vibration and overheating. Listen for abnormal noise.					
		X	X	Internal Brake Components	Disassemble as required to inspect brake linings for wear, debonding, alignment of components, or glazing or for damaged brake discs, splines, or other internal components. For hoist brakes that stop the movement of the load under normal operation conditions, this shall be done annually. For other hoist brakes (i.e., holding brakes) and for rotate and travel brakes, disassemble as required at every second “C” inspection.					
28		X	X	Shafts and Couplings, including couplings integral to motor/speed reducer assemblies.	Inspect for damage, for leaking seals, and for evidence of loose keys, coupling bolts, and covers. During operation, inspect for vibration and other evidence of misalignment or damaged components. Listen for abnormal noise. Inspect for evidence of bearing damage, overheating, and abnormal wear. Inspect pillow blocks for damage, paying special attention to possible cracks in cast iron pillow blocks loaded in shear and tension, loose or missing fasteners, and cracks caused by overtensioned fasteners.					
			X	Boom, Hoist, and Single Rotate Drives	Verify coupling alignments are within OEM tolerances (not applicable to NEMA c, d, and p-face motors) at every second "C" inspection. Coupling alignment verification data shall be filed in the crane’s history file.					
29 a		X	X	Gearing (Boom, Hoist, Rotate, Travel) External Gears	Inspect for damaged or worn gears, for evidence of misalignment or loose keys, and for proper lubrication. During operation, listen for abnormal noise, and inspect for other evidence of possible damage. Inspect pillow blocks for damage, paying special attention to possible cracks in cast iron pillow blocks loaded in shear and tension, loose or missing fasteners, and cracks caused by overtensioned fasteners.					
29 b		X	X	Gearing (Boom, Hoist, Rotate, Travel) Internal Gears	Inspect for proper gear case lubricant level, leaks, and evidence of loose or missing mounting fasteners. Inspect breathers for restrictions. During operation, inspect for vibration, overheating, and other evidence of damaged internal components or misalignment. Listen for abnormal noise. Inspect for evidence of bearing damage, overheating, and abnormal wear.					
29 c		X	X	Internal Gears, Boom, Hoist, and Single Rotate Drives. (Not applicable to hydraulic mobile cranes.)	Monitor using an oil or vibration analysis program. The oil or vibration analysis shall be performed at least once each certification period with results analyzed by a qualified source. The results of the analysis shall be documented and retained in the equipment history file for the life of the component.					

MAINTENANCE INSPECTION SPECIFICATION AND RECORD FOR CATEGORY 1 and 4 CRANES

SHEET__6__ OF _____

Crane:

Item No	Inspection Type			Items to be Inspected	Maintenance Inspection Specification	System Inspected	Condition			
	A	B	C				S	U	C	NA
29 c cont			X	Internal Gears, Boom, Hoist, and Single Rotate Drives-Alternate. (Not applicable to hydraulic mobile cranes.)	As an alternative to oil or vibration analysis, internal gears shall be visually inspected for wear or damage and for evidence of misalignment. If all gears cannot be visually inspected through inspection ports or by video probe or similar inspection devices, the gear cases shall be disassembled for visual inspection. If this alternative is selected, perform inspections at every third "C" inspection. Document the results in equipment history file.					
29 d		X	X	Hydraulic Mobile Crane Hoist Drives (Also see Item # 35a)	Follow OEM service guidelines for disassembly, inspection, and replacement and/or repair of internal components such as gears, clutches, internal brake components, spline couplings, etc. Document OEM inspection/replacement interval and crane age in history files.					
30			X	Chains and Sprockets	Inspect chains for proper tension and lubrication, and for evidence of loose or worn links and pins. Inspect sprockets for worn or damaged teeth, for evidence of loose shafts and keys, and for proper lubrication. During operation, listen for abnormal noise.					
31	X	X	X	Pawls, Ratchets, and Rotate Locks	Inspect for evidence of loose, damaged, or worn components. Inspect operating system for evidence of worn keys, loose fasteners, and broken springs. Operate pawls and rotate locks and inspect for proper setting. Verify limit switch and indicator light operation.					
32		X	X	Air Compressor	Inspect for cleanliness, for evidence of loose or missing mounting fasteners, for proper belt tension and wear, and for condition of filters. During operation, verify proper operation of unloader valve and pressure switch. Listen for abnormal noise and inspect for vibration.					
33	X	X	X	Pressure Vessel Inspection Certificate	Verify that pressure vessel inspection certificate is properly posted and current. (See UFC 3-430-07 or appropriate document for test procedure).					
34		X	X	Air Control System	Inspect valves, cylinders, lines, regulators, and gauges for damage or deterioration, and for evidence of loose or missing fasteners. During operation, inspect system for leaks, and verify proper operation of valves, regulators, and gauges.					
35		X	X	Hydraulic System	Inspect hydraulic system components, including motors, pumps, valves, cylinders, swivels, axle lockout devices, lines, regulators, and gauges for damage or deterioration, and for evidence of loose or missing fasteners. Inspect reservoir for proper fluid level. During operation, inspect system for leaks, and verify proper operation of motors, brakes, pumps, valves, cylinders, area definition devices, axle lockouts, regulators, and gauges.					

MAINTENANCE INSPECTION SPECIFICATION AND RECORD FOR CATEGORY 1 and 4 CRANES

SHEET__7__ OF _____

Crane

Item No	Inspection Type			Items to be Inspected	Maintenance Inspection Specification	System Inspected	Condition			
	A	B	C				S	U	C	NA
35 a		X	X	Hoist Hydraulic Systems (including boom lift and telescoping functions)	Monitor using an oil analysis program. The oil analysis shall be performed at least once each certification period with results analyzed by a qualified source. The results of the analysis shall be documented and retained in the equipment history file for the life of the component.					
36			X	Wheels and Axles	Inspect wheels for uneven wear, flat spots, chips, flange wear, and cracks, for evidence of loose or missing fasteners and bearing caps, and for proper lubrication. For mobile crane wheels, perform inspections in accordance with OEM recommendations. During operation, inspect for excessive movement between components, improper tracking, overheating, and other evidence of component wear or bearing damage. Listen for abnormal noise.					
37	X	X	X	Mobile Crane Chassis (Steering, and Suspension)	Inspect components for damage or deterioration, and for evidence of loose or missing fasteners and cracked welds. During operation, inspect for abnormal play and other evidence of component wear. Listen for abnormal noise.					
38	X	X	X	Tires	Inspect for proper air pressure. Inspect for damage, deterioration, or worn treads, and for evidence of loose or missing wheel lugs.					
39			X	Crawler System	Inspect crawler tracks for damaged or broken treads, missing or broken pins, for proper track adjustment, and for evidence of loose or missing fasteners. Inspect drive sprockets for broken teeth, worn idlers or rollers, damaged track adjusting screws, damaged or missing lubrication fittings, and for proper lubrication. During operation, inspect for abnormal play, overheating, and other evidence of bearing damage or component wear. Listen for abnormal noise.					
40			X	Travel Trucks, Equalizers, Gudgeons, Gudgeon Pins, and Retainers	Inspect for damage or deterioration, for evidence of loose or missing fasteners and cracked welds, and for proper lubrication. Verify proper operation.					
41		X	X	Outrigger Assemblies	Inspect for damage or deterioration, and for evidence of loose or missing fasteners. During operation, inspect system for leaks, and verify proper operation of cylinders.					
42			X	Structure (Portal Base, Boom (except mobile crane boom), A-Frame, Tower, Stiff legs, Sills, Support Pins, Retainers, Etc)	Inspect structural components for damaged, distorted, or deteriorated members (remove wire rope buffer blocks to ensure they are not hiding boom corrosion), and for evidence of loose or missing fasteners and cracked welds. Inspect support pins for proper lubrication. For damaged booms, see section 4. Ensure drain holes are clear.					

MAINTENANCE INSPECTION SPECIFICATION AND RECORD FOR CATEGORY 1 and 4 CRANES

SHEET__8__ OF _____

Crane

Item No	Inspection Type A	Inspection Type B	Inspection Type C	Items to be Inspected	Maintenance Inspection Specification	System Inspected	Condition S	Condition U	Condition C	Condition NA
43		X	X	Mobile Crane Boom	Inspect boom structure for damaged, distorted, or deteriorated members (remove wire rope buffer blocks to ensure they are not hiding boom corrosion), and for evidence of loose or missing fasteners and cracked welds. Inspect support pins for proper lubrication. For damaged booms, see section 4. Ensure drain holes are clear.					
43a	X	X	X	Telescoping Boom	Verify smooth operation, and inspect for proper lubrication, and evidence of abnormally worn or improperly adjusted wear pads. Ensure drain holes are clear.					
44		X	X	Handrails, Walkways, Ladders, and Personnel Safety Guards	Inspect for damage or deterioration, and for evidence of loose or missing fasteners and cracked welds.					
45			X	Counterweight	Inspect counterweight and counterweight support structure for damage or deterioration, and for evidence of loose or missing fasteners.					
46			X	Rotate Path Assembly	Inspect spider assembly and roller path for damage or deterioration, and for evidence of loose or missing fasteners and cracked welds. Inspect rollers for uneven wear, flat spots, chips, flange wear, cracks, or deterioration, for evidence of loose or missing fasteners, and for proper lubrication. During operation, verify free rotation of rollers and inspect for evidence of misalignment.					
47			X	Center Pin Steadiment and Support Assembly.	Inspect for damaged or deteriorated components, and for evidence of loose or missing fasteners and cracked welds. Inspect for proper lubrication.					
48		X	X	Center Collector Assembly (Electrical or Hydraulic)	Inspect for loose or bent supports. Inspect wiring for damage or deterioration, and for evidence of loose connections. Inspect for worn brushes and proper spring tension. Inspect slip rings for damage, deterioration, indications of excessive wear, streaking, arcing/overheating, and proper contact. During operation, verify brush to collector ring alignment. Inspect for loose hydraulic connections, defective tubing, and leaks.					

MAINTENANCE INSPECTION SPECIFICATION AND RECORD FOR CATEGORY 1 and 4 CRANES

SHEET__9__ OF _____

Crane

Item No	Inspection Type			Items to be Inspected	Maintenance Inspection Specification	System Inspected	Condition			
	A	B	C				S	U	C	NA
49		X	X	Slewing Ring Bearings	Inspect expelled lubricant for evidence of metal flakes or metal or plastic particles. Inspect fasteners for proper tightness. For portal and floating cranes, measure and record internal axial clearance (thrust direction) between bearing rollers (balls) and races. Refer to OEM's literature for method and acceptance/rejection criteria. For mobile cranes, follow OEM recommendations for bearing wear inspection. (If tightness verifications or clearance/wear checks are performed by maintenance personnel, the inspector shall perform an in-process review on a sample basis.) During operation, listen for abnormal noise and inspect for vibration.					
49a			X	Slewing Ring Bearings	Inspect fasteners for proper tightness. For cranes that have had a minimum of three consecutive satisfactory fastener tightness inspections with a torque wrench, tensioner, ultrasonic tension measuring device, or other measuring device that measures tensions, the fastener tightness inspection may be performed at every C inspection in lieu of every B inspection. A satisfactory tightness inspection is defined as no more than 1 loose fastener in any ring of fasteners for mobile cranes, or no more than 5 loose fasteners in any ring of fasteners for portal and floating cranes. All loose fasteners detected using this option shall be reported to Navy Crane Center, Code 03. Loose fasteners shall be identified by permanent fastener number/location on inner or outer ring.					

MAINTENANCE INSPECTION SPECIFICATION AND RECORD FOR CATEGORY 1 and 4 CRANES

SHEET__10__ OF _____

Crane

Item No	Inspection Type			Items to be Inspected	Maintenance Inspection Specification	System Inspected	Condition			
	A	B	C				S	U	C	NA
50			X	Wire Rope Drums, Followers, and Machinery Foundations	Inspect drums for distortion, cracks, worn grooves, and for evidence of loose or missing fasteners and cracked welds. Inspect wire rope followers for proper adjustment and alignment. Inspect bearings for evidence of damage, overheating, or abnormal wear. Inspect machinery foundations for damaged or deteriorated components, and for evidence of loose or missing fasteners and cracked welds. During operation, verify that at least two complete wraps of wire rope remain on grooved drums (at least three complete wraps on ungrooved drums) in all operating conditions, including extremes of hook or boom positions. Listen for abnormal noise. Inspect for vibration, overheating, and other evidence of component wear, bearing damage, or misalignment. Inspect pillow blocks for damage, paying special attention to possible cracks in cast iron pillow blocks loaded in shear and tension, loose or missing fasteners, and cracks caused by overtensioned fasteners.					
51		X	X	Sheaves	Inspect for abnormally worn or corrugated grooves, flat spots, abnormal play, and broken or cracked flanges. Inspect for evidence of loose or missing fasteners, keepers, and lubrication fittings. Gauge the wire rope grooves of all sheaves. Pay particular attention to sections of equalizer sheaves and saddles in contact with wire rope and where corrosion may develop because of poor drainage; these sections of equalizer sheaves and saddles shall be exposed and examined during C inspections for boom hoists and B inspections for all other hoists. During operation, verify free movement of all sheaves. Listen for abnormal noise. Inspect for abnormal play, overheating, and other evidence of component wear or bearing damage. Note: Inspection of extend/retract sheaves internal to telescoping booms may be limited to inspection through boom inspection ports unless there is evidence of deterioration or damage requiring disassembly of boom for complete inspection or replacement.					

MAINTENANCE INSPECTION SPECIFICATION AND RECORD FOR CATEGORY 1 and 4 CRANES

SHEET__11__ OF _____

Crane

Item No	Inspection Type			Items to be Inspected	Maintenance Inspection Specification	System Inspected	Condition			
	A	B	C				S	U	C	NA
52		X	X	Wire Rope, Fastenings, and Terminal Hardware. See next page for wire rope rejection criteria.	Thoroughly inspect the entire length of running ropes and standing ropes. The depth and detail of the inspection shall be that necessary to ensure that the entire rope is acceptable with special attention paid to areas of expected wear or damage, and to areas not normally visible to the operator during operation or pre-use check. During the inspection, pay the wire rope out as far as possible. For sections that can not be spooled off the drum, visual inspection of the wire rope on the drum is sufficient. Where it is not possible to pay out to the lowest layer, the crane shall not be used for applications where the uninspected rope (i.e., covered layers) would be spooled off the drum under load. The first layer of wire rope shall be properly reinstalled on the drum to provide adequate support for the upper layers. Remove wire rope dressing from selected areas exposed to significant wear, exposure, and abuse. Dimensional (diameter) measurements shall be taken at several places over the length of the rope. Record minimum dimension measured in the "remarks" block. Pay particular attention to sections in contact with equalizer sheaves and saddles or where corrosion may develop because of poor drainage; these sections shall be exposed and examined during C inspections for boom hoists and B inspections for all other hoists. Lubricate areas after inspection. Inspect for defects noted below and proper lubrication. Inspect poured sockets, wedge sockets, swage fittings, eyes, swivels, trunnions, and fasteners for undue looseness, wear, cracks, corrosion, and other damage. Undue looseness in poured sockets is defined as looseness or evidence of slippage of wires in the securing material, evidence of deterioration of the securing material, looseness of wire rope strands or wires adjacent to the socket or any looseness resulting from cracks or other defects in the basket. Evidence of looseness between the securing material and the basket resulting solely from seating of the material in the basket is acceptable. Drum end fittings need only be disconnected or disassembled when experience or visible indications deem it necessary. The Federal Specification for wire rope is RR-W-410. Note: Inspection of extend/retract cables internal to telescoping booms may be limited to inspection through boom inspection ports unless there is evidence of deterioration or damage requiring disassembly of boom for complete inspection or replacement..					

Wire Rope Rejection Criteria. Remove damaged portions (or replace entire length, if necessary) if any of the following are found:

1. Kinked, Birdcaged, Doglegged, or Crushed Sections. Kinked, birdcaged, doglegged, or crushed rope in straight runs where the core is missing or protrudes through or between strands, or where the rope does not fit properly in sheave or drum grooves. (This does not apply to runs around eyes, thimbles, or shackles.)

2. Flattened Sections. Flattened sections where the diameter across the flat is less than 5/6 of nominal diameter. (This does not apply to runs around eyes, thimbles, and shackles.)

3. Broken Wires

a. Running Ropes. Six randomly distributed broken wires in one lay or three broken wires in one strand in one lay. For rotation resistant wire rope, two in a length equal to six times the rope diameter or four in a length equal to 30 times the rope diameter. One outer wire broken at the point of contact with the core of the rope that has worked its way out of the rope structure and protrudes or loops out from the rope structure ("valley break"). For end connections, two broken wires within one lay length of the end connection.

b. Standing, Guy, and Boom Pendant Ropes. Three broken wires in one lay length in sections beyond end connection or two broken wires within one lay length of the end connection.

4. Loss in Diameter. Reduction from nominal diameter of more than five percent.

5. High Strand. High strand where the height exceeds 10 percent of the nominal diameter.

6. Corrosion. Corrosion such that significant pitting occurs on the surfaces of outside wires. Minor surface roughness on outside wires is acceptable provided no significant pitting occurs and the rope is not corroded internally. Significant pitting is defined as pitting that can not be removed by abrasive removal of less than 1/3 of the original diameter of individual outside wires.

7. Heat Damage. Evidence of heat damage from any cause.

8. Wavy Rope. Wavy rope (where the longitudinal axis of the wire rope takes the shape of a helix instead of a line) when the diameter of the envelope of the wave is greater than 133 percent of the diameter of the nominal diameter of the wire rope. Use ISO 4309 as a guide.

9. Accumulation of Defects. An accumulation of defects that in the judgment of the inspector creates an unsafe condition.

10. Splices. Wire rope shall not contain splices.

MAINTENANCE INSPECTION SPECIFICATION AND RECORD FOR CATEGORY 1 and 4 CRANES

SHEET__12__ OF _____

Crane

Item No	Inspection Type A	B	C	Items to be Inspected	Maintenance Inspection Specification	System Inspected	Condition S	U	C	NA
53	X	X	X	Hoist Blocks and Hooks	Inspect hoist blocks, cheek plates, swivels, trunnions, and lubrication fittings for damage or deterioration, cleanliness, freedom of movement, and for evidence of loose or missing fasteners. Inspect for loose, damaged, missing, or improperly sized retaining rings. Inspect hooks and mousing devices for damage. Inspect drip pans and gaskets for damage, proper clearance, and for evidence of loose or missing fasteners. Inspect for evidence of bearing damage, overheating, and abnormal wear. See appendix E for further inspections and tests.					
54	X	X	X	Insulated Link	Inspect link surface for conductive contaminants such as graphite, grease, metallic particles, or rust streaks. Inspect for damage. See appendix E, for additional inspection and testing requirements.					
55		X	X	Machinery House and Operator's Cab	Inspect for leaks, broken glass, deterioration, and cleanliness. Verify proper operation of louvers, doors, windows, windshield wipers, heaters (particularly combustion heaters), air conditioners, operator's chair, and communication equipment.					
56		X	X	Load Indicators, Load Warning Devices, Load Shutdown Devices	Inspect wiring for damage or deterioration, and for evidence of loose connections. These devices shall be tested for proper operation at this inspection or the CCIR/load test (mark N/A if performed at the CCIR/load test). Use SAE J-159 as a guide for calibration checks for (testing and tolerance) of category 1 and 4 mobile cranes. For other cranes, if not specified by device OEM, the preferred accuracy requirement for all devices is plus 10 percent minus 0 percent of the actual weight. Do not test beyond 131.25 percent of rated capacity (115.5 percent for mobile cranes, mobile boat hoists, and rubber-tired gantry cranes). If SAE guidelines or preferred accuracy requirement cannot be met, the minimum accuracy requirement is plus 10 percent minus 5 percent of the actual weight.					
57		X	X	Drum Rotation Indicators	Inspect wiring for damage or deterioration, and for evidence of loose connections. Verify proper operation.					
58		X	X	Radius/Boom Angle Indicator	Verify radius indications by comparing against measured radii at the minimum and maximum boom operating positions. Verify boom angle indications by comparing the indicated boom angle to the boom angle on the load chart corresponding to the boom length and measured radius. This test shall be accomplished at the minimum and maximum boom operating positions. This may be performed during the CCIR/load test in lieu of this inspection (mark N/A if performed at the CCIR/load test). Use SAE J-159 as a guide for calibration checks (testing and tolerance) of applicable systems.					
59	X	X	X	Capacity Signs and Load Ratings	Inspect capacity signs and brackets for damage or deterioration, and for evidence of loose or missing fasteners. Verify that load ratings are correct, are noted in pounds, and are visible or otherwise available to the operator and riggers.					
60	X	X	X	Fire Extinguishers	Verify inspection is current.					

MAINTENANCE INSPECTION SPECIFICATION AND RECORD FOR CATEGORY 1 and 4 CRANES

SHEET__13__ OF _____

Crane

Item No	Inspection Type A	Inspection Type B	Inspection Type C	Items to be Inspected	Maintenance Inspection Specification	System Inspected	Condition S	Condition U	Condition C	Condition NA
61		X	X	Controllers.	Inspect for broken or loose springs, cracked or loose operating levers and pitted or burned contact points and segments. Inspect for broken segment dividers and insulators, for excessive arcing, for evidence of worn or loose cams, pins, rollers, or chains, and for evidence of loose connections. Inspect for proper contact pressure. Inspect wiring for damage or deterioration, and for evidence of loose connections. Inspect for identifying label plates and indicators, and that crane and controller horizontal direction indicators match. Inspect such parts as bearings, star wheels, and pawls for proper lubrication. Inspect for proper spring return and neutral latching. During operation, verify proper sequencing of speed points and operation of controller indicating lights and deadman devices.					
62		X	X	Control Panels, Relays, Coils, Transfer and Disconnect Switches, Conductors and Electronic (Solid State) Drive Control Systems	Inspect (without removing) contacts for proper alignment, pitting, and evidence of excess heating and arcing. Inspect transfer and disconnect switches, conductors, coils and contact leads, and shunts for insulation breakdown, missing hardware, and evidence of overheating. Inspect wiring for damage, deterioration, and evidence of loose connections. Inspect fuses for proper ratings and type, for evidence of loose connections and overheating. Inspect overload devices for evidence of loose connections and overheating. Inspect circuit breakers and switches for cleanliness and proper operation. Inspect panel boards and arc shields for cracks, evidence of loose or missing fasteners, cleanliness, and moisture. Manually operate relays, switches, contactors, and interlocks and verify that all moving parts operate freely without binding or excessive play. Inspect enclosures for cleanliness or damage, and for evidence of loose or missing fasteners and gaskets. During operation, verify proper operation of panel indicating lights and contactor sequence. Verify proper operation of environmental controls (e.g., strip heaters, cooling fans). Inspect the electronic (solid state) drive control systems wiring for damage or deterioration, and for evidence of loose connections. Visually inspect (without removing) components for evidence of damage or overheating. Verify that the drive is dry and free of dust, dirt, and debris					
			X		Verify that the switch mechanism and/or handle on disconnects and safety switches cannot be moved to the energized or on position when locked in the de-energized or off position and that the handle properly indicates whether the switch is energized or de-energized.					
63		X	X	Resistors.	Inspect resistors, insulators, and brackets for damage, distortion, deterioration, and for evidence of loose or missing fasteners or overheating. Inspect wiring for damage or deterioration, and for evidence of loose connections.					

MAINTENANCE INSPECTION SPECIFICATION AND RECORD FOR CATEGORY 1 and 4 CRANES

SHEET__14_ OF _____

Crane

Item No	Inspection Type			Items to be Inspected	Maintenance Inspection Specification	System Inspected	Condition			
	A	B	C				S	U	C	NA
64		X	X	Limit and Bypass Switches	Remove covers and inspect electrical and mechanical components and wiring for damage or deterioration, and for evidence of loose connections. Inspect enclosures for evidence of moisture and arcing. Inspect drive and actuating components for damage or deterioration, for proper lubrication, and for evidence of loose or missing fasteners.					
65	X	X	X	Warning Devices, Operational Aides, General Safety Devices (Horns, Bells, Lights, Reflectors, etc.)	Inspect components and associated wiring for damage or deterioration, and for evidence of loose connections. The activity engineering organization may reduce the frequency of opening enclosures based on their exposure to weather and past findings. The reduced frequency shall be no less frequent than every sixth annual inspection. During operation, verify proper functioning of devices.					
66		X	X	Electrical Hardware and General Lighting	Inspect conduits, raceways, junction boxes, light fixtures, and associated wiring for damage or deterioration, and for evidence of loose connections. Verify operation of lights. The activity engineering organization may reduce the frequency of opening enclosures based on their exposure to weather or based on past findings. The reduced frequency shall be no less frequent than a “C” frequency.					
67		X	X	Electrical Cable Reels	Inspect wiring for damage or deterioration, and for evidence of loose connections. Inspect reel assembly for damage, deterioration, and evidence of loose or missing fasteners. Inspect slip rings for damage, deterioration, indications of excessive wear, streaking, arcing/overheating, and proper contact. Verify proper operation.					
68		X	X	Main and Auxiliary Generators.	Inspect generators and associated wiring for cleanliness, damage, deterioration, and evidence of loose connections. Inspect for proper lubrication. Inspect slip rings for damage, deterioration, indications of excessive wear, streaking, arcing/overheating, and proper contact. Inspect commutators for evidence of destructive commutation. Inspect brushes for proper brush tension and length, and for damage and deterioration. Inspect insulation for deterioration and evidence of overheating. Inspect drive belts or coupling for damage deterioration and evidence of misalignment and loose or missing fasteners. During operation, inspect for vibration, overheating, or other evidence of misaligned, worn, or damaged internal components or bearings. Listen for abnormal noise. Verify proper voltage output. Verify proper operation of environmental devices (e.g., strip heaters, cooling fans).					

MAINTENANCE INSPECTION SPECIFICATION AND RECORD FOR CATEGORY 1 and 4 CRANES

SHEET__15_ OF _____

Crane

Item No	Inspection Type			Items to be Inspected	Maintenance Inspection Specification	System Inspected	Condition			
	A	B	C				S	U	C	NA
69		X	X	Electric Motors (Boom, Hoist, Rotate, Travel)	Inspect motors and associated wiring for cleanliness, damage, deterioration, and evidence of loose connections. Inspect for proper lubrication. Inspect slip rings for damage, deterioration, indications of excessive wear, streaking, arcing/overheating, and proper contact. Inspect commutators for evidence of destructive commutation. Inspect brushes for proper brush tension and length, and for damage and deterioration. Inspect insulation, for deterioration and evidence of overheating. During operation, inspect for vibration, overheating, other evidence of misaligned, worn, or damaged internal components or bearings. Listen for abnormal noise. Verify proper operation of environmental devices, (e.g., strip hearers, cooling fans).					
70	X	X	X	Operation of Crane Controls	Verify proper operation of all hoist, rotate, and travel functions, primary and secondary limit switches, bypass switches, indicator lights, level indicators, and settings.					
71		X	X	Barge Compartments	Inspect compartments (voids) for standing water.					
72		X	X	Crane Davits	Inspect davit structure for proper operation and any signs of damage. Check davit rope for cuts, abnormal wear, heat damage, or discoloration. Check tackle for free movement and operation. Check hook and tackle attachments for signs of damage and corrosion.					
73		X	X	Lubrication and Servicing Records	Perform a review of lubrication and servicing records since the last MISR to ensure the lubrication and servicing was performed as specified.					

REMARKS:

MAINTENANCE INSPECTION SPECIFICATION AND RECORD FOR CATEGORY 1 and 4 CRANES

SHEET_____ OF _____

Crane

Item No	Inspection Type			Items to be Inspected	Maintenance Inspection Specification	System Inspected	Condition			
	A	B	C				S	U	C	NA

REMARKS:

MAINTENANCE INSPECTION SPECIFICATION AND RECORD
FOR CATEGORY 1 and 4 CRANES
UNSATISFACTORY ITEMS SHEET____ OF_____

Crane

NOTE: DESCRIBE ITEMS FOUND UNSATISFACTORY AND LIST SRO NUMBER ISSUED FOR CORRECTIVE ACTION. SIGN AND DATE TO VERIFY THAT THE DEFICIENCY HAS BEEN CORRECTED OR ACCEPTED AS IS. IDENTIFY DEFERRED ITEMS BY ANNOTATING A "D" IN THE SRO BLOCK. (SEE SECTION 2 FOR REQUIREMENTS FOR DEFERRAL OF WORK.)

Item No.	Deficiency	SRO No.	Verification of Correction (Signature and Date)

Mechanical Inspector (Signature):	Date:	Electrical Inspector (Signature):	Date:

MAINTENANCE INSPECTION SPECIFICATION AND RECORD
FOR CATEGORY 1 and 4 CRANES
BRAKE DATA

SHEET_____ OF _____

CRANE:

NOTE TO INSPECTOR: Fill in applicable data as recommended by the brake and/or crane OEM. Record actual measurement inspected in "INSP" block. If adjustments are made, record adjusted setting in "ADJ" block. Otherwise indicate "NA". List repair document number and corrective action required under remarks.

BRAKE	TYPE	SPRING LENGTH/ TORQUE SETTING				AIR GAP/ PLUNGER STROKE				LINING THICKNESS	
		MIN	MAX	ACTUAL		MIN	MAX	ACTUAL		MIN	ACT
				INSP	ADJ			INSP	ADJ		

MAINTENANCE INSPECTION SPECIFICATION AND RECORD

FOR CATEGORY 1 and 4 CRANES

BRAKE DATA

SHEET_____ OF _____

REMARKS:

APPENDIX D
ANNUAL MAINTENANCE INSPECTION SPECIFICATION AND RECORD FOR CATEGORY 2 AND 3 CRANES

Notes:

1. The following are the minimum inspection requirements. Due to the various makes and models of cranes in the Navy inventory with unique or special components, these specifications may require additional instructions. Components need not be disassembled for inspection, except: (a) where noted specifically to disassemble; (b) where activity experience warrants disassembly of specific components; or (c) where problems indicated by these inspections require disassembly for further inspection. Where disassembly and reassembly are required, or for other detailed inspection guidelines, shop repair orders or other work documents shall be utilized (except for inspection covers) to properly document the necessary steps required for disassembly, reassembly, and/or other inspection guidelines. Deleting or reducing the frequency of these inspections requires Navy Crane Center approval (see paragraph 2.6 for exceptions). Justification shall be provided with the activity's request. Additional or more frequent inspections based upon activity experience or OEM recommendations may be performed at the discretion of the activity. Additional inspection requirements and recommendations for specific OEM's are also contained in CSAs and EDMs located on the Navy Crane Center web-site (https://portal.navfac.navy.mil/ncc).

2. These specifications include both non-operational and operational inspection criteria. Where necessary to ensure the safety of inspection and maintenance personnel, the crane shall be de-energized in accordance with approved lockout procedures.

3. For inspections that involve fluids (lubricants, coolants, brake fluid, hydraulic fluid, etc.) or grease, inspect the fluid or grease for visual appearance, smell, and feel and inspect for indications of damaged or malfunctioning components.

4. Where an unsatisfactory condition is found, the item shall be identified on the "Unsatisfactory Items" sheet together with a statement of the condition observed. Corrective action in terms of adjustments, repairs, or replacements of items shall be detailed on a shop repair order or other appropriate document. (See NAVFAC P-300 for a sample shop repair order.)

5. Brake data measurements shall be recorded on the "Brake Data" sheet. Measurement attributes and criteria shall be based on brake and/or crane OEM and/or activity engineering organization recommendations. In addition to minimum and maximum settings, a preferred setting shall be specified where appropriate. Where measurements are inaccessible without disassembly, those measurements need only be taken when the brake is disassembled.

6. Where measurements are specified by the activity engineering organization, these measurements shall be recorded. Wire rope dimensional measurements and chain length measurements shall be recorded.

7. As an alternative to the above dimensional measurements, gages may be used if supplied by the OEM or as approved by the activity engineering organization. If gages are used, the gage part number or drawing number shall be recorded on the Maintenance Inspection Specification and Record.

8. Where an inspection item applies to multiple components (e.g., main hoist, auxiliary hoist), each component shall be identified in the "system inspected" column.

9. The inspection criteria address most of the features and components on typical cranes. If a crane is equipped with features or components not specifically covered by these requirements, those features and components shall be inspected (where inspection is practical, as determined by the activity engineering organization and approved by the certifying official) for proper condition and operation, e.g., emergency dynamic braking, motor overspeed and over temperature sensors, travel and rotate limit switches, and micro drives.

10. Where “NA” is used to note that an inspection criterion does not apply due to a reason other than the component or feature is not present on the crane, the reason for the “NA” shall be entered on the “Remarks” sheet. For example, if an “NA” is entered in item 13b, electric magnetic brake system (disc type brakes) due to the crane having a mechanical load brake and this not being the sixth annual inspection, these facts shall be noted on the “Remarks” sheet.

ANNUAL MAINTENANCE INSPECTION SPECIFICATION AND RECORD FOR CATEGORY 2 AND 3 CRANES SHEET__1___ OF _____

Crane	Type	Manufacturer	Capacity

Prior Inspection	Current Inspection	Legend: Check under condition
DATE	DATE	S = Satisfactory C = Corrected (If deferred, leave blank and identify on Unsatisfactory Items sheet) U = Unsatisfactory NA = Not Applicable

Item No	Items to be Inspected	Maintenance Inspection Specification	System Inspected	Condition			
				S	U	C	NA
1	Structure (Bridge Girders, Trolley, Trucks, Equalizer Beams, Gantry, Boom, Jib, Pillar, Etc.)	Inspect structural components for damage, distortion, or deterioration, and for evidence of loose or missing fasteners and cracked welds. Inspect truck equalizer pins for proper lubrication. Ensure there is no interference between crane and building during operation. Ensure drain holes are clear for outdoor cranes.					
2	Rails and Tracks, including top running trolley rail and underhung trolley and runway beams (Not applicable to runway rails for top running bridge cranes and gantry cranes.)	Inspect rails, tracks, splices, switches, hanger rod assemblies, and end stops for damage, deterioration, visible misalignment, and for evidence of loose or missing fasteners and cracked welds. Inspect for abnormal wear or other evidence of bridge or trolley misalignment. For rail systems used by multiple cranes, this rail inspection may be independent of the crane inspection, but shall be performed annually and be current at the time of the cranes' certification.					
3	Handrails, Walkways, Ladders, and Personnel Safety Guards	Inspect for damage or deterioration, and for evidence of loose or missing fasteners and cracked welds.					
4	Bumpers	Inspect for damage or deterioration, and for evidence of loose or missing fasteners.					
5	Jib Boom Bearings	Inspect rotate bearings for proper lubrication. Rotate boom and inspect for evidence of bearing damage, overheating, and abnormal wear.					
6	Wheels and Axles	Inspect wheels for uneven wear, flat spots, chips, flange wear, or cracks, for evidence of loose or missing fasteners and bearing caps, and for proper lubrication. During operation, inspect for excessive movement between components, improper tracking, overheating, and other evidence of component wear or bearing damage. Listen for abnormal noise.					
7	Shafts and Couplings, including couplings integral to motor/speed reducer assemblies	Inspect for evidence of damage, misalignment, leaking seals, and loose keys, coupling bolts, and covers. During operation, inspect for vibration, overheating, and other evidence of misaligned, worn, or damaged components or bearings. Listen for abnormal noise. Inspect pillow blocks for damage, paying special attention to possible cracks in cast iron pillow blocks loaded in shear and tension, loose or missing fasteners, and cracks caused by overtensioned fasteners.					
	Shafts and Couplings (Hoist Drives)	Verify coupling alignments are within OEM tolerances at every eighth annual inspection (not applicable to NEMA c, d, and p-face motors, or similar configurations). Coupling alignment verification data shall be included in the crane's history file.					
8 a	Gearing (Hoist, Rotate, Travel) External Gears	Inspect for damaged or worn gears, for evidence of misalignment or loose keys, and for proper lubrication. During operation, listen for abnormal noise, and inspect for other evidence of possible damage. Inspect for evidence of bearing damage, overheating, and abnormal wear. Inspect pillow blocks for damage, paying special attention to possible cracks in cast iron pillow blocks loaded in shear and tension, loose or missing fasteners, and cracks caused by overtensioned fasteners.					

ANNUAL MAINTENANCE INSPECTION SPECIFICATION AND RECORD FOR CATEGORY 2 AND 3 CRANES SHEET__2___ OF _____

Crane	Type	Manufacturer	Capacity

Item No	Items to be Inspected	Maintenance Inspection Specification	System Inspected	Condition			
				S	U	C	NA
8 b	Gearing (Hoist, Rotate, Travel) Internal Gears, including clutches. (Not applicable to manual chain hoists).	Inspect gear case for proper lubricant level. Inspect for leaks and for evidence of loose or missing fasteners. Inspect breathers for restrictions. During operation, inspect for vibration, overheating, and other evidence of misaligned, worn, or damaged internal components or bearings. Listen for abnormal noise.					
	Hoist Gears (Not applicable to category 2 and 3 package hoist assemblies or manual chain hoists.)	Additionally, internal gearing for hoists shall be monitored by an oil or vibration analysis program. The oil or vibration analysis shall be performed at least once each certification period with results analyzed by a qualified source and documented and retained in the equipment history file for the life of the component.					
		As an alternative to oil or vibration analysis, internal gears shall be visually inspected for wear or damage and for evidence of misalignment. If all gears can not be visually inspected through inspection ports or by video probe or similar inspection devices, gear cases shall be disassembled for visual inspection. If this alternative is selected, perform at every tenth annual inspection.					
8 c	Gearing, Manual Chain Hoists	Inspect for evidence of worn, corroded, cracked, or distorted parts such as shafts, gears, bearings, pins, rollers, load sprockets, idler sprockets, or hand chain wheels. Manual chain hoists shall be disassembled at every sixth annual inspection for detailed inspection of above noted items.					
9 a	Mechanical Load Brakes - Powered Hoists	Inspect for proper lubricant level and for leaks. During operation, inspect for chattering, vibration, overheating, or other evidence of misaligned, worn, or damaged internal components. Listen for abnormal noise. For mechanical load brakes that can not be tested independently, disassemble at every tenth annual inspection and inspect for damage and deterioration. (See appendix E.)					
9 b	Mechanical Load Brakes – Manual Hoists	Inspect for evidence of worn, glazed, or oil contaminated friction discs; worn pawls, cams or ratchet; corroded, stretched, or broken pawl springs in brake mechanism. Manual hoist load brakes shall be disassembled at every sixth annual inspection for detailed inspection of above noted items.					
10	Mechanical Brakes	Inspect system for damage, for evidence of binding, loose, and worn components, and for proper lubrication. Disassemble as required to inspect brake linings for wear, debonding, and glazing, and drums for smoothness and for evidence of overheating. Inspect brakes for proper settings and for alignment of brake shoes. During operation, verify proper release, engagement, and stopping action in both directions of motion. Inspect for evidence of overheating. Note: For hoists without mechanical load brakes or self-locking worm gears, and where the brake stops the movement of the load, disassembly shall be done annually (quadrennially for cranes in the quadrennial program). For hoists with mechanical load brakes or self-locking worm gears, and for holding brakes and travel and rotate brakes, disassemble at every eighth annual inspection.					

ANNUAL MAINTENANCE INSPECTION SPECIFICATION AND RECORD FOR CATEGORY 2 AND 3 CRANES SHEET__3__ OF _____

Crane	Type	Manufacturer	Capacity

Item No	Items to be Inspected	Maintenance Inspection Specification	System Inspected	Condition			
				S	U	C	NA
11	Hydraulic Brake System	Inspect system for damage, for evidence of binding, loose, and worn components, and for proper lubrication. Disassemble as required to inspect brake linings for wear, debonding, and glazing, and drums for smoothness and for evidence of overheating. Inspect brakes for proper settings and for alignment of brake shoes. Inspect master cylinders for proper hydraulic brake fluid level. Inspect lines for damage, leakage, and evidence of loose connections. During operation, verify proper release, engagement, and stopping action in both directions of motion. Inspect for evidence of overheating. Note: For hoists without mechanical load brakes or self-locking worm gears, and where the brake stops the movement of the load, disassembly shall be done annually (quadrennially for cranes in the quadrennial program). For hoists with mechanical load brakes or self-locking worm gears, and for holding brakes and travel and rotate brakes, disassemble at every eighth annual inspection.					
12	Air Brake System	Inspect system for damage, for evidence of binding, loose, and worn components, and for proper lubrication. Disassemble as required to inspect brake linings and discs for wear, debonding, and glazing, and drums or rotors for smoothness and for evidence of overheating. Inspect brakes for proper settings and for alignment of shoes and calipers. Inspect air lines for damage and evidence of loose connections. During operation, verify proper release and engagement, and stopping action in both directions of motion. Inspect air lines and air application valves for proper operation and air leaks. Note: For hoists without mechanical load brakes or self-locking worm gears, and where the brake stops the movement of the load, disassembly shall be done annually (quadrennially for cranes in the quadrennial program). For hoists with mechanical load brakes or self-locking worm gears, and for holding brakes and travel and rotate brakes, disassemble at every eighth annual inspection.					
13 a	Electric Magnetic Brake System (Shoe and Band Type Brakes)	Inspect system for damage, for evidence of binding, loose, and worn components, and for proper lubrication. Disassemble as required to inspect linings for wear, debonding, and glazing, and brake drums for smoothness and for evidence of overheating. Inspect brakes for proper settings and alignment of brake shoes. Inspect wiring for damage or deterioration, and for evidence of loose connections. During operation, verify proper release, engagement, and stopping action in both directions of motion and timing of release and engagement. Inspect for evidence of overheating or other evidence of incomplete brake release. Note: For hoists without mechanical load brakes or self-locking worm gears, and where the brake stops the movement of the load, disassembly shall be done annually (quadrennially for cranes in the quadrennial program). For hoists with mechanical load brakes or self-locking worm gears, and for holding brakes and travel and rotate brakes, disassemble at every eighth annual inspection.					

ANNUAL MAINTENANCE INSPECTION SPECIFICATION AND RECORD FOR CATEGORY 2 AND 3 CRANES SHEET__4__ OF _____

Crane	Type	Manufacturer	Capacity

Item No	Items to be Inspected	Maintenance Inspection Specification	System Inspected	Condition			
				S	U	C	NA
13 b	Electric Magnetic Brake System (Disc Type Brakes)	Inspect brake housings for damage or evidence of loose hardware. Inspect brakes for proper settings. Inspect wiring for damage or deterioration, and for evidence of loose connections. Disassemble, as required, to inspect for damaged brake discs, splines, or other components, for glazing, debonding, alignment of components, and for proper brake lining thickness. During operation, verify proper release, engagement, alignment of components, and stopping action in both directions of motion and timing of release and engagement. Listen for abnormal noise, and inspect for vibration and overheating. Note: For hoists without mechanical load brakes or self-locking worm gears and where the brake stops the movement of the load, disassembly shall be done annually (quadrennially for cranes in the quadrennial program). For hoists with mechanical load brakes or self-locking worm gears, and for holding brakes and travel and rotate brakes, disassemble at every eighth annual inspection.					
13 c	Electric Magnetic Brake System (Caliper Brakes on Wire Rope Drums)	Inspect system for damage, for evidence of binding, loose and worn components, and for proper lubrication. Inspect brake linings for wear, glazing, debonding, and brake surfaces on drums for smoothness and for evidence of overheating. Inspect brakes for proper settings and alignment of calipers. Inspect wiring for damage or deterioration, and for evidence of loose connections. During operation, inspect for proper release and engagement and stopping action in both directions of motion and timing of release and engagement. For brakes with Belleville torque springs, record the number of cycles as shown on the brake cycle counter. Compare the total number of cycles applied to each brake actuator's Belleville springs to the allowable maximum number of cycles specified for that actuator and ensure that none of the springs have exceeded the maximum value. Record Belleville spring cycle limit and number of cycles in the equipment history file. (For brakes without cycle counters, the activity shall conservatively estimate the brake usage and ensure that the springs are replaced before their fatigue life is reached.) Note: For hoists without mechanical load brakes or self-locking worm gears and where the brake stops the movement of the load, disassembly shall be done annually (quadrennially for cranes in the quadrennial program). For hoists with mechanical load brakes or self-locking worm gears, and for holding brakes and travel and rotate brakes, disassemble at every eighth annual inspection.					
14	Sheaves	Inspect for abnormally worn or corrugated grooves, flat spots, abnormal play, and broken or cracked flanges. Inspect for evidence of loose or missing fasteners, keepers, and lubrication fittings. Gauge the wire rope grooves of all sheaves. Expose and examine sections of equalizer sheaves and saddles in contact with wire rope and where corrosion may develop because of poor drainage. During operation, verify free movement of all sheaves, and inspect for abnormal play, overheating, and other evidence of bearing or component wear or damage.					

ANNUAL MAINTENANCE INSPECTION SPECIFICATION AND RECORD FOR CATEGORY 2 AND 3 CRANES SHEET__5__ OF _____

Crane	Type	Manufacturer	Capacity

Item No	Items to be Inspected	Maintenance Inspection Specification	System Inspected	Condition			
				S	U	C	NA
15	Wire Rope Drum, Followers, and Machinery Foundations	Inspect drums for distortion, cracks, worn grooves, and for evidence of cracked welds and loose or missing fasteners. Inspect wire rope followers for proper adjustment and alignment. Inspect bearings for evidence of damage, overheating, or abnormal wear. Inspect machinery foundations for damage or deterioration, and for evidence of loose or missing fasteners and cracked welds. During operation, verify that at least two complete wraps of wire rope remain on grooved drums (at least three complete wraps on ungrooved drums) in all operating conditions. Listen for abnormal noise. Inspect for vibration, overheating, and other evidence of misaligned, worn or damaged components or bearings. Inspect pillow blocks for damage, paying special attention to possible cracks in cast iron pillow blocks loaded in shear and tension, loose or missing fasteners, and cracks caused by overtensioned fasteners.					
16	Wire Rope, Fastenings, and Terminal Hardware. See next page for wire rope rejection criteria.	Thoroughly inspect entire length of wire rope. The depth and detail of the inspection shall be that necessary to ensure that the entire rope is acceptable with special attention paid to areas of expected wear or damage, and to areas not normally visible to the operator during operation or pre-use check. During the inspection, pay the wire rope out as far as possible. For sections that can not be spooled off the drum, visual inspection of the wire rope on the drum is sufficient. Remove wire rope dressing from selected areas subjected to significant wear, exposure, and abuse. Dimensional (diameter) measurements shall be performed at several places over the length of the rope. Record minimum dimension measured in the “remarks” block. Expose and examine sections in contact with equalizer sheaves and saddles or where corrosion may develop because of poor drainage. Lubricate areas after inspection. Inspect sockets, swivels, trunnions, and connections for undue looseness, wear, cracks, corrosion, or other damage. Undue looseness in poured sockets is defined as looseness or evidence of slippage of wires in the securing material, evidence of deterioration of the securing material, looseness of wire rope strands or wires adjacent to the socket or any looseness resulting from cracks or other defects in the basket. Evidence of looseness between the securing material and the basket resulting solely from seating of the material in basket is acceptable. Drum end fittings need only be disconnected or disassembled when experience or visible indications deem it necessary. The Federal Specification for wire rope is RR-W-410.					
17	Load Chains and Sprockets	Inspect for damage or deterioration, and for evidence of loose or missing fasteners and cracked welds. Measure for increase in chain length. Record measurements or gage part/drawing number in the “remarks” block. Ensure chain is properly oriented with link welds facing away from load sprockets unless otherwise specified by the OEM. During operation, listen for abnormal noise. Inspect for overheating and other evidence of worn or damaged components and bearings.					
18	Hoist Blocks and Hooks (Including Hoist Mounting Hooks)	Inspect hoist blocks, cheek plates, swivels, trunnions, and lubrication fittings for damage or deterioration, cleanliness, freedom of movement, and for evidence of loose or missing fasteners. Inspect for loose, damaged, missing, or improperly sized retaining rings. Inspect hooks and mousing devices for damage. Inspect drip pans and gaskets for damage, proper clearance, and for evidence of loose or missing fasteners. Inspect for evidence of bearing damage, overheating, and abnormal wear. See appendix E for further inspection and test of hooks.					

Wire Rope Rejection Criteria. Remove damaged portions (or replace entire length, if necessary) if any of the following are found:

1. Kinked, Birdcaged, Doglegged, or Crushed Sections. Kinked, birdcaged, doglegged, or crushed rope in straight runs where the core is missing or protrudes through or between strands, or where the rope does not fit properly in sheave or drum grooves. (This does not apply to runs around eyes, thimbles, shackles).

2. Flattened Sections. Flattened sections where the diameter across the flat is less than 5/6 of nominal diameter. (This does not apply to runs around eyes, thimbles, and shackles.)

3. Broken Wires. Six randomly distributed broken wires in one lay or three broken wires in one strand in one lay. One outer wire broken at the point of contact with the core of the rope that has worked its way out of the rope structure and protrudes or loops out from the rope structure ("valley break"). For end connections, two broken wires within one lay length of the end connection.

4. Loss in Diameter. Reduction from nominal diameter of more than five percent.

5. High Strand. High strand where the height exceeds 10 percent of the nominal diameter.

6. Corrosion. Corrosion such that significant pitting occurs on the surfaces of outside wires. Minor surface roughness on outside wires is acceptable provided no significant pitting occurs and the rope is not corroded internally. Significant pitting is defined as pitting that can not be removed by abrasive removal of less than 1/3 of the original diameter of individual outside wires.

7. Heat Damage. Evidence of heat damage from any cause.

8. Wavy Rope. Wavy rope (where the longitudinal axis of the wire rope takes the shape of a helix instead of a line) when the diameter of the envelope of the wave is greater than 133 percent of the diameter of the nominal diameter of the wire rope. Use ISO 4309 as a guide.

9. Accumulation of Defects. An accumulation of defects that in the judgment of the inspector creates an unsafe condition.

10. Splices. Wire rope shall not contain splices.

ANNUAL MAINTENANCE INSPECTION SPECIFICATION AND RECORD FOR CATEGORY 2 AND 3 CRANES SHEET__6__ OF _____

Crane	Type	Manufacturer	Capacity

Item No	Items to be Inspected	Maintenance Inspection Specification	System Inspected	Condition			
				S	U	C	NA
19	Insulated Link	Inspect link surface for conductive contaminants such as graphite, grease, metallic particles, or rust streaks. Inspect for damage. See appendix E, for additional inspection and testing requirements for insulated links.					
20	Air Operating System	Inspect motors, valves, filters, water separators, cylinders, lines, regulators, and gauges for missing parts, damage, and evidence of loose or missing fasteners. Inspect for proper lubrication. Verify proper operation and inspect system for leaks.					
21	Runway and Trolley Electrification (Collector Bar, Festoon, and Cable Track Systems)	Inspect system and associated wiring for damage or deterioration, and for evidence of loose fasteners or connections (e.g. track joint assemblies, track hanger clamps, end clamps/stops, saddle assemblies, cable connectors, tow trolley, etc.). Inspect collector shoes, springs, and conductor bar surfaces for evidence of excessive wear and/or misalignment. Verify proper operation and that all moving parts operate freely without binding.					
21A	Crane Grounding	At eighth annual inspection, for all cranes where the bridge and trolley frames are grounded through the bridge and trolley wheels and their respective rails, perform a resistance check to determine the reliability of the crane's ground in a least four areas of the trolley and or runway. Resistances greater than five ohms require corrective action and/or activity engineering evaluation. Wheels and/or rails may require cleaning to reduce the resistance to less than five ohms. The resistance check shall be performed between both the load block and ground and between the pendant and ground. If there is no metallic pendant, the pendant to ground check will be omitted.					
22	Cable Reels	Inspect reel assembly and associated wiring for damage or deterioration, and for evidence of loose fasteners or connections. Inspect slip rings for damage, deterioration, indications of excessive wear, streaking or arcing/overheating, and proper contact. Verify proper operation.					
23	Electrical Hardware and General Lighting	Inspect conduits, raceways, junction boxes, light fixtures, and associated wiring for damage or deterioration, and for evidence of loose connections. Verify operation of lights. The activity engineering organization may reduce the frequency of opening enclosures based on their exposure to weather and past findings. The reduced frequency shall be no less frequent than every eighth annual inspection.					

ANNUAL MAINTENANCE INSPECTION SPECIFICATION AND RECORD FOR CATEGORY 2 AND 3 CRANES SHEET__7__ OF _____

Crane	Type	Manufacturer	Capacity

Item No	Items to be Inspected	Maintenance Inspection Specification	System Inspected	Condition			
				S	U	C	NA
24	Control Panels, Relays, Coils, Transfer and Disconnect Switches (including main disconnect switch), Conductors and Electronic (Solid State) Drive Control Systems	Inspect (without removing) contacts for proper alignment, pitting, and evidence of excess heating and arcing. Inspect transfer and disconnect switches, conductors, coils and contact leads, and shunts for insulation breakdown, missing hardware, and evidence of overheating. Inspect wiring for damage, deterioration, and evidence of loose connections. Inspect fuses for proper ratings and type, for evidence of loose connections and overheating. Inspect overload devices for evidence of loose connections and overheating. Inspect circuit breakers and switches for cleanliness and proper operation. Inspect panel boards and arc shields for cracks, evidence of loose or missing fasteners, cleanliness, and moisture. Manually operate relays, switches, contactors, and interlocks and verify that all moving parts operate freely without binding or excessive play. Inspect enclosures for cleanliness or damage, and for evidence of loose or missing fasteners, support components, and gaskets. During operation, verify proper operation of panel indicating lights and contactor sequence. Verify proper operation of environmental controls (e.g., strip heaters, cooling fans). Inspect the electronic (solid state) drive control systems wiring for damage or deterioration, and for evidence of loose connections. Visually inspect (without removing) components for evidence of damage or overheating. Verify that the drive is dry and free of dust, dirt, and debris. Ensure disconnect switches are not blocked and are accessible to personnel In accordance with National Electric Code NFPA 70.					
		At every eighth annual inspection, verify that the switch mechanism and/or handle on disconnects and safety switches cannot be moved to the energized or on position when locked in the de-energized or off position and that the handle properly indicates whether the switch is energized or de-energized.					
25	Controllers	Inspect cab and floor operated controllers for broken or loose springs, cracked or loose operating levers or push buttons, and pitted or burned contact points and segments. Inspect for broken segment dividers and insulators, proper contact pressure, excessive arcing, and worn or loose cams, pins, rollers, or chains, and for evidence of loose or missing fasteners. Inspect wiring for damage or deterioration, and for evidence of loose connections. Inspect pendant cable for proper securing hardware. Inspect for identifying label plates and direction indicators, and that crane and controller horizontal direction indicators match. Inspect such parts as bearings, star wheels, and pawls for proper lubrication. During operation, verify proper sequencing of speed points and operation of indicating lights, and deadman devices. Verify proper spring return and neutral latching.					
26	Resistors	Inspect resistors, insulators, and brackets for damage, distortion, or deterioration, and for evidence of loose or missing fasteners. Inspect wiring for damage or deterioration, and for evidence of loose connections. Inspect for evidence of overheating.					

ANNUAL MAINTENANCE INSPECTION SPECIFICATION AND RECORD FOR CATEGORY 2 AND 3 CRANES SHEET__8__ OF _____

Crane	Type	Manufacturer	Capacity

Item No	Items to be Inspected	Maintenance Inspection Specification	System Inspected	Condition			
				S	U	C	NA
27	Electric Motors (Hoist, Rotate, Travel)	Inspect motors and associated wiring for cleanliness, damage, or deterioration, and for evidence of loose connections. Inspect for proper lubrication. Inspect slip rings for damage and proper contact and commutators for evidence of destructive commutation. Inspect brushes for proper brush tension and length. Inspect insulation for deterioration and evidence of overheating. During operation, inspect for any abnormal vibration, overheating, or other evidence of misaligned, worn, or damaged internal components or bearings. Verify proper operation of environmental controls (e.g., strip heaters, cooling fans).					
28	Eddy Current Brakes	Inspect for cleanliness, damage, or deterioration, and for evidence of loose connections. Inspect for proper lubrication. Inspect wiring for damage or deterioration, and for evidence of loose connections. During operation, listen for any abnormal noise. Inspect for vibration, overheating, or other evidence of misaligned, worn, or damaged internal components or bearings.					
29	Limit and Bypass Switches	Remove covers and inspect electrical and mechanical components for damage or deterioration, and for evidence of loose connections. Inspect enclosures for evidence of moisture and arcing. Inspect wiring for damage or deterioration, and for evidence of loose connections. Inspect drive and actuating components for damage, deterioration, and proper lubrication, and for evidence of loose connections. During operation, verify proper functioning of primary and secondary limit switches, indicator lights, settings, and bypass switches.					
30	Operator's Cab	Inspect for leaks, broken glass, deterioration, and cleanliness. Inspect louvers, doors, windows, windshield wipers, heaters, air conditioners, operator's chair, and communication equipment for proper operation.					
31	Warning Devices, Operational Aides, General Safety Devices (Horns, Bells, Lights, etc.)	Inspect components and associated wiring for damage or deterioration, and for evidence of loose connections. The activity engineering organization may reduce the frequency of opening enclosures based on their exposure to weather and past findings. The reduced frequency shall be no less frequent than every eighth annual inspection. During operation, verify proper functioning of devices.					
32	Load Indicators, Load Warning Devices, Load Shutdown Devices	Inspect wiring for damage or deterioration, and for evidence of loose connections. During a load test year only, these devices shall be tested for proper operation at this inspection or the CCIR/load test (mark N/A if performed at the CCIR/load test). If not specified by the device OEM, the preferred accuracy requirement for all devices is plus 10 percent minus 0 percent of actual weight. If preferred accuracy requirement cannot be met, the minimum accuracy requirement is plus 10 percent minus 5 percent of the actual weight. Do not test beyond 131.25 percent of rated capacity. This inspection item does not apply to overload clutches; for overload clutches, see item 36.					

ANNUAL MAINTENANCE INSPECTION SPECIFICATION AND RECORD FOR CATEGORY 2 AND 3 CRANES SHEET__9__ OF _____

Crane	Type	Manufacturer	Capacity

Item No	Items to be Inspected	Maintenance Inspection Specification	System Inspected	Condition			
				S	U	C	NA
33	Capacity Signs and Load Ratings	Inspect capacity signs and brackets for damage or deterioration, and for evidence of loose or missing fasteners. Verify that load ratings are correct, are noted in pounds, and are posted in view of operator and riggers. In those instances where two or more hoists may be arranged on a single beam, such as an interlocking monorail system, verify that the capacity of the supporting beam is clearly marked to preclude an overload condition.					
34	Fire Extinguishers	Ensure inspection is current.					
35	Crane Davits	Inspect davit structure for proper operation and any signs of damage. Check davit rope for cuts, abnormal wear, heat damage, or discoloration. Check tackle for free movement and operation. Check hook and tackle attachments for signs of damage and corrosion.					
36	Overload Clutches	For air hoists that are not equipped with limit switches, follow OEM procedure if available. If no OEM procedure is available, operationally inspect overload clutch by running the stop or block into the upper hoist frame at slowest possible speed. While continuing to hoist, listen for a clutching noise. If no clutching noise is heard, contact the hoist OEM for further evaluation. If a test weight is used, do not test beyond 131.25 percent of rated capacity. Due to the wide variation in overload clutch settings for various models and vintages of electric hoists, and the large amount of torque that can be produced by a motor in a locked rotor condition, testing of overload clutches for electric hoists shall not be performed.					
37	Lubrication and Servicing Records	Perform a review of lubrication and servicing records since the last Annual MISR to ensure the lubrication and servicing was performed as specified.					

REMARKS:

ANNUAL MAINTENANCE INSPECTION SPECIFICATION AND RECORD FOR CATEGORY 2 AND 3 CRANES SHEET_____ OF _____

Crane	Type	Manufacturer	Capacity

Item No	Items to be Inspected	Maintenance Inspection Specification	System Inspected	Condition			
				S	U	C	NA

REMARKS:

ANNUAL MAINTENANCE INSPECTION SPECIFICATION AND RECORD
FOR CATEGORY 2 AND 3 CRANES
UNSATISFACTORY ITEMS

SHEET_____ OF _____

Crane

NOTE: DESCRIBE ITEMS FOUND UNSATISFACTORY AND LIST SRO NUMBER ISSUED FOR CORRECTIVE ACTION. SIGN AND DATE TO VERIFY THAT THE DEFICIENCY HAS BEEN CORRECTED OR ACCEPTED AS IS. IDENTIFY DEFERRED ITEMS BY ANNOTATING A "D" IN THE SRO BLOCK. (SEE SECTION 2 FOR REQUIREMENTS FOR DEFERRAL OF WORK.)

Item No.	Deficiency	SRO No.	Verification of Correction (Signature and Date)

Mechanical Inspector (Signature):	Date:	Electrical Inspector (Signature):	Date:

MAINTENANCE INSPECTION SPECIFICATION AND RECORD
FOR CATEGORY 2 AND 3 CRANES
BRAKE DATA

SHEET_____ OF _____

CRANE:

NOTE TO INSPECTOR : Fill in applicable data as recommended by the brake and/or crane OEM. Record actual measurement inspected in "INSP" block. If adjustments are made, record adjusted setting in "ADJ" block. Otherwise indicate "NA". List repair document number and corrective action required under remarks.

BRAKE	TYPE	SPRING LENGTH/ TORQUE SETTING				AIR GAP/ PLUNGER STROKE				LINING THICKNESS	
		MIN	MAX	ACTUAL		MIN	MAX	ACTUAL		MIN	ACT
				INSP	ADJ			INSP	ADJ		

MAINTENANCE INSPECTION SPECIFICATION AND RECORD
FOR CATEGORY 2 AND 3 CRANES
BRAKE DATA

SHEET_____ OF _____

REMARKS:

APPENDIX E - CRANE TEST PROCEDURES

1 General Instructions.

1.1 Weight handling equipment shall be tested according to the appropriate paragraphs of these procedures depending on the type of equipment. The sequence of testing shall be at the option of the test director except that the no-load test shall be performed first. Except as noted, the nominal test load shall be 125 percent of rated capacity (105 percent for mobile cranes, locomotive cranes, aircraft crash cranes, mobile boat hoists, rubber-tired gantry cranes, and category 4 cranes). Because of the various makes and models of cranes in the Navy inventory, it is not possible to include specific tests for each individual crane or component. However, activities shall ensure that all components and features that affect load bearing, load control, or operational safety are properly tested (where testing is practical, as determined by the activity engineering organization and approved by the certifying official) and documented on the certification form. Load testing with loads above the limits specified herein is not authorized.

1.2 All test results shall be entered on the Certification of Load Test and Condition Inspection (figure 3-1) for applicable items according to crane type. Appropriate entries shall be recorded in each space. If a space does not pertain to the particular crane being tested, the entry shall be recorded as Not Applicable (NA).

1.3 The inspector shall assist the test director by checking during the load test for improper operation or poor condition of safety devices, electrical components, mechanical equipment, and structural assemblies. Observed defects critical to continued testing shall be reported immediately to the test director who shall suspend testing until the deficiency is corrected. Where a test paragraph directs the test director to observe for lowering of the load, measurements, markings, or some other direct indication to ensure that the test load has not lowered are required

1.4 Inspection and Testing of Hook Assemblies.

Note: These criteria apply to both the load hook and the hoist mounting hook, if the activity treats hook-mounted hoists as category 2 or 3 cranes. The hook nondestructive test (NDT) noted in paragraph 1.4.4 is not required for manual hoists.

1.4.1 Annual Visual Inspection. Inspect for evidence of wear in swivels and pins, and for proper operation and condition of safety latches. Inspect for corrosion, deformation, and wear. Inspect for such other conditions as nicks, cracks, or gouges. All cracks shall be removed. Other conditions shall be removed or, for questionable conditions, referred to the activity engineering organization for resolution. Removal of defects shall be by grinding only. Correction of defects by use of heat or welding is not permitted. The hook shall be removed from service if there is any bending or twisting of the hook exceeding 10 degrees (or as recommended by the OEM) from the plane of the unbent hook. No attempt shall be made to straighten bent or twisted hooks. Grinding shall follow the contour of the piece, blending with a maximum 1:3 (i.e., maximum rise to run) taper. Removal of cracks shall be verified by nondestructive test as described in paragraph 1.4.4. Removal of defects as specified will not require load test and recertification. Where normal wear or

removal of defects results in a reduction of 10 percent or more of the OEM's nominal dimension (or as recommended by the OEM if more restrictive), the hook shall be discarded. Hooks and nuts shall not be painted or plated, but a clear corrosion preventative coating may be applied.

1.4.2 Hook Throat Spread. Hooks shall be measured for hook throat spread before and after load test. A throat dimension base measurement shall be established by installing two tram points and measuring the distance between these tram points. This base dimension shall be retained in the equipment history file for the life of the hook. The distance between tram points shall be measured before and after load test. Hooks showing an increase in the throat opening by more than five percent from the base measurement shall be discarded.

1.4.3 Hook Disassembly and Visual Inspection. In conjunction with the hook NDT (and as noted below in paragraph 1.4.3.1), the hook, retaining nut or eye pin (and swivel eye bar as applicable), and bearings shall be disassembled from the block and thoroughly inspected. The hook and retaining nut shall be visually inspected for thread wear and all components shall be inspected for corrosion damage. Block bearing plates shall be visually inspected for cracks, wear, or other damage. Bearings shall be inspected for evidence of unusual wear and free rotation. All components shall be lubricated as required during assembly.

1.4.3.1 Special Disassembly Requirements for Forged Carbon Steel Hooks and Hooks on Manual Hoists. For forged carbon steel hooks and for hooks on manual hoists, the following additional disassembly and inspection requirements apply:

a. The activity engineering or inspection organization shall determine whether operating conditions warrant disassembly and inspection of forged carbon steel hooks, nuts, and bearings at a more frequent periodicity than the hook NDT periodicity.

b. For forged carbon steel hooks subject to corrosive environments or outdoor exposures, disassemble for visual inspection the hook, nut, and bearing, as a minimum, every ninth "B" PM for category 1 and 4 cranes, and every second quadrennial load test for category 2 and 3 cranes between NDT's. Disassemble hooks on manual hoists subject to corrosive environments or outdoor exposures, as a minimum, at every second quadrennial load test. The activity engineering organization may authorize the performance of this special disassembly and inspection on a less frequent periodicity based on past experience and inspection findings.

1.4.4 Hook NDT. The entire hook and eye pin or swivel eye bar as applicable, shall be NDT'd for defects according to the following periodicity based on the type of hook noted below. NDT of hook nuts is not required. The type of hook shall be documented in the equipment history file. The NDT is valid for the number of certification periods noted below:

Forged Carbon Steel: 24 certification periods.

Forged Alloy Steel: 8 certification periods.

Cast Carbon Steel or Cast Alloy Steel: 6 certification periods.

Bronze or Stainless Steel: 6 certification periods.

Notes:
1. If the material type and/or manufacturing method cannot be determined: for hook capacities greater than 30 tons, the hook shall be treated as a cast hook; for hook capacities of 30 tons or less, the hook shall be treated as a forged alloy steel hook after it is determined to not be a stainless steel or bronze hook.

2. If the OEM capacity of a forged alloy hook installed on the crane is greater than the certified capacity of the crane, or if the number of lifts performed is documented to be less than 3000 per year, (e.g., a 50,000-pound OEM rated hook, installed on a 20,000-pound certified capacity crane, or a hook with a documented number of lifts at 1000 per year) then it may be possible to perform the required hook NDT on a less frequent periodicity than the above requirements. Requests for less frequent hook NDT periodicities shall be completely detailed and addressed to Navy Crane Center on an RCDR.

1.4.4.1 Hook NDT Methods. NDT shall be magnetic particle method in accordance with NAVSEA Technical Publication T9074-AS-GIB-010/271. ASTM A275 may be used with the following restrictions: DC yokes (including switchable AC/DC yokes used in the DC mode) and permanent magnet yokes shall not be used, automatic powder blowers or any other form of forced air other than from a hand-held bulb shall not be used for the application or removal of dry magnetic particles; arc strikes shall be removed; and equipment ammeters shall have an accuracy of +/- 5 percent of full scale (equipment ammeter accuracy other than that stated is acceptable provided the MT procedure states that a magnetic field indicator is used to establish and verify adequate field strength for all aspects of the inspection). For hooks of non-magnetic material, NDT shall be liquid penetrant (PT) method in accordance with ASTM E 1417 or T9074-AS-GIB-010/271. For PT testing of hooks containing stainless steels, titanium, or nickel-based alloys, total halogens, and sulphur used in the NDT process shall be controlled as specified in T9074-AS-GIB-010/271. If NDT cannot be performed on surfaces inside small holes (e.g. hook/nut captivation roll pin holes), those surfaces shall be visually inspected to the maximum extent practical. Acceptance criterion shall be no linear indications greater than 1/16 inch. Acceptance criteria for external hook threads may be based on the acceptance criteria in SAE standard J123. NDT shall be performed prior to load tests.

The activity engineering organization may evaluate for acceptance linear indications in non-load-bearing areas of the hook such as the hook tip. Additionally, the activity engineering organization may evaluate all linear indications for relevance in accordance with the applicable NAVSEA technical publication noted above.

1.4.5 NDT Quality Assurance Requirements. Navy activities with established NDT quality assurance programs that meet NAVSEA, NAVAIR, Fleet (or equivalent) quality program

requirements should be used as sources for NDT to the maximum extent practical. If a commercial NDT vendor is used for NDT, the following requirements apply:

a. The vendor shall provide a letter certifying that the vendor meets the requirements of ASTM E 543. The certification shall be current, within one year of the date the NDT was performed.

b. The vendor shall develop, and submit for review, procedures, including technique sheets specific to the types, shapes, and sizes of the parts being examined (e.g., shank hook, eye hook, duplex hook, eye pin, swivel eye bar). For the magnetic particle method, the procedures shall adequately describe the orientation of the hook,swivel eye bar, or eye pin with the magnetizing equipment. A Level III examiner who is independent of the vendor and is certified in the applicable NDT method shall review these procedures. Activities that do not staff NDT personnel may utilize another Navy activity or other Government organization, such as the Defense Contract Management Agency or Supervisor of Shipbuilding, for this review on a cost reimbursable basis.

c. Vendor certifications and approved procedures shall be retained on file for the life of the NDT period.

1.4.6 Hook Identification. Each hook and eye pin or swivel eye bar as applicable, shall be uniquely identified with some type of permanent marking in order to provide positive traceability to the NDT report. The marking on the hook and eye pin or swivel eye bar shall be visible with the hook installed on the crane or hoist. Where possible, the marking on the other components shall be visible with the hook installed on the crane or hoist. Markings shall be located where the strength of the hook will not be reduced.

1.5 Inspection and Testing of Insulated Links.

1.5.1 General Inspection. Ensure link surface is clean and that no conductive material exists on the outer surface of the link such as graphite grease, metallic particles, or rust streaks. Check for obvious mechanical damage. Minor nicks, cuts, tears or abrasions are acceptable on the outer cover.

1.5.2 Link Identification. Each link shall be uniquely identified with some type of permanent marking to provide positive traceability to its base tram measurement and NDT report.

1.5.3 Dimensional Inspection. Establish tram points across the dielectric structure of the link and measure base tram reading before initial installation of the link. Measure the distance between the tram points before and after the load test. Compare the measurement to the base tram measurement. Reject link if measurement exceeds the base tram measurement by more than one percent.

1.5.4 Link Disassembly, and Nondestructive Test (NDT). Disassemble the link, connecting stud(s), hook, and nut in conjunction with hook disassembly. Perform a visual inspection of the metal link ends for thread damage, wear, and corrosion. Apply

a temporary sealing tape over the threaded holes to prevent moisture entry into the link during the disassembled period. Perform a magnetic particle inspection of the stud in accordance with ASTM A 275 or NAVSEA Technical Publication T9074-AS-GIB-010/271. Acceptance criterion shall be no linear indications greater than 1/16 inch. The NDT quality assurance requirements noted above for hooks apply.

1.5.5 Electrical Test. After reassembly of the link on the crane, and at every annual certification, apply a minimum of 10,000 volts across the insulated link and measure leakage current. Leakage shall not exceed 70 microamps per 1,000 volts.

1.6 Prerequisites to Load Testing.

1.6.1 Test Area. A safe test area shall be selected and all traffic and unauthorized personnel and equipment shall be cleared from test area. This test area shall be roped off or otherwise secured to prevent entry of unauthorized personnel and equipment.

1.6.2 Rigging. Rigging gear shall conform to the requirements of section 14.

1.6.3 Crane Tracks and Rails. Portal crane tracks (and runway rails for top running bridge cranes, gantry cranes, and wall cranes) to be used during crane load tests shall be certified, along with associated supports and foundations, per NAVFACINST 11230.1. If the crane load test is also the load test for track/rail certification, the track/rail shall be given a control inspection prior to load testing and shall have no catastrophic defects as defined by NAVFACINST 11230.1.

1.6.4 Pre-Test Briefing. The load test director shall conduct a pre-test briefing to ensure all load test team personnel understand the required procedures of the test.

1.7 Precautions During Load Testing. Prescribed tests are overload tests and extreme caution shall be observed at all times. Personnel shall remain clear of suspended loads and areas where they could be struck in the event of boom failure. The test load shall be raised only to a height sufficient to perform the test.

1.7.1 Test Speeds. During tests, normal operating speeds shall be employed. Rated speeds in accordance with specifications need not be attained. Emphasis shall be placed on the ability to safely control loads through all motions at normal speeds.

1.8 Duplex (Sister) Hook with Hole for Shackle Pin. For crane hooks with a hole used for lifting, both the hook barbs and the lifting hole shall be load tested. As a minimum, a ten-minute static test shall be completed. For similar crane attachments (in lieu of hooks) with holes for attachment, a ten-minute static test shall be completed for each hole. The requirements of paragraph 1.4 2 (Hook Throat Spread) do not apply to the lifting hole.

2. Portal and Floating Cranes.

2.1 No-Load Test.

2.1.1 Hoist Operating and Limit Switch Test. Accomplish for all hooks as follows:

Note: Position boom as required.

a. Controller Range. Raise the respective load hook through the controller range, stopping below upper limit switch (where applicable).

b. Upper Limit Switch. Raise load hook slowly into the upper limit switch to establish that limit switch is operating properly.

c. Upper Limit Switch Bypass. Raise hook slowly through the upper limit switch by using limit switch bypass (where applicable).

d. Backup Limit Switch. Raise hook slowly into backup limit switch (where applicable).

e. Lowering Control Range. Lower load hook below the upper limit switch through the lowering control range.

f. Lower Limit Switch. Lower load hook slowly into lower limit switch to establish that limit switch is operating properly.

2.1.1.1 Emergency Brakes on Wire Rope Drums (Shaft Failure Detection System). Simulate a system fault by interrupting (e.g., by use of a test switch) the motor encoder signal while lowering the hoist at the minimum speed necessary to simulate a system fault. Verify that the brake applies within the designed delay and that the hoist control is disabled in each direction. Restore the encoder signal path after the test. Repeat this test using the drum encoder. If the system uses components other than encoders (e.g., resolvers) to provide detection, the activity engineering organization shall develop the method for simulating the fault (e.g., forcing variables).

2.1.2 Boom. Boom operating and limit switch test shall be accomplished as follows:

a. Raise Boom. Raise boom through controller range, stopping below upper limit switch.

b. Upper Limit Switch. Raise boom slowly into the upper limit switch.

c. Limit Switch Bypass. Lower boom below limit switch and raise boom slowly through limit switch by using limit switch bypass (where applicable).

d. Backup Limit Switch. Raise boom slowly into backup limit switch (where applicable).

e. Controller Range. Lower boom through controller range, stopping above boom lower limit switch (where applicable).

f. Lower Limit Switch. Lower the boom slowly into the boom lower limit switch (where applicable).

g. Limit Switch Bypass. Raise boom above the lower limit switch and lower boom through limit switch by using limit switch bypass (where applicable).

2.1.2.1 Emergency Brake on Wire Rope Drum (Shaft Failure Detection System). Simulate a system fault by interrupting (e.g., by use of a test switch) the motor encoder signal while lowering the hoist at the minimum speed necessary to simulate a system fault. Verify that the brake applies within the designed delay and that the hoist control is disabled in each direction. Restore the encoder signal path after the test. Repeat this test using the drum encoder. If the system uses components other than encoders (e.g., resolvers) to provide detection, the activity engineering organization shall develop the method for simulating the fault (e.g., forcing variables).

2.1.3 Luffing Drum Pawl. Check luffing drum pawl for proper engagement in ratchet gear and with limit switch. Check the luffing drum pawl limit switch (if installed) for proper operation. With luffing drum pawl disengaged, check that boom hoist motor shuts off, brake engages, and indicator lights operate correctly (where applicable) by manually activating the limit switch. An alternate method is to engage the luffing drum pawl with the luffing hoist drive de-energized and then ensure that the drive cannot be energized in the downward direction.

CAUTION: Do not engage the luffing drum pawl into a downward rotating ratchet gear.

2.1.4 Rotation Lock (Wind Lock, Spud Lock). Engage rotation lock and inspect to ensure full engagement. Check that rotation lock limit switches (clockwise and counterclockwise) prevent engaging rotation drive (where applicable). Operate rotation lock bypass (clockwise and counterclockwise) to ensure proper operation (where applicable).

CAUTION: Use only enough power to check operation of bypass.

Note: Applicable switches may be operated manually to check for correct operation in lieu of engaging rotation lock.

CAUTION: Ensure rotation lock is disengaged prior to continuing test.

2.1.5 Rotation. Rotate clockwise and counterclockwise with boom at minimum radius.

2.1.6 Travel. Conduct travel test in accordance with paragraph 2.2.3.l, except without load.

2.1.7 Deadman Controls. Test all deadman controls (where installed). Start each motion. Release deadman control. Motion shall stop.

2.2 Load Test. The following is considered to be the most time and cost effective sequence of performing the required tests. Activities may vary the sequence as required.

2.2.1 Load Test for Variable Rated Cranes. All cranes shall be tested in accordance with paragraphs 2.2.2 through 2.2.5. In addition, variable rated cranes shall be tested in accordance with paragraph 2.3 with the appropriate test load at the maximum radius of the crane.

2.2.2 Stability Test. (For balanced deck design cranes only). During static and dynamic configurations with test load (paragraphs 2.2.3.a, b, d, and i) observe for clearance between the rollers and the upper and lower roller rails. If no clearance is observed, stability is satisfactory. If clearance is observed, perform the following:

a. The center pin nut clearance with the steadiment shall be set per crane OEM's specification.

b. In the static mode, position the boom parallel and perpendicular to the track (for floating cranes, position the boom parallel and perpendicular to the athwartships centerline of barge) and examine roller path for clearance.

c. If the loading conditions do not result in contact of the steadiment with the center pin nut, then the activity engineering organization shall evaluate for wear or structural defects. If the mechanical roller and structural assembly condition is determined to be unsatisfactory, then the crane shall be removed from service and corrective action initiated. Should the structural and mechanical roller assembly condition be determined satisfactory, then a record of the roller clearance data for various quadrants shall be recorded and incorporated in the equipment history file as a "crane roller clearance data standard of acceptance" and shall be utilized during future periodic testing. It is not necessary to repeat these roller clearance data readings on an annual basis unless there is a noticeable change with the clearance data or a major change did occur for this crane (e.g., alteration affecting crane stability).

d. If either loading condition noted in paragraph b results in contact of steadiment with the center pin nut, indicating a possible lack of crane stability, the crane shall be removed from service and a request for an engineering evaluation shall be forwarded to the Navy Crane Center.

2.2.3 Main and Boom Hoists, Rotate, and Travel. For the main hoist, rotate, and travel tests, the test load shall be the maximum test load for the crane. For the boom hoist tests, the test load and radius shall be such as to produce the maximum drum line pull. This may require a different test load than for the main hoist test.

a. Hoist and Boom Static Test. Raise test load to clear ground and hold for 10 minutes with boom at the maximum radius for the load lifted. Rotate load and hook

360 degrees clockwise and counter-clockwise to check bearing operation. Do not allow a hoist pawl (dog) to carry the load. Observe lowering of the test load, which may indicate malfunction of boom or hoisting components or holding brakes. If either hoist has primary and secondary holding brakes (i.e., where each brake is designed to individually hold the load), then the following tests shall be performed, for each applicable hoist, in lieu of the single 10 minute holding test noted above:

(1) Raise the test load and observe for proper timing sequence in the application of the primary and secondary brake when the controller is returned to neutral. Visually observe both hoist holding brakes to ensure correct operation. Raise the test load approximately one foot and hold open one of the brakes. Hold the load for 10 minutes and observe for lowering of the load, which may indicate malfunction of hoisting components or brake. Rotate load and hook 360 degrees clockwise and counter-clockwise to check bearing operation. Do not allow a hoist pawl (dog) to carry the load.

(2) Reset the brake held open and open the first brake tested. Again hold the load for 10 minutes observing for malfunctions. Reset the brake and verify the proper timing sequence of the setting of the brakes.

(3) If the brakes are designed to individually hold only the rated capacity (and not 125 percent), then the tests in subparagraphs (1) and (2) may be performed with a test load of 100 (+5/-0) percent of rated capacity and the certification shall be so noted. However, the brakes, acting together, shall demonstrate the ability to hold a 125 percent test load for a 10 minute period.

b. Hoist Dynamic Test. Raise and lower the test load and visually observe smooth control through the range. Stop the load during hoisting and lowering to verify the crane stops and holds the load. Check for proper operation of dynamic braking.

CAUTION: Dynamic braking will not stop motion.

c. Wire Rope Test for New Rope. The maximum working length of new wire rope shall be tested before being put in service. This shall be accomplished during either the static or dynamic test. (For cranes servicing drydocks, this will require lifting the test load into or out of the deepest drydock available.)

d. Boom Hoist Operating Test. Starting from maximum radius and with the load attached, raise the boom to minimum radius. Lower the boom to maximum radius. Visually observe for smooth motion through boom controller range. Stop the hoist during hoisting and lowering to verify the crane stops and holds the load. Check for proper operation of dynamic braking.

e. Hoist Foot Brake Test (Hydraulic or Mechanical). Lower test load, using first control point, then apply the foot brake. This shall stop the lowering motion of the test load.

CAUTION: Not applicable to load-sensitive reactor type hoist controls.

f. Boom Foot Brake Test (Hydraulic or Mechanical). Start with boom near maximum radius and with the test load approximately two feet from the ground surface. Lower test load using the first control point of the boom hoist. Apply the foot brake. This shall stop the lowering motion of the boom and test load.

CAUTION: Not applicable to load-sensitive reactor type hoist controls.

g. Hoist Loss of Power (Panic Test). This test is designed to test the reaction of a hoisting unit in the event of power failure during a lift. Hoist the test load approximately 10 feet above the ground. Lower test load at slow speed and, with the controller in the slow lowering position, disconnect the main power source by pushing the main power stop button or buttons, then return the controller to the neutral position. The test load shall stop lowering when the controller is placed in the neutral position.

CAUTION: This test is not to be performed on cranes that do not have powered down hoists. Additionally, the activity engineering organization shall review the system circuitry for cranes with electronic controls to assure that this test can be performed safely without damaging the control system. For cranes where the controls may be damaged, the activity engineering organization shall document their justification and fully describe the alternate tests performed. Alternate test procedures require Navy Crane Center approval.

h. Boom Loss of Power (Panic Test). This test is designed to test the reaction of the boom hoist in the event of power failure during a lift. Hoist the load approximately 10 feet above the ground with the boom near maximum radius. Lower the boom at slow speed, disconnect the main power source by pushing the main power stop button, then return the controller to the neutral position. The boom shall stop lowering when the controller is placed in the neutral position.

CAUTION: This test is not to be performed on cranes that do not have powered down hoists. Additionally, the activity engineering organization shall review the system circuitry for cranes with electronic controls to assure that this test can be performed safely without damaging the control system. For cranes where the controls may be damaged, the activity engineering organization shall document their justification and fully describe the alternate tests performed. Alternate test procedures require Navy Crane Center approval.

i. Rotation. Start with boom at maximum radius, rotate left and right 360 degrees with the boom hoist pawl (dog) engaged. However, if test area will not permit, two complete revolutions of the swing pinion are considered adequate. Test loads for floating cranes can be rotated over the water.

CAUTION: Exercise care when rotating loads over water. Ensure during the initial load test the floating crane has adequate draft readings per design data. When

testing a floating crane, monitor the radius to ensure the allowable radius is not exceeded due to listing of the barge.

j. Rotate Stopping Test. At maximum radius, rotate left and right at slow speed and apply the foot brake. The foot brake shall demonstrate ability to stop the rotating motion in a smooth, positive manner. For cranes without a foot applied rotate brake, rotate left and right, then return the controller to the neutral position. The rotate brakes or rotate drive, as applicable, shall stop the rotating motion of the crane in a smooth, positive manner. For floating cranes, where space permits, the parking brake shall demonstrate its ability to prevent rotation when applied with the boom at 45 degrees from the centerline of the barge. Hold for 10 minutes with brake applied.

k. Travel Test (Boom over side). This test shall be conducted with the boom at maximum allowable radius positioned 90 degrees with the crane rails and boom dog engaged. With the test load raised to clear the ground and with the boom dog engaged, travel in one direction a minimum of 50 feet. Repeat with boom on opposite side where conditions permit.

CAUTION: Operate crane at very slow travel speed. Ensure track and supporting foundation are sound and free of any obstruction over test travel area. (Not applicable to floating cranes).

l. Travel Test (Boom over front). With the test load raised to clear the ground and with the boom centered between the crane rails and boom dog engaged, travel in one direction a minimum of 50 feet. The crane shall accelerate and decelerate smoothly. All motions shall be smooth and positive. (Not applicable to floating cranes). Repeat with the boom rotated over the opposite end.

2.2.3.1 Emergency Brake on Wire Rope Drum (Shaft Failure Detection System).

a. Static Test. Test the ability of the hoist caliper disc brake to hold the test load after testing the other holding brake(s). Raise the test load approximately one foot off the ground. Do not engage the boom hoist pawl (if applicable). Depress the emergency stop pushbutton to disconnect the main power source and set the brakes. Manually release all brakes except the caliper disc brake. Hold the load for 10 minutes with the caliper disc brake. Observe for lowering of the load, which may indicate a malfunction of the hoisting components or the brake. Reset the other holding brake(s) to the applied condition. Energize the main power source. Verify that the load is held by the holding brake(s). Operate the hoist in each direction and verify proper operation of all controls and brakes.

b. Dynamic Test. Perform with a test load of 100 (+5/-0) percent of rated capacity. Raise the load to a sufficient height to perform the following test. Lower the load at the minimum speed necessary to simulate a shaft failure. Disable all hoist brakes except the wire rope drum brake and simulate a system fault by interrupting (e.g., test switch) the motor or drum encoder. The brake shall stop the load. If the system uses

components other than encoders (e.g., resolvers) to provide detection, the activity engineering organization shall develop the method for simulating the fault (e.g., forcing variables). Reset all brakes and/or programming. (CAUTION: Station appropriately trained personnel at each disabled hoist brake in case of failure of the drum brake to stop the load. These personnel shall be in constant contact with the load test director and prepared to safely engage the hoist brakes when directed.)

CAUTION: The activity engineering organization shall review the system circuitry for cranes with electronic controls to assure that this test can be performed safely without damaging the control system. For cranes where the controls may be damaged, the activity engineering organization shall document their justification and fully describe the alternate tests performed. Alternate test procedures require Navy Crane Center approval.

2.2.4 Auxiliary Hoist. Maximum test load for the hoist.

a. Static Test. Raise test load to clear ground and hold for 10 minutes without hoist pawl (dog) engaged at the maximum radius for that load. Rotate load and hook 360 degrees clockwise and counter-clockwise to check bearing operation. Observe for lowering of the load, which may occur, that may indicate malfunction of hoisting components or holding brakes. If the hoist has primary and secondary holding brakes, then the tests noted in subparagraphs 2.2.3.a (1), (2), and or (3), shall be performed in lieu of the 10 minute holding test noted above.

b. Dynamic Test. Raise and lower test load and visually observe smooth control through the range. Stop the load during hoisting and lowering to verify the crane stops and holds the load. Check for proper operation of dynamic braking.

c. Wire Rope Test for New Rope. The maximum working length of new wire rope shall be tested before being put in service. This shall be accomplished during either the static or dynamic test. (For cranes servicing drydocks, this will require lifting the test load into or out of the deepest drydock available.)

d. Foot Brake Test (Hydraulic or Mechanical). Lower test load using first control point, then apply the foot brake. This shall stop the lowering motion of the test load.

CAUTION: Not applicable to load-sensitive reactor type hoist controls.

e. Loss of Power (Panic Test). This test is designed to test the reaction of the hoisting unit in the event of power failure during a lift. Hoist the test load approximately 10 feet above the ground. Lower test load at slow speed and with the controller in the slow lowering position, disconnect the main power source by pushing the main power stop button or buttons, then return the controller to the neutral position. The test load shall stop lowering when the controller is placed in the neutral position.

CAUTION: This test shall not be performed on cranes that do not have powered down hoists. Additionally, the activity engineering organization shall review the system circuitry for cranes with electronic controls to assure that this test can be performed safely without damaging the control system. For cranes where the controls may be damaged, the activity engineering organization shall document their justification and fully describe the alternate tests performed. Alternate test procedures require Navy Crane Center approval.

2.2.4.1 Emergency Brake on Wire Rope Drum (Shaft Failure Detection System).

a. Static Test. Test the ability of the hoist caliper disc brake to hold the test load after testing the other holding brake(s). Raise the test load approximately one foot off the ground. Do not engage the boom hoist pawl (if applicable). Depress the emergency stop pushbutton to disconnect the main power source and set the brakes. Manually release all brakes except the caliper disc brake. Hold the load for 10 minutes with the caliper disc brake. Observe for lowering of the load, which may indicate a malfunction of the hoisting components or the brake. Reset the other holding brake(s) to the applied condition. Energize the main power source. Verify that the load is held by the holding brake(s). Operate the hoist in each direction and verify proper operation of all controls and brakes.

b. Dynamic Test. Perform with a test load of 100 (+5/-0) percent of rated capacity. Raise the load to a sufficient height to perform the following test. Lower the load at the minimum speed necessary to simulate a shaft failure. Disable all hoist brakes except the wire rope drum brake and simulate a system fault by interrupting (e.g., test switch) the motor or drum encoder. The brake shall stop the load. If the system uses components other than encoders (e.g., resolvers) to provide detection, the activity engineering organization shall develop the method for simulating the fault (e.g., forcing variables). Reset all brakes and/or programming. (CAUTION: Station appropriately trained personnel at each disabled hoist brake in case of failure of the drum brake to stop the load. These personnel shall be in constant contact with the load test director and prepared to safely engage the hoist brakes when directed.)

CAUTION: The activity engineering organization shall review the system circuitry for cranes with electronic controls to assure that this test can be performed safely without damaging the control system. For cranes where the controls may be damaged, the activity engineering organization shall document their justification and fully describe the alternate tests performed. Alternate test procedures require Navy Crane Center approval.

2.2.5 Whip Hoist. Maximum test load for the hoist.

a. Static Test. Raise test load to clear ground and hold for 10 minutes without hoist pawl (dog) engaged at the maximum radius for that load. Rotate load and hook 360 degrees clockwise and counter-clockwise to check operation of bearing. Observe for lowering of the load, which may indicate malfunction of hoisting components or holding brakes. If the hoist has primary and secondary holding

brakes, then the tests noted in subparagraphs 2.2.3.a (1), (2), and/or (3) shall be performed in lieu of the 10 minute holding test noted above.

b. Dynamic Test. Raise and lower test load and visually observe smooth control through the range. Stop the load during hoisting and lowering to verify the crane stops and holds the load. Check for proper operation of dynamic braking.

c. Wire Rope Test for New Rope. The maximum working length of new wire rope shall be tested before being put in service. This shall be accomplished during either the static or dynamic test. (For cranes servicing drydocks, this will require lifting the test load into or out of the deepest drydock available.)

d. Foot Brake Test (Hydraulic or Mechanical). Lower test load using first control point, then apply the foot brake. This shall stop the lowering motion of the test load.

CAUTION: Not applicable to load-sensitive reactor type hoist controls.

e. Loss of Power (Panic Test). This test is designed to test the reaction of a hoisting unit in the event of power failure during a lift. Hoist the test load approximately 10 feet above the ground. Lower test load at slow speed and, with the controller in the slow lowering position, disconnect the main power source by pushing the main power stop button, then return the controller to the neutral position. The test load shall stop lowering when the controller is placed in the neutral position.

CAUTION: This test shall not be performed on cranes that do not have powered down load hoists. Additionally, the activity engineering organization shall review the system circuitry for cranes with electronic controls to assure that this test can be performed safely without damaging the control system. For cranes where the controls may be damaged, the activity engineering organization shall document their justification and fully describe the alternate tests performed. Alternate test procedures require Navy Crane Center approval.

2.2.5.1 Emergency Brake on Wire Rope Drum (Shaft Failure Detection System).

a. Static Test. Test the ability of the hoist caliper disc brake to hold the test load after testing the other holding brake(s). Raise the test load approximately one foot off the ground. Do not engage the boom hoist pawl (if applicable). Depress the emergency stop pushbutton to disconnect the main power source and set the brakes. Manually release all brakes except the caliper disc brake. Hold the load for 10 minutes with the caliper disc brake. Observe for lowering of the load, which may indicate a malfunction of the hoisting components or the brake. Reset the other holding brake(s) to the applied condition. Energize the main power source. Verify that the load is held by the holding brake(s). Operate the hoist in each direction and verify proper operation of all controls and brakes.

b. Dynamic Test. Perform with a test load of 100 (+5/-0) percent of rated capacity. Raise the load to a sufficient height to perform the following test. Lower the load at the minimum speed necessary to simulate a shaft failure. Disable all hoist brakes except the wire rope drum brake and simulate a system fault by interrupting (e.g., test switch) the motor or drum encoder. The brake shall stop the load. If the system uses components other than encoders (e.g., resolvers) to provide detection, the activity engineering organization shall develop the method for simulating the fault (e.g., forcing variables). Reset all brakes and/or programming. (CAUTION: Station appropriately trained personnel at each disabled hoist brake in case of failure of the drum brake to stop the load. These personnel shall be in constant contact with the load test director and prepared to safely engage the hoist brakes when directed.)

CAUTION: The activity engineering organization shall review the system circuitry for cranes with electronic controls to assure that this test can be performed safely without damaging the control system. For cranes where the controls may be damaged, the activity engineering organization shall document their justification and fully describe the alternate tests performed. Alternate test procedures require Navy Crane Center approval.

2.3 Variable Rated Load Test. In addition to the tests prescribed in paragraph 2.2, variable rated cranes shall be tested with the appropriate test load at the maximum radius of the crane on the main hoist as follows:

2.3.1 Stability Test. (For balanced deck design cranes only). During testing in accordance with paragraphs 2.3.2, 2.3.3, and 2.3.6, observe for clearance between the rollers and the upper and lower roller rails. If no clearance is observed, stability is satisfactory. If clearance is observed perform the tests and take the necessary actions noted in paragraphs 2.2.2.a through d.

2.3.2 Static Test. Raise test load to clear ground and hold for 10 minutes with boom at maximum radius. Do not allow a hoist pawl (dog) to carry the load. Observe for lowering of the load, which may indicate malfunction of hoisting components or brakes.

2.3.3 Boom Hoist Operating Test. Starting from maximum radius and with the load attached, raise the boom to the maximum radius for the next higher load. Lower the boom. Observe for smooth hoisting and lowering motions through the controller range. Stop the hoist during hoisting and lowering to verify the crane stops and holds the load.

2.3.4 Boom Foot Brake Test (Hydraulic or Mechanical). Start with boom near maximum radius, and with the test load approximately two feet from the ground surface, lower test load, using first control point of the boom hoist. Apply the foot brake. This shall stop the lowering motion of the boom and test load.

CAUTION: Not applicable to load-sensitive reactor type hoist controls.

2.3.5 Automatic Boom Brake (Where applicable, i.e., Washington Crane Company). This brake is to prevent a "free fall" boom in case of failure of clutch, boom hoist control, and

foot brake. With the test load approximately four inches above the ground, set the brake firmly. Release the mechanical boom dog. Release the boom clutch by operating the boom hoist control. Slowly release the foot brake to the free position. Hold the test load with automatic brake for five minutes then lower test load by applying the boom hoist clutch and lowering with the controller operation.

2.3.6 Rotation. Start with boom at maximum radius, rotate left and right 360 degrees with the boom hoist pawl (dog) engaged. However, if test area will not permit, two complete revolutions of the swing pinion are considered adequate. Test loads for floating cranes can be rotated over the water.

CAUTION: Exercise care when rotating loads over water. Ensure during the initial load test the floating crane has adequate draft readings per design data. When testing a floating crane, monitor the radius to ensure the allowable radius is not exceeded due to listing of the barge.

3 Tower Cranes and Derricks.

3.1 General. Tower cranes and stiff leg derricks shall be tested in accordance with instructions for portal cranes under paragraph 2 (except for rotation testing which is described below).

3.2 Tower Crane and Derrick Rotation. Rotation testing shall be conducted in accordance with the rotation test for portal cranes through normal design operating arc.

4 Hammerhead Cranes.

4.1 Hammerhead Crane Hoists. Hoists shall be tested in combination(s) such that all structural, mechanical, and electrical components are tested in all possible configurations. Hoists shall be tested in accordance with applicable instructions for portal cranes.

4.2 Hammerhead Rotation. Rotation shall be tested in accordance with instructions for portal cranes.

4.3 Hammerhead Trolley Motion.

4.3.1 No-Load. Travel the allowable length of the trolley runway through the control range. Operate trolley into the limit switches at slow speed. Bring trolley back and by using the limit switch bypass, move trolley into the outboard rail stops. Repeat above procedure for inboard limit switches and rail stops.

4.3.2 Load Test. Raise test load to clear ground and move trolley to the maximum allowable radius. Hold test load for 10 minutes. Do not move trolley beyond the trolley limit switch. After the ten-minute holding test, travel the allowable length of the trolley runway.

4.4 Travel. Travel motion shall be tested in accordance with the instructions specified for portal cranes where applicable.

5 Mobile Cranes, Locomotive Cranes, Aircraft Crash Cranes, and Category 4 Cranes. These cranes are complex machines and the following requirements are not designed to test each and every component to its maximum stress state. Instead, the test is configured to safely and efficiently test the greatest number of critical components to the specified load level. Commercial truck mounted telescoping boom cranes shall be tested in accordance with paragraph 5.4. Lattice boom cranes shall be tested in accordance with paragraph 5.5. Articulating boom cranes shall be tested in accordance with paragraph 5.8. Test procedures for other category 4 cranes shall follow OEM procedures and recommendations. Where no procedures are provided by the OEM, procedures shall be developed by the activity engineering organization using the procedures of this subsection as a guide.

5.1 Test Load. The nominal test load shall be 105 percent of rated capacity. The rated capacity shall be the capacity shown on the posted load chart or as limited by other factors such as hook block capacity or wire rope line pull if the crane is not fully reeved. The test load includes the weight of (or deduction values for) the hook, block, slings, and ancillary lifting devices (and for some cranes hoist wire rope not accounted for in load charts), and the combined weight deduction values shall be subtracted from the nominal test load in order to determine the amount of test weights to be used. Follow OEM load chart instructions for weight deduction values. Check accuracy of load indicators where installed. If controlled assembly procedures, as described in section 3, are to be used in lieu of load test and recertification for change-out of ancillary equipment, the applicable ancillary equipment shall be tested during the annual certification testing.

5.2 Mobile Cranes Temporarily Mounted on Barges. The certifying official shall prescribe appropriate test conditions and precautions. Follow all requirements of section 3. During the load moment test, the rotate brake shall be tested to demonstrate its ability to prevent rotation when applied with the boom at 45 degrees from the centerline of the barge. Hold this position for 10 minutes with the brake set.

5.3 Pre-test Preparation. Select a test area that is level and free of ground obstructions. Extend outriggers or stabilizers as specified by the OEM, when so equipped. For cranes with variable outrigger/stabilizer or crawler positions, only the fully extended position requires testing, tests are not required for intermediate outrigger/stabilizer or crawler settings. For most truck and cruiser cranes, crane carrier shall be raised sufficiently to completely unload tires. Level crane as required by OEM's load chart. Ensure machine, including hydraulic system, is brought up to operating temperature before performing tests.

5.3.1 Cautions for Mobile Crane Tests.

a. Test personnel shall remain fully alert to wind, other weather, and visibility conditions that may jeopardize the safe performance of the tests.

b. Lift the test load only high enough to perform the required tests.

c. When lifting test loads, always lift the load well within the maximum radius and slowly boom down to the pre-measured radius stopping at least once to test the effectiveness of the boom brake or holding valve.

d. A crane outrigger may become light (start to rise up within the outrigger pad) and the outrigger pad may clear the ground during load testing (with the boom positioned over the opposite corner) depending on the make and model. Generally, this is normal and not an indication of tipping. However, if two outriggers exhibit this condition simultaneously the activity shall verify with the crane OEM that the crane exhibiting this condition is safe for use

e. Ensure all "on rubber" lifting requirements established by the OEM and activity are followed when lifting loads "on-rubber" (free-rated capacity). Attach taglines to the load to control oscillation. Extend outriggers and maintain minimal clearance (3 to 4 inches) above ground. Test personnel shall stand clear of tires during "on-rubber" load tests.

5.4 Telescoping Boom Cranes.

5.4.1 No-Load Tests.

5.4.1.1 Hoist(s).

a. Raise and lower each hook through the maximum possible working distance of hook travel. After lowering the hook, ensure the wire rope is packed tightly on the drum prior to proceeding with the load tests to prevent wire rope displacement and crushing.

b. Raise each hoist block into the limit switch (where installed) at slow speed. Ensure the anti-two block alarm operates or the hoist is disabled in accordance with the OEM's operating instructions. If the crane is equipped with control lockouts (also known as function limiters or kickouts), carefully ensure all additional functions that could also two block the hoist are disabled (e.g., telescope out, boom down) in accordance with the OEM's operating instructions.

c. Raise each hoist block beyond the limit switch by using the bypass switch (where installed).

5.4.1.2 Boom.

a. Raise and lower the boom through the full working range.

b. Extend and retract telescoping boom sections the full distance of travel. For latching boom cranes, ensure all boom extend modes operate properly and ensure all boom latching/pinning positions engage properly for each section.

5.4.1.3 Other Functions. Other functions including swing shall be operated through a minimum of one full cycle/revolution of major components; e.g. one full revolution of track crawlers, 360 degrees of upper rotation.

a. Test the work area limit switch (area definition device), if applicable.

5.4.2 Load Test. The load test consists of a maximum certified capacity test and a load moment test. In some cases, these tests may be combined. Additionally, a maximum line pull test is required for cranes that use multiple reeving configurations, and other appropriate tests are required for cranes that use ancillary equipment with Ancillary Equipment Procedures (AEPs) during the certification period. The sequence may be varied by the activity, however the following test sequence is recommended. For cranes with multiple reeving configurations, the maximum line pull test (paragraph 5.4.2.4.a) should be performed first.

5.4.2.1 Maximum Certified Capacity Test.

a. The test load shall be 105 percent of the maximum certified capacity of the crane. Determine the maximum permissible radius for the maximum certified capacity. Perform the test at the maximum boom length for this capacity and radius.

b. Raise the test load using the hoist.

c. Lower the test load and test the ability of the brake to control, stop, and hold the test load (10 minute hold).

d. Observe for any lowering that may occur, which may indicate a malfunction of boom or hoisting components, brakes, or outriggers. With the test load raised, rotate the hook 360 degrees clockwise and counter-clockwise to check bearing operation If the size of the test load precludes a full 360 degree rotation of the hook, perform the hook rotation test during the load moment test.

Note: Due to the number of layers of wire rope on the drum, some cranes may not be able to lift the test load per the OEM's load chart.. If the crane cannot lift the test load, check the OEM's hoist line pull for the particular model hoist and layer of rope. If hoist line pull (available torque) is the limiting factor, reduce the test load based on the hoist line pull limitation and perform the required test. Certify the crane based on the reduced test load (i.e., certified capacity is test load divided by 1.05). If the crane cannot lift the reduced test load, verify that the system hydraulic pressure and relief valves are set within OEM specifications. If the settings are within specification, contact the OEM.

e. Operate the boom from maximum radius to minimum radius. Repeat the test, operating the boom from minimum radius to maximum radius for the load applied.

5.4.2.2 Load Moment Test.

a. Test Configuration:

- Boom length - shortest length where all sections are partially extended, but not less than 50 percent total powered boom length (or latching section boom length).
- Maximum radius - the radius that creates the maximum load moment that will safely clear the outriggers/stabilizers/carrier through the complete swing range.
- The test load shall be 105 percent of OEM load chart capacity at this boom length and radius.

Note: For the purposes of this test, load moment is the product of capacity multiplied by radius. Cranes equipped with multiple boom modes must have multiple load charts checked to ensure the maximum load moment is selected.

b. Telescopic Component Slippage. Raise the test load using the hoist. Operate the boom from maximum radius (as defined above) to minimum radius for the load applied. Hold the load for 5 minutes without use of controls by the operator. Observe for any lowering that may occur, which may indicate a malfunction of boom or hoisting components, brakes, or outriggers. Lower the boom from minimum radius to maximum radius (as defined above) before proceeding to the next test.

c. Outrigger/Stabilizer Component Slippage. Swing the test load at slow speed through the complete swing range as allowed by the OEM, and apply the brake periodically during rotation. The brake shall demonstrate its ability to stop the rotating motion in a smooth, positive manner. Hold the load with the boom positioned over (or near as allowed by OEM) each outrigger/stabilizer for 5 minutes (holding over the center front outrigger/stabilizer is not required). Observe for any lowering that may occur, which may indicate a malfunction of boom or hoisting components, brakes, or outriggers. Swing the crane in the opposite direction through the complete swing range as allowed by the OEM.

Notes for telescopic and outrigger/stabilizer component slippage tests:

1. The significance of any lowering shall be evaluated by the activity engineering organization depending on operating requirements and safety.

2. For cranes equipped with outrigger locking devices but where activity operating procedures permit operation without the use of the locking devices, this test shall be performed with the locking devices disengaged.

3. If a latching boom crane's telescoping cylinder has the capability to telescope, retract or hold the boom while unpinned under load, it shall be tested by repeating the telescopic component slippage test at 105 percent of the maximum telescoping/retracting/unpinned holding capacity with the boom unpinned. However

if the only function of the telescoping capacity is to extend or retract boom sections, ancillary equipment, or rigging hardware, and no loads are telescoped, then the telescoping cylinder does not require a telescopic component slippage test.

5.4.2.3 Auxiliary and Whip Hoist. The test load shall be 105 percent of the maximum certified capacity for the hoist to be tested. Tests shall be performed with the boom fully extended or until 2 wraps of wire rope remain on a grooved hoist drum or 3 wraps of wire rope remain on a smooth hoist drum.

a. Raise the test load using the hoist.

b. Lower the test load and test the ability of the brake to control, stop, and hold the test load (10 minute hold).

c. Observe for any lowering that may occur, which may indicate a malfunction of boom or hoisting components, brakes, or outriggers. With the test load raised, rotate the hook 360 degrees clockwise and counter-clockwise to check bearing operation.

5.4.2.4 Maximum Line Pull Test and Ancillary Equipment Tests. For cranes that will use multiple reeving configurations or ancillary equipment (swing-away jibs, power pinned fly sections, manual extensions, jibs at variable offsets, multiple load blocks, etc.) during the certification period, using procedures per section 3, the following load tests are required:

a. Maximum Line Pull Test.

Note: Testing of all possible reeving configurations is not required. In some cases, this test may be combined with the maximum certified capacity test or load moment test.

1. The reeving configuration to be tested shall be such that the test load produces 105 percent of the maximum allowable wire rope line pull. If the crane cannot lift the test load due to the number of layers of wire rope on the drum, see the Note of paragraph 5.4.2.1.

2. Raise the test load using the hoist.

3. Lower the test load and test the ability of the brake to control, stop, and hold the test load (10 minute hold).

b. Ancillary Equipment Tests.

1. The test load shall be 105 percent of the maximum certified capacity of the equipment, or 105 percent of the maximum allowable wire rope line pull if the equipment is not fully reeved. For jibs with variable offset angles, test at the greatest offset used. For telescoping extensions, test at the fully extended length. Each point of a bifold

swingaway shall be tested. Record each test configuration and test load on the certification supplement form, figure 3-2.

Note:

For cranes with multiple counterweight configurations, testing of all possible counterweight combinations is not required. However, all counterweights that will be used during the certification period shall be tested in some combination during the annual load test.

5.4.2.4.1 Ancillary Equipment Used Without Procedures. As noted in section 3, paragraphs 3.5.3.1.1 and 3.5.3.1.2, ancillary equipment procedures are not required and the existing certification is not voided when removing and reinstalling outrigger pads, counterweights, outrigger extension pins, and boom angle and extension pins, provided all of the components are load tested at the annual certification. The OEM's instructions shall be followed when installing or removing these items.

5.4.2.5 "On-Rubber" (Free-Rated) Load Test. Allowable "on-rubber" rated capacity for over the side lifting for cranes equipped with outriggers shall not exceed 60 percent of the OEM's load chart values per paragraph 11.3. For those cranes, testing over the side "on-rubber" is not required. (For rubber tired cranes without outriggers, contact the Navy Crane Center). See section 11 for allowable "on-rubber" (free rated) capacities and other stability information for used and altered cranes. Check the stability and operation of crane, carrier, wheels, tires, brakes, etc., under load by performing the following tests, when lifting without outriggers and/or traveling with the load are permitted at the activity for the type of crane being tested.

Notes: Some cranes have different ratings for stationary lifts and for traveling with a load. Each allowable configuration shall be tested.

a. Maximum Certified On-Rubber Capacity.

1. Hoist 105 percent of the maximum certified on-rubber capacity at the minimum possible radius over the rear (or over the front as required by the OEM). Slowly boom down to the maximum radius for the maximum certified capacity. Observe for any lowering that may occur, which may indicate a malfunction of boom or hoisting components, brakes, or wheels/tires/axle components.

2. Rotate through the on-rubber working arc as allowed by the OEM. Observe for any lowering that may occur, which may indicate a malfunction of boom or hoisting components, brakes, or wheels/tires/axle components.

3. Travel a minimum of 50 feet with the test load over the rear (or front as required by the OEM) with the boom parallel to the longitudinal axis of the crane carrier. Observe for any lowering that may occur, which may indicate a malfunction of boom or hoisting components, brakes, or wheels/tires/axle components.

5.5 Lattice Boom Cranes.

5.5.1 No-Load Tests.

5.5.1.1 Hoist(s).

a. Raise and lower each hook through the maximum possible working distance of hook travel. After lowering the hook, ensure the wire rope is packed tightly on the drum prior to proceeding with the load tests to prevent wire rope displacement and crushing.

b. Raise each hoist block into the limit switch (where installed) at slow speed. Ensure the anti-two block alarm operates or the hoist is disabled in accordance with the OEM's operating instructions. If the crane is equipped with control lockouts (also known as function limiters or kickouts), carefully ensure all additional functions that could also two block the hoist are disabled (e.g., boom down) in accordance with the OEM's operating instructions.

c. Raise each hoist block beyond the limit switch by using the bypass switch (where installed).

5.5.1.2 Boom.

a. Raise and lower the boom through the full working range.

b. Raise the boom into the upper limit switch (where installed). Raise the boom past the boom upper limit switch using the bypass switch (where installed).

c. Raise the boom into the backup upper limit switch (where installed).

d. Test the lower limit switch (where installed) by the same procedure prescribed for testing the upper limit switch.

5.5.1.3 Other Functions. Other functions including swing shall be operated through a minimum of one full cycle/revolution of major components; e.g. one full revolution of track crawlers, 360 degrees of upper rotation.

a. Test the work area limit switch (area definition device), if applicable

5.5.2 Load Test. The load test consists of a maximum certified capacity test and a load moment test. In some cases, these tests may be combined. Additionally, a maximum line pull test is required for cranes that use multiple reeving configurations, and other appropriate tests are required for cranes that use ancillary equipment with ancillary equipment procedures during the certification period. The sequence may be varied by the activity, however the following test sequence is recommended. For cranes with multiple reeving configurations, the maximum line pull test (paragraph 5.5.2.4.a) should be performed first.

5.5.2.1 Maximum Certified Capacity Test.

a. The test load shall be 105 percent of the maximum certified capacity of the crane. Determine the maximum permissible radius for the maximum certified capacity. Perform the test at this radius.

b. Raise the test load using the hoist.

c. Lower the test load in power down mode (if the hoist does not have power down mode, use the foot brake to control, stop, and hold the load by latching the foot brake pedal) and test the ability of the brake to control, stop, and hold the test load 10 minutes without boom, or load hoist pawls engaged in the teeth (do not disable pawl system).

d. Observe for any lowering that may occur, which may indicate a malfunction of boom or hoisting components, brakes, or outriggers. With the test load raised, rotate the hook 360 degrees clockwise and counter-clockwise to check bearing operation. If the size of the test load precludes a full 360 degree rotation of the hook, perform the hook rotation test during the load moment test.

Note: Due to the number of layers of wire rope on the drum, some cranes may not be able to lift the test load per the OEM's load chart. If the crane cannot lift the test load, check the OEM's hoist line pull for the particular model hoist and layer of rope. If hoist line pull (available torque) is the limiting factor, reduce the test load based on the hoist line pull limitation and perform the required test. Certify the crane based on the reduced test load (i.e., certified capacity is test load divided by 1.05). If the crane cannot lift the reduced test load, verify that the system hydraulic pressure and relief valves, or clutch settings and tolerances, are set within OEM specifications. If the settings are within specification, contact the OEM.

e. Operate the boom from maximum radius to minimum radius for the load applied. Repeat the test, operating the boom from minimum radius to maximum radius for the load applied.

f. Free-Fall Operation Mode Test. If the OEM and activity permits operation of the crane in free-fall mode, test the ability of the brake to stop the load with the friction clutch disengaged. This test shall be performed in strict accordance with OEM and activity instructions and shall not exceed maximum recommended OEM allowances for loads.

5.5.2.2 Load Moment Test.

a. Test Configuration:

- Maximum radius - the radius that creates the maximum load moment that will safely clear the outriggers/stabilizers/carrier/crawler through the complete swing range

- The test load shall be 105 percent of OEM load chart capacity at this radius.

Note: For the purposes of this test, load moment is the product of capacity multiplied by radius.

b. Outrigger/Stabilizer Component Slippage. Raise the test load using the hoist. Swing the test load at slow speed through the complete swing range (at maximum radius as defined above) as allowed by the OEM and apply the brake periodically during rotation. The brake shall demonstrate its ability to stop the rotating motion in a smooth, positive manner. Hold the load over (or near as allowed by OEM) each outrigger/stabilizer for 5 minutes (holding over the center front outrigger/stabilizer is not required). Observe for any lowering that may occur, which may indicate a malfunction of boom or hoisting components, brakes or outriggers. Swing the crane in the opposite direction through the complete swing range as allowed by the OEM.

Notes for outrigger/stabilizer component slippage tests:

1. The significance of any lowering shall be evaluated by the activity engineering organization depending on operating requirements and safety.

2. For cranes equipped with outrigger locking devices but where activity operating procedures permit operation without the use of the locking devices, this test shall be performed with the locking devices disengaged.

c. Crawler Crane Rotation. Raise the test load using the hoist. Swing the test load at slow speed through the complete swing range (at maximum radius as defined above) as allowed by the OEM and apply the brake periodically during rotation. The brake shall demonstrate its ability to stop the rotating motion in a smooth, positive manner. Hold the load with the boom positioned over (or near as allowed by OEM) the corner of each crawler tread for 5 minutes (holding over the center front outrigger/stabilizer, if equipped, is not required). Observe for any lowering that may occur, which may indicate a malfunction of boom or hoisting components, brakes, outriggers, or crawler treads. Swing the crane in the opposite direction through the complete swing range as allowed by the OEM.

d. Boom Operation. Operate the boom from maximum radius to minimum radius for the load applied. Repeat the test, operating the boom from minimum radius to maximum radius for the load applied.

5.5.2.3 Auxiliary and Whip Hoist. The test load shall be 105 percent of the maximum certified capacity for the hoist to be tested.

a Raise the test load using the hoist.

b Lower the test load and test the ability of the brake to control, stop, and hold the test load (10 minute hold).

c. Observe for any lowering that may occur, which may indicate a malfunction of boom or hoisting components, brakes, or outriggers. With the test load raised, rotate the hook 360 degrees clockwise and counter-clockwise to check bearing operation.

5.5.2.4 Maximum Line Pull Test and Ancillary Equipment Tests. For cranes that will use multiple reeving configurations or ancillary equipment (fixed jibs, luffing jibs, jib inserts, multiple load blocks, etc.) using procedures per section 3, the following load tests are required:

a Maximum Line Pull Test.

Note. Testing of all possible reeving configurations is not required. In some cases, this test may be combined with the maximum certified capacity test or load moment test.

1. The reeving configuration to be tested shall be such that the test load produces 105 percent of the maximum allowable wire rope line pull. If the crane cannot lift the test load due to the number of layers of wire rope on the drum, see the Note of paragraph 5.5.2.1.

2. Raise the test load using the hoist.

3. Lower the test load and test the ability of the brake to control, stop, and hold the test load (10 minute hold).

b. Ancillary Equipment Tests.

1. The test load shall be 105 percent of the maximum certified capacity of the equipment, or 105 percent of the maximum allowable wire rope line pull if the equipment is not fully reeved. For jibs with variable offset angles and lengths, test at the greatest offset and length used. Record each test configuration and test load on the certification supplement form, figure 3-2.

Notes:

1. For cranes with multiple boom sections, testing of all possible boom insert combinations is not required. However, all sections that will be used during the certification period shall be tested. Repeat the maximum certified capacity test of paragraph 5.5.2.1 at the maximum boom length anticipated for use during the certification period using 105 percent of the maximum capacity for that boom length.

2. For cranes with multiple counterweight configurations, testing of all possible counterweight combinations is not required. However, all counterweights that will be used during the certification period shall be tested in some combination during the annual load test.

5.5.2.4.1 Ancillary Equipment Used Without Procedures. As noted in section 3, paragraphs 3.5.3.1.1 and 3.5.3.1.2, ancillary equipment procedures are not required and the existing certification is not voided when removing and reinstalling outrigger pads, counterweights, outrigger extension pins, and boom angle and extension pins, provided all of the components are load tested at the annual certification. The OEM's instructions shall be followed when installing or removing these items.

5.5.2.5 "On-Rubber" (Free-Rated) Load Test. Allowable "on-rubber" rated capacity for over the side lifting for cranes equipped with outriggers shall not exceed 60 percent of the OEM's load chart values per paragraph 11.3. For those cranes, testing over the side is not required. See section 11 for allowable "on-rubber" (free rated) capacities and other stability information for used and altered cranes. Check the stability and operation of crane, carrier, wheels, tires, brakes, etc., under load by performing the following tests, when lifting without outriggers and/or traveling with the load are permitted at the activity for the type of crane being tested.

Note: Some cranes have different ratings for stationary lifts and for traveling with a load. Each allowable configuration shall be tested.

a. Maximum Certified On-Rubber Capacity.

1. Hoist 105 percent of the maximum certified on-rubber capacity at the minimum possible radius over the rear (or over the front as required by the OEM). Slowly boom down to the maximum radius for the maximum certified capacity. Engage the boom and load hoist pawls, where applicable. Observe for any lowering that may occur, which may indicate a malfunction of boom or hoisting components, brakes, or wheels/tires/axle components.

2. Rotate through the on-rubber working arc as allowed by the OEM. Observe for any lowering that may occur, which may indicate a malfunction of boom or hoisting components, brakes, or wheels/tires/axle components.

3. Travel a minimum of 50 feet with the test load over the rear (or front as required by the OEM) with the boom parallel to the longitudinal axis of the crane carrier. Observe for any lowering that may occur, which may indicate a malfunction of boom or hoisting components, brakes, or wheels/tires/axle components.

5.5.2.6 Crawler Travel Test. Check the stability and operation of carrier, brakes, crawlers, etc., under load by performing the following tests, when traveling with the load is permitted for a crawler crane.

Notes: Some cranes have different ratings for stationary lifts and for traveling with a load.

a. Maximum Certified Travel Capacity.

1. Hoist 105 percent of the maximum certified travel capacity at the minimum possible radius over the rear (or over the front as required by the OEM). Slowly boom down to the maximum radius for the maximum certified travel capacity. Engage the boom and load hoist pawls, where applicable. Observe for any lowering that may occur, which may indicate a malfunction of boom or hoisting components, brakes, or crawler components.

2. Travel a minimum of 50 feet with test load over the rear (or front as required by the OEM) with the boom parallel to the longitudinal axis of the crane carrier. Observe for any lowering that may occur, which may indicate a malfunction of boom or hoisting components, brakes, or crawler components.

5.6 Test After Change or Repair of Tires. For cranes with "on rubber" lift capability, in lieu of a load test the following test may be performed after change or repair of tires. The crane shall be traveled (with no load on hook) a minimum of 100 feet, forward and reverse, with the counterweight positioned over the corner of the crane with the affected tire (if allowed by the OEM) and with the boom at minimum radius or as required by the OEM. This test may also be used for repairs on load bearing axle/suspension components on mobile cranes equipped with counterweights provided the OEM allows the counterweight to be positioned over the area of the crane with the affected repair.

5.7 Wire Rope Test for New Rope. The maximum working length of new wire rope shall be tested before being put in service on any hoist. For the main hoist, this shall be accomplished by performing the maximum certified capacity test of paragraphs 5.4.2.1 or 5.5.2.1 as appropriate and the load moment test of paragraphs 5.4.2.2 or 5.5.2.2 as appropriate, unless the line pull during the load moment test is equal to or greater than the line pull during the maximum certified capacity test in which case the maximum certified capacity test is not required. For the auxiliary and whip hoists, this test shall be accomplished by performing the test of paragraph 5.4.2.3 or 5.5.2.3 as appropriate.

5.8 Articulating Boom Crane. Follow the requirements of paragraphs 5.1, 5.3, and 5.3.1, and perform a no-load test in accordance with paragraph 5.4.1 as applicable. Definitions and nomenclature are extracted from ASME B30.22, Articulating Boom Cranes.

5.8.1 Maximum Test Load for the Outer Hook or Padeye.

CAUTION: Lift the test load only high enough to perform the required tests. Use of long slings or chain falls to maintain a safe load height is recommended.

a. Static Test. Raise the test load to clear the ground with boom sections at either the minimum allowable articulating angle (typically inner boom and secondary boom in a straight line for a 0 degrees articulation angle) or at the maximum allowable articulating angle (knuckled in) for the size of the load, and at the minimum possible radius for the load and hold for ten minutes. Rotate load and hook 360 degrees clockwise and counter-clockwise to check bearing operation, if applicable. Observe for any lowering that may occur, which may indicate a

malfunction of boom or hoisting components, brakes, or outriggers/stabilizers. Tests 5.8.1.a through c shall be performed with any manual or hydraulic telescoping boom sections fully retracted.

Note: The length of the test slings and safety of the lift will govern the actual minimum test radius. Use extreme caution when lifting load for cranes that have no winch (wire rope hoist) to maintain load within radius. See note under 5.4.2.1 for winch, if applicable.

b. Dynamic Test. Raise and lower the test load at normal operating speeds using the winch if so equipped. Test the ability of the winch brake and controls to control and stop the load. If the crane is not equipped with a winch skip this step.

c. Boom Operation. Using the inner and secondary boom lift cylinders, operate the boom from minimum radius to maximum radius for the load applied. Repeat the test in the opposite direction.

d. Hydraulic Component Slippage For Cranes Equipped With Hydraulic Extension (Telescoping) Cylinders. Lift the test load inside the maximum radius and allow time for fluid and component temperatures to stabilize. Hold the load for ten minutes without use of controls by the operator. There shall be no significant lowering of the load, boom, or outrigger/stabilizer beams due to components or systems malfunction or failure during the test.

Notes for hydraulic component slippage test:

1. Test at the maximum hydraulically extended boom length, minimum allowable articulating angle, and minimum radius corresponding to that boom length and articulating angle (long slings or portable manual hoists may be required to keep the load as close to the ground as possible).

2. In addition, for cranes with load chart configurations that allow lifts with the secondary boom (and/or other boom sections) articulated below horizontal (knuckled in), perform the test with all extension (telescoping) cylinders fully retracted, at the maximum articulating angle (knuckled in), and at the minimum radius for that configuration if not previously performed in paragraph 5.8.1.a.

3. For cranes without lockable outriggers/stabilizers, or for cranes with lockable outriggers/stabilizers where the activity allows operation without the use of the locking devices, one of the above tests shall be performed on the opposite side of the crane (and over the front for cranes with front outriggers).

4. For cranes equipped with the same hydraulic holding valve for both directions on the hydraulic extension (telescoping) cylinder(s), the test in paragraph 5.8.1.d note 2 is not required.

5. For cranes without hydraulic telescoping cylinders, the test in paragraph 5.8.1.a may serve as the hydraulic component slippage test for one side and the stability test in paragraph 5.8.2.c will serve as the hydraulic component slippage test for the opposite side.

6. The significance of any lowering shall be evaluated by the activity engineering organization depending on operating requirements and safety.

5.8.2 Stability Test. The test load shall be established based on the maximum hydraulically extended boom length (for cranes equipped with hydraulic extension cylinders), minimum articulation angles, and maximum allowable radius as determined by the posted load chart (typically "straight out"). See exception below.

a. Boom Operation. Raise and lower the boom using the inner boom lift cylinder through a safe working range based on the length of the slings for the length of boom extended and radius as determined below. Visually observe for smooth operation.

b. Rotation. At slow speed, rotate left and right the maximum degrees allowed by the OEM at the radius as determined below with boom and load hoist pawls (dogs) engaged where applicable. The crane shall demonstrate its ability to stop the rotating motion in a smooth, positive manner.

c. Hydraulic Component Slippage For Cranes Equipped Without Hydraulic Extension (Telescoping) Cylinders. Lift the test load inside the maximum radius and allow time for fluid and component temperatures to stabilize. Hold the load for ten minutes without use of controls by the operator. There shall be no significant lowering of the load, boom, or outrigger/stabilizer beams due to components or systems malfunction or failure during the test.

Notes for hydraulic component slippage test:

1. For cranes without lockable outriggers/stabilizers, or for cranes with lockable outriggers/stabilizers where the activity allows operation without the use of the locking devices, one of the above tests shall be performed on the opposite side of the crane (and over the front for cranes with front outriggers).

2. The significance of any lowering shall be evaluated by the activity engineering organization depending on operating requirements and safety.

Notes for stability test:

1. These tests shall be performed over the side of the crane. Stability testing can be extremely hazardous, particularly with long booms. To minimize the hazard, perform the test in the following configurations:

2. If no ratings are governed by stability, perform the above tests with the boom at the maximum hydraulically extended boom length (for cranes equipped with hydraulic extension cylinders), minimum articulation angles, and maximum allowable radius as determined by the posted load chart (typically "straight out"). If some load chart ratings are governed by stability, perform the test with the boom positioned at the first boom length

governed by stability, minimum articulation angle, and maximum allowable radius and load for that boom length.

3. When lifting test loads, always lift the load well within the maximum radius and slowly boom down to the pre-measured radius (as determined above) stopping at least once to test the effectiveness of the boom hydraulic system to control the load. Lift the test load only high enough to perform the required tests.

4. A crane outrigger/stabilizer may become light (start to rise up within the outrigger/stabilizer pad) and the outrigger/stabilizer pad may clear the ground during this procedure (with the boom positioned over the opposite corner) depending on the make and model. Generally, this is normal and not an indication of tipping. However, the activity shall verify with the crane OEM that a crane exhibiting this condition is safe for use.

5.8.3 Maximum Test Load for the Inner Hook or Padeye. If crane is equipped with an inner hook or padeye, that is utilized by the activity, perform the test required by paragraph 5.8.1.a and c, on the inner hook or padeye.

5.8.4 Ancillary Equipment. When authorized, ancillary equipment (manual extensions, etc.) shall be load tested. Test load shall be based on the maximum rated load for the equipment, or as limited by wire rope line pull if the equipment is not fully reeved. Record each test configuration and test load on the certification supplement form, figure 3-2.

5.8.4.1 Ancillary Equipment Used Without Procedures. As described by section 3, paragraphs 3.5.3.1.1 and 3.5.3.1.2, procedures are not required and the existing certification is not voided when removing and reinstalling outrigger pads, counterweights, outrigger extension pins, boom angle and extension pins, etc., provided all of the components are load tested and certified at the annual certification.

5.9 Weight Handling Equipment Used for Other than Lift Crane Service. Locomotive, crawler, truck, and cruiser cranes that are used for clamshell, dragline, magnet, pile driving, or other non-lift crane work shall be tested at the maximum safe working load permitted for the size wire rope being used. This test shall be performed in all working motions except travel. Buckets, magnets, etc., may be removed for testing wire rope. No test is required after reassembly. Retesting is not required when end attachment is changed from original connection (i.e., changed from clamshell use to dragline and so on) during the certification period.

6 Bridge/Overhead Traveling, Wall, Gantry, Cantilever Gantry and Semi-gantry.

6.1 No-Load Test.

6.1.1 Hoist.

a. Raise each load hook slowly into the hoist limit switch.

b. Check for proper operation of the backup limit switch (where applicable).

c. Lower and raise each hook through controller range.

d. Check for proper operation of lower limit switch (where applicable).

6.1.1.1 Emergency Brake on Wire Rope Drum (Shaft Failure Detection System). Simulate a system fault by disconnecting the motor encoder signal while lowering at slow speed. Verify that the brake applies within the designed delay and that the hoist control is disabled in each direction. Reconnect the encoder after the test. Repeat this test with the drum encoder. If the system uses components other than encoders (e.g., resolvers, mechanical overspeeds) to provide detection, the activity engineering organization shall develop the method for simulating the fault (e.g., forcing variables).

6.1.2 Trolley. Operate the trolley through the controller range in both directions. Operate the full distance of the bridge rails and slowly contact the trolley rail stops with the bumpers. Verify proper brake operations.

6.1.3 Bridge. Operate the bridge through the controller range in both directions. Operate the full distance of the runway and slowly contact the runway rail stops with the crane bridge bumpers. Verify proper brake operation.

6.2 Load Test. Test each load hook separately.

6.2.1 Hoist.

a. Static Test. Raise test load approximately one foot and hold for 10 minutes. Rotate load and hook 360 degrees clockwise and counter-clockwise to check bearing operation. Observe for lowering of the load, which may indicate malfunction of hoisting components or brakes. For hoists with primary and secondary holding brakes, perform the tests in paragraph 6.2.1.b in lieu of this test.

b. Primary and Secondary Holding Brakes. For hoists with primary and secondary holding brakes (i.e., where each brake is designed to individually hold the load) raise the test load and observe the proper timing sequence in the application of the primary and secondary brake when the controller is returned to neutral. Visually observe both hoist holding brakes to ensure correct operation.

(1) Raise the test load approximately one foot and inactivate the secondary holding brake while testing the primary holding brake. Hold for 10 minutes. Rotate load and hook to check bearing operation. Observe for lowering of the load, which may indicate malfunction of hoisting components or brakes.

(2) Re-engage secondary holding brake and release the primary holding brake. Hold for 10 minutes. Observe for lowering of the load, which may indicate malfunction of hoisting components or brakes. Re-engage the

primary holding brake. Recheck proper operation of time delay and ensure smooth positive stopping.

(3) If the brakes are designed to individually hold only the rated capacity (and not 125 percent), then the tests in subparagraphs (1) and (2) may be performed with a test load of 100 (+5/-0) percent of rated capacity, and the certification shall be so noted. However, the brakes, acting together, shall demonstrate the ability to hold a 125 percent test load for a 10-minute period.

c. Dynamic Test, Including Dynamic Load Brake. Raise and lower test load and visually observe smooth control and acceleration between points. Stop the load during hoisting and lowering to verify the brake stops and holds the load.

Note: Dynamic load brakes include eddy current brakes, DC regenerative braking, regenerative braking from squirrel cage motors, etc. Dynamic braking will not stop motion.

d. Mechanical Load Brake. Raise test load no more than five feet. With the hoist controller in the neutral position, release the holding brake (see notes). The load brake shall hold the test load. Raise test load the minimum amount to perform the following test. Again, with the holding brake in the released position, start the test load down slowly and return the controller to the neutral position as the test load lowers. The load brake shall stop the test load. If the load brake does not stop the test load, but prevents the test load from accelerating, activities shall contact the OEM or activity engineering organization to ensure that the load brake is operating as designed. This characteristic and OEM or activity engineering organization correspondence shall be documented in the equipment history file.

Note 1: Methods of releasing the holding brake will vary from crane to crane depending upon the design of the brake and hoist. The two general methods of releasing the brake are mechanical and electrical. There are rare examples of holding brakes that may be defeated pneumatically or hydraulically. The following are various examples of releasing a brake that may apply to a particular crane:

a. Using a pry-bar between the pressure plate and housing of a disc brake to release the disc brake.

b. Mechanically forcing a brake solenoid plunger into the released position.

c. Installing a clamp to clamp a disc brake open.

d. Inserting a block into a brake linkage to prevent the brake from applying.

e. Using the brake release levers/handles if the brake is so equipped.

f. Adjusting the brake setting such that no torque is produced by the brake. This method will require a static and dynamic retest of the brake when it is adjusted back to the correct setting after the load brake test.

g. Installing a switched jumper that electrically releases and sets the brake. The switch shall set the brake in the event of a mechanical load brake failure. Temporarily installing the switched jumper is not a crane alteration. Permanent installation of a switched jumper is a crane alteration requiring Navy Crane Center approval.

The activity shall describe in writing how the holding brake will be defeated to test the mechanical load brake (or why the brake cannot be defeated). This description may be in the form of a detailed or standard procedure, or may be annotated on the remarks portion of the crane condition inspection record.

CAUTION**:** Depending on the design of the brake, some of the mechanical methods will require work to be performed in the vicinity of energized electrical circuits. Mechanics and electricians who perform work in energized areas shall be trained by the activity and all work shall meet applicable OSHA requirements. Methods “c,” “e,” and “g” do not necessarily require work in energized areas.

Note 2: For hoists where the holding brake cannot be mechanically or electrically released (such as brakes that are integral to the motor’s rotor which energizes the armature when released or only release by centrifugal force), observe for smooth lowering motion and unusual noise or overheating during lowering.

e. Loss of Power (Panic Test). This test is designed to test the reaction of a hoisting unit in the event of power failure during a lift. Hoist the test load to a convenient distance above the surface. Lower test load at slow speed and with the controller in the slow lowering position, disconnect the main power source and return the controller to the neutral position. The test load shall stop lowering when the controller is placed in the neutral position.

CAUTION: The activity engineering organization shall review the system circuitry for cranes with electronic controls to assure that this test can be performed safely without damaging the control system. For cranes where the controls may be damaged, the activity engineering organization shall document their justification and fully describe the alternate tests performed. Alternate test procedures require Navy Crane Center approval.

6.2.1.1 Emergency Brake on Wire Rope Drum (Shaft Failure Detection System).

a. Static Test. Test the ability of the hoist caliper disc brake to hold the test load after testing the other holding brake(s). Raise the test load approximately one foot off the ground. Depress the emergency stop pushbutton to disconnect the main power source and set the brakes. Manually release all brakes except the caliper disc brake. Hold the load for 10 minutes with the caliper disc brake. Observe for lowering of the load, which may indicate a malfunction of the hoisting components or the brake.

Reset the other holding brake(s) to the applied condition. Energize the main power source. Verify that the load is held by the holding brake(s). Operate the hoist in each direction and verify proper operation of all controls and brakes.

b. Dynamic Test. Perform with a test load of 100 (+5/-0) percent of rated capacity. Raise the load to a sufficient height to perform the following test. Lower the load at the minimum speed necessary to simulate a shaft failure. Disable all hoist brakes except the wire rope drum brake and simulate a system fault by interrupting (e.g., test switch) the motor or drum encoder. If the system uses components other than encoders (e.g., resolvers, mechanical overspeeds) to provide detection, the activity engineering organization shall develop the method for simulating the fault (e.g., forcing variables). The brake shall stop the load. Reset all brakes. (CAUTION: Station appropriately trained personnel at each disabled hoist brake in case of failure of the drum brake to stop the load. These personnel shall be in constant contact with the load test director and prepared to safely engage the hoist brakes when directed.)

6.2.2 Trolley Motion. Operate the trolley with the test load (if space is available) the full distance of the bridge rails using extreme caution. Verify proper brake operation.

6.2.3 Bridge Motion. With the trolley at one end of the bridge, operate the bridge, with test load, the full distance of the runway (if space is available) using extreme caution. With the trolley at the opposite end of the bridge, operate the bridge in the opposite direction using extreme caution. Observe for any binding of the bridge trucks, and verify proper brake operation.

Note: If the crane is equipped with multiple trolleys (or multiple hoists) which are used to achieve the rated load of the crane (e.g., two 10,000 pound trolleys which together allow for a 20,000 pound maximum capacity) then the tests in 6.2.2 and 6.2.3 shall be performed with the multiple trolleys (or hoists) loaded simultaneously.

6.3 Stopping Under Loss of Power (For Cranes without Bridge or Trolley Automatic Brakes). A safety hazard exists in controlling the motion of the bridge and trolley, and therefore the motion of the load, for certain cranes in the event of a power failure. The seriousness of the hazard varies with the speed of bridge or trolley; the size and weight of the load; the surrounding environment; and the operating characteristics of the individual cranes. The major factor in reducing this hazard is the skill and response of the operator because it is not considered either feasible or practical to modify all the existing cranes that are not provided with automatic braking in all travel modes. These requirements do not apply if the bridge crane is exclusively cab operated and has an operator applied brake (e.g., hydraulic foot brake, mechanical foot brake, etc.), or if the crane utilizes self-locking worm gear drives for the bridge or trolley. Accordingly, the following actions shall be taken:

6.3.1 The operating characteristics of the crane under a loss of power shall be determined by operational field testing (with the test load) and recorded. This shall be a one time test unless repairs, or alterations are made that will change the operating characteristics of the crane under the loss of power.

6.3.2 The certifying official shall make a determination that the operating characteristics are within acceptable limits of safety for operations under loss of power.

6.3.3 Instructions, as appropriate, shall be posted in the crane cab and/or on the pendant controller to warn the operator of the characteristics of the crane and the necessary precautions in the event of loss of power.

6.4. Gantry Frame Extension Pins. As described by section 3, paragraph 3.5.3.1.3, procedures are not required and the existing certification is not voided when removing and reinstalling pins used to raise and lower gantry cranes, provided the pins are load tested and certified with the crane at the highest elevation for which use is anticipated.

7 Jib, Pillar, Pillar Jib, Monorail, Davit, and Fixed Overhead Hoist.

7.1 No-Load Test. Test each operation separately.

7.1.1 Hoist.

a. Raise each load hook slowly into the hoist limit switch.

b. Check for proper operation of the backup limit switch (where applicable).

c. Lower and raise each hook through the controller range.

d. Check for proper operation of lower limit switch (where applicable).

7.1.2 Trolley. Operate the trolley through the controller range in both directions. Operate the full length of the monorail or jib and slowly contact the stops. Verify proper brake operations. Operate all rail switches and verify proper operation.

7.1.3 Swing. (Jib, Pillar, and Pillar Jib) Swing through working range (where space is available) at maximum radius.

7.2 Load Test.

7.2.1 Hoist.

a. Static Test. Raise load approximately one foot and hold for 10 minutes. Rotate load and hook 360 degrees clockwise and counter-clockwise to check bearing operation. Observe for lowering of the load, which may indicate malfunction of hoisting component or brake.

b. Dynamic Test, Including Dynamic Load Brake. Raise and lower test load and visually observe smooth control and acceleration between points. Stop the load during hoisting and lowering to verify the brake stops and holds the load.

Note: Dynamic load brakes include eddy current brakes, DC regenerative braking, regenerative braking from squirrel cage motors, etc. Dynamic braking will not stop motion.

c. Mechanical Load Brake. Raise test load no more than five feet. With the hoist controller in the neutral position, release the holding brake (see notes). The load brake shall hold the test load. Raise test load the minimum amount to perform the following test. Again, with the holding brake in the released position, start the test load down slowly and return the controller to the neutral position as the test load lowers. The load brake shall stop the test load. If the load brake does not stop the test load, but prevents the test load from accelerating, activities shall contact the OEM or activity engineering organization to ensure that the load brake is operating as designed. This characteristic and OEM or activity engineering organization correspondence shall be documented in the equipment history file.

Note 1: Methods of releasing the holding brake will vary from crane to crane depending upon the design of the brake and hoist. The two general methods of releasing the brake are mechanical and electrical. There are rare examples of holding brakes that may be defeated pneumatically or hydraulically. The following are various examples of releasing a brake that may apply to a particular crane:

a. Using a pry-bar between the pressure plate and housing of a disc brake to release the disc brake.

b. Mechanically forcing a brake solenoid plunger into the released position.

c. Installing a clamp to clamp a disc brake open.

d. Inserting a block into a brake linkage to prevent the brake from applying

e. Using the brake release levers/handles if the brake is so equipped.

f. Adjusting the brake setting such that no torque is produced by the brake. This method will require a static and dynamic retest of the brake when it is adjusted back to the correct setting after the load brake test.

g. Installing a switched jumper that electrically releases and sets the brake. The switch shall set the brake in the event of a mechanical load brake failure. Temporarily installing the switched jumper is not a crane alteration. Permanent installation of a switched jumper is a crane alteration requiring Navy Crane Center approval.

The activity shall describe in writing how the holding brake will be defeated to test the mechanical load brake (or why the brake cannot be defeated). This description may be in the form of a detailed or standard procedure, or may be annotated on the Remarks portion of the crane condition inspection record.

CAUTION**:** Depending on the design of the brake, some of the mechanical methods will require work to be performed in the vicinity of energized electrical circuits. Mechanics and electricians who perform work in energized areas shall be trained by the activity and all work shall meet applicable OSHA requirements. Methods “c,” “e,” and “g” do not necessarily require work in energized areas.

Note 2: For hoist where the holding brake cannot be mechanically or electrically released (such as brakes that are integral to the motor’s rotor which energizes the armature when released or only release by centrifugal force), observe for smooth lowering motion and unusual noise or overheating during lowering.

d. Loss of Power (Panic Test). Hoist the test load to a convenient distance above the surface and, while slowly lowering test load, cut main power to hoist and return the controller to the neutral position. Load shall stop. The significance of the stopping distance for air hoists shall be evaluated and published by the certifying official depending on operating requirements and safety.

CAUTION: The activity engineering organization shall review the system circuitry for cranes with electronic controls to assure that this test can be performed safely without damaging the control system. For cranes where the controls may be damaged, the activity engineering organization shall document their justification and fully describe the alternate tests performed. Alternate test procedures require Navy Crane Center approval.

7.2.2 Trolley. Operate the trolley, with test load, through the full distance of the monorail or jib (where the space is available). Observe for any malfunctioning of the trolley assembly and alignment of monorail or jib. Verify proper brake operation.

7.2.3 Swing (Where Applicable). Swing the test load (where space is available) through the working range at maximum radius, stopping the load at several points. There shall be no excessive drift of jib or trolley at any of these points. If a horizontal force of 15 pounds or less will restrain the load, then the drift is acceptable.

7.4 Boom Angle and Extension Pins. As described by section 3, paragraph 3.5.3.1.2, procedures are not required and the existing certification is not voided when removing and reinstalling boom angle and extension pins on category 3 pedestal mounted commercial boom assemblies, provided the pins are load tested and certified with the crane.

8 Mobile Boat Hoists Including Self Propelled and Towed Types, and Rubber-Tired Gantry Cranes.

8.1 Test Load. The nominal test load shall be 105 percent of the OEM capacity unless the OEM does not allow testing over 100 percent of the OEM capacity. Depending upon the design of the mobile boat hoist, the test load may include the weight of (or deduction values for) the spreader and sling assemblies below the lower block. Follow OEM or activity engineering instructions for weight deduction values.

8.2 No-Load Test.

8.2.1 Hoist.

a. Raise and lower each block through the maximum working range of hook travel.

CAUTION: After lowering blocks, ensure wire rope is packed tightly, and there is a minimum of two wraps on grooved drums (three wraps on smooth drums) prior to proceeding with load tests.

b. Run each hoist block into the upper limit switch (where installed) at slow speed.

8.2.2 Travel Test. Travel a minimum of 50 feet (if applicable) steering left and right testing for proper steering operation. Verify steering alignment is in accordance with OEM instructions. Test travel alarms and emergency stop switches (where installed). For towed type mobile boat hoists, tow the boatlift a minimum of 50 feet.

8.3 Load Test.

8.3.1 Hoist.

CAUTION: On certain types of mobile boat hoists that use deck fittings for lifting test loads, ensure that the rotation alignments of the deck fittings are aligned in the plane of the sling. Lift the test load only high enough to perform the required tests.

a. Static Test. Raise the test load approximately one foot and hold for 10 minutes. Observe for any lowering that may occur, which may indicate a malfunction of the hoisting components, or hoist brakes.

Notes for paragraph 8.3.1.a:

1. On certain types of mobile boat hoists, the hoist drums use one continuous length of wire rope between two hoists. The wire rope shall be equalized (equal amounts of wire rope on each drum) before a lift is made. Follow OEM procedures for equalizing hoist drums.

2. For certain types of mobile boat hoists the engine shall be at full speed when lifting the test load. Follow the OEM instructions if available.

3. For mobile boat hoists with individual hoists connected to each corner of the test load, ensure that the test load is raised evenly.

4. For mobile boat hoists that have individual load hooks on a single load beam (spreader), the load beam shall be marked with its maximum capacity. If the rated capacity of the load beam is based on the capacity of all hooks, the hooks shall be tested together at the test load percentage shown in paragraph 8.1.

b. Hoist Dynamic Test. Raise and lower the test load at normal operating speeds and visually observe smooth control.

c. Hoist Brake. Test the ability of the hoist brake to control and stop the load while slowly raising and lowering the test load.

8.3.2 Travel Test. For self-propelled mobile boat hoists, travel the mobile boat hoist at slow speed a minimum of 50 feet forward and reverse. At slow speed apply the travel foot brake. While traveling, steer right and left. For towed type mobile boat hoists, tow the mobile boat hoist a minimum of 50 feet.

CAUTION: Attach taglines to the load to control oscillation. Test personnel shall stand clear of tires during load test.

APPENDIX F - EXAMPLES OF LOAD BEARING PARTS, LOAD CONTROLLING PARTS, AND OPERATIONAL SAFETY DEVICES

EXAMPLES OF LOAD BEARING PARTS

HOOK
HOOK NUT
HOOK BEARING
LOAD BLOCK
SHEAVES
SHEAVE PINS
BOOM HEEL PINS
BOOM PIN HOUSINGS
BOOM PIN HOUSING CONNECTIONS
WIRE ROPE
WIRE ROPE FITTINGS
WIRE ROPE DRUMS
DRUM SHAFTS
DRUM SHAFT BEARING HOUSINGS
DRUM SHAFT HOUSING NUTS AND BOLTS
HOIST DRUM BULL GEAR
HOIST DRUM PINION GEAR
GEAR TO SHAFT CONNECTION
GEAR TO DRUM CONNECTION
PINION SHAFT
PINION SHAFT BEARING HOUSINGS
PINION SHAFT BEARING HOUSING BOLTS AND NUTS
AUTOMATIC HOIST BRAKES
PINION SHAFT TO HOIST GEARBOX COUPLING
OUTPUT SHAFT OF HOIST GEARBOX
HOIST GEARBOX GEARS
HOIST GEARBOX GEAR SHAFTS
HOIST GEARBOX INPUT SHAFT
GEARBOX INPUT SHAFT TO MOTOR COUPLING
HOIST AUTOMATIC BRAKE BRAKEWHEELS
AS A COMPONENT, ENTIRE HOIST REDUCER
HOIST MOTOR SHAFT
ALL HOIST DRIVE TRAIN COMPONENTS
FOUNDATIONS FOR HOIST COMPONENTS
FOUNDATION BOLTS AND NUTS
TROLLEY WHEELS AND AXLES
TROLLEY FRAME MAIN MEMBERS
BRIDGE BEAM AND END CONNECTIONS
HOOK TRUNNION
EQUALIZER BARS AND PINS
SHEAVE BEARINGS
DRUM AND PINION SHAFT BEARINGS
HOIST REDUCER BEARINGS AND BEARING RETAINERS
HOIST REDUCER MECHANICAL LOAD BRAKES
HOIST DRIVE KEYS
LOAD RESTRAINING SHEAR BLOCKS
LOWER ROLLER PATH
ROLLER SPIDERS
TRUCK SYSTEM SADDLES
LUFFING HOIST PAWL, RATCHET, AND FOUNDATION
UPPER ROLLER PATH
ROLLER PATH ROLLERS/WHEELS
LOAD CARRYING AXLES OF ROLLERS
ROLLER PATH SUPPORTING MEMBERS (UPPER AND LOWER)
GUDGEON AND EQUALIZER PINS
TRUCK AXLES
TRUCK WHEELS
ALL MEMBERS OF TUBULAR BOOMS
MAIN CHORD MEMBERS OF STRUCTURAL SHAPE BOOMS
SHEAVE NEST MEMBERS
LUFFING BRIDLE
LUFFING BRIDLE TO BOOM CONNECTIONS
"A" FRAME LEGS AND CONNECTIONS
GANTRY LEG MAIN MEMBERS
EQUALIZER FRAME MAIN MEMBERS
TRUCK FRAME MAIN MEMBERS
INSULATED LINK

EXAMPLES OF LOAD CONTROLLING PARTS

FOOT CONTROLLED BRAKES
MASTER CYLINDERS FOR BRAKES
SLAVE CYLINDERS FOR BRAKES
ROTATE BULL GEAR
ROTATE PINION GEAR
ROTATE PINION GEAR SHAFT
OUTPUT SHAFT OF ROTATE GEARBOX
COUPLING OF OUTPUT SHAFT TO PINION SHAFT
GEARS OF ROTATE GEARBOX
GEAR SHAFTS OF ROTATE GEARBOXES
COUPLING OF INPUT SHAFT TO MOTOR SHAFT
ROTATE ELECTRIC BRAKES
TRAVEL ELECTRIC BRAKES
TRAVEL GEAR SHAFTS
TRAVEL GEAR SHAFT TO MOTOR COUPLING
TRAVEL GEARS
MOTOR SHAFT
BEARING HOUSINGS FOR TRAVEL AND ROTATE
TRAVEL AND ROTATE DRIVE KEYS
TRAVEL GEAR GEARBOX COMPONENTS
CRANE MOUNTED DIESEL ENGINES AND GENERATORS (with the exception of those items listed in paragraph 3.4.3.c(2)
CRANE MOUNTED ELECTRICAL POWER DISTRIBUTION (all conductors on a crane that carry current to the motors including collector shoes and wheels, and shore power, but not hotel power conductors)
ELECTRICAL CONTROL CIRCUITS

Note: Electrical circuit designs are too numerous to list.

The only electrical circuit components that are to be considered as load controlling are those associated with movement of the load.

EXAMPLES OF OPERATIONAL SAFETY DEVICES

INTERLOCKS INCLUDING "DEADMAN" TYPE DEVICES
UPPER HOIST LIMIT SWITCH
ANTI-TWO-BLOCK WARNING LIMIT SWITCH
LOWER HOIST LIMIT SWITCH
LUFFING HOIST LIMIT SWITCH (EXCLUDING HORIZONTAL LIMIT SWITCHES ON CRANES THAT DO NOT SUPPORT LOADS WITH BOOMS HORIZONTAL)
ROTATE LIMIT SWITCH (EXCLUDING SPUD LOCK LIMIT SWITCHES)
EMERGENCY STOP SWITCHES
LOCKING DEVICES
OVERLOAD INDICATORS WITH SHUTDOWN CAPABILITY
RADIUS INDICATOR
OVERSPEED, PRESSURE, AND TEMPERATURE DEVICES ON CRANE MOUNTED DIESEL ENGINES (I.E., PROVIDING POWER TO MOVE THE LOAD) WITH SHUTDOWN CAPABILITY

Note: Operational safety devices do not include switches, gauges, bells, alarms, fuses, etc., on engines, air compressors, circuits, etc., that protect personnel or equipment, but are not activated by the hook load or position.

APPENDIX G - BASIC QUESTIONS FOR CATEGORY 1 AND 4 CRANE OPERATORS WRITTEN TEST
(Q = Question/A = Answer)

Notes:

1 Activities shall supplement this list with questions pertinent to the specific types of crane(s) at the activity as well as the activity's unique mission and safety requirements. Elimination of non-pertinent questions and modification to suit activity applicability is permitted.

2 Activities that utilize mobile cranes shall include load chart exercises for each type of crane in use at the activity (i.e. truck, crawler, and cruiser with either hydraulic telescoping or lattice booms, category 4, etc.) in the Specific Crane Written Examinations.

1. Q: What is the operator's main concern during crane operations?
   A: Operating safely.

2. Q: What two expiration dates are of particular importance to all crane operators?
   A: The expiration date of the certification for the crane being operated, and the expiration date of the operator's license.

3. Q: When can an unlicensed crane operator trainee operate a crane?
   A: Only under the direct observation of a licensed operator.

4. Q: Give four examples of types of Category 1 cranes.
   A: (Any four of the following) Portal, hammerhead, locomotive, truck, cruiser, crawler, derrick, floating, tower, container, and aircraft crash crane.

5. Q: What are the principal parts of most Category 1 and Category 4 cranes?
   A: Boom, machinery house, roller path or rotate bearing, supporting structure, and travel system.

6. Q: What is the definition of "boom length"?
   A: The distance from the boom "heel" or "foot" pins to the center of the boom tip sheave (or, for articulating booms, to the boom attachment point for the hook) .

7. Q: What is a jib boom?
   A: An extension attached to the main boom used when lifting light loads to a higher elevation than that permitted by the main boom.

8. Q: What is the purpose of a hoist limit switch?
   A: To prevent overtravel of the hook block and the possibility of two-blocking.

9. Q: What is two-blocking? Why is two-blocking dangerous?
A: Two-blocking occurs when the hook block comes in contact with the upper sheave block during hoisting of the hook (or lowering the boom). Two-blocking is dangerous because it could result in damage to the crane, parting of the hoist lines, and dropping the load.

10. Q: What types of power does a Category 1 or 4 crane generally use and what is its source?
A: Electric or hydraulic power supplied by a diesel engine.

11. Q: How is electrical current conveyed from the revolving portion of the crane to the lower crane structure?
A: Through a collector ring system.

12. Q: Define the term "radius".
A: "Radius" is the horizontal distance from a projection of the axis of rotation to the ground or water line, before loading, to the center of the hoist line(s) with load applied.

13. Q: On mobile crane load charts, what is the significance of the bold lines separating the various capacities? Why are they important?
A: Capacity ratings below the heavy lines are based on crane tipping. They are important because even slight overloads could cause the crane to tip over.

14. Q: What are the minimum required clearances when operating near overhead electrical transmission lines?
A: The minimum clearance depends on the line's voltage. For 50,000 volts and under, the minimum clearance is 10 feet. The minimum clearance increases as the line voltage increases.

15. Q: Give three factors that shall be considered when selecting a crane for a particular job.
A: The weight of the load, the radius of the lift, and the height of the lift.

16. Q: When are operators required to perform an operator's daily check of the crane?
A: A complete check of the crane shall be performed by the operator prior to the first use of the crane each day whether the crane is used in production, maintenance, testing, or being relocated. The first operator in each subsequent shift that day shall perform required the operational checks. All other operators shall review and sign the initial ODCL and review any tags posted on the crane.

17. Q: Who is responsible for cleanliness and housekeeping of a crane?
A: The operator.

18. Q: Why is it important to have bent or dented crane boom members inspected and evaluated?

A: Bends and dents can greatly reduce the strength of a boom, possibly resulting in sudden collapse of the boom.

19. Q: What is the minimum amount of rope that shall be on grooved drums? Smooth drums?
A: Two full wraps on grooved drums and three full wraps on smooth drums.

20. Q: During performance of your pre-operational check you find minor deficiencies. What do you do?
A: Note the deficiency on the ODCL and turn the card in to your supervisor at the end of the operation or shift.

21. Q: Describe all the actions required if an asterisked item on the ODCL is found unsatisfactory.
A: Stop operations. Notify the supervisor of the condition. Annotate the ODCL.

22. Q: When is it permissible for an operator to leave the controls of a crane while a load is suspended from the hook?
A: The operator shall remain at the controls at all times while a load is suspended from the hook until relieved by another operator except as specifically allowed by P-307, paragraph 10.7.

23. Q: Who has primary responsibility for determining the weight of an object to be hoisted?
A: The rigger in charge has primary responsibility, however, the operator shall determine for him/her self that the estimated weight to be lifted (at the required radius) will not exceed the safe load carrying capacity of the crane as posted on the load chart.

24. Q: Why should the hook be positioned directly over the load when attaching the load?
A: To avoid side loading of the boom and dragging the load as it is picked up.

25. Q: Who is responsible for making certain that a load is properly secured and balanced before a lift is made?
A: Primary responsibility is the rigger's, but the operator shall not lift a load if he/she detects any defects in the attachment.

26. Q: When should a tagline be used during lifting operations?
A: When the load shall be prevented from swinging or rotating, such as operation in windy conditions and handling odd shaped loads.

27. Q: Is it necessary for the operator to see the load or work area?
A: Not if there is a designated signal giver who is in control of the lift and is in view of the operator, or if the signal giver is in constant radio contact with the operator.

28. Q: Under what conditions should the operator refuse to obey a signal?

A: When, in his/her opinion, the signaled movement will endanger the crane, the load, or personnel in the vicinity.

29. Q: What should an operator do if he/she is not sure of the meaning of a signal?
A: Stop the machine until the meaning of the signal is understood.

30. Q: What signal may an operator obey from a person other than the designated signal giver?
A: When given a stop signal from anyone, the operator shall stop the crane.

31. Q: How should an operator check the hoist brakes when lifting a load?
A: Lift the load slightly off the ground and hold momentarily to ensure there is no slippage of the brakes.

32. Q: Why should crane swing be relatively slow?
A: To prevent outward swing of the load due to centrifugal force.

33. Q: Why should extreme caution be used when lifting loads from the water?
A: Because the load on the crane may increase as the object leaves the water due to loss of buoyancy, water held inside the object, and surface tension (suction).

34. Q: Describe the proper method of landing a load.
A: Lower the load slowly, stopping a few inches from the landing point. Then slowly lower the rest of the way.

35. Q: When should the rotate locking device be engaged?
A: Whenever the operator leaves the cab or controls. If required by the mobile crane OEM, while the crane is traveling with a load in "pick and carry" mode. Any other time required by the mobile crane OEM.

36. Q: In cold weather operation, what precautions should be taken to avoid damage when sheaves may be frozen?
A: When performing the operation portion of the pre-operational check, raise the hooks and boom before lowering them.

37. Q: What should be done when leaving a crane at the end of the work shift?
A: Ensure all controls are in the "off" position. Set the rotate locking devices and drum pawls. Secure power.

APPENDIX H- BASIC QUESTIONS FOR CATEGORY 2 AND CAB OPERATED CATEGORY 3 CRANE OPERATORS WRITTEN TEST

Note: Activities shall supplement this list with questions pertinent to the specific types of crane(s) at the activity as well as the activity's unique mission and safety requirements. Elimination of non pertinent questions and modification to suit activity applicability is permitted. (Q = Question/A = Answer)

1. Q: What is the operator's main concern during crane operations?
   A: Operating safely.

2. Q: What two expiration dates are of particular importance to all crane operators?
   A: The expiration date of the certification for the crane being operated, and the expiration date of the operator's license.

3. Q: When can an unlicensed crane operator trainee operate a crane?
   A: Only under the direct observation of a licensed operator.

4. Q: When are operators required to perform an operator's daily check of the crane?
   A: A complete check of the crane shall be performed by the operator prior to the first use of the crane each day whether the crane is used in production, maintenance, testing, or being relocated. The first operator in each subsequent shift that day shall perform the required operational checks. All other operators shall review and sign the initial ODCL and review any tags posted on the crane.

5. Q: During performance of your pre-operational check you find minor deficiencies. What do you do?
   A: Note the deficiency on the ODCL and turn the card in to your supervisor at the end of the operation or shift.

6. Q: Describe all the actions required if an asterisked item on the ODCL is found unsatisfactory.
   A: Stop operations. Notify the supervisor of the condition. Annotate the ODCL.

7. Q: What is the minimum amount of rope that shall be on grooved drums? On smooth drums?
   A: Two full wraps on grooved drums and three full wraps on smooth drums.

8. Q: Who is responsible for cleanliness and housekeeping of a crane?
   A: The operator.

9. Q: What are the principal parts of an overhead traveling crane?
   A: Bridge girders, end trucks, trolley with hoisting mechanism, and operator's cab or pendant control.

10. Q: What is the purpose of a hoist limit switch?

A: To prevent overtravel of the hook block and the possibility of two-blocking.

11. Q: What is two-blocking? Why is it dangerous?
A: Two-blocking occurs when the hook block comes in contact with the upper sheave block during hoisting of the hook. Two-blocking is dangerous because it could result in damage to the crane, parting of the hoist lines, and dropping the load.

12. Q: How is current carried from building or shore power to the bridge and trolley of Category 2 and 3 cranes?
A: By an insulated electrification conductor system, festoon system, or cable track system.

13. Q: What is meant by "skewing"?
A: A condition where one end of the bridge gets ahead of the other end, frequently causing binding on the rails.

14. Q: What may cause the bridge to skew?
A: Wheel slippage on one side only because of slippery track, or a heavy load suspended from one end of the bridge.

15. Q: How may excessive skew be straightened?
A: By slowly bumping the bridge into the end stops.

16. Q: When is it permissible for an operator to leave the controls of a crane while a load is suspended from the hook?
A: The operator shall remain at the controls at all times while a load is suspended from the hook until relieved by another operator except as specifically allowed by P-307, paragraph 10.7.

17. Q: What disadvantage exists from a very high mounting of an overhead traveling crane?
A: The operator may have difficulty in judging position and in seeing signals.

18. Q: What signal may an operator obey from a person other than the designated signal giver?
A: When given a stop signal from anyone, the operator shall stop the crane.

19. Q: Is it necessary for the operator to see the load or work area?
A: Not if there is a designated signal giver who is in control of the lift and is in view of the operator, or if the signal giver is in constant radio contact with the operator.

20. Q: Under what conditions should the operator refuse to obey a signal?
A: When, in his/her opinion, the signaled movement will endanger the crane, the load, or personnel in the vicinity.

21. Q: What should an operator do if he/she is not sure of the meaning of a signal?

A: Stop the machine until the meaning of the signal is understood.

22. Q: Who has primary responsibility for determining the weight of an object to be hoisted?
A: The rigger in charge has primary responsibility, however, the operator shall determine for him/her self that the estimated weight to be lifted will not exceed the safe load carrying capacity of the crane.

23. Q: Who is responsible for making certain that a load is properly secured and balanced before a lift is made?
A: Primary responsibility is the rigger's, but the operator shall not lift a load if he/she detects any defects in the attachment.

24. Q: When should a tagline be used during lifting operations?
A: When the load shall be prevented from swinging or rotating, such as operation in windy conditions and handling odd shaped loads.

25. Q: Why should the hook be positioned directly over the load when attaching the load?
A: To avoid side loading of the hoist and/or dragging the load as it is picked up.

26. Q: What work is done in the first hoisting position of a hoist?
A: Taking the slack out of the lines slowly, and starting to move a light load or empty hook smoothly.

27. Q: How should an operator check the hoist brakes when lifting a load?
A: Lift the load slightly off the ground and hold momentarily to ensure there is no slippage of the brakes.

28. Q: What is dynamic lowering control?
A: An automatic device that speeds the lowering of an empty hook or light load, and slows a heavy load.

29. Q: Describe the proper method of landing a load.
A: Lower the load slowly, stopping a few inches from the landing point. Then slowly lower the rest of the way.

30. Q: Why shall sudden starts and stops of the bridge and trolley be avoided?
A: Sudden starts and stops may cause skidding and uneven wear of the wheels.

31. Q: What is meant by "inching"?
A: Performing a motion very slowly, a very little at a time.

32. Q: If a heavy load shall be inched into an exact vertical position, should the final adjustment be made by raising or lowering? Why?
A: By lowering. When hoisting, the load may inadvertently lower while the master switch is moved from neutral to a hoist speed high enough to support and raise the load.

33. Q: At what point during a lift may trolley or bridge travel be started?
A: When the tracks are clear and the load is high enough off the ground to pass over obstacles safely.

34. Q: What is meant by plugging?
A: Use of reverse power instead of a brake to slow or stop the bridge or trolley travel. This method of braking is not used for hoisting or lowering motions.

35. Q: What precaution should be taken when stopping the crane by plugging?
A: Be ready to use the foot brake instantly if the power should fail.

36. Q: What should be done when leaving a crane at the end of the work shift?
A: Ensure all controls are in the "off" position. Open the main switch.

37. Q: What extra precaution should be taken against wind movement when securing an outdoor crane?
A: The bridge brake shall be locked or the bridge shall be locked by setting the spud lock or by blocking.

APPENDIX I - BASIC QUESTIONS FOR MOBILE BOAT HOIST AND RUBBER-TIRED GANTRY CRANE OPERATORS WRITTEN TEST

Note: Activities shall supplement this list with questions pertinent to the specific types of mobile boat hoist(s) at the activity as well as the activity's unique mission and safety requirements. Elimination of non-pertinent questions and modification to suit activity applicability is permitted. (Q = Question/A = Answer)

1. Q: What is the operator's main concern during boat hoist operations?
   A: Operating safely.

2. Q: What two expiration dates are of particular importance to all mobile boat hoist operators?
   A: The expiration date of the certification for the mobile boat hoist being operated, and the expiration date of the operator's license.

3. Q: When can an unlicensed boat hoist operator trainee operate a boat hoist?
   A: Only under the direct observation of a licensed operator.

4. Q: When are operators required to perform an inspection of the mobile boat hoist?
   A: A complete check of the mobile boat hoist shall be performed by the operator prior to the first use of the crane each day whether the crane is used in production, maintenance, testing, or being relocated. The first operator in each subsequent shift that day shall perform the required operational checks. All other operators shall review and sign the initial ODCL and review any tags posted on the crane.

5. Q: During performance of your pre-operational check you find minor deficiencies. What do you do?
   A: Note the deficiency on the ODCL and turn the card in to your supervisor at the end of the operation or shift.

6. Q: Describe three actions required if an asterisked item on the ODCL is found unsatisfactory.
   A: Stop operations. Notify the supervisor of the condition. Annotate the ODCL.

7. Q: What is the minimum amount of rope that shall be on grooved drums and on smooth drums?
   A: Two full wraps on grooved drums and three full wraps on smooth drums.

8. Q: Who is responsible for cleanliness and housekeeping of a mobile boat hoist?
   A: The operator.

9. Q: What are the principal parts of mobile boat hoist?
   A: Mobile boat hoist frame with hoisting mechanisms and operator's cab or control station.

10. Q: What is the purpose of hoist limit switch(es)?
A: To prevent over travel of the lower sheave block and the possibility of two-blocking.

11. Q: What is two-blocking? Why is it dangerous?
A: Two-blocking occurs when the lower sheave block comes in contact with the upper sheave block during hoisting. Two-blocking is dangerous because it could result in damage to the mobile boat hoist, parting of the hoist lines, and dropping the load.

12. Q: What type of power is normally used for functions on a mobile boat hoist and how is it normally provided?
A: Hydraulic power supplied by a gas or diesel engine.

13. Q: When lifting boats, what two factors have the greatest effect on the stability of the lift?
A: Sling placement for load distribution and raising the hoists evenly.

14. Q: When lifting flat bottomed craft or causeways from the water, what is the best way to prevent additional loading due to surface tension or “suction” as the load exits the water?
A: Lift the load out of the water at a slight angle, forward to aft, so the flat bottom breaks the surface a little at a time rather than all at once.

15. Q: Why should the mobile boat hoist be traveled or towed relatively slowly?
A: To maintain safe control of the load.

16. Q: When is it permissible for an operator to leave the controls of a mobile boat hoist while a load is suspended from the hook?
A: The operator shall remain at the controls at all times while a load is suspended from the hook until relieved by another operator except as specifically allowed by P-307, paragraph 10.7.

17. Q: List two ways an operator may ensure the capacity of the mobile boat hoist is not exceeded?
A: Load indicators on the hoisting system and accurate load weights determined by data plates or engineering calculations.

18. Q: What signal may an operator obey from a person other than the designated signal giver?
A: When given a stop signal from anyone, the operator shall stop the mobile boat hoist.

19. Q: Is it necessary for the boat hoist operator to see the entire load or work area?
A: Not if there is a designated signal giver who is in control of the lift and is in view of the operator, or if the signal giver is in constant radio contact with the operator.

20. Q: Under what conditions should the operator refuse to obey a signal?
A: When, in his/her opinion, the signaled movement will endanger the mobile boat hoist, the load, or personnel in the vicinity.

21. Q: What should an operator do if he/she is not sure of the meaning of a signal?
A: Stop the machine until the meaning of the signal is understood.

22. Q: Who has primary responsibility for determining the weight of an object to be hoisted?
A: The rigger in charge has primary responsibility, however, the operator shall determine for him/her self that the estimated weight to be lifted will not exceed the safe load carrying capacity of the mobile boat hoist.

23. Q: Who is responsible for making certain that a load is properly secured and balanced before a lift is made?
A: Primary responsibility is the riggers, but the operator shall not lift a load if he/she detects any defects in the attachment.

24. Q: When should a tagline be used during lifting operations?
A: When the load shall be prevented from swinging or rotating, such as operation in windy conditions and handling odd shaped loads.

25. Q: Why should the hook be positioned directly over the load when attaching the load?
A: To avoid side loading of the hoist and/or dragging the load as it is picked up.

26. Q: What work is done in the first hoisting position of a hoist?
A: Taking the slack out of the lines slowly, and starting to move a light load or empty hook smoothly.

27. Q: How should an operator check the hoist brakes when lifting a load?
A: Lift the load slightly off the ground and hold momentarily to ensure there is no slippage of the brakes.

28. Q: How shall the operator ensure that there is sufficient clearance and no obstacles in the path of the mobile boat hoist when traveling?
A: Always use a signal person positioned to watch for clearances and obstacles.

29. Q: Describe the proper method of landing a load.
A: Lower the load slowly, stopping a few inches from the landing point. Then slowly lower the rest of the way.

30. Q: What are four possible hydraulic functions controlled by the operator on a mobile boat hoist?
A: Hoisting, traveling, steering, and sling spacing.

31. Q: What is meant by "inching"?
A: Performing a motion very slowly, a very little at a time.

32. Q: What shall be done before you are qualified to operate a mobile boat hoist you are licensed to operate but are not familiar with?
A: You shall be checked out by an operations supervisor on the specific unit to be operated.

33. Q: In addition to having a license in your possession, what shall you also have to operate mobile boat hoists?
A: Authorization or assignment by a supervisor responsible for mobile boat hoist operations.

34. Q: List three things that should be done when leaving a mobile boat hoist at the end of the work shift?
A: Ensure all controls are in the "off" position, the lower sheave blocks are in the stowed position, and all brakes are set.

35. Q: What extra precaution should be taken against movement when securing a mobile boat hoist?
A: The tires shall be blocked.

36. Q: For a two-speed hoist, which speed should be used for lifting and lowering near-capacity loads?
A: Low speed.

APPENDIX J - BASIC PERFORMANCE TEST FOR WEIGHT-HANDLING EQUIPMENT OPERATOR LICENSE CATEGORY 1 AND 4 CRANES, EXCEPT MOBILE BOAT HOISTS AND RUBBER-TIRED GANTRY CRANES

Notes: (1) Prerequisite for this examination is complete familiarity with Standard Hand Signals for Controlling Crane Operations shown in figure 10-1.

(2) Performance test requirements shall be supplemented and modified by each activity for the particular operating characteristics and features of their cranes as well as the unique mission of the activity.

(3) Performance tests for category 4 cranes shall be modified, as necessary, for the type of crane being used.

GENERAL INFORMATION:

TESTING ACTIVITY:_____ TEST DATE:_____

APPLICANT'S NAME:_____

TO BE COMPLETED BY EXAMINER

MAKE AND MODEL OF TEST EQUIPMENT:_____

TYPE OF CONTROLS:_____

RESULTS: SATISFACTORY_____ UNSATISFACTORY_____

REMARKS: _____

_____

SIGNATURE:_____

GROUP A - PRE-OPERATION INSPECTION

1. WALK AROUND INSPECTION.

Note: Hook should be accessible for inspection.

_____ a. Ensure the crane is currently certified before proceeding.

_____ b. Check crane for tags or other operational restrictions or warnings.

_____ c. Assure no repairs are in progress.

_____ d. Assure no vehicles or objects are in a position where they might be struck by the crane and that no other ground or overhead obstacles and hazards are in the crane parking, travel, and work areas.

_____ e. Perform a pre-operational walk around inspection, a machinery inspection, and an operator cab inspection, and document on a Crane Operator's Daily Checklist (ODCL, figure 9-1). Do not begin operating inspection until directed by examiner.

_____ f. Remove wheel chocks, unfasten rail clamps, and remove rail truck spring wedges as required.

2. FAMILIARITY WITH LUBRICATION REQUIREMENTS.

_____ a. Check lubricant levels where accessible and identify points that may require lubrication during periods of operation.

GROUP B - STARTING THE ENGINE

_____ 1. Check position and disengage master switch, engine clutch, or hydraulic pump drive as applicable.

_____ 2. Check controller handles and assure that they are in neutral.

Note: The operator shall be required to explain to the examiner the function of these control handles and of all other pedals, levers, and switches on the machine.

_____ 3. Start engine in sequence and in the manner prescribed by the OEM.

_____ 4. Observe gauges for correct readings and describe purpose of gauges.

_____ 5. Allow engine to warm up as appropriate.

Note: Machines equipped with air or hydraulic controls shall not be operated until gauges show required operating pressure.

_____ 6. Engage master switch, engine clutch, or hydraulic pump drive as applicable, and watch for uncontrolled movement of the crane, boom, or hook.

_____ 7. Continue to warm up the engine as required by the OEM.

Note: The operator shall listen for any indication of improper conditions and shall report these and their significance to the examiner.

GROUP C - TESTING OPERATING CONTROLS

_____ 1. Close main switch if applicable.

_____ 2. Perform operating inspection and no load test portion of the pre-operation inspection and document on the ODCL. Lower limit switch test need only be performed where operationally possible.

_____ 3. When direct current is used to operate the test crane, observe ammeters, if any, and state whether or not their readings are proper for the movements made.

GROUP D - TRAVELING

Note: For self-propelled cranes.

_____ 1. Swing boom to center forward or other position as required by OEM for traveling.

_____ 2. Prepare crane for traveling in accordance with OEM's requirements.

_____ 3. Inform crane rigger, track walker, or railway brakeman of destination and allow him/her to direct the crane during its travel.

_____ 4. Proceed to test area.

GROUP E - OPERATING TESTS

Notes: (1) The following problems assume a full revolving crane. If the crane is a limited-swing derrick or a mobile crane with restricted swing due to stability, etc., the examiner shall require that it be swung in the fullest allowable arc.

(2) If it is a floating crane, it is assumed that the crane is moored alongside a dock or barge in still water with little wave action. If the water is rough during the test, the examiner may make allowances for the unsteadiness of the crane when applying the standards of accuracy set forth in these tests.

(3) Truck mounted cranes shall have at least a two part hoisting line on the hook block.

(4) The accuracy levels set forth for these tests are meant to be minimum standards. The activity may, based on local mission requirements, impose more stringent standards.

(5) At no stage of testing or operation shall the operator allow cables to become slack enough to become loose on the drums. This is an unacceptable practice and the examiner shall mark this action accordingly.

PROBLEM 1 - TEST FOR ACCURACY

Place an open container or other suitable target within the operating range of the crane. The target shall be at least half the height of the hook block and approximately 12 inches in diameter larger than the largest dimension of the hook block. The target shall be placed on a type of support that will not keep it from being knocked over when struck by the hook block or any other part of the crane. Adjust the boom angle so that the hook is inward from the target, swing the crane in a complete circle or to its fullest arc, and, without the help of signals, lower the empty hook block into the target without knocking it over. The operator shall make three attempts. A time limit may be imposed by the examiner.

The following actions are considered unacceptable:

_____ a. Failure to accurately place hook. The operator shall, in at least two out of three attempts, lower the empty hook into the target without knocking it over.

_____ b. Failing to keep safe distances from hazards. The operator shall not permit any part of the machine to come within 10 feet of obstructions.

_____ c. Striking. The operator shall not permit the hook to strike the ground, boom, or any object or person.

_____ d. Swinging abruptly. The operator shall not cause the hook to jerk, seesaw, or wobble while swinging.

_____ e. Swinging too rapidly. The operator shall not swing the crane so rapidly as to cause excessive throw of the hook by centrifugal force.

_____ f. Contacting limit switches.

PROBLEM 2 - LIFTING AND HANDLING HEAVY LOADS

Note: When hammerhead cranes are used, trolley motion shall be substituted where boom motions are requested.

The object or test weights to be lifted in this test should weigh between 25 percent and 50 percent of the rated capacity of the crane and shall be placed at an intermediate

position between the crane's minimum radius and the maximum radius for that load. If applicable, the operator, with such assistance as may be needed, shall extend and secure the outriggers. After the load is staged, properly rigged and attached to the hook, a line shall be drawn around it on the ground six inches out from its edges. One inch shall be added for every ten feet of radius beyond twenty feet. Upon receiving the proper signal, the operator shall lift the weight to clear the ground. Except for emergency signals, no other signal shall be given during this test. The operator shall then boom-out close to maximum operating radius, boom-in close to minimum radius, swing the crane one full revolution or in its fullest arc, and then set the load inside the line originally drawn around the weight. When approaching the original position, the examiner, rigger, or a qualified assistant may rotate the load with taglines to conform to the drawn outlines, but without guiding the load into the desired position.

The following actions are considered unacceptable:

_____ a. Failure to accurately place the load. The operator shall, in not more than two attempts, place the load inside the marked area.

_____ b. Failing to obtain a firm level position (Mobile cranes only). The operator shall not handle the load until the crane is in a firm and level position and outriggers deployed, if required.

_____ c. Placing the hook inaccurately. The operator shall place the hook within six inches of the attaching point of the load without taking more than two compensating moves before specific assistance of a rigger is required.

_____ d. Hoisting the load prematurely. The operator shall not hoist until the load has been properly secured, the rigger is clear of the load, and the hoist signal is given.

_____ e. Failing to observe improper rigging. The operator shall inform the examiner whenever, in the opinion of the operator, the rigging appears to be improper or unsafe.

_____ f. Delaying hoist action. The operator shall hoist the load promptly when so signaled.

_____ g. Snapping the load. The operator shall take the slack out of the line in a slow controller position before applying the full hoisting power.

_____ h. Failing to test brake. The operator shall stop hoisting the load when it is a few inches above the ground or deck and apply the brake to make sure that it will hold the load.

_____ i. Failing to preserve stability. The operator shall not boom down to the extent that the position of the load exceeds the safe operating radius of the crane.

_____ j. Failing to keep safe distances from hazards. The operator shall not permit any part of the machine to come within 10 feet of obstructions.

_____ k. Striking. The operator shall not permit the hook or load to strike the ground, boom, or any object or person.

_____ l. Swinging abruptly. The operator shall not cause the load to jerk, seesaw, or wobble while swinging.

_____ m. Swinging too rapidly. The operator shall not swing the crane so rapidly as to cause excessive throw of the load by centrifugal force.

_____ n. Endangering Personnel. The operator shall not position the load over personnel and shall sound a warning for them to stay clear of the crane and the load.

_____ o. Failing to insert tilt blocks in chocked position(Locomotive cranes only). The operator shall not lift a heavy load until tilt blocks are inserted to eliminate truck spring action.

_____ p. Dropping the load. The operator shall not allow the load to strike the ground abruptly.

_____ q. Exceeding the allowable swing arc. The operator shall not rotate the crane beyond the allowable swing arc for mobile cranes nor contact limit switches for limited arc cranes and derricks.

PROBLEM 3 - ABILITY TO FOLLOW SIGNALS ACCURATELY

Place a screen or use a bulkhead or building so that the operator can not see any part of the load or its supporting slings during the operation. The load shall be light enough not to affect the stability or balance of the crane. A competent signal person or rigger shall direct the operator in the following actions:

(1) Placing the hook so that the rigger can attach the load.

(2) Lifting the load.

(3) Placing the load so that the operator shall adjust the boom angle and swing the boom.

(4) Allowing a rigger to detach the load.

(5) Lifting the hook clear of the load.

The following actions are considered unacceptable:

_____ a. Moving without signals. When working with the aid of a signal person or rigger, the operator shall not move any part of the crane except in response to signals. The operator may stop the crane without signals if he/she feels the signaled move is unsafe.

_____ b. Responding to signals inaccurately. The operator shall take prompt and appropriate action in response to each signal. If the operator fails to understand a signal, he/she shall stop the crane until the signal is understood.

_____ c. Responding to "Go" signals abruptly. The operator shall not engage any controller so abruptly as to start any movement with a jerk.

_____ d. Responding to "Stop" signals too slowly. The operator shall not continue any action after being directed to stop.

_____ e. Hoisting the load prematurely. The operator shall not hoist until the rigger is clear of the load and the hoist signal is given.

_____ f. Delaying hoist action. The operator shall hoist the load promptly when so signaled.

_____ g. Snapping the load. The operator shall take the slack out of the line in a slow controller position before applying the full hoisting power.

_____ h. Swinging abruptly. The operator shall not cause the load to jerk, seesaw, or wobble while swinging.

_____ i. Swinging too rapidly. The operator shall not swing the crane so rapidly as to cause excessive throw of the load by centrifugal force.

_____ j. Failing to obtain a firm level position. The operator shall not handle the load until the crane is in a firm and level position (outriggers deployed if required).

PROBLEM 4 - LIFTING AND HANDLING ODD-SHAPED OR SHIFTING LOADS

Note: For cranes capable of traveling with loads.

Over an approximately 200 linear feet course (suitable for the type of crane being used), lift and carry a light to moderate weight load approximately 20 feet long. Pipe, beams, logs, or loose lumber are acceptable. Place the load at the end of the course as directed by the examiner. A ground man or rigger using a tagline to control excessive swing or rotation of the load shall assist the operator.

The following actions are considered unacceptable:

_____ a. Failing to maintain a firm level position. The operator shall not handle or travel with the load unless the crane is in a firm and level position that can be maintained through the travel operation.

_____ b. Hoisting the load prematurely. The operator shall not hoist until the load has been properly secured and the rigger is clear of the load and the hoist signal is given.

_____ c. Failing to observe improper rigging. The operator shall inform the examiner whenever in the opinion of the operator, the rigging appears to be improper or unsafe.

_____ d. Delaying hoist action. The operator shall hoist the load promptly when so signaled.

_____ e. Snapping the load. The operator shall take the slack out of the line in a slow controller position before applying the full hoisting power.

_____ f. Failing to test brake. The operator shall stop hoisting the load when it is a few inches above the ground or deck and apply the brake to make sure that it will hold the load.

_____ g. Failing to preserve stability. The operator shall not boom down to the extent that the position of the load exceeds the safe operating radius of the crane.

_____ h. Failing to keep safe distances from hazards. The operator shall not permit any part of the machine to come within 10 feet of obstructions.

_____ i. Striking. The operator shall not permit the hook or load to strike the ground, boom, or any object or person.

_____ j. Swinging abruptly. The operator shall not cause the load to jerk, seesaw, or wobble while swinging.

_____ k. Swinging too rapidly. The operator shall not swing the crane so rapidly as to cause excessive throw of the load by centrifugal force.

_____ l. Endangering Personnel. The operator shall not position the load over personnel and shall sound a warning for them to stay clear of the crane and the load.

_____ m. Dropping the load. The operator shall not allow the load to strike the ground abruptly.

GROUP F - RETURNING, STOPPING AND SECURING THE CRANE

_____ 1. Move machine into designated parking area.

_____ 2. Set boom at approximately 45° angle with hook block hanging 4 to 8 feet below boom point sheaves or place in boom cradle if required.

_____ 3. Rotate boom into proper location to set house or wind lock.

_____ 4. Set all controllers in neutral, set drum pawls, and open master switch. Disengage engine clutch or hydraulic pump drive as applicable.

_____ 5. Stop engine as prescribed.

(INTENTIONALLY LEFT BLANK)

APPENDIX K
BASIC PERFORMANCE TEST
FOR WEIGHT HANDLING EQUIPMENT OPERATOR LICENSE
CATEGORY 2 AND CAB OPERATED CATEGORY 3 CRANES

Notes: (1) Prerequisite for this examination is complete familiarity with Standard Hand Signals for Controlling Overhead and Gantry Cranes shown in figure 10-2.

(2) Performance test requirements shall be supplemented and modified by the activity for the particular operating characteristics and features of the cranes as well as the unique mission of the activity.

(3) The performance testing includes evaluation of the operator's ability to follow hand signals. Unacceptable actions include moving without signal and incorrect response to signals. If the operator will be required to operate without seeing the load, the test shall be modified accordingly. Additional criteria for testing ability to follow hand signals and blind operation are included in appendix K basic performance test problem #3.

GENERAL INFORMATION:

TESTING ACTIVITY:_____ TEST DATE:_____

APPLICANT'S NAME:_____

TO BE COMPLETED BY EXAMINER

MAKE AND MODEL OF TEST EQUIPMENT:_____

TYPE OF CONTROLS:_____

RESULTS: SATISFACTORY_____ UNSATISFACTORY_____

REMARKS: _____

_____

SIGNATURE:_____

GROUP A - PRE-OPERATION INSPECTION

1. PRELIMINARY INSPECTION AROUND CRANE.

_____ a. Ensure crane is currently certified before proceeding.

_____ b. Check crane for tags or other operational restrictions or warnings.

_____ c. Assure no repairs are in progress.

_____ d. Perform inspections listed on the Operator's Daily Checklist (ODCL) and document on the ODCL. Do not operate crane until instructed by the examiner.

_____ e. If accessible, check tracks for obstructions, misalignment, damage, loose connections, and conditions that may impact proper operation.

_____ f. Check work area for hazards and obstacles. Request correction before proceeding when necessary.

2. FAMILIARITY WITH LUBRICATION REQUIREMENTS.

_____ a. Check lubricant levels where accessible and identify points that may require lubrication during periods of operation.

GROUP B - TESTING OPERATING CONTROLS

_____ 1. Check to assure that all controllers are in the "Off" position.

_____ 2. Energize the crane.

_____ 3. If equipped, check action of deadman controls.

_____ 4. Test action of hoist controller by raising, lowering, and stopping the hook.

_____ 5. Test action of travel controllers and brakes by moving the crane back and forth a few feet. Check for proper brake action.

_____ 6. Test trolley controllers and brakes by moving trolley back and forth a few feet. Check for proper brake action..

_____ 7. Test limit switches and other safety devices.

_____ 8. Check warning devices and gauges. Notify examiner of discrepancies.

_____ 9. Document the operating test portion on the ODCL.

GROUP C - OPERATING

Notes: (1) The accuracy standards indicated are considered minimum. The activity may impose more stringent standards based upon local or mission requirements.

(2) At no stage of the testing shall the operator allow the wire rope to become slack enough to loosen on the drum. This is an unacceptable practice and the examiner shall mark this action accordingly.

PROBLEM 1 - TEST FOR ACCURACY

Place an open container or other suitable target within the operating range of the crane and near one corner of the test area. The target should be at least half the height of the hook block and approximately 12 inches in diameter larger than the largest dimension of the hook block. The crane shall be positioned so that the hook is over the diagonally opposite corner of the work area. The operator shall position the hook over the container or target. Simultaneous controller operation, i.e., both bridge and trolley travel, shall be tested as appropriate. The operator shall demonstrate proficiency in placing the hook in the container or at the target location.

Note: The following actions are considered unacceptable:

_____ a. Striking. The operator shall not permit the hook to strike anything.

_____ b. Operating abruptly. The operator shall not cause the hook to swing excessively while operating.

_____ c. Contacting limit switches.

PROBLEM 2 - LIFTING AND HANDLING HEAVY LOADS

The load to be lifted in this test should weigh between 25 percent and 50 percent of the crane's rated capacity. The operator shall be told to treat the load as a heavy load. Use of a test weight is recommended. After the load is staged, properly rigged, and attached to the hook, a line shall be drawn on the floor 4 inches beyond the perimeter of the load. Upon receiving the proper signal, the operator shall lift the load just above the floor and test the operation of automatic brakes and foot brakes as appropriate. The operator shall be directed to move the load through a predetermined course that tests the operators ability to move the load. The course shall require diagonal movement or multiple controller movements as appropriate. The operator shall then return the load to the marked area. A rigger may assist by rotating the load, but shall not guide the load or direct load movement.

Note: The following actions are considered unacceptable:

_____ a. Failing to keep safe distances. The operator shall not permit any part of the crane or load to pass too closely to obstructions.

_____ b. Striking. The operator shall not permit the load or hook to strike the ground or any object or person.

_____ c. Abrupt movement. The operator shall not cause the load to jerk, seesaw, or wobble due to movements of the crane.

_____ d. Hoisting the load prematurely. The operator shall not hoist until the load has been properly secured, the rigger is clear of the load, and the hoist signal is given.

_____ e. Failing to observe improper rigging. The operator shall inform the examiner whenever, in the opinion of the operator, the rigging appears to be improper or unsafe.

_____ f. Snapping the load. The operator shall remove any slack in the hoist line using a low speed controller position or other appropriate method.

_____ g. Failing to test brakes. Brakes shall be tested immediately after the load is lifted.

_____ h. Endangering personnel. The operator shall not position the load over personnel and shall sound a warning gong or siren and wait for personnel to clear the area.

_____ i. Improperly landing the load. The operator shall demonstrate proficiency in safely and smoothly landing the load within the marked perimeter.

PROBLEM 3 - LIFTING AND HANDLING ODD-SHAPED OR SHIFTING LOADS

The operator shall lift and carry a light to moderately heavy load approximately twenty feet long over a predetermined course. Pipe, logs, beams, or loose lumber are acceptable. A rigger shall give the operator directions using hand signals and control the load using tag lines.

Note: The following actions are considered unacceptable:

_____ a. Placing the hook incorrectly. The operator shall demonstrate proficiency in locating the hook as required for the lift.

_____ b. Hoisting prematurely. The operator shall not hoist until the load has been properly secured, the rigger is clear of the load, and the hoist signal is given.

_____ c. Improper rigging. Failure to identify unsafe rigging.

_____ d. Snapping the load. The operator shall remove any slack in the hoist line using a low speed controller position or other appropriate method.

_____ e. Endangering personnel. The operator shall not position the load over personnel and shall sound a warning gong or siren and wait for personnel to clear the area.

_____ f. Failing to keep safe distances. The operator shall not permit any part of the crane or load to pass too closely to obstructions.

_____ g. Striking. The operator shall not permit the load or hook to strike the ground or any object or person. The load shall be safely and smoothly landed as directed.

_____ h. Swinging abruptly. The operator shall not cause the hook to jerk, seesaw, or wobble due to movements of the crane.

GROUP D - SECURING THE CRANE

_____ 1. Move the crane to the proper storage location.

_____ 2. Place hook in the appropriate storage location, normally in its uppermost position, below any upper limit switch.

_____ 3. Place all controllers in neutral.

_____ 4. Secure the power supply and lock as appropriate.

(INTENTIONALLY LEFT BLANK)

APPENDIX L BASIC PERFORMANCE TEST
FOR WEIGHT-HANDLING EQUIPMENT OPERATOR LICENSE
MOBILE BOAT HOISTS AND RUBBER-TIRED GANTRY CRANES

Notes: (1) Prerequisite for this examination is complete familiarity with Standard Hand Signals for Controlling Crane Operations shown in figure 10-1.

(2) Performance test requirements shall be supplemented and modified by each activity for the particular operating characteristics and features of their mobile boat hoist as well as the unique mission of the activity.

(3) Performance tests may be modified to assess an operator's ability to safely operate a mobile boat hoist used for purposes other than lifting boats in or out of the water. For example, some mobile boat hoists are only used to place crafts on maintenance blocks. Similarly, this test may be modified as needed for rubber-tired gantry cranes.

GENERAL INFORMATION:

TESTING ACTIVITY: _____ TEST DATE: _____

APPLICANT'S NAME: _____

TO BE COMPLETED BY EXAMINER

MAKE AND MODEL OF TEST EQUIPMENT: _____

TYPE OF CONTROLS: _____

RESULTS: SATISFACTORY_____ UNSATISFACTORY_____

REMARKS: _____

_____

SIGNATURE: _____

GROUP A - PRE-OPERATION INSPECTION

1. WALK AROUND INSPECTION.

Note: Hooks should be accessible for inspection.

_____ a. Ensure the mobile boat hoist is currently certified before proceeding.

_____ b. Check mobile boat hoist for tags or other operational restrictions or warnings.

_____ c. Assure no repairs are in progress.

_____ d. Assure no vehicles or objects are in a position where they might be struck by the mobile boat hoist and that no other ground or overhead obstacles and hazards are in the mobile boat hoist parking, travel, and work areas.

_____ e. Perform a pre-operational walk around inspection, a machinery inspection, and an operator cab inspection, and document on a Crane Operator's Daily Checklist (ODCL, figure 9-1). Do not begin operating inspection until directed by examiner.

_____ f. Remove wheel chocks or wedges as required.

2. FAMILIARITY WITH LUBRICATION REQUIREMENTS.

_____ a. Check lubricant levels where accessible.

_____ b. Identify points that may require lubrication during periods of operation.

GROUP B - STARTING THE ENGINE

_____ 1. Check position and disengage master clutch or hydraulic pump drive as applicable.

_____ 2. Check controller handles and assure that they are in neutral.

Note: The operator shall be required to explain to the examiner the function of these control handles and of all other pedals, levers, and switches on the machine.

_____ 3. Start engine in the manner prescribed by the OEM.

_____ 4. Observe gauges for correct readings and describe purpose of gauges.

_____ 5. Observe load indicators for correct readings without loads, if applicable.

_____ 6. Allow engine to warm up as appropriate.

Note: Machines equipped with air or hydraulic controls shall not be operated until gauges show required operating pressure.

_____ 7. Engage master clutch or hydraulic-pump drive as applicable, and watch for uncontrolled movement of the mobile boat hoist or hook.

_____ 8. Continue to warm up the engine as required by the OEM.

Note: The operator shall listen for any indication of improper conditions and shall report these and their significance to the examiner.

GROUP C - TESTING OPERATING CONTROLS

_____ 1. Perform operating inspection and no load test portion of the pre-operation inspection and document on the ODCL. Lower-limit switch test, if applicable, need only be performed where operationally possible.

GROUP D - TRAVELING

Note: For self-propelled mobile boat hoists.

_____ 1. Prepare mobile boat hoist for traveling in accordance with OEM's requirements.

_____ 2. Inform signal person of destination and allow him/her to direct the mobile boat hoist during its travel.

_____ 3. Proceed to test area.

GROUP E - OPERATING TEST

Notes: (1) Tests shall be conducted using loads that are 25 to 50 percent of the capacity of the mobile boat hoist, where possible.

(2) Where tests must be done using actual boats or when lifting craft close to the capacity of the mobile boat hoist, additional steps shall be taken to mitigate any risks during the test. This may include positioning additional personnel able to kill power to the mobile boat hoist to stop all motion in the event the operator being tested makes an error that may result in damage or injury. Such tests shall be conducted in a highly controlled environment ensuring the safety of all equipment and personnel.

(3) When lifting boats in and out of the water, conduct the test only in protected waters with little wave action, where possible.

(4) Operator shall follow OEM procedures for keeping equal wraps of wire rope on drums and/or equal tension on hoists at all times. At no stage of testing or operation shall the operator allow wire rope to become slack enough to become loose on the drums.

LIFTING AND HANDLING HEAVY LOADS

The load used for the test is to be lifted from a staged area, traveled to the designated launch area, and lowered to the water. The operator shall move only upon receiving the proper signals from the signal person. The performance examiner shall give direction to the signal person. The load shall be hoisted to a sufficient height ensuring balanced loading before traveling. When lowering the load to the water, as the load comes in contact with the water and before any slings become slack, the signalman shall stop the operator and signal the operator to begin hoisting the load. The load shall be hoisted to a sufficient height and traveled back to the starting point where it will be placed in the staging area. Test the operator's ability to maneuver the mobile boat hoist by predetermining a course that will require some steering.

_____ a. Moving without signals. The operator shall not move any part of the mobile boat hoist except in response to signals. The operator may stop without signals if he/she feels the signaled move is unsafe.

_____ b. Responding to signals inaccurately. The operator shall take prompt and appropriate action in response to each signal. If the operator fails to understand a signal, he/she shall stop the mobile boat hoist until the signal is understood.

_____ c. Failing to observe improper rigging. The operator shall inform the examiner whenever, in the opinion of the operator, the rigging appears to be improper or unsafe.

_____ d. Hoisting the load prematurely. The operator shall not hoist until the load has been properly secured, the rigger is clear of the load, and the hoist signal is given.

_____ e. Snapping the load. The operator shall take the slack out of the line in a slow controller position before applying the full hoisting power.

_____ f. Failing to test brake. The operator shall stop hoisting the load when it is a few inches above the ground or deck to make sure that the brake will hold the load.

_____ g. Failing to raise the hoists equally and/or failing to check load indicators to ensure they indicate equal loading of the hoists.

_____ h. Failing to keep safe distances from hazards. The operator shall not permit any part of the machine to come within 10 feet of obstructions.

_____ i. Striking. The operator shall not permit the hook or load to strike the ground, boom, or any object or person.

_____ j. Endangering Personnel. The operator shall not position the load over personnel or allow personnel to ride the load. The operator shall sound a warning for them to stay clear of the mobile boat hoist and the load.

_____ k. Dropping the load. The operator shall not allow the load to strike the ground abruptly.

_____ l. Responding to "Go" signals abruptly. The operator shall not engage any controller so abruptly as to start any movement with a jerk.

_____ m. Responding to "Stop" signals too slowly. The operator shall not continue any action after being directed to stop.

GROUP F - RETURNING, STOPPING AND SECURING THE MOBILE BOAT HOIST

_____ 1. Move mobile boat hoist into designated parking area.

_____ 2. Raise the hooks and lifting beams to the stowed position or height.

_____ 3. Place all controllers in neutral, set brakes; disengage master clutch or hydraulic pump drive, as applicable.

_____ 4. Stop engine as prescribed by OEM.

_____ 5. Set wheel chocks where required.

(INTENTIONALLY LEFT BLANK)

APPENDIX M - PROCEDURES FOR THIRD PARTY CERTIFICATION BY THE NAVY CRANE CENTER

Note: These procedures are for Navy owned cranes, derricks, container spreaders, and below the hook lifting devices. Non-Navy owned equipment (including rented, leased, and contractor owned and operated cranes, derricks, and other devices) requiring third party certification shall be certified to OSHA standards by a private OSHA accredited certification agency.

1 Cranes and Derricks. As prescribed in section 1, cranes and derricks used in cargo transfer and floating cranes and floating derricks (including barge-mounted mobile cranes) used in shipbuilding, ship repair, and shipbreaking are required by OSHA to be certified by an OSHA accredited certification agency. Certification requirements are addressed in 29 CFR 1915, 29 CFR 1917, 29 CFR 1918, and 29 CFR 1919. OSHA has recognized this publication as an alternate standard to those certification requirements for Navy owned cranes and derricks provided the certification is performed by the Navy Crane Center. It is Navy policy that this publication shall be used in lieu of the above noted CFRs as the standard for certification of Navy owned cranes and derricks used in the above noted operations. Therefore, all applicable Navy owned cranes and derricks shall be certified by a representative of the Navy Crane Center. This is in addition to the certification by the local certifying official required by this publication.

In addition to annual third party certification, a third party certification is required whenever an interim recertification that requires a load test is required per section 3.

1.1 Procedures. A certification will be granted by the Navy Crane Center "signatory authority" upon successful completion of the following:

a. Documentation Review. The signatory authority shall ensure that documentation prescribed by this publication is complete, current, and correct. For floating cranes (including mobile cranes mounted on barges), ensure the material inspection report for the barge is current and indicates the barge is fit for further service per OPNAVINST 4780.6. Review documentation of the current depot availability and any approved deferrals of depot availability and ensure the requirements or conditions of the deferral have been met.

b. Condition Inspection. The signatory authority shall perform a condition inspection and complete the applicable portions of figure 3-3 (Crane Condition Inspection Record).

c. Load Test. The signatory authority shall witness the activity's load test.

(1) To accommodate an activity’s extension of the annual certification for emergent work, an operational test with partial (e.g., 25 percent of capacity) load shall be performed in lieu of the load test noted above.

1.2 Certification. Upon successful completion of the procedures in paragraph 1.1, and upon certification by the activity certifying official, a Certificate of Unit Test and/or Examination of Crane, Derrick, or Other Material Handling Device, figure M-1, will be issued by the signatory authority. This certificate shall be posted in the operator's cab. A copy of the certificate shall be filed in the Equipment History File for the crane or derrick. In addition to retaining a copy of the certificate, the signatory authority shall forward copies to the Navy Crane Center and to the OSHA (Federal) Area Office having cognizance over the activity. For certifications performed to support the activity's certification extension, item 5 (Test Loads) shall be left blank; the "tested and examined" option of line 7 shall be lined out; and the test loads used for the operational test shall be noted on line 6. The accuracy of the load indicating device (if fitted) shall be checked with the test load used. In addition, indicate on line 6 that this certification will expire when the activity's certification extension expires.

1.3 Deficiencies Precluding Certification. Should the signatory authority find deficiencies that preclude third party certification and the deficiencies can not be corrected immediately, a Notice to Owner of Deficiencies Found on Certification Survey, figure M-2, will be issued. This notice shall be posted in the operator's cab until the crane or derrick is certified by the signatory authority. In addition to retaining a copy of the notice, the signatory authority shall forward copies to the Navy Crane Center and to the OSHA Area Office.

2 Container Spreaders and Below the Hook Lifting Devices Used in Cargo Transfer. This is a one-time third party certification. The signatory shall thoroughly inspect the entire assembly and review any associated documentation (design drawings, material lists, etc.). Upon satisfactory inspection, the signatory authority shall witness a load test at 125 percent of the rated load of the assembly and perform an additional inspection after the load test. Proof of load test by the OEM is acceptable in lieu of a load test by the activity. Upon successful completion of these procedures, a certificate (figure M-1) will be completed and signed by the signatory authority. The certificate shall be retained in the file for the particular device.

NAVFAC
Naval Facilities Engineering Command
NAVY CRANE CENTER

Certificate of Unit Test and/or Examination of Crane, Derrick, or Other Material Handling Device

This certificate may be issued only by persons specifically approved by the Navy Crane Center to comply with the Navy's Alternate Standard for Certification of Weight Handling Equipment. NAVFAC P-307 has been approved by the U.S. Department of Labor, Occupational Safety and Health Administration, as an alternate means of compliance with the provisions of 29 CFR Part 1919.

Certificate No.: _____

1. Owner: _____

2. Description (check): Crane ___ Derrick ____ Other (describe) _____
   Location: (a) Remains at worksite _____ (b) Changes worksite _____ (c) Aboard vessel _____
   If (a) or (c), describe: _____
   If crane, type (truck, rail, etc.): _____
   Manufacturer: _____ Model: _____ Serial No.: _____
   If derrick, describe: _____
   Owner's identification, if any: _____

3. Service status at time of survey (check): Lifting _____ Clamshell _____ Magnet _____
   Other, Describe: _____

4. Boom at time of survey (except bridge cranes): Length _____ Type _____

5. Test loads applied (cross out if only examination conducted):

Radius	Proof Loads (TEST LOAD)	Rated Loads
_____	_____	_____
_____	_____	_____
_____	_____	_____
_____	_____	_____

   Means of application of proof load: _____
   Basis for assigned load ratings: _____

6. Remarks and/or limitations imposed: _____
   _____

7. Load indicating or limiting device (check): Fitted _____ Not fitted _____ Accuracy _____

I certify that on the _____ day of _____, 20 ____, the above described device was (tested and examined) (examined) by the undersigned or his/her authorized representative; that said (test and examination) (examination) met in all respects with the requirements of NAVFAC P-307, an OSHA approved alternate standard for compliance with the provisions of 29 CFR Part 1919; any deficiencies considered to constitute an unsatisfactory condition have been corrected; and that the device has been found to be in compliance in all applicable respects with the governing requirements.

Name and address of accredited or otherwise authorized organization making the test and/or examination: Navy Crane Center, Bldg 491 NNSY, Portsmouth, VA 23709.

Name and address of authorized person carrying out the test and/or examination: _____
_____

Position of signatory in the organization making the test and/or examination: _____
_____

Distribution:
Original - Owner (post in operator cab)
Copies to - Owner (equipment history file)
Certifier
OSHA Area Office
Navy Crane Center

Signature: _____

Date: _____

FIGURE M-1

NAVFAC
Naval Facilities Engineering Command
NAVY CRANE CENTER

Notice to Owner of Deficiencies Found on Certification Survey

This notice may be issued only by persons specifically approved by the Navy Crane Center to comply with the Navy's Alternate Standard for Certification of Weight Handling Equipment. NAVFAC P-307 has been approved by the U.S. Department of Labor, Occupational Safety and Health Administration, as an alternate means of compliance with the provisions of 29 CFR Part 1919.

1. Owner: _____

2. Identification, location, and specific description of equipment: _____
_____

3. The undersigned, being authorized to do so, hereby tenders notification of the following listed uncorrected deficiencies, found upon (test and examination) (examination) of the described equipment in accordance with the requirements of NAVFAC P-307, to constitute in the opinion of the undersigned a currently unsatisfactory condition.

_____
_____
_____
_____
_____
_____
_____
_____
_____
_____

4. Under the applicable requirements of NAVFAC P-307, an OSHA approved alternate standard for compliance with the provisions of 29 CFR Part 1919; the issuance of any certificate of (test and examination) (examination) is prohibited until such time as correction of deficiencies has been verified by the undersigned. It is further required that the certificating authority notify the nearest local office of the Occupational Safety and Health Administration of the above circumstances, by copy of this notice.

5. Name and address of accredited or otherwise authorized organization making the test and/or examination: Navy Crane Center, Bldg 491 NNSY, Portsmouth, VA 23709.

6. Name and address of authorized person carrying out the test and/or examination: _____
_____

7. Position of signatory in the organization making the test and/or examination: _____
_____

Distribution:
Original - Owner (post in operator cab)
Copies to - Certifier
OSHA Area Office
Navy Crane Center

Signature: _____

Date: _____

FIGURE M-2

APPENDIX N - PERSONNEL QUALIFICATIONS

1. The following personnel who perform functions addressed in this publication shall demonstrate (to the satisfaction of their supervisors) adequate knowledge and/or skill in the areas listed below.

Note: Specific qualification requirements for licensed operators are identified in sections 6 through 8.

1.1 Maintenance Personnel (Mechanics and Electricians)

a. Proper use and care of precision instruments and recording of measurements.

b. Lockout/tagout procedures.

c. Maintenance requirements for components (e.g., brakes, clutches, drive trains, motors, controls) integral to the operation of WHE within the person's technical discipline.

d. For mechanics, basic electrical safety; for electricians, electrical safety and familiarity with the National Electrical Code (NEC).

e. Proper fastening and lubricating techniques.

1.2 Inspector

a. Requirements of sections 2, 3, and 5, and appendices C, D, and E of this publication.

b. For mechanical inspectors, inspection requirements for crane structure, brakes, clutches, drive trains, wire rope, and other mechanical components integral to the operation of WHE.

c. For electrical inspectors, NEC requirements as well as inspection requirements for electrical motors, motor control circuits, and other electrical components integral to the operation of WHE.

d. Proper use and care of precision instruments and recording of measurements.

e. Lockout/tagout procedures.

1.3 Load Test Director

a. Requirements of section 3 and appendices C, D, and E of this publication.

b. Proper use and care of precision instruments and recording of measurements.

c. Lockout/tagout procedures.

d. Calculation of weight for load tests.

e. General knowledge of the operational characteristics of the WHE and components being tested.

f. Ability to interpret OEM load charts.

g. Limits of stability of the WHE being tested.

h. Proper crane communications, i.e., hand signals (See figures 10-1 and 10-2), radio communications, etc.

1.4 Operator of Non-Cab Operated Category 3 WHE. (For the specific type of equipment being operated and the types of lifts the operator will be required to make.)

a. Operation of the equipment.

b. Determining the weights of loads.

c. Determining the center of gravity of loads.

d. Planning the crane/load movement path and checking for clearances.

e. Selecting and properly using appropriate rigging equipment.

f. Basic knots, bends, and hitches, and their use.

g. Performing necessary calculations to determine the allowable capacity of rigging configurations.

h. Selecting appropriate attachment points on loads to be lifted.

i. Performing prior-to-use visual inspections of rigging equipment.

j. Performing prior-to-use inspection and operation of WHE being operated.

k. Directing of other personnel assisting in the rigging evolution.

l. Accident and equipment deficiency problem recognition and reporting procedures.

m. Proper crane communications, i.e., hand signals (See figures 10-1 and 10-2), radio communications, etc.

1.5 Rigger

a. Determining the weights of loads.

b. Determining the center of gravity of loads.

c. Planning the crane/load path and checking for clearances.

d. Selecting and properly using appropriate rigging equipment.

e. Basic knots, bends, and hitches and their use.

f. Performing necessary calculations to determine the allowable capacity of rigging configurations.

g. Selecting appropriate attachment points on loads to be lifted.

h. Performing prior-to-use visual inspections of rigging equipment.

i. Signal person functions as noted below, including construction signal person as appropriate.

j. Coordinating activities of other personnel assisting in the lift (when designated as Rigger-in-Charge).

k. General knowledge of mobile crane configuration variations and load chart limitations.

l. The requirements of section 10 (as applicable to riggers) and section 14 of this publication.

m. Acceptable rail switch alignment requirements (as applicable).

n. Requirements for inspecting the crane travel path.

1.6 Crane Walker

a. Acceptable methods for initiating emergency stop actions and an understanding of when such actions are appropriate.

b. Acceptable rail switch alignment requirements.

c. Requirements for inspecting the crane travel path.

1.7 Crane Signal Person

a. Proper crane communications, i.e., hand signals (See figures 10-1 and 10-2), radio communications, etc.

b. Acceptable methods for initiating emergency stop actions and an understanding of when such actions are appropriate.

In addition to the above, signal persons used in construction operations, including riggers, shall be qualified by an activity's qualified evaluator. Qualification shall be documented and shall specify each type of signaling for which the signal person is qualified.

Each signal person including riggers giving signals:

(c) Shall know, understand, and be competent in the types of signals used.

(d) Have a basic understanding of equipment operation and limitations, including the crane dynamics involved in swinging and stopping loads and boom deflection from hoisting loads.

(e) Know and understand the relevant requirements for radio, telephone, or other electronic transmission of signals as applicable.

(f) Demonstrate to the evaluator that he/she meets the above noted requirements through an oral or written test, and through a practical test.

2 Supervisors

2.1 Operator Supervisors. Crane operator supervisors shall demonstrate adequate knowledge in the following areas:

a. Conducting pre-job briefings.

b. Assessing personnel qualifications to operate specific cranes and how to determine that those qualifications are current.

c. Familiarity with safe operating practices, including the requirements of section 10 of this publication.

2.2 Rigger Supervisors. Rigger Supervisors (for weight handling evolutions) shall demonstrate adequate knowledge in the following areas:

a. Conducting pre-job briefings.

b. Assessing personnel qualifications to perform specific operations and how to determine that those qualifications are current.

c. Knowledge and abilities noted for Rigger in paragraph 1.5 above, including the requirements of sections 10 and 14 of this publication.

2.3 Maintenance, Inspector, and Load Test Director Supervisors. Supervisors shall demonstrate adequate knowledge in the following areas:

a. Conducting pre-job briefings.

b. Assessing personnel qualifications to perform specific operations and how to determine that those qualifications are current.

c. Familiarity with the applicable requirements of this publication.

3 Engineers. Engineers performing work in support of WHE shall:

a. Be technically competent in their particular engineering discipline.

b. For crane engineers, be knowledgeable of the design fundamentals of WHE and UFC 3-320-7N, and the requirements of sections 2 through 5 and appendices C through F of this publication.

c. For rigging engineers, be knowledgeable of ASME B30.9, military and federal standards for rigging gear, and sections 10 and 14 of this publication.

4 WHE Certifying Officials. WHE Certifying Officials shall demonstrate adequate knowledge in the application of the requirements of this publication for inspection, maintenance, testing, and certification of WHE.

APPENDIX O
NAVY CRANE CENTER POLICY AND GUIDANCE FOR CRANE ALTERATION REQUESTS

1. The Navy Crane Center will review crane alteration requests (CAR) identified as urgent by the activity on a highest priority basis.

2. The scope of Navy Crane Center reviews will be limited to the specific subject of the submitted request. When a peripheral non-compliance or unsafe condition is noted, Navy Crane Center will address it as an advisory comment to the activity.

3. Appropriate activity industrial process instructions will be accepted where applicable.

4. Fatigue shall be analytically addressed in requests dealing with new shafts or other components subject to fatigue. For shafts, the analysis shall be performed in accordance with ANSI/AGMA 6001-D97.

5. CARs addressing shaft misalignment shall show parallel and angular alignment measurements and measurement techniques to be utilized for the measurements. The coupling OEM's initial, running, and ultimate alignment tolerances, as well as details of alignment securing features such as shear bars, pins, bolts, etc. shall also be shown.

6. CARs addressing components that experience lateral or shear loads designed to be resisted by shear bars shall include calculations and installation procedures demonstrating design assumptions are satisfied.

7. CARs are not required and should not be submitted for complex lift procedures and maintenance operations.

8. CARs intended for application to a number of cranes shall designate those cranes by their unique identification numbers in addition to capacity/type and OEM. Designations such as "general" and "various" shall not be used.

9. When a discrepancy between the design and the as-built condition for a load bearing or load controlling part or an operational safety device is discovered, the activity engineering organization and the Navy Crane Center shall first evaluate the condition. If the decision is to retain the as-built condition, a CAR titled "Documentation (as-built variance)" is required. If the design is determined correct and the decision is to reconfigure the crane to the designed condition, no CAR is required.

10. Navy Crane Center reviews locally approved CARs submitted for information. These CARs will be processed as follows:

a. Locally approved CARs with significant errors or deficiencies will be over-stamped "Returned with Comments" and returned. Any further action on returned CARs will be at the discretion of the local activity. If a corrected/revised CAR is resubmitted, it should be identified by revision letter "A" or the next sequential letter after the previous revision.

b. Navy Crane Center use of the "Reclassified" designation will be limited to those CARs that, according to section 4, were improperly locally approved.

11. For microprocessor controlled cranes, mandatory alterations will not be issued until the initiating activity (or their delegated alternate) proves the software and/or hardware change by utilizing the crane in service for a minimum of 3 months. Exceptions will be evaluated on a case basis.

12. Additional guidance and examples related to adjustments governed by paragraph 4.4.4. There are too many components on a crane to provide an all-inclusive list. Examples, other than brakes, are:

a. Adjusting the set point of limit switches is not an alteration provided their functionality is not changed. However, changing a line of computer code is an alteration.

b. Adjustments to hoist clutches are alterations for Navy Crane Center approval unless within the crane OEM provided range/tolerance.

c. Adjustments to properly align gears and couplings are not alterations.

d. Adjustments to bearing preload or clearance within bearing OEM ranges are not alterations.

e. Adjustments to diesel engines within diesel engine OEM ranges are not alterations.

f. Adjustments to electrical overloads and electrical protective devices are alterations for Navy Crane Center approval unless within the crane OEM range.

g. Adjustments to hydraulic pressure relief valves are alterations for Navy Crane Center approval unless within the crane OEM range.

h. Adjustments to load shutdown devices outside of OEM prescribed ranges/tolerances are alterations for Navy Crane Center approval with the exception of temporary adjustments for the purpose of load testing.

13. Crane Alterations are not required when the certified capacity of a mobile crane is changed due to changes in reeving, or reduced testing values due to size of test loads, or reduced available line pull (appendix E, paragraph 5.5.1.a); this information shall be entered on the crane's Certification of Load Test and Condition Inspection. Local crane alterations are required to change the capacity of a mobile crane for ORM, environmental conditions, or operational efficiency.

14. Relocating a crane, hoist or hoist/trolley from one location or crane to another location (not on the same rail) and/or crane is considered an alteration to the crane and the hoist or hoist/trolley.

15. Copies of CAR forms, standing crane alterations, and mandatory alterations are available from Navy Crane Center.

CERTIFICATE OF COMPLIANCE

This certificate shall be signed by an official of the company that provides cranes (or multi-purpose machines, material handling equipment, or construction equipment used to lift loads suspended by rigging gear) or rigging gear for any application under this contract. Post a completed certificate on each crane or alternate machine (or in the contractor's on-site office for rigging operations) brought onto Navy property.

CONTRACTING OFFICER'S POINT OF CONTACT (Government Representative)	PHONE
PRIME CONTRACTOR/PHONE	CONTRACT NUMBER
CRANE OR ALTERNATE MACHINE SUPPLIER/PHONE (if different from prime contractor)	CRANE OR ALTERNATE MACHINE NUMBER (i.e., ID number)
CRANE OR ALTERNATE MACHINE MANUFACTURER/TYPE/CAPACITY	
CRANE OR ALTERNATE MACHINE OPERATOR'S NAME(S)	

I certify that

1. The above noted crane or alternate machine and all rigging gear conform to applicable OSHA regulations (host country regulations for naval activities in foreign countries) and applicable ASME B30 standards. The following OSHA regulations and ASME standards apply:_____
2. The operators noted above have been trained and are qualified for the operation of the above noted crane(s) or alternate machine(s).
3. The operators noted above have been trained not to bypass safety devices during lifting operations.
4. The operators, riggers and company officials are aware of the actions required in the event of an accident as specified in the contract.

COMPANY OFFICIAL SIGNATURE	DATE
COMPANY OFFICIAL NAME/TITLE	

POST ON CRANE (OR ALTERNATE MACHINE)

(IN CAB OR VEHICLE)

(or in the contractor's on-site office for rigging operations)

FIGURE P-1

CONTRACTOR CRANE OR RIGGING OPERATION CHECKLIST

		YES	NO
1	Is the Certificate of Compliance, P-1, in the operator's cab (or in the contractor's on-site office for rigging operations) with the current operator's name listed?		
2	Is the crane/machine transited to and from the job site correctly? Are the OEM instructions for travel being followed?		
3	Does the operator know the weight of the load to be lifted?		
4	Is the load to be lifted within the crane/machine manufacturer's rated capacity in its present configuration?		
5	Are outriggers or stabilizers required?		
6	If outriggers are required, are outriggers fully extended and down, and the crane load off the wheels?		
7	Is the crane/machine level and on firm ground, if the ground is not firm is the crane/machine blocked?		
8	If blocking is required, is the entire surface of the outrigger pad supported and is the blocking material of sufficient strength to safely support the loaded outrigger pad?		
9	If outriggers are not used, is the crane/machine rated for on-rubber lifts by the manufacturer's load chart? If stabilizers are used and not outriggers and the wheels are not off the ground is this the correct setup in accordance with the OEM?		
10	Is the swing radius of the crane counterweight clear of people and obstructions and accessible areas within the swing area barricaded to prevent injury or damage?		
11	Has the hook been centered over the load in such a manner to minimize swing?		
12	Is the load well secured and balanced in the sling or lifting device before it is lifted more than a few inches?		
13	Is the lift and swing path clear of obstructions?		
14	If rotation of the load being lifted is hazardous, is a tag or restraint line being used?		
15	Are personnel prevented from standing or passing under a suspended load?		
16	Is the operator's attention diverted?		
17	Are proper signals being used at all times? Is the operator responding properly to the signals? Are radios used for blind lifts?		
18	Is the load lifted a few inches to ensure it is secure and balanced?		
19	Are empty hooks lashed or otherwise secured during travel to prevent swinging?		
20	Does the operator remain at the controls while the load is suspended?		
21	Do the operations ensure that side loading is prohibited?		
22	Are personnel prevented from riding on a load?		
23	Are start and stop motions in a smooth fluid motion (no sudden acceleration or deceleration)?		
24	If operating near electric power lines, are the rules and guidelines understood and adhered to?		
25	Is the lift a critical lift?		
26	If so, are all regulations understood and check-off sheets initialed and signed off?		
27	Are any overhead power lines in the vicinity?		
28	If so, are complex lift rules and 1926.1407-1411 being followed?		
29	If pick and carry operations are allowed and performed, are OEM directions followed (e.g. rotation lock engaged, boom centered over front or rear, etc.)?		
30	When the crane/machine is left unattended, is it in a safe condition?		
31	Is rigging gear undamaged and acceptable for the application?		

FIGURE P-2 (1 of 2)

32	Does rigging gear meet applicable ASME or host country standards (e.g. ASME B30.9 for slings, B30.10 for hooks, B30.26 for hardware such as shackles, safety hoist rings, eyebolts, etc, B30.20 for below the hook lifting devices, etc.)?		
33	Is the rigging gear inspected prior to use?		
34	Is chafing gear used to protect slings (especially synthetic slings) and equipment from damage due to sharp corners and edges?		
35	Is the rigging gear used in accordance with its working load limit? Is the load limit visible?		
36	Are positive latching devices used on crane and rigging hooks, or are the hooks "moused"?		

Contractor:	Subcontractor:
Location:	Date:
Notes:	
Signature of Contracting Officer's Representative:	

FIGURE P-2 (2 of 2)

(INTENTIONALLY LEFT BLANK)

APPENDIX Q - REFERENCES

Note: When referring to the following criteria, the latest edition or revision shall apply.

1. Unified Facilities Criteria (UFC) 3-320-07N, *Weight Handling Equipment*, Department of Defense, Washington, D.C.

2. SECNAV Instruction 4440.31, *Management of Civil Engineering Support Equipment and Material Handling Equipment*, Department of the Navy, Office of the Secretary, Washington, D.C.

3. SECNAV Instruction 11260.2, *Navy Weight Handling Program for Shore Activities*, Department of the Navy, Office of the Secretary, Washington, D.C.

4. OPNAV Instruction 3500.39, *Operational Risk Management*, Department of the Navy, Office of the Chief of Naval Operations, Washington, D.C.

5. OPNAV Instruction 4780.6, *Procedures for Administering Service Craft and Boats in the U.S. Navy*, Department of the Navy, Office of the Chief of Naval Operations, Washington, D.C.

6. OPNAV Instruction 4790.2, *The Naval Aviation Maintenance Program (NAMP)*, Department of the Navy, Office of the Chief of Naval Operations, Washington, D.C.

7. OPNAV Instruction 4790.4, *Ships' 3-Maintenance Material Management*, Department of the Navy, Office of the Chief of Naval Operations, Washington, D.C.

8. OPNAV Instruction 5102.1, *Navy and Marine Corps Mishap And Safety Investigation Reporting And Record Keeping Manual* Department of the Navy, Office of the Chief of Naval Operations, Washington, D.C.

9. OPNAV Instruction 5100.23, *Navy Occupational Safety and Health (NAVOSH) Program*, Department of the Navy, Office of the Chief of Naval Operations, Washington, D.C.

10. Unified Facilities Guide Specification 01-35-26, *Governmental Safety Requirements*, Department of the Navy, Naval Facilities Engineering Command, Washington, DC.

11. NAVCRANECEN Instruction 11200.33, *Weight Handling Equipment Audits, Validations, and Third Party Certifications; Procedures for Conducting*, Department of the Navy, Naval Facilities Engineering Command, Navy Crane Center, Portsmouth, VA.

12. NAVCRANECEN Instruction 11450.1, *Acquisition of Navy Shore Based Weight Handling Equipment,* Department of the Navy, Naval Facilities Engineering Command, Navy Crane Center, Portsmouth, VA.

13. NAVFAC Instruction 11230.1, *Inspection, Certification, and Audit of Crane and Railroad Trackage*, Department of the Navy, Naval Facilities Engineering Command, Washington, DC.

14. NAVFAC P-300, *Management of Transportation Equipment*, Department of the Navy, Naval Facilities Engineering Command, Washington, DC.

15. Unified Facilities Criteria (UFC) 3-430-07, Operations and Maintenance: *Inspection and Certification of Boilers and Unfired Pressure Vessels*, Department of Defense, Washington, DC.

16. NAVFAC MO-118, *Inspection of Vertical Transportation Equipment*, Department of the Navy, Naval Facilities Engineering Command, Alexandria, VA.

17. *NAVSEA 04 Crane Quality Manual*, Department of the Navy, Naval Sea Systems Command, Washington, D.C.

18. NAVSEA 0989-030-7000, *Lifting Standard*, Department of the Navy, Naval Sea Systems Command, Washington, D.C.

19. NAVSEA 0P 5, Volume 1, *Ammunition and Explosives Ashore: Safety Regulations for Handling, Storing, Production, Renovation and Shipping*, Department of the Navy, Naval Sea Systems Command, Washington, D. C.

20. NAVSEA 0P 3565, *Electromagnetic Radiation Hazards (Hazards to Ordnance),* Department of the Navy, Naval Sea Systems Command, Washington, D. C.

21. NAVSEA Technical Publication T9074-AS-GIB-010/271, *Requirements for Nondestructive Testing Methods*, Department of the Navy, Naval Sea Systems Command, Washington, D.C.

22. Naval Ships' Technical Manual S9086-UU-STM-010, Chapter 613: *Wire and Fiber Rope and Rigging*, Department of the Navy, Naval Sea Systems Command, Washington, D.C.

23. NAVSUP Publication 538, *Materials Handling Equipment Maintenance Manual*, Department of the Navy, Navy Supply Systems Command, Washington, D.C.

24. EM 385-1-1, *Safety and Health Requirements Manual*, Department of the Army, U.S. Army Corps of Engineers, Washington, D.C.

25. Federal Specification RR-W-410, *Wire Rope and Strand,* Federal Supply Services, Kansas City, MO

26. Federal Specification RR-C-271, *Chain and Attachments, Welded and Weldless*, Federal Supply Services, Kansas City, MO

27. Code of Federal Regulations, Title 29, Subpart B, Chapter XVII, Part 1910, *Occupational Safety and Health Standards*; Part 1915, *Occupational Safety and Health Standards for Shipyard Employment*; Part 1917, *Marine Terminals*; Part 1918, *Safety and Health Regulations for Longshoring*; Part 1919, *Gear Certification*; Part 1926, *Safety and Health Regulations for Construction*, Occupational Safety and Health Administration (OSHA), Office of the Federal Register, National Archives and Records Administration, Washington, D.C.

28. U.S. Department of Transportation, Federal Highway Administration, Motor Carrier Safety Regulation, 49 Code of Federal Regulations, Part 391 Sections 41-43, *Physical Qualifications and Examinations*.

29. ASME B30.3, B30.5, B30.8 through B30.10, B30.16, and B30.20 through B30.22, B30.23, B30.26, *Safety Standards for Cableways, Cranes, Derricks, Hoists, Hooks, Jacks, and Slings*, American Society of Mechanical Engineers, New York, NY.

30. ASME BTH-1, *Design of Below-The-Hook Lifting Devices*, American Society of Mechanical Engineers, New York, NY.

31. ASME B1.1, *Unified Inch Screw Threads*, American Society of Mechanical Engineers, New York, NY.

32. ASTM A 275, *Magnetic Particle Inspection of Steel Forgings*; E 1417, *Standard Practice for Liquid Penetrant Examination*; A36, *Standard Specification for Carbon Structural Steel*; A322, *Standard Specification for Steel Bars, Alloy, Standard* Grades; A325, *Standard Specification for Structural Bolts, Steel, Heat Treated, 120/105ksi Minimum Tensile Strength*; A449, *Standard Specification for Quenched and Tempered Steel Bolts and Studs*; A489, Standard Specification for Carbon Steel Eyebolts; A576, *Standard Specification for Steel Bars, Carbon, Hot Wrought, Special Quality*; A314, *Standard Specification for Stainless Steel Billets and Bars for Forging*, *A276 Standard Specification for Stainless Steel Bars and Shapes; E 543, Standard Specification for Agencies Performing Nondestructive Testing; F541, Standard Specification for Alloy Steel Eyebolts, American Society for Testing and Materials, West Conshohocken, PA.*

33. ASME *Safety Standard for Portable Automotive Lifting Devices (PALD)*, American Society of Mechanical Engineers, New York, NY

34. ANSI/AGMA 6001-D97, *Design and Selection of Components for Enclosed Gear Drives*, American Gear Manufacturers Association, Alexandria, VA.

35. SAE J765, *Crane Load Stability Test Code*, Society of Automotive Engineers, Inc., Warrendale, PA.

36. Department of the Navy Civilian Human Resources Manual, Subchapter 792.3, Drug Free Workplace Program, Department of the Navy, Office of Civilian Personnel Management, Washington, D.C.

37. MIL-STD-1625, *Safety Certification Program for Drydocking Facilities and Shipbuilding Ways for U. S. Navy Ships*, Naval Sea Systems Command, Washington, D.C.

38. SAE J429, *Mechanical and Material Requirements for Externally Threaded Fasteners,* Society of Automotive Engineers, Inc., Warrendale, PA.

39. SAE J123, Surface Discontinuities On Bolts, Screws, And Studs In Fatigue Applications, Society of Automotive Engineers, Inc, Warrendale, PA.

40. SAE J159, Rated Capacity System, Society of Automotive Engineers, Inc, Warrendale, PA.

41. ISO 4039, Cranes -Wire Ropes -Care Maintenance, Installation, Examination, and Discard, International Organization for Standardization (ISO), 1, ch. de la Voie-Creuse, Case postale 56 CH-1211 Geneva 20, Switzerland

APPENDIX R - RELATED DOCUMENTS

Note: When referring to the following criteria, the latest edition or revision shall apply.

1. OPNAV Instruction 5450.218, *Mission, Functions and Tasks of Commander, Naval Facilities Engineering Command Headquarters*, Department of the Navy, Office of the Chief of Naval Operations, 0P-44, Washington, D.C.

2. Naval Ships' Technical Manual, S9086-T4-STM-010, Chapter 589, *Cranes*, Department of the Navy, Naval Sea Systems Command, Washington, D.C.

3. NAVSUP Instruction 10490.33, *Material Handling Equipment; Administration and Control of (SUP 0622)*, Department of the Navy, Naval Supply Systems Command, Washington, D.C.

4. ASME B30.2, B30.4, B30.6, B30.7, B30.11, and B30.17, *Safety Standards for Cableways, Cranes, Derricks, Hoists, Hooks, Jacks, and Slings*, American Society of Mechanical Engineers, New York, NY.

5. ANSI/AWS D1.1, *Structural Welding Code*, American Welding Society, Miami, FL.

6. CMAA #70, *Specifications for Electric Overhead Traveling Cranes*, Crane Manufacturers Association of America, Inc., Charlotte, NC.

7. CMAA #74, *Specifications for Top Running and Under Running Single Girder Electric Traveling Cranes Utilizing Under Running Trolley Hoist*, Crane Manufacturers Association of America, Inc., Charlotte, NC.

8. *Bob's Rigging and Crane Handbook*, Bob De Benidictus, Inc. Pellow Engineering Services, Kansas City, MO.

9. *Crane Handbook*, Construction Safety Association of Ontario, Etobicoke, Ontario, Canada.

10. *Handbook for Riggers*, W.G. Newberry, Canada.

11. *Handbook of Rigging for Construction and Industrial Operations*, McGraw Hill book Company, New York, NY.

12. *IPT's Crane and Rigging Handbook*, IPT Publishing and Training Inc., Alberta, Canada.

13. *Mobile Craning Today*, Operating Engineers Training Institute of Ontario, Ontario, Canada.

14. *Rigging Handbook, The Complete Illustrated Field Reference*, Jerry A. Klinke, ACRA Publishing, Stevensville, MI.

16. *Rigging Manual*, Construction Safety Association of Ontario Etobicoke, Ontario, Canada.

17. *Standard Code of Operating Rules for Railroads*, Association of American Railroads, Chicago, IL.

18. Weaver, W.M., *Whiting Crane Handbook*, Whiting Corporation, Harvey, IL.

19. *Wire Rope Users Manual*, Wire Rope Technical Board, Stevensville, MD.

20. *Wire Rope Sling Users Manual,* Wire Rope Technical Board, Stevensville, MD.

INDEX

Accident
Action 12-3
Definition 12-1
Discussion 12-1
Investigation and Reporting 12-3
Adverse Operating Conditions 4-3, 10-10
Aircraft and Helicopter Crash Cranes 1-2, 6-1
Alterations (See Crane Alterations)
Ancillary Equipment on Mobile Cranes, Exception for 3-5, E-21, E-25
Annual Certification 3-2
Annual Inspections (Category 2 and 3 Cranes) ..... 2-4, Appendix D
Applicable Equipment 1-1
Application for Crane Operator License 8-1
Articulating Boom Crane B-21, E-22
Area Safety 9-5
Balance Point Loads 11-2
Battery 9-3
Below the Hook Lifting Devices 14-19
Block 9-2
Blocks (Tackle, Snatch, and Wire Rope 14-16, 14-18
Boom and Jib 9-2
Boom Angle and Radius Indicator 9-4, 9-5
Boom Damage, Telescoping Booms 4-6
Boom Lacing Damage 4-7
Boom Length Indicator (Telescoping Boom Cranes) 11-5
Boom Main Chord Damage 4-6
Boom Stops 9-2, 10-7
Brakes 1-4, 2-4, 3-3, 4-3, 9-4, 9-6, 10-12
Capacity Ratings 11-1
Cargo Transfer Cranes, Third Party Certification 1-5, 3-10, M-1
Carrier Frame 9-2
Category 1 Cranes 1-1, 2-3
Category 2 Cranes 1-2, 2-4
Category 3 Cranes 1-2, 2-4
Category 4 Cranes 1-2, 2-4
Certification Program 3-1
Action 3-1
Date 3-1
Frequency 3-1
Certifying Official 1-4
Chain Inspection Criteria C-8, D-7
Chain Sling
Inspection Criteria 14-7

Rejection Criteria 14-7
Use Criteria 14-7
Changes to OEM Rated Capacity 4-2
Clarification, Request for 1-11
Clearance from Obstructions, Proper Clearance 10-11
Clutches 1-4, 3-2, 3-3, 9-4, 9-5
Commanding Officer 3-1, A-3
Communications During Lifts 10-6
Complex Lifts 10-3
Identification and Procedures 10-4
Component Setting Adjustments 4-5, O-2
Compressor 9-4
Condition Inspection 3-8
Container Spreaders 1-6, 14-1, 14-4
Continuance for Productive Service, Exception for 3-7
Contractor Crane Certificate of Compliance P-1
Contractor Crane Operation Checklist P-2
Contractor Operated Cranes 1-7
Contracting Officer Responsibilities 1-9, A-4
Control of Applications for Tests and Licenses 8-1
Controlled Disassembly and Re-assembly, Exception for 3-4
Covered Equipment (Rigging Gear and Misc. Equipment) 14-1
Crane Accident 12-1
Action 12-3
Definition 12-1
Discussion 12-1
Investigation and Reporting 12-3
Crane Alterations 1-4, 4-1
Additional Requirements and Exemptions ..... 4-2, Appendix O
Administrative Related Changes 4-3
Based on Prior Navy Crane Center Approval 4-2
Environmental Related Changes 4-2
Equipment Related Changes 4-3
Exceptions 4-6
Fabrication to Original Specifications 4-4
Inspection of Work 2-3
Locally Approved 4-2
Navy Crane Center Approved 4-1
OEM Changes 4-4
Operational Related Changes 4-2
Records 4-7
Request Form 4-1, 4-8
To Microprocessor Controlled Cranes 4-5
To OEM's Rated Capacity of WHE 4-2
Components that Pre-Date MIL-HDBK-1038 4-7

Crane Operating Envelope 12-1
Crane Safety Advisories 11-5
Crane Safety Course 7-2, 13-1
Crane Team 10-1
Crane Rigger 10-2
Crane Walker 10-2
Cranes Integral to Larger Machine Systems 14-1, 14-20
Damaged Crane Booms 4-6
Danger/Caution Tags 9-4
Deferral of Work 2-3
Deficiencies, Reportable 2-1
Definitions, Special 1-4
Designation of Certification Personnel 3-1
Deviation, Request for 1-11
Drug Free Workplace Program (DFWP) 7-1
Electric Motors 9-4, 9-7
Electrical Power Lines, Proper Clearance 10-11, 10-18
Electromagnetic Interference Susceptibility 10-7
Emergency Brakes on Wire Rope Drums ..... Appendix E
End Connections, Other 11-4
End Connections, Wire Rope 11-3
Engines ..... 1-4, 2-4, 3-3, 9-3, Appendix C
Equipment Deficiency Memoranda 11-5
Equipment Familiarity Checkouts 6-1
Equipment History File 5-1
Equipment Markings 14-2
Equipment Weights and Marking 10-6
Examiner 8-2
Exceptions, Military Unique Operation 1-1
Extension of Certification for Emergent Conditions, Exception for 3-4
Extension of Inspection and Maintenance Schedules 2-5
Eye Bolts 14-18
Fire Extinguishers 9-4, 9-5
Fleeting Sheave 9-6
Gantry 9-2
Gauges 9-4
General Operating Precautions 10-6
General Safety Devices 1-4, 9-6
Glass (windows) 9-3
Hand Signals 10-14
Handrails 9-2
Hardware 9-2
Hoist Roll Back 3-10, A-9
Hoisting and Lowering the Load 10-12
Hook 9-2
Hook Identification E-3

Hook Inspection and Testing E-1
Housekeeping 9-3
Incidental Licenses for Operation by Maintenance and Inspection Personnel 6-2
Indicator and Warning Lights 9-4
Industry Consensus Standard Equivalents 4-3
Inspection, Operator 9-1
Inspection Action, Lubrication and Servicing 2-5
Inspection and Corrective Action 2-2
Inspection Specifications 2-1
Insulated Links ..... Appendices C, D, E-3
Interchangeability 4-3
Interim Recertification 3-2
Interim Recertification Requirements for WHE in Relocatable Buildings 3-8
Introduction, Manual 1-1
Introduction, Rigging 14-1
Joint Bases 1-11, 14-1, 14-2
Ladders 9-3
Language Ability 7-1
Latching Boom Crane 3-4, A-10, E-17,18,19
Lashing 14-21
Leaks 9-3
Level Ground 11-1
Lever Operated Hoists 14-20
License, Crane Operator
- Applicability 6-1
- Application 8-1
- Authorization 8-2
- Authorized Operation 6-1
- Capacity 8-2
- Crane Safety Course 7-2
- Date Issued 8-2
- Disqualification, Grounds for 7-1
- Expiration 8-3
- Files 8-4
- Form and Content 8-1
- Identification 8-1
- Issuance 8-3
- Number 8-2
- Operation by Maintenance, Inspection, and Engineering Personnel 6-2
- Performance Tests 7-3
- Personal and Physical Qualifications 7-1
- Physical Faculties and Fitness 7-1
- Physical Qualification Requirements, Deviations from 7-1
- Possession of 6-1
- Qualification and Testing 7-1
- Qualified to Operate 8-2
- Record 8-2

Renewal Procedure 8-3
Restrictions 8-2
Revocation 8-3
Suspension 8-3
Test Equipment 7-3
Test Facilities 7-3
Test Reports 7-2
Type of Control 8-2
Use and Limitations of 6-1
Validity 8-2
Written Test for Operators 7-2, G-1, H-1, I-1
Licensing Procedures and Documentation 8-1
Licensing Program Personnel, Designation of 6-2
Lifting of Personnel 10-7
Lifting Operations 10-3
Limit Switches 9-6
Links and Rings 14-16
General Inspection 14-17
Repairs 14-17
Use Criteria 14-17
List and Trim Indicator (Floating Cranes) 9-5
Load Bearing Parts 1-3, F-1
Load Control 10-13
Load Controlling Parts 1-3, F-2
Load Rating Charts 9-4
Load Test (Rigging Gear and Misc. Equipment) 14-3
Load Test and Recertification Requirement 3-2
Load Testing 3-9
Load Tests
Articulating Boom Cranes E-22
Hammerhead Cranes E-15
Jib, Pillar, Pillar Jib, Monorail, and Fixed Overhead Hoist E-30
Mobile Cranes E-15
Overhead, Wall, and Gantry Cranes E-26
Portal and Floating Cranes E-4
Tower Cranes and Derricks E-15
Loading in Excess of Certified Capacity 3-8
Locally Approved Crane Alterations 4-2
Lockout/Tagout Procedures 11-5
Locomotive Cranes, Stability 11-1
Lubrication 2-4, 9-3
Lubrication and Servicing, Documentation 2-4
Machinery House Check 9-3
Maintenance Inspection Types and Frequency 2-3
Maintenance Inspections 2-1

Major Deficiency 1-4, 3-9
Mandatory Crane Alterations 4-1
Margin of Stability 11-1
Metal Mesh Slings 14-12
    Inspection Criteria 14-12
    Rejection Criteria 14-12
    Use Criteria 14-12
Mobile Cranes Temporarily Mounted on Barges 1-5, 1-8, 3-11, 4-3
Multi-Purpose Machines 1-7, 12-1, A-13
Non-Applicable Equipment 1-3
Non-Destructive Test
    Hooks E-2
    Insulated Links E-3
Non-Navy Owned Cranes at Naval Activities 1-6
Non-Shouldered Eyebolts 14-18
OEM's Operation Manual 10-3
OEM's Supplemental Safety Information 10-3
OEM's Supplemental Service Information 2-2
Oil Analysis ..... Appendices C and D
Operating Envelope 12-1
Operating Precautions 10-6
Operation Safety 10-1
Operation Safety Procedures 10-1
Operational Check 9-5
Operational Safety Devices 1-4, 9-6, F-2
Operator, Other Qualifications 7-1
Operator Cab Check 9-4
Operator Check (Non-Cab Operated Category 3 Cranes) 9-6
Operator Condition 10-2
Operator Detected Deficiencies 9-7
Operator Checks 9-1
Operator License Candidates, Training 13-1
Operator Licensing Program (See License, Crane Operator)
Operator Responsibilities 10-2
Operator Safety Procedures 10-1
Operator’s Daily Checklist (ODCL) Documentation 9-1
Outriggers/Stabilizers and Locking Devices 9-3, 9-5
Over the Side Lifting Limitation 11-3
Overhead Electrical Transmission Lines 10-11
Pendants 9-2
Performance Tests, Evaluating and Grading 7-3
Performance Test for Operators 7-2, J-1, K-1, L-1
Periodic Inspection (Rigging Gear and Misc. Equipment) 14-4
Periodic Load Test Frequencies and Inspections, (Rigging Gear and Misc. Eq.) 14-3
Portable A-Frames 14-20
Portable Floor Cranes 14-20
Portable Gantries 14-20

Portable Hoists 14-20
Portable Load Indicating Devices (Dynamometers, Load Cells, etc.) 14-20
Portable Manual and Powered Hoists 14-20
Positioning the Boom 10-11
Positioning the Crane for Stability 10-10
Pre-lift Preparation 10-5
Pre-Use Check (Non-Cab Operated Category 3 Cranes) 9-6
Pre-Use Check (Category 1, 2, 4 and Cab Operated Category 3 Cranes) 9-1
    Machinery House Check 9-3
    Operational Check 9-5
    Operator Cab Check 9-4
    Submission of ODCL 9-7
    Walk Around Check 9-2
Pre-Use Inspection (Rigging Gear and Misc. Equipment) 14-4
Purpose of Manual 1-1
Quadrennial Load Test 3-2
Qualifications of Personnel 1-5, 13-3
Radius Indicator 9-5, 9-6
Rated Capacity 3-9, 11-3
Recalibration, Exceptions for 3-7
Recertification Not Required, Travel Components on Portal Cranes 3-3
Record Formats 1-11
Record Keeping (Rigging Gear and Misc. Equipment) 14-2
Reeving 9-2
Relocatable Buildings, Interim Certification Requirements 3-8
Rented or Leased Cranes 1-6
Repairs 4-4
Repairs and Alterations (Rigging Gear and Misc. Equipment) 14-5
Replacement Parts 2-3, 4-3
Reportable Deficiencies 2-1
Required Courses for Crane Personnel 13-4, 13-5
Resin Sockets 11-3
Revision, Request for 1-11
Rigger 10-1
Rigger-in-Charge 10-1
Rigging Gear and Miscellaneous Equipment 14-1
Rigging Used in Load Testing E-4
Rotate Base 9-2
Rotating the Load 10-12
Safety Course for Operators 7-2, 13-1, 13-2, 13-4
Safety Devices 1-4, 10-2, F-2
Safety Guards and Plates 9-2
Securing the Crane 10-13
Selective Load Test 3-2
Servicing 2-4

Shackles 14-16
General Inspection 14-17
Use Criteria 14-17
Sheaves 9-2
Ship Repair 1-5
Shipbreaking 1-5
Shipbuilding 1-5
Shipyard Lifting and Handling Training 13-1
Shop Repair Order 2-2
Shoulder Eye bolts 14-18
Slewing Ring Bearings ..... 2-4, 5-2, Appendix C
Slings 14-5
Specification Data Sheets 2-2
Speltered Sockets 11-3
Stabilizers 9-3, 9-5
Stability Factors 11-2
Stability Testing and Calibration (Used and Altered Cranes) 11-1
Standing Crane Alterations 4-1
Stops, Boom 9-2
Swaged Connections 11-3
Swivel Hoist Rings 14-16
Swivels 14-16
Synthetic Rope Slings 14-13
Inspection Criteria 14-13
Rejection Criteria 14-13
Use Criteria 14-15
Synthetic Roundslings 14-15
Inspection Criteria 14-15
Rejection Criteria 14-15
Repairs 14-15
Use Criteria 14-15
Synthetic Slings 14-13
Synthetic Webbing Slings 14-14
Inspection Criteria 14-14
Rejection Criteria 14-14
Use Criteria 14-15
Technical Bulletin 4-3
Telescoping and Articulating Boom Damage 4-6
Test and Inspection Program (Rigging Gear and Misc. Equipment) 14-3
Test Loads 3-9, E-1, E-17
Test Speeds E-4
Test Weights 3-10
Testing and Recertification 4-7
Third Party Certification 1-5

Tipping 11-1
Tires 9-3
Tracks 9-3
Training, Introduction 13-1
Training and Qualification 13-1
Training
    Previously Licensed Operators 13-2
    Record Keeping 13-2
    Required Courses for Crane Personnel 13-4, 13-5
    Supervisors 13-2
Travel Components 3-3
Traveling the Crane 10-12
Truck, Cruiser, and Crawler Cranes, Stability Testing and Calibration 11-1
Type "A" Inspection ..... 2-4, appendix C
Type "B" Inspection ..... 2-4, appendix C
Type "C" Inspection ..... 2-4, appendix C
Types of Weight Handling Equipment ..... appendix B
Understanding the Crane 10-2
Unusual Noises 9-5
Vibration Analysis ..... 5-2, Appendices C and D
Visibility 9-4
Voiding of Certifications 3-4
Walk Around Check 9-2
Walkways 9-3
Wedge Socket Connections 11-3
Wedge Sockets 11-3
Wheels 9-3
Windlocks 9-3
Wire Rope 9-2
Wire Rope Certification 5-1
Wire Rope End Connections
    Approved End Connections 4-4
    Speltered Sockets, Poured 11-3
    Swaged Connections 11-3
Wire Rope Endless Slings 14-9
Wire Rope Rejection Criteria C-14, D-8
Wire Rope Slings 14-7
    Inspection Criteria 14-8
    Rejection Criteria 14-8
    Use Criteria 14-8
Written Examination, Evaluation and Scoring 7-2

(INTENTIONALLY LEFT BLANK)