INCH-POUND

DOE-STD-1090-2007
August 2007
Change Notice No. 1
December 2007
Superseding
DOE-STD-1090-2004
June 2004

DOE STANDARD

HOISTING AND RIGGING

U.S. Department of Energy
Washington, D.C. 20585

AREA SAFT

DISTRIBUTION STATEMENT A. Approved for public release; distribution is unlimited.

Chapter 4	Provide ASME attribution at introduction to the Table on Contents and on Figures 4-3,4 and Exhibits 1 & 2
Chapter 7	Provide ASME attribution at introduction to the Table on Contents and on Figures 7-1,2,3,4,5 and Table 7-1
Chapter 8	Provide ASME attribution at introduction to the Table on Contents and on Figures 8-1,2,3,4,5,6,7,8,9 and Table 8-1
Chapter 9	Provide ASME attribution at introduction to the Table on Contents and on Figures 9-1,2,3,4,5,6 and Table 9-2
Chapter 11	Provide ASME attribution at introduction to the Table on Contents and on Figures 11-10,15 and Tables 11-10,11,14,15,16
Chapter 12	Provide ASME attribution at introduction to the Table on Contents and on Figures 12-2,3,4,5,6,7,8,10,12,13
Chapter 13	Provide ASME attribution at introduction to the Table on Contents and on Table 13-1
Chapter 14	Provide ASME attribution at introduction to the Table on Contents and on Figures 14-1,2,3,5,6,7,8
Chapter 16	Provide ASME attribution at introduction to the Table on Contents and on Figure 16-1

CONTENTS

HISTORY AND BACKGROUND

ACKNOWLEDGMENT

INTRODUCTION

CHAPTER 1 TERMINOLOGY AND DEFINITIONS 1-1

CHAPTER 2 CRITICAL LIFTS 2-1

2.1 CRITICAL-LIFT DETERMINATION 2-1

2.2 CRITIAL-LIFT REQUIREMENTS 2-2

CHAPTER 3 PREENGINEERED PRODUCTION LIFTS 3-1

3.1 PRENGINEERED PRODUCTION LIFT DETERMINATION 3-1

3.2 LIFTING FIXTURES 3-2
3.3.1 Design 3-2
3.3.2 Fabrication 3-2
3.3.3 Inspection and Testing 3-2
3.3.4 Storage, Maintenance, and Control 3-2
3.3.5 Modification and Repair 3-3

3.3 PROCEDURES 3-4
3.4.1 Content 3-4
3.4.2 Development 3-4
3.4.3 Preparation and Revision 3-4
3.4.4 Approval 3-5
3.4.5 Review 3-5
3.4.6 Use 3-5

3.4 DESIGNATED LEADER 3-6

3.5 TRAINING 3-7
3.6.1 Equipment Operation 3-7
3.6.2 Procedure 3-7

CHAPTER 4 LIFTING PERSONNEL 4-1

4.1 GENERAL 4-1
4.1.1 Personnel Lifting Evaluation 4-1
4.1.2 Designated Leader 4-1
4.1.3 Trial Lift 4-2
4.1.4 Lifting Operations 4-2

4.2 MOBILE CRANES 4-5

4.3 OVERHEAD CRANES 4-6

4.4 PERSONNEL LIFT PLATFORM 4-7
4.4.1 Platform Design and Construction 4-7
4.4.2 Platform Suspension System 4-7

4.5 INSPECTIONS 4-9
4.5.1 Frequent Inspection 4-9
4.5.2 Periodic Inspection 4-9

4.6 TESTING 4-10
4.6.1 Platform Manufacturer Test 4-10
4.6.2 Rated Load Test 4-10
4.6.3 Hoisting Equipment 4-10

4.7 LIFTING PERSONNEL NEAR ELECTRICAL POWER LINES 4-11
4.7.1 General 4-11
4.7.2 Condition A 4-11
4.7.3 Condition B 4-11
4.7.4 Condition C 4-12

Exhibit I Personnel Lift Platform Pre-Lift Inspection 4-15
Exhibit II Personnel Lifting Planning and Authorization Form 4-16

CHAPTER 5 HOSTILE ENVIRONMENTS

5.1 GENERAL 5-1

5.2 HOSTILE ENVIRONMENT PLAN 5-2
5.2.1 Marking and Posting 5-2
5.2.2 Inspection and Testing 5-2

Exhibit I Hostile Environment Plan 5-3

CHAPTER 6 PERSONNEL QUALIFICATION AND TRAINING

6.1 GENERAL 6-1

6.2 QUALIFICATIONS 6-2
6.2.1 General 6-2
6.2.2 Operators of Cab-Operated and Pulpit-Operated 6-2
6.2.3 Operators of Mobile Cranes 6-2
6.2.4 Operators of Truck Mounted Cranes – Capacity 1 Ton or Less 6-4
6.2.5 Operators of Floor-Operated Cranes 6-4
6.2.6 Operators of Forklift Trucks 6-4
6.2.7 Operators of Remote Operated Cranes 6-4
6.2.8 Riggers 6-4
6.2.9 Person-In-Charge (PIC) 6-4
6.2.10 Designated Leader 6-5
6.2.11 Inspectors 6-5
6.2.12 Instructors 6-5
6.2.13 First-Line Supervisors 6-5
6.2.14 Maintenance Personnel 6-5

6.3 TRAINING 6-7
6.3.1 General 6-7
6.3.2 Cab-Operated, Pulpit-Operated, and Floor-Operated Cranes 6-7
6.3.3 Mobile Crane Operators 6-8
6.3.4 Operators of Truck Mounted Cranes – Capacity 1 Ton or Less 6-8
6.3.5 Forklift Truck Operators 6-8
6.3.6 Riggers 6-10
6.3.7 Inspectors 6-10
6.3.8 Instructors 6-11
6.3.9 Maintenance Personnel 6-11

6.4 REQUALIFICATION 6-12

6.5 RECORDS 6-13

CHAPTER 7 OVERHEAD AND GANTRY CRANES 7-1

7.1 GENERAL 7-1
7.1.1 Operator Training/Qualification 7-1
7.1.2 Rated-Load marking 7-1
7.1.3 Modification 7-1
7.1.4 Egress 7-1
7.1.5 Hoist Brakes 7-1
7.1.6 Power Shutoff 7-1
7.1.7 Hoist-Limit Switch 7-5
7.1.8 Load Limits 7-5
7.1.9 Maintenance History 7-5

7.2 INSPECTIONS 7-6
7.2.1 General 7-6
7.2.2 Crane Service 7-6
7.2.3 Initial Inspection 7-6
7.2.4 Daily Preoperational Check 7-6
7.2.5 Monthly Rope, Chain and Hook Inspection 7-6
7.2.6 Frequent Inspection 7-7
7.2.7 Periodic Inspection 7-7
7.2.7.1 Cranes 7-7
7.2.7.2 Wire Rope 7-8
7.2.7.3 Chain (Welded Link) 7-8
7.2.7.4 Chain (Roller) 7-9
7.2.8 Cranes Not in Regular Service 7-11

7.3 TESTING 7-12
7.3.1 Operational Tests 7-12
7.3.2 Rated Load Test 7-12

7.4 MAINTENANCE 7-14
7.4.1 Operating Equipment 7-14
7.4.2 Wire-Rope Maintenance 7-14

7.5 OPERATION 7-15
7.5.1 Conduct of Operator 7-15
7.5.2 Hoist-Limit Switch/Device 7-15
7.5.3 Standard Hand Signals 7-16
7.5.4 Identification of Signalers 7-16
7.5.5 Size of Load 7-16
7.5.6 Attaching the Load 7-16
7.5.7 Moving the Load 7-16
7.5.8 Ordinary Lifts 7-18
7.5.9 Planned Engineered Lifts 7-18
7.5.10 Critical Lifts 7-19

Exhibit I Bridge, Wall, Gantry Crane Load Test 7-22
Exhibit II Overhead Crane Pre-Operational Checklist 7-26
Exhibit III Overhead Crane Periodic Inspection Report (Mechanical) 7-28
Exhibit IV Overhead Crane Periodic Inspection Report (Electrical) 7-30

CHAPTER 8 HOISTS 8-1

8.1 GENERAL 8-1
8.1.1 Operator Training/Qualification 8-4
8.1.2 Marking 8-4
8.1.3 Warning Labels 8-4

8.1.3.1 Electric- or Air-Powered Hoists 8-4
8.1.3.2 Hand-Chain-Operated or Manual-Lever-Operated Hoists 8-4
8.1.4 Design Standards 8-5
8.1.5 Design Factors 8-5
8.1.6 Load-Braking/Load-Controlling Mechanisms 8-5
8.1.6.1 Electric-Powered Hoists 8-5
8.1.6.2 Air-Powered Hoists 8-5
8.1.6.3 Hand-Chain-Operated Hoists 8-6
8.1.6.4 Manual-Lever-Operated Hoists 8-6
8.1.7 Wire Rope 8-6
8.1.8 Load Chain 8-6
8.1.8.1 Electric-Powered, Air-Powered, and Manual-Lever-Operated Hoists 8-6
8.1.8.2 Hand-Chain-Operated Hoists 8-6
8.1.9 Web Strap 8-7
8.1.10 Overtravel Protection 8-7
8.1.10.1 Travel Warning Devices 8-7
8.1.10.2 Lower-Limit Switches/Devices 8-7
8.1.11 Travel Warning Devices 8-7
8.1.12 Support 8-7
8.1.13 Location 8-7
8.1.14 Load Rating 8-7

8.2 INSPECTIONS 8-8
8.2.1 Hoist Service 8-8
8.2.2 Initial Inspection 8-8
8.2.3 Daily Inspection 8-8
8.2.4 Frequent Inspection 8-8
8.2.5 Periodic Inspection 8-8
8.2.5.1 Hoists 8-9
8.2.5.2 Wire Rope 8-9
8.2.5.3 Welded-Link Chain 8-10
8.2.5.4 Roller Chain 8-11
8.2.5.5 Synthetic-Web Strap 8-12
8.2.6 Hoists Not in Regular Service 8-12

8.3 TESTING 8-13
8.3.1 Operational Tests 8-13
8.3.1.1 Electric- or Air-Powered Hoists 8-13
8.3.1.2 Hand-Chain-Operated Hoists 8-13
8.3.1.3 Manual-Lever-Operated Hoists 8-13
8.3.2 Proof-Load Test 8-13
8.3.2.1 Electric- or Air-Powered Hoists 8-13
8.3.2.2 Hand-Chain-Operated or Manual-Lever-Operated Hoists 8-13

8.4 MAINTENANCE 8-16

8.5 OPERATION 8-17
8.5.1 Conduct of Operator 8-17
8.5.2 Size of Load 8-17
8.5.3 Attaching the Load 8-17
8.5.4 Moving the Load 8-17
8.5.5 Hoist-Limit Switch 8-18
8.5.6 Ordinary Lifts 8-18
8.5.7 Planned Engineered Lifts 8-19
8.5.8 Critical Lifts 8-19

Exhibit I Hoist Load Test and Inspection 8-24
Exhibit II Underhung Hoist Periodic Inspection Report 8-26

CHAPTER 9 MOBILE CRANES 9-1

9.1 GENERAL 9-1
9.1.1 Operator Training/Qualification 9-1
9.1.2 Load Limits 9-1
9.1.3 Load Rating Chart 9-1
9.1.4 Load Hoist Brakes 9-6
9.1.5 Power-Controlled Lowering 9-6
9.1.6 Booms 9-6
9.1.7 Counterweight 9-6
9.1.8 Rerating 9-6
9.1.9 Maintenance History 9-6
9.1.10 Design Standards 9-6

9.2 INSPECTIONS 9-7
9.2.1 General 9-7
9.2.2 Initial Inspection 9-7
9.2.3 Preoperational Check 9-7
9.2.4 Monthly Inspection 9-7
9.2.5 Frequent Inspection 9-7
9.2.6 Periodic Inspection 9-8
9.2.6.1 Cranes 9-8
9.2.6.2 Hydraulic and Pneumatic Hose, Fittings, and Tubing 9-9
9.2.6.3 Hydraulic and Pneumatic Pumps and Motors 9-9
9.2.6.4 Hydraulic and Pneumatic Valves 9-9
9.2.6.5 Hydraulic and Pneumatic Cylinders 9-9
9.2.6.6 Hydraulic Filters 9-9
9.2.6.7 Wire Rope 9-9
9.2.7 Load Hoods/Load Blocks 9-11
9.2.8 Cranes Not in Regular Use 9-11

9.3 TESTING 9-12

9.3.1 Operational Tests 9-12
9.3.2 Rated Load Test 9-12

9.4 MAINTENANCE 9-13
9.4.1 Preventive Maintenance 9-13
9.4.2 Maintenance Procedures 9-13
9.4.3 Wire-Rope Maintenance 9-13

9.5 OPERATION 9-15
9.5.1 Conduct of Operator 9-15
9.5.1.1 Traveling the Machine 9-16
9.5.1.2 Making Adjustments or Repairs 9-16
9.5.1.3 Ensuring Stability 9-17
9.5.1.4 Further Safety Considerations 9-18
9.5.2 Operating Near Power Lines and Transmitter Towers 9-18
9.5.2.1 Crane Operations De-energized and Grounded Electrical Power Lines 9-19
9.5.2.2 Power Lines Energized, Crane Operating Less Than Erected/Fully Extended Boom Length Away From Prohibited Zone 9-19
9.5.2.3 Crane Operations are Within the Prohibited Zone and the Power Lines are Energized 9-22
9.5.2.4 Crane in Transit with no Load and Boom Lowered 9-22
9.5.2.5 Crane Operations Near Transmitter Towers 9-22
9.5.3 Hoist-Limit Switch 9-22
9.5.4 Standard Hand Signals 9-25
9.5.5 Identification of Signalers 9-25
9.5.6 Size of Load 9-25
9.5.7 Attaching the Load 9-25
9.5.8 Moving the Load 9-25
9.5.9 Ordinary Lifts 9-29
9.5.10 Critical Lifts 9-30

Exhibit I Mobile Crane Load Test 9-33
Exhibit II Mobile Crane Daily Pre-Operational Check 9-37
Exhibit III Mobile Crane Frequent Inspection Report 9-41
Exhibit IV Mobile Crane Periodic Inspection Report 9-43

CHAPTER 10 FORKLIFT TRUCKS 10-1

10.1 GENERAL 10-1
10.1.1 Operator Training/Qualification 10-1
10.1.2 Rated Capacity 10-1
10.1.3 Nameplate(s) and Markings 10-1
10.1.3.1 Fork Arm Data 10-1

10.1.4 Attachments 10-1
10.1.5 Modifications 10-2
10.1.6 Warning Devices 10-2
10.1.7 Overhead Guards 10-2
10.1.8 Fire Hazard Areas 10-2
10.1.9 Work Atmosphere 10-2

10.2 TYPE DESIGNATIONS AND AREAS OF USE 10-10
10.2.1 Type Designation 10-10
10.2.1.1 Nonhazardous Areas 10-10
10.2.1.2 Hazardous Areas 10-10
10.2.2 Specific Areas of Use 10-11

10.3 INSPECTIONS 10-14
10.3.1 Daily Preoperational Check 10-14
10.3.2 Initial Inspection of New and Rented Equipment 10-14
10.3.3 Inspection and Maintenance 10-14
10.3.4 Forks 10-15
10.3.4.1 Fork Load Rating 10-15
10.3.4.2 Fork Inspections 10-15
10.3.4.3 Fork Repair 10-16
10.3.5 Battery Maintenance 10-16
10.3.6 History File 10-17

10.4 TESTING 10-18
10.4.1 Forklift Truck Load Test 10-18
10.4.2 Fork Load Test 10-18
10.4.3 Attachment Load Test 10-18

10.5 OPERATION 10-19
10.5.1 Conduct of Operator 10-19
10.5.1.1 General 10-19
10.5.1.2 Traveling 10-20
10.5.1.3 Loading 10.21
10.5.2 Lifting of Personnel 10-22
10.5.3 Standard Hand Signals 10-24
10.5.4 Ordinary Lifts 10-24
10.5.5 Critical Lifts 10-24
10.5.6 Equipment Qualifications 10.24

Exhibit I Operations Pre-Shift Inspection Form 10-29
Exhibit II Forklift Load Test and Inspection Form 10-31

CHAPTER 11 WIRE ROPE AND SLINGS 11-1

11.1 GENERAL 11-1

11.2 WIRE ROPE 11-4
11.2.1 Wire-Rope Lays 11-4
11.2.2 Wire-Rope Cores 11-4
11.2.3 Wire Rope for General Purposes 11-4
11.2.3.1 6 x 19 Classification 11-4
11.2.3.2 6 x 37 Classification 11-5
11.2.4 Wire-Rope Inspections 11-5
11.2.5 Wire-Rope Maintenance 11-5

11.3 SLINGS 11-8
11.3.1 General 11-8
11.3.1.1 Load Angle Factor 11-8
11.3.1.2 Safe Load 11-8
11.3.1.3 Design Factor 11-10
11.3.1.4 Sling Care 11-10
11.3.1.5 Sling Storage 11-10
11.3.1.6 Inspections 11-10
11.3.1.7 Sling Periodic Inspection Records 11-10
11.3.2 Wire-Rope Slings 11-10
11.3.2.1 Removal from Service Criteria 11-20
11.3.2.2 Proof-Testing 11-20
11.3.2.3 Operation 11-20
11.3.2.4 Critical Lifts 11-23
11.3.3 Alloy Steel-Chain Slings 11-24
11.3.3.1 Removal from Service Criteria 11-25
11.3.3.2 Annual Inspections 11-25
11.3.3.3 Proof-Testing 11-26
11.3.3.4 Operation 11-28
11.3.3.5 Critical Lifts 11-29
11.3.4 Metal-Mesh Slings 11-29
11.3.4.1 Removal from Service Criteria 11-32
11.3.4.2 Proof-Testing 11-32
11.3.4.3 Operation 11-32
11.3.4.4 Critical Lifts 11-33
11.3.5 Synthetic-Web Slings 11-33
11.3.5.1 Removal from Service Criteria 11-36
11.3.5.2 Proof-Testing 11-36
11.3.5.3 Operation 11-40
11.3.5.4 Critical Lifts 11-40
11.3.6 Synthetic Roundslings 11-41
11.3.6.1 Removal from Service Criteria 11-41
11.3.6.2 Proof-Testing 11-42
11.3.6.3 Operation 11-42
11.3.6.4 Critical Lifts 11-43

CHAPTER 12 RIGGING ACCESSORIES 12-1

12.1 GENERAL 12-1
12.1.1 Good and Bad Rigging Practices 12-1

12.2 RIGGING HOOKS 12-5
12.2.1 Design 12-5
12.2.2 Marking 12-5
12.2.3 Construction 12-5
12.2.4 Load Limits 12-5
12.2.5 Inspections 12-5
12.2.6 Testing12-6
12.2.7 Maintenance 12-6
12.2.8 Operation 12-6

12.3 SHACKLES 12-7
12.3.1 General 12-7
12.3.2 Effects of Environment 12-7
12.3.3 Training 12-7
12.3.4 Inspections 12-7
12.3.5 Removal Criteria 12-8
12.3.6 Repairs 12-8
12.3.7 Critical Lifts 12-8

12.4 EYEBOLTS 12-11
12.4.1 General 12-11
12.4.2 Effects of Environment 12-11
12.4.3 Training 12-11
12.4.4 Inspections 12-11
12.4.5 Removal Criteria 12-12
12.4.6 Repairs 12-12
12.4.7 Critical Lifts 12-12

12.5 EYE NUTS 12-14
12.5.1 General 12-14
12.5.2 Effects of Environment 12-14
12.5.3 Training 12-14
12.5.4 Inspections 12-14
12.5.5 Removal Criteria 12-15
12.5.6 Repairs 12-15
12.5.7 Critical Lifts 12-15

12.6 TURNBUCKLES 12-16
12.6.1 General 12-16

12.6.2 Operating Practices 12-16
12.6.3 Effects of Environment 12-16
12.6.4 Training 12-16
12.6.5 Inspections 12-16
12.6.6 Removal Criteria 12-17
12.6.7 Repairs 12-17
12.6.8 Critical Lifts 12-17

12.7 LINKS, RINGS, AND SWIVELS 12-19
12.7.1 General 12-19
12.7.2 Operating Practices 12-19
12.7.3 Effects of Environment 12-19
12.7.4 Training 12-19
12.7.5 Inspections 12-19
12.7.6 Removal Criteria 12-20
12.7.7 Repairs 12-20
12.7.8 Critical Lifts 12-20

12.8 SWIVEL HOIST RINGS 12-21
12.8.1 General 12-21
12.8.2 Effects of Environment 12-21
12.8.3 Training 12-21
12.8.4 Inspections 12-21
12.8.5 Removal Criteria 12-22
12.8.6 Repairs 12-22
12.8.7 Critical Lifts 12-22

12.9 LOAD-INDICATING DEVICES 12-25
12.9.1 General 12-25
12.9.2 Critical Lifts 12-25

12.10 PRECISION LOAD POSITIONERS 12-26
12.10.1 General 12-26
12.10.2 Critical Lifts 12-26

12.11 COMPRESSION HARDWARE 12-27
12.11.1 General 12-27
12.11.2 Assembly – Wire Rope Clips 12-27
12.11.3 Assembly – Wedge Sockets 12.27
12.11.4 Effects of Environment 12-28
12.11.5 Training 12-28
12.11.6 Inspections 12-28
12.11.7 Removal Criteria 12-28
12.11.8 Repairs 12-29
12.11.9 Critical Lifts 12-29

CHAPTER 13 LOAD HOOKS 13-1

13.1 GENERAL 13-1
13.1.1 Marking 13-1
13.1.2 Attachments 13-1
13.1.3 Load Limits 13-1
13.1.4 Hook Standards 13-1

13.2 INSPECTIONS 13-2
13.2.1 Hook Service 13-2
13.2.2 Initial Inspection 13-2
13.2.3 Daily Inspection 13-2
13.2.4 Frequent Inspection 13-2
13.2.5 Periodic Inspection 13-2

13.3 TESTING 13-4

13.4 NONDESTRUCTIVE TESTING (NDT) 13-6
13.4.1 NDT Requirements 13-6
13.4.2 NDT Records 13-6
13.4.3 NDT Methods 13-6
13.4.4 Acceptance Criteria 13-6
13.4.5 Discontinuity Removal 13-6

13.5 MAINTENANCE 13-8

13.6 OPERATION 13-9

Exhibit I Exhibit Hood Periodic Inspection Report 13-11

CHAPTER 14 BELOW-THE-HOOK LIFTING DEVICES 14-1

14.1 GENERAL 14-1

14.2 STRUCTURAL AND MECHANICAL LIFTING DEVICES 14-2
14.2.1 Design/Fabrication 14-2
14.2.2 Marking 14-2
14.2.3 Modification/Rerating 14-2
14.2.4 Guarding 14-2
14.2.5 Inspections 14-2
14.2.5.1 Initial Inspection 14-2
14.2.5.2 Frequent Inspection 14-2
14.2.5.3 Periodic Inspection 14-3
14.2.6 Testing 14-3
14.2.6.1 Operational Test 14-3
14.2.6.2 Rated Load Test 14-7

14.2.7 Maintenance 14-7
14.2.8 Training/Qualification 14-7
14.2.9 Operation 14-7
14.2.10 Critical Lifts 14-8

14.3 VACUUM LIFTING DEVICES 14-9
14.3.1 Design/Fabrication 14-9
14.3.2 Marking 14-9
14.3.3 Installation 14-11
14.3.4 Inspections 14-11
14.3.4.1 Initial Inspection 14-11
14.3.4.2 Frequent Inspection 14-11
14.3.4.3 Periodic Inspection 14-11
14.3.5 Testing 14-12
14.3.5.1 Operational Test 14-12
14.3.5.2 Rated Load Test 14-12
14.3.6 Maintenance 14-12
14.3.7 Training/Qualification 14-12
14.3.8 Operation 14-13
14.3.9 Critical Lifts 14-14

14.4 MAGNETS, CLOSE-PROXIMITY-OPERATED 14-15
14.4.1 Design/Fabrication 14-15
14.4.2 Marking 14-15
14.4.2.1 Rated Load (Capacity) 14-17
14.4.2.2 Controls 14-17
14.4.3 Installation 14-17
14.4.4 Inspections 14-17
14.4.4.1 Initial Inspection 14-17
14.4.4.2 Frequent Inspection 14-17
14.4.4.3 Periodic Inspection 14-17
14.4.5 Testing 14-18
14.4.5.1 Operational Test 14-18
14.4.5.2 Rated Load Test 14-18
14.4.6 Maintenance 14-18
14.4.7 Training/Qualification 14-19
14.4.8 Operation 14-19
14.4.8.1 External-Powered Electromagnets 14-20
14.4.8.2 Battery-Operated Electromagnets 14-20
14.4.8.3 Electrically Controlled Permanent Magnets 14-20
14.4.8.4 Manually Controlled Permanent Magnets 14-20
14.4.9 Critical Lifts 14-20

14.5 MAGNETS, REMOTE-OPERATED 14-21
14.5.1 Design/Fabrication 14-21
14.5.2 Marking 14-21

14.5.3 Installation 14-21
14.5.4 Inspections 14-21
14.5.4.1 Initial Inspection 14-21
14.5.4.2 Frequent Inspection 14-21
14.5.4.3 Periodic Inspection 14-21
14.5.5 Testing 14-23
14.5.5.1 Operational Test 14-23
14.5.6 Maintenance 14-23
14.5.7 Training/Qualification 14-23
14.5.8 Operation 14-24
14.5.9 Critical Lifts 14-24

Exhibit I Lifting Bars and Spreaders Load Test and Inspection 14-27

CHAPTER 15 CONSTRUCTION HOISTING AND RIGGING EQUIPMENT REQUIREMENTS 15-1

15.1 GENERAL 15-1

15.2 PERSONNEL QUALIFICATIONS 15-2
15.2.1 Qualified Operators of Mobile Cranes 15-2
15.2.2 Qualified Operators of Forklift Trucks 15-3
15.2.3 Qualified Riggers 15-4
15.2.4 Person-in-Charge (PIC) 15-4
15.2.5 Designated Leader 15-5
15.2.6 Inspector 15-5
15.2.7 Maintenance 15-5

15.3 INSPECTION AND TESTING 15-6

15.4 OPERATION 15-7
15.4.1 General 15-7
15.4.2 Wire Rope Slings 15-7

15.5 STEEL ERECTION 15-8
15.5.1 General 15-8
15.5.2 Definitions 15-8
15.5.3 Pre-Shift Inspection of Cranes 15-8
15.5.4 Qualified Rigger 15-9
15.5.5 Lifting Personnel 15-9
15.5.6 Safety Latches 15-9
15.5.7 Working Under Loads 15-9
15.5.8 Multiple Load Lifts 15-9

CHAPTER 16 MISCELLANEOUS LIFTING DEVICES 16-1

16.1 GENERAL 16-1
16.1.1 Operator Training/Qualifications 16-1
16.1.2 Rated-Load Markings, Safety Markings and Operating Instructions . 16-1
16.1.3 Modifications 16-1
16.1.4 Load Limits 16-2
16.1.5 Operating Controls 16-2
16.1.6 Load Hook 16-2
16.1.7 Wire Rope 16-2
16.1.7 Assembly 16-2

16.2 INSPECTIONS 16-5
16.2.1 General 16-5
16.2.2 Initial Inspection 16-5
16.2.3 Daily Preoperational Inspection 16-5
16.2.4 Periodic Inspection 16-5

16.3 TESTING 16-7
16.3.1 Operational Test 16-7
16.3.2 Rated Load Test 16-7

16.4 MAINTENANCE 16-8

16.5 OPERATION 16-9
16.5.1 Conduct of Operator 16-9

CHAPTER 17 ..... REFERENCES

APPENDIX A ..... PROCUREMENT GUIDELINES

History and Background

In 1975, cognizant safety and health personnel at the U.S. Department of Energy (DOE) Headquarters (HQ) met to discuss the need for a DOE hoisting and rigging manual. At that meeting, existing, applicable hoisting and rigging codes, standards, and regulations, such as the Occupational Safety and Health Administration (OSHA) 29 CFR 1910, the American National Standards Institute (ANSI) B-30 series, and others, were reviewed in detail. Subsequently, it was determined that these documents, while adequate as minimum general industry standards, did not contain the detail necessary to adequately accomplish the extremely complex, critical, and hazardous hoisting and rigging operations being performed at DOE sites, in all probability, at other government agency and private sectors throughout the country. Because of the high potential for accidents that could result in significant property loss or serious personnel injury or death, it was decided that a DOE hoisting and rigging manual was not only desirable but absolutely necessary.

Preliminary work on the manual was initiated in 1976. The manual that was developed at that time incorporated the minimum requirements of OSHA, ANSI, and similar documents and also included additional more stringent requirements deemed necessary to adequately control hoisting and rigging work processes throughout DOE. Each phase of the manual was then critically reviewed by DOE and contractor personnel. A final draft was completed in 1978 and implemented on a trial basis.

In June 1980, a decision was made to formally issue and distribute the manual under controlled distribution, an arrangement where the manual must be specifically requested from the originating source; however, once requested, updates are automatically received through an actively maintained distribution list. In 1982, the manual was included as a reference standard in DOE 5480.4, "Environmental Protection, Safety, and Health Protection Standards." Updates and improvements have been made over the years on an approximately annual basis. Revisions have occurred in 1984, 1985, 1986, 1988, 1989, 1993, 1995, 1996, 1999, 2001, 2004 and 2007 to clarify intent, comply with OSHA and ANSI B-30 changes, improve format, strengthen wording, delete needless redundancy, eliminate obsolescence, and the like. Prior to inclusion in the manual, all changes must be approved by the DOE Hoisting and Rigging Committee, which meets annually, and by the Headquarters Office of Worker Safety and Health Policy, which has safety responsibility for DOE hoisting and rigging. The Committee is also a major source for input into the manual, particularly concerning those areas that are not defined or are only generally defined by Federal and national standards, such as training and qualification, and those concerning the DOE's unique operational environment, such as hoisting and rigging over nuclear reactors and other locations containing critical equipment. In the years that minor revisions occur, only the changed pages, usually 8 to 10, are sent to individuals on the distribution list. After two to three such supplements, the manual is reissued in its entirety, which incorporates the previous supplements plus the most recent unpublished changes approved by the committee. An example is the complete revision issued in 1993 followed by another complete revision in 1996, 1999, 2001and 2004 without any intervening supplements. In this case, the supplements were omitted because of the numerous improvements incorporated within the very short time period.

The reissued June 1995 edition marked a change in classification. The DOE Office of Scientific and Technical Information (OSTI) reclassified the manual as a handbook and it was issued as DOE Hoisting and Rigging Handbook (DOE-HDBK-1090-95). After further review, OSTI has reclassified the handbook as a DOE Technical Standard and the September 1996 edition was issued as DOE STANDARD HOISTING AND RIGGING (Formerly Hoisting and Rigging Manual) DOE-STD-1090-96 (Rev-1). Additional revisions issued are DOE-STD-1090-99, DOE-STD-1090-2001, DOE-STD-1090-2004, and DOE-STD-1090-2007..

While *The Hoisting and Rigging Standard* is in itself a best practice document, much of its content, such as the OSHA and the therein prescribed ANSI/ASME and and Crane Manufacturers Association of America standards are mandatory within DOE. In addition, many DOE organizations have, on their own initiative, adopted the standard as mandatory to ensure safe and proper hoisting and rigging operations at their facilities.

Acknowledgment

The Department of Energy (DOE) acknowledges the many organizations whose documents provided important source material for the standard. They include:

American Society of Mechanical Engineers

ASME B30.2, “Overhead and Gantry Cranes (Top Running Bridge, Multiple Girder)”

ASME B30.5, “Crawler, Locomotive, and Truck Cranes”

ASME B30.9, “Slings”

ASME B30.10, “Hooks”

ASME B30.16, “Overhead Hoists (Underhung)”

ASME B30.17, “Overhead and Gantry Cranes (Top Running Bridge, Single Girder Underhung Hoist)

ASME B30.20, “Below-the-Hook Lifting Devices”

ASME B30.21, “Manually Lever Operated Hoist”

ASME B30.22, “Articulating Boom Cranes”

ASME B30.23, “Personnel Lifting Systems”

ASME B30.26, “Rigging Hardware’

ANSI/ITSDF B56.1, “Low Lift and High Lift Trucks”

ANSI/ITSDF B56.6, “Rough Terrain Forklift Trucks”

ASME PALD, “Portable Automotive Lifting Devices”

Construction Safety Association (CSA) of Ontario

"The Rigging Handbook"

Society of Automotive Engineers, Inc. (SAE)

SAE J1028, "Mobile Crane Working Area Definitions”

Permission to reprint specific figures and illustrations was obtained from CSA and SAE.
Applicable sections of 29 CFR 1910, "Occupational Safety and Health Standards for General Industry," and 29 CFR 1926, "Occupational Safety and Health Regulations for Construction," have been

paraphrased or reproduced verbatim throughout. The contribution of DOE's Hoisting and Rigging Committee, which has met annually since 1980, is also recognized. Representing many DOE sites, this group has provided their advice as to the tone and content of this standard. Without their time and talent, which has been provided gratuitously, there would be no standard.

The standard is a safety, not a design, document intended for use by safety professionals and managers. In keeping with this philosophy, only those portions of standards and regulations dealing with safety, particularly those deemed most relevant to DOE operations, have been included. In that the target audience for this document is safety professionals and managers and not hoisting and rigging equipment designers, the design references cited within Chapter 17 of this Standard (References) should be consulted for specific design, fabrication, and other performance criteria. While it is convenient to have focused, in-depth hoisting and rigging safety information concentrated into one document, the significance of the above source material is acknowledged, and readers are strongly encouraged to review each of them so as to have a full description of the subject area covered.

Introduction

The U.S. Department of Energy (DOE) *Hoisting and Rigging Standard* is intended to be used by supervisors, line managers, safety personnel, equipment operators, and any other personnel responsible for safety of hoisting and rigging operations at DOE sites. The standard quotes verbatim or paraphrases (with minor editorial changes for consistency) the requirements of the U.S. Occupational Safety and Health Administration (OSHA) and the therein refenced standards of the American National Standards Institute (ANSI). It also encompasses, under one cover, applicable hoisting and rigging codes, standards, and regulations, eliminating the need to maintain extensive (and often incomplete) libraries of hoisting and rigging standards throughout DOE.

When formally invoked by contract, the use of the imperative voice (as in "Never use discarded load chain for slings") or the word "shall" within this standard connotes a mandatory action, whereas use of the word "should" denotes a recommended action.

From chapter to chapter, the reader may notice what appears to be excessive repetition. Such repetition, however, is by design, enabling the use of each chapter, if needed or convenient, as a stand-alone document.

The standard occasionally goes beyond the minimum general industry standards established by OSHA and ANSI; and also delineates the more stringent provisions necessary to accomplish the extremely complex, diversified, critical, and oftentimes hazardous hoisting and rigging work found within the DOE complex. In doing so, it addresses the following items that are not covered in detail in the general industry standards:

1. Management responsibility and accountability
2. Operator/inspector training and qualification requirements
3. Definition of critical lifts and the additional requirements for making them
4. The need and responsibilities of a person-in-charge for critical lifts
5. The need and responsibilities of a designated leader for ordinary lifts
6. The definition and special requirements for preengineered production lifts
7. Special requirements for the testing, inspection, and maintenance of hoisting equipment in hostile environments
8. Nondestructive testing/nondestructive examination requirements for such items as hooks, welds, and spreader bars
9. Special requirements for inspection and load-testing of hoisting and rigging equipment/accessories
10. Hook latch requirements for cranes, slings, and rigging accessories
11. Design standards for such equipment as cranes, forklifts, and hooks

12. Operating practices for hoisting and rigging operations

13. Rigging information and load tables

14. Good and bad rigging practices.

Because the possibility of serious accidents resulting in personnel injury or death or significant property damage exists whenever hoisting and rigging take place, the requirements for these operations must be clearly defined and precautions ensured, including proper preplanning, extreme care, attention to detail, teamwork on the part of trained operators/riggers, and the use of equipment that is reliable, properly designed, inspected, and maintained. Although not mandatory at all DOE sites and locations, this standard has been used for many years by DOE and its contractors as a valuable resource for conducting hoisting and rigging safely and efficiently. It is felt that the full implementation of the provisions of this standard will dramatically strengthen hoisting and rigging programs throughout the DOE complex and will significantly decrease the probability of serious accidents resulting in personnel injury or death or severe property damage.

It should be noted that not all hoisting and rigging equipment or operational methods could be covered comprehensively by this standard. Hoisting and rigging equipment fabricated onsite or operated in manner not envisioned by this Standard shall be designed, constructed, operated, inspected and tested in accordance with the design engineer of record and applicable design standards. This Standard does not address elevators, drilling rigs, or the lifting loads with construction equipment not normally intended for lifting purposes (e.g., excavators, payloaders).

Also, this Standard does not repeat other DOE nuclear regulations, orders or standards (e.g., 10 CFR 830, "Nuclear Safety Management") with respect to safety analysis, technical safety requirements, or safety classifications of hoisting equipment. The applicable regulatory documents should be consulted to ensure conformance with these requirements during hoisting and rigging activities.

To propose improvements to this standard, please provide suggested text changes as well as supporting technical documentation to:

Mr. Patrick F. Finn, PE
U.S. Department of Energy
HS-11, 270 Corporate Square Building
1000 Independence Avenue, SW
Washington, DC 20585-0270

CHAPTER 1
TERMINOLOGY AND DEFINITIONS

The following are specialized terms commonly used when discussing hoisting and rigging operations. Many may not be used in this standard, but are included for general information. The terms are arranged in alphabetical order. Illustrations are included for clarity.

ABRASION: Surface wear.

ACCELERATION STRESS: Additional stress imposed due to increasing load velocity.

ALTERNATE LAY: Lay of wire rope in which the strands are alternately regular and lang lay.

ANSI: American National Standards Institute.

APPOINTED: Assigned specific responsibilities by the employer or the employer's representative.

AREA, METALLIC: Sum of the cross-sectional areas of individual wires in a wire rope or strand.

ATTACHMENT: A device other than conventional forks or load backrest extension, mounted permanently or removable on the elevating mechanism of a truck for handling the load. Popular types are fork extension clamps, rotating devices, side shifters, load stabilizers, rams and booms.

AUTHORIZED: Assigned by a duly constituted administrative or regulatory authority.

AUXILLARY HOIST: Supplemental hoisting unit of lighter capacity and usually higher speed than the main hoist.

BACK STAY: Guy used to support a boom or mast or that section of a main cable, as on a suspension bridge, or cableway, and the like, leading from the tower to the anchorage.

BAIL: A U-shaped member of a bucket, socket, or other fitting.

BASKET OR SOCKET: The conical portion of a socket into which a splayed rope end is inserted and secured with zinc.

BATTERY-ELECTRIC TRUCK: An electric truck in which the power source is a storage battery.

BECKET LOOP: A loop of small rope or a strand of rope fastened to the end of a large wire rope to facilitate installation.

BENDING STRESS: Stress on wires of a wire rope imposed by bending. This stress need not be added to direct load stresses. When sheaves and drums are of suitable size, bending stress does not affect the normal life of the wire rope.

BIRDCAGE: A colloquialism describing the appearance of a wire rope that is forced into compression. The outer strands form a "cage" and at times displace the core.

BIRDCAGING: The twisting of fiber or wire rope in an isolated area in the opposite direction of the rope lay, causing it to take on the appearance of a birdcage.

BOOM (Crane): A member hinged to the rotating superstructure and used for supporting the hoisting tackle.

BOOM LINE: A wire rope for supporting or operating the boom on derricks, cranes, draglines, shovels, and the like.

BRAKE: A device used for slowing or stopping motion by fiction or electromagnetic means.

BRAKE, DRAG: A brake that provides stopping force without external control.

BRAKE, HOLDING: A brake that sets automatically and that prevents motion when power is off.

BRAKE, PARKING: A device to prevent the movement of a stationary vehicle.

BRAKING, COUNTER TORQUE: A method of stopping motion in which the power to the

motor is reversed to develop torque in the opposite direction.

BRAKING, DYNAMIC: A method of controlling crane motor speeds when in the overhauling condition to provide a retarding force.

BRAKING, MECHANICAL: A method of slowing motion by friction.

BRAKING, REGENERATIVE: A form of dynamic braking in which the electrical energy generated is fed back into the power system.

BREAKING STRENGTH: The measured load required to break a wire rope or chain.

BRIDGE: The part of a crane, consisting of girders, walkways, railings, trucks, and drive mechanisms, that carries the trolley or trolleys.

BRIDGE TRAVEL: Horizontal travel of the crane parallel with runway rails.

BRIDLE SLING: A sling composed of multiple legs (branches), the top ends of which terminate in a fitting that latches onto the lifting hook.

BULL RING: The main large ring of a sling to which sling legs are attached.

BUMPER (BUFFER): An energy-absorbing device for reducing impact when a moving overhead crane or trolley reaches the end of its permitted travel, or when two moving cranes or trolleys come into contact.

CAB: The operator's compartment.

CABLE: A term loosely applied to wire ropes, wire strands, manila ropes, and electrical conductors.

CABLE-LAID WIRE ROPE: A type of wire rope consisting of several independent wire ropes laid into a single wire rope.

CABLE CROWD ROPE: A wire rope used to force the bucket of a power shovel into the material being handled.

CANTILEVER TRUCK: A self-loading counterbalanced or noncounterbalanced truck equipped with a cantilever load-engaging means, such as forks (see Figure 10-3).

CARRIAGE: A support structure for forks or attachments, generally roller-mounted, traveling vertically within the mast of a cantilever truck.

CENTER: A single wire or fiber in the center of a strand around which the wires are laid.

CENTER CONTROL: The position near the center of a truck cab from which the operator controls movement of the truck.

CHOKER ROPE: A short wire-rope sling used to form a slip noose around the object to be moved or lifted (see Figure 1-1).

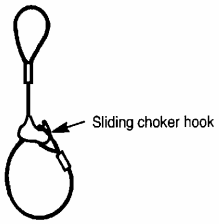

Figure 1-1. Choker Rope.

CIRCUMFERENCE: Measured perimeter of a circle circumscribing the wires of a strand or the strands of a wire rope.

CLAMP, STRAND: A fitting used to form a loop at the end of a length of strand; consists of two grooved plates and bolts.

CLEARANCE: The distance by which one object clears another, or the clear space between them.

CLEVIS: A U-shaped fitting with pins.

CLIP: A fitting used to clamp two parts of wire rope.

CLOSED SOCKET: A wire-rope fitting consisting of an integral becket and bail.

CLOSING LINE: Wire rope that closes a clamshell or orange-peel bucket and then operates as a hoisting rope.

COIL: Circular bundle of wire rope not packed on a reel.

COLLECTOR: Contacting device mounted on a bridge or trolley and used to collect current from the conductor system.

COME-ALONG: A portable, hand-operated device consisting of a housing, a length of chain or wire rope, two hooks, and a ratcheting lever, that is used for miscellaneous pulling.

CONDUCTOR: Wire, angles, bars, tees, or special sections mounted to transmit current to the collectors.

CONICAL DRUM: Grooved hoisting drum of varying diameter.

CONSTRUCTION (WIRE ROPE): Refers to the design of wire rope, including number of strands, number of wires per strand, and arrangement of wires in each strand.

CONTINUOUS BEND: Reeving of wire rope over sheaves and drums so that it bends in one direction (as opposed to reverse bend).

CONTROLLER: An operator's device for regulating the power delivered to a motor or other equipment.

CONTROLLER, SPRING RETURN: A controller that, when released, will return automatically to a neutral position.

CORE: The center member of a wire rope around which the strands are laid. It may be fiber, a wire strand, or an independent wire rope.

CORING LINE: Wire rope used to operate the coring tool for taking core samples during the drilling of a well.

CORROSION: Chemical decomposition by exposure to moisture, acids, alkalis, or other destructive agents.

CORRUGATED: A term used to describe the grooves of a sheave or drum when worn so as to show the impression of a wire rope.

COUNTERBALANCED TRUCK: A truck equipped with load-engaging means wherein, during normal transporting, all the load is external to the polygon formed by the wheel contacts (see Figure 10-3).

COVER WIRES: The outer layer of wires.

CRANE: A machine used for lifting and lowering a load vertically and moving it horizontally and that has a hoisting mechanism as an integral part of it.

CRANES, TYPES OF:

Automatic Crane: A crane that, when activated, operates through a preset cycle or cycles.

Cab-Operated Crane: A crane controlled by an operator in a cab located on the bridge or trolley.

Cantilever Gantry Crane: A gantry or semigantry crane in which the bridge girders or trusses extend transversely beyond the crane runway on one or both sides.

Floor-Operated Crane: A crane whose operation is controlled by use of a pendant in the hands of an operator on the floor or on an independent platform.

Gantry Crane: A crane similar to an overhead crane, except that the bridge for carrying the trolley or trolleys is rigidly supported on two or more legs running on fixed rails or other runway.

Jib Crane: A fixed crane with a vertical rotating member supported at the bottom (also at the top in some types) from which an arm extends to carry the hoist trolley. Jib cranes are most commonly mounted on a vertical column, supplied as part of the jib crane, or on existing structural members (e.g., a wall-mounted jib crane).

Mobile Crane: For the purposes of this chapter, mobile cranes are defined as wheel-mounted cranes, truck cranes, and crawler cranes.

- A **wheel-mounted** crane consists of a rotating structure with power plant, operating machinery, and boom, mounted on a base or platform equipped with axles and rubber-tired wheels for travel. The base is usually propelled by an engine in the superstructure, but it may be equipped with a separate engine controlled from the superstructure

- A **truck-mounted** crane consists of a rotating superstructure with power plant that operates machinery and boom, mounted on an automotive truck equipped with a power plant for travel. Commercial truck-mounted cranes are included in this category

- A **crawler crane** consists of a rotating superstructure with power plant, operating machinery and boom, mounted on a base equipped with crawler treads for travel.

Overhead Traveling Crane: A crane with a movable bridge carrying a movable or fixed hoisting mechanism and traveling on an overhead fixed-runway structure.

Power-Operated Crane: A crane whose mechanism is driven by electricity, air, hydraulics, or internal combustion.

Pulpit-Operated Crane: A crane operated from a fixed operator station that is not attached to the crane.

Remote-Operated Crane: A crane controlled by an operator not in a pulpit or cab attached to the crane, by any method other than pendant or rope control (e.g., radio-controlled crane).

Semigantry Crane: A gantry crane with one end of the bridge rigidly supported on one or more legs that run on a fixed rail or runway, the other end of the bridge being supported by a truck running on an elevated rail or runway.

Shop Crane: A Portable Automotive Lifting Device (PALD), self contained hydraulic and pneumatic-hydraulic crane characterized by a pair of laterally spaced legs, an upright mast, a pivoting boom with a boom extension and hook, and a hydraulic unit. The hydraulic unit moves the boom up and down at a pivot point for the purpose of raising, removing, transporting in the lowered position, and replacing automotive engines, transmissions and other components. Shop cranes have a capacity of 4 tons (8000 pounds) or less.

Wall-Mounted Crane: A crane having a jib, with or without a trolley, supported from a side wall or line of columns of a building. It is a traveling-type crane and operates on a runway attached to the side wall or line of columns.

Wall-Mounted Jib Crane: See Cranes, Types Of, Jib Crane.

CRITICAL DIAMETER: Diameter of the smallest bend for a given wire rope that permits the wires and strands to adjust themselves by relative movement while remaining in their normal positions.

CYLINDRICAL DRUM: Hoisting drum of uniform diameter.

DECELERATION STRESS: Additional stress imposed on a wire rope due to decreasing the load velocity.

DEFLECTION:

- Sag of a rope in a span, usually measured at midspan as the depth from a chord joining the tops of the two supports.

- Any deviation from a straight line.

DESIGN FACTOR: Ratio of ultimate strength to the design working stress.

DESIGNATED: Selected or assigned by the employer or the employer's representative as being qualified to perform specific duties.

DESIGNATED LEADER: An individual assigned responsibility for safe handling of ordinary lifts. The designated leader shall be present at the lift site during the entire lifting operation. If the lift is being made by only one person, that person assumes all responsibilities of the designated leader.

DIAMETER: Distance measured across the center of a circle circumscribing the wires of a strand or the strands of a wire rope.

DIESEL-ELECTRIC TRUCK: An electric truck in which the power source is a generator driven by a diesel engine.

DOCKBOARD: A portable or fixed device for spanning the gap or compensating for the difference in level between loading platforms and carriers.

DOG-LEG: Permanent short bend or kink in a wire rope caused by improper use.

DRAGLINE: Wire rope used to pull an excavating or drag bucket.

DRIVE: Motor, coupling, brake and gear case, or gear cases used to propel bridge, trolley, or hoist.

DRIVE GIRDER: A girder on which is mounted the bridge drive, cross shaft, walk, railing, and operator's cab.

DRUM: A cylindrical-flanged barrel of uniform (cylindrical drum) or tapering (conical drum) diameter on which a wire rope is wound for operation or storage. It may be smooth or grooved.

ELASTIC LIMIT: Limit of stress beyond which a permanent deformation takes place within the material. This limit is approximately 55-65 percent of breaking strength of steel-wire ropes.

ELECTRIC TRUCK: A truck in which the principal energy is transmitted from power source to motor(s) in the form of electricity.

END CONTROL: An operator-control position that is located at the end opposite the load end of the truck.

EQUALIZER: A device used to compensate for unequal length or stretch of a hoist rope.

EQUALIZING SLINGS: Slings composed of wire rope and equalizing fittings.

EQUALIZING THIMBLES: A special type of fitting used as a component part of some wire-rope slings.

EYE OR EYE SPLICE: A loop with or without a thimble formed in the end of a wire rope.

FAIL-SAFE: A provision designed to automatically stop or safely control any motion in which a malfunction could occur.

FATIGUE: The tendency of a material to break under repeated stress.

FIBER CENTERS: Cords or rope made of vegetable fiber used in the center of a strand.

FIBER CORES: Cords or rope made of vegetable fiber used in the core of a wire rope.

FIRST POINT: The first setting on the operator's controller that starts crane motion (slowly) in each direction.

FITTING: Any accessory used as an attachment for wire rope.

FLAG: Mark or marker on a rope to designate position of load.

FLAT ROPE: Wire rope made of parallel alternating right-lay and left-lay ropes sewn together by relatively soft wires.

FLATTENED STRAND ROPE: A wire rope with either oval or triangular strands that present a flattened rope surface.

FLEET ANGLE: Angle between the position of a rope at the extreme end wrap on a drum and a line drawn perpendicular to the axis of the drum through the center of the nearest fixed sheave.

FORKS: Horizontal tine-like projections, normally suspended from the carriage, used to engage and support loads.

FORK HEIGHT: The vertical distance from the floor to the load-carrying surface adjacent to the heel of the forks with the mast vertical, and in the case of reach trucks, with the forks extended.

FORKLIFT TRUCK: A high-lift self-loading truck equipped with load carriage and forks for transporting and tiering loads (see Figure 10-3).

GALVANIZE: To coat with zinc to protect against corrosion.

GALVANIZED ROPE: Rope made of galvanized wire.

GALVANIZED STRAND: Strand made of galvanized wire.

GALVANIZED WIRE: Wire coated with zinc.

GAS-ELECTRIC TRUCK: An electric truck in which the power source is a generator driven by an LP-gas or gasoline engine.

GROMMET: A seven-strand wire-rope sling made from one continuous length of strand or an endless synthetic-web sling.

GROOVED DRUM: Drum with grooved outer surface to accommodate and guide a rope.

GROOVES: Depressions in the outer surface of a sheave or drum for positioning and supporting a rope.

GUY LINE: Strand or rope, usually galvanized, for holding a structure in position.

HANDLING FIXTURE: A cradle, structure, shipping fixture, or container designed specifically to facilitate supporting, lifting or handling a component during fabrication, loading, shipping, storage, or installation.

HIGH-LIFT TRUCK: A self-loading truck equipped with an elevating mechanism designed to permit tiering. Popular types are high-lift platform trucks (see Figure 10-3).

HIGH-LIFT PLATFORM TRUCK: A self-loading truck equipped with an elevating mechanism intended primarily for transporting and tiering loaded skid platforms (see Figure 10-3).

HOIST: A device that applies a force for lifting or lowering.

HOIST, LEVER OPERATED: A lever-operated manual device used to lift, lower, or pull a load and to apply or release tension.

HOLDING LINE: Wire rope on a clamshell or orange-peel bucket that holds the bucket while the closing line is released to dump the load.

HOOK LOAD: The total live weight supported by the hook of a crane, derrick, or other hoisting equipment, including the load, slings, spreader bars, and other tackle not part of the load, but supported by the hook and required for the handling of the load.

IDLER: Sheave or roller used to guide or support a rope.

INDEPENDENT WIRE-ROPE CORE: Wire rope used as the core of a larger rope.

INNER WIRES: All wires of a strand except surface or cover wires.

INTERNAL-COMBUSTION ENGINE TRUCK: A truck in which the power source is a gas or diesel engine.

INTERNALLY LUBRICATED: Wire rope or strand having all wires coated with lubricant.

KINK: Permanent distortion of wires and strands resulting from sharp bends.

LAGGING: External wood covering on a reel of rope or a strand.

LANG-LAY ROPE: Wire rope in which the wires in the strands and the strands in the rope are laid in the same direction.

LAY LENGTH: The lengthwise distance on a wire rope in which a strand makes one complete turn around the rope's axis (see Figure 1-2).

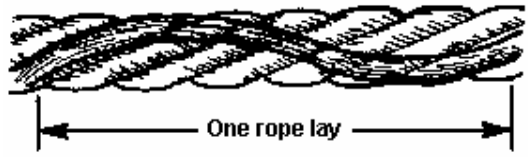

Figure 1-2. Rope Lay

Left Lay:

- **Strand:** Strand in which the cover wires are laid in a helix having a left-hand pitch, similar to a left-hand screw.
- **Rope:** Rope in which the strands are laid in a helix having a left-hand pitch, similar to a left-hand screw.

Right Lay:

- **Strand:** Strand in which the cover wires are laid in a helix having a right-hand pitch, similar to a right-hand screw.
- **Rope:** Rope in which the strands are laid in a helix having a right-hand pitch, similar to a right-hand screw.

LIFT:

- Maximum safe vertical distance through which a hook can travel.
- The hoisting of a load.

LIFT, CRITICAL: A lift for which the application of provisions applicable to ordinary lifts would not adequately eliminate or control the likelihood or severity of the following:

- personnel injury or significant adverse health impact (onsite or offsite).
- significant release of radioactivity or other hazardous material or other undesirable conditions.
- undetectable damage that would jeopardize future operations or the safety of a facility.
- damage that would result in delay to schedule or other significant program impact such as loss of vital data.

LIFT, ORDINARY: Any lift not designated as a critical lift or a preengineered production lift.

LIFT, PREENGINEERED PRODUCTION: Repetitive, production-type lifting operation, independent of the nature of the load to be lifted, in which the probability of dropping, upset, or collision is reduced to a level acceptable to the responsible manager by preliminary engineering evaluation, specialized lifting fixtures, detailed procedures, operation-specific training, and independent review and approval of the entire process.

LIFTING SERVICE: Whenever equipment governed by this standard is used to perform lifts.

LINE: A rope used for supporting and controlling a suspended load.

LOAD: The total weight superimposed on the load block or hook.

LOAD BLOCK: The assembly of hook or shackle, swivel, bearing, sheaves, pins, and frame suspended by the hoisting ropes.

LOAD-BACKREST EXTENSION: A device extending vertically from the fork carriage frame.

LOAD-BEARING PARTS: Any part of a material-handling device in which the induced stress is influenced by the hook load. *A primary* load-bearing part is a part the failure of which could result in dropping, upset, or uncontrolled motion of the load. Load-bearing parts which, if failed, would result in no more than stoppage of the equipment without causing dropping, upset, or loss of control of the load are not considered to be primary load-bearing parts.

LOAD CENTER (FORKLIFTS): The horizontal longitudinal distance from the intersection of the horizontal load-carrying surfaces and vertical load-engaging faces of the forks (or equivalent load-positioning structure) to the center of gravity of the load.

LOW-LIFT TRUCK: A self-loading truck equipped with an elevating mechanism designed to raise the load only sufficiently to permit horizontal movement (see Figure 10-3).

MAGNET: An electromagnetic device carried on a crane hook and used to pick up loads.

MAIN HOIST: The hoist mechanism provided for lifting the maximum-rated load.

MAN TROLLEY: A trolley having an operator's cab attached to it.

MARLINE SPIKE: Tapered steel pin used in splicing wire rope.

MESSENGER STRAND: Galvanized strand or bronze strand used to support telephone and electrical cables.

MODULUS OF ELASTICITY: Mathematical quantity giving the ratio, within the elastic limit, between a definite range of unit stress on a wire rope and the corresponding elongation.

MOUSING: A method of bridging the throat opening of a hook to prevent the release of load lines and slings, under service or slack conditions, by wrapping with soft wire, rope, heavy tape, or similar materials.

NARROW-AISLE TRUCK: A self-loading truck intended primarily for right-angle stacking in aisles narrower than those normally required by counterbalanced trucks of the same capacity (see Figure 10-3).

NONDESTRUCTIVE EXAMINATION (NDE): The development and application of technical methods to examine materials or components, in ways that do not impair future usefulness and serviceability, in order to detect,

locate, measure, and evaluate discontinuities, defects, and other imperfections; to assess integrity, properties, and composition; and to measure geometrical characteristics.

NONDESTRUCTIVE TESTING (NDT): See NONDESTRUCTIVE EXAMINATION.

NONROTATING WIRE ROPE: See ROTATION-RESISTANT WIRE ROPE.

OPEN SOCKET: A wire-rope fitting consisting of a basket and two ears with a pin.

ORDER-PICKER TRUCK, HIGH-LIFT: A truck, controllable by an operator stationed on a platform, which is movable, has a load-engaging means, and is intended for (manual) stock selection. The truck may be capable of self-loading and/or tiering (see Figure 10-3).

OVERHEAD GUARD: A framework fitted to a truck over the head of a riding operator.

PALLET TRUCK: A self-loading, non-motorized or motorized low-lift truck equipped with wheeled forks of dimensions sized to go between the top and bottom boards of a double-faced pallet, the wheels fitting into spaces between the bottom boards, so as to raise the pallet off the floor for transporting (see Figure 10-3).

PEENING: Permanent distortion of outside wire in a rope caused by pounding.

PERSON-IN-CHARGE (PIC): The manager or other responsible person (other than the equipment operator) known to be qualified and appointed to be responsible for the safe handling of critical loads.

POWERED INDUSTRIAL TRUCK: A mobile, power-driven vehicle used to carry, push, pull, lift, stack, or tier material.

PRECISION LOAD POSITIONING DEVICES: A rigging accessory designed specifically to precisely raise and lower a load through a limited range of lifting/lowering motion (stroke). Standards units typically have 12 in. (30 cm) stroke and can position a load within 0.001 in. (0.025 mm). These devices commonly include a built-in load scale and in such cases may also serve as a load-indicating device.

PREFORMED WIRE ROPE: Wire rope in which the strands are permanently shaped, before being fabricated into the rope, to the helical form they assume in the wire rope.

PREFORMED STRAND: Strand in which the wires are permanently shaped, before being fabricated into the strands, to the helical form they assume in the strand.

PRESTRESSING: Stressing a wire rope or strand before use under such a tension and for such a time that stretch that would otherwise occur once the load is picked up is largely nonexistent.

PROOF LOAD: A specific load applied in the performance of a proof load test.

PROOF TEST: A nondestructive tension test performed to verify construction and workmanship of slings or rigging accessories.

PUBLIC CARRIER: A for-hire company engaged in the public transportation of goods.

QUALIFIED: A person who, by possession of a recognized degree, certificate, or professional standing, or who, by extensive knowledge, training, and experience, has successfully demonstrated an ability and competence to solve or resolve problems relating to the subject matter and work.

QUALIFIED ENGINEER/QUALIFIED ENGINEERING ORGANIZATION: An engineer or engineering organization whose competence in evaluation or design of the type of equipment in question has been demonstrated to the satisfaction of the responsible manager.

QUALIFIED INSPECTOR: One whose competence is recognized by the responsible manager and whose qualification to perform specific inspection activities has been determined, verified, and attested to in writing.

QUALIFIED OPERATOR: One who has had appropriate and approved training, including satisfactory completion of both written and operational tests to demonstrate knowledge, competence, and skill, in the safe operation of the equipment to be used.

QUALIFIED RIGGER: One whose competence in this skill has been demonstrated by experience satisfactory to the appointed person.

> **NOTE:** The term "rigger" or "qualified rigger" in this standard refers to the function performed, and in no way relates to the worker's classification in any union or bargaining unit.

RATED CAPACITY: The maximum hook load that a piece of hoisting equipment is designed to carry; also the maximum load that an industrial truck or a sling, hook, shackle, or other rigging tackle is designed to carry.

> **NOTE:** At the option of the user, a rated capacity can be assigned that is less than the design-rated capacity.

REACH TRUCK: A self-loading truck, generally high-lift, having load-engaging means mounted so it can be extended forward under control to permit a load to be picked up and deposited in the extended position and transported in the retracted position (see Figure 10-3).

REEL: The flanged spool on which wire rope or strand is wound for storage or shipment.

REEVING: A system in which a rope travels around drums or sheaves.

REGULAR-LAY ROPE: Wire rope in which the wires in the strands and the strands in the rope are laid in opposite directions.

REVERSE BEND: Reeving of a wire rope over sheaves and drums so that it bends in opposite directions.

RIDER TRUCK: A truck that is designed to be controlled by a riding operator.

RIGGING: The hardware or equipment used to safely attach a load to a lifting device. The art or process of safely attaching a load to a hook by means of adequately rated and properly applied slings and related hardware.

ROLLERS: Relatively small-diameter cylinders or wide-faced sheaves used for supporting or guiding ropes.

ROTATION-RESISTANT WIRE ROPE: Wire rope consisting of a left-lay, lang-lay inner rope covered by right-lay, regular-lay outer strands.

RUNNING SHEAVE: A sheave that rotates as the load block is raised or lowered.

RUNWAY: Assembly of rails, girders, brackets, and framework on which a crane operates.

SAFE WORKING LOAD: Load that a rope may carry economically and safely.

SEALE: A strand construction having one size of cover wires with the same number of one size of wires in the inner layer and each layer having the same length and direction of lay. Most common construction is one center wire, nine inner wires, and nine cover wires.

SEIZE: To securely bind the end of a wire rope or strand with seizing wire or strand.

SEIZING STRAND: Small strand, usually of seven wires, mad of soft-annealed-iron wire.

SEIZING WIRE: A soft-annealed-iron wire.

SELF-LOADER: A truck with tires that can fit between the top and bottom boards of a double-faced pallet.

SERVE: To cover the surface of a wire rope or strand with a wrapping of wire.

Figure 1-3. Shackle

SHACKLE: A type of clevis normally used for lifting (see Figure 1-3).

SHALL: A word indicating that an action is mandatory.

SHEAVE: A grooved wheel or pulley used with a rope to change direction and point of application of a pulling force.

SHEAVE, NONRUNNING (EQUALIZER): A sheave used to equalize tension in opposite parts of a rope, called nonrunning because of its slight movement.

SHEAVE, RUNNING: A sheave that rotates as the load block is lifted or lowered.

SHOULD: A word indicating a recommended action, the advisability of which depends on the facts in each situation.

SIDE LOADER: A self-loading truck, generally high-lift, having load-engaging means mounted in such a manner that it can be extended laterally under control to permit a load to be picked up and deposited in the extended position and transported in the retracted position (see Figure 10-3).

SIDE PULL: That portion of a hoist pull acting horizontally when the hoist lines are not operated vertically.

SLINGS: Wire ropes, chains, synthetic web, and metal mesh made into forms, and with or without fittings, for handling loads.

SLINGS, BRAIDED: Very flexible slings composed of several individual wire ropes braided together.

SMOOTH-FACED DRUM: Drum with a plain, not grooved, face.

SPAN: The horizontal, center-to-center distance of runway rails.

SPIRAL GROOVE: Groove that follows the path of a helix around a drum, similar to the thread of a screw.

SPLICING: Interweaving of two ends of rope to make a continuous or endless length without appreciable increasing the diameter. Also refers to making a loop or eye in the end of a rope by tucking the ends of the strands.

> **Splice, Hand Tucked:** A loop or eye formed in the end of a rope by tucking the end of the strands back into the main body of the rope in a prescribed manner.
>
> **Splice, Mechanical:** A loop or eye formed in the end of a wire rope by pressing or swaging one or more metal sleeve over the wire rope junction.

STAINLESS-STEEL ROPE: Wire rope made of chrome-nickel steel wires having great resistance to corrosion.

STEEL-CLAD ROPE: Rope with individual strands spirally wrapped with flat steel wire.

STRAND: An arrangement of wires helically laid about an axis or another wire or fiber center to produce a symmetrical section.

SUSPECT/COUNTERFEIT ITEMS (S/CI): A suspect item is one in which visual inspection, testing, or other means indicate that it may not conform to established Government or industry-accepted specifications or national consensus standards. A counterfeit item is a suspect item that has been copied or substituted without legal right or authority to do so or one whose material, performance, or characteristics are knowingly misrepresented by the vendor, supplier, distributor, or manufacturer (see Figure 1-5).

NOTE: (refer to DOE G 440.1-6 "Implementation Guide For Use With Suspect/Counterfeit Requirements" of DOE O 440.1, Worker Protection Management).

SWAGED FITTINGS: Fittings in which wire rope is inserted and attached by a cold-forming method.

SWITCH, ELECTRIC: A device for making, breaking, or changing the connections in an electrical circuit.

SWITCH, EMERGENCY STOP: A manually or automatically operated electric switch to cut off electric power independently of the regular operating controls.

SWITCH, LIMIT: A switch that is operated by some part or motion of a power-driven machine

or equipment to alter the electrical circuit associated with the machine or equipment.

SWITCH, MAIN: A switch controlling the entire power supply to a crane or other equipment, often called the disconnect switch.

TAG LINE: A rope used to prevent rotation of a load.

TAPERING AND WELDING: Reducing the diameter of the end of a wire rope and welding it to facilitate reeving.

THIMBLE: Grooved metal fitting to protect the eye of a wire rope (see Figure 1-4).

Figure 1-4. Thimble

TIERING: The process of placing one load on or above another.

TINNED WIRE: Wire coated with tin.

TROLLEY: A unit consisting of frame, trucks, trolley drive, and hoisting mechanism moving on the bridge rails in a direction at right angles to the crane runway.

TROLLEY GIRTS: Structural members that are supported on the trolley trucks and that contain the upper sheave assemblies.

TROLLEY TRAVEL: Horizontal travel of a trolley at right angles to runway rails.

TROLLEY TRUCK: An assembly consisting of wheels, bearings, axles, and structural-supporting hoist mechanism and load girts.

TRUCK, POWERED INDUSTRIAL: A mobile, power-propelled truck used to carry, push, pull, lift, stack, or tier material (see Figure 10-3).

TURNBUCKLE: A device attached to wire rope for making limited adjustments in length. It consists of a barrel and right- and left-hand threaded bolts.

TWO-BLOCKING: The act of continued hoisting in which the load-block and head-block assemblies are brought into physical contact, thereby preventing further movement of the load block and creating shock loads to the rope and reeving system.

VERIFICATION: A procedure in which a design, calculation, drawing, procedure, instruction, report, or document is checked and signed by one or more parties. The one or more persons designated to sign verify, based on personal observation, certified records, or direct reports, that a specific action has been performed in accordance with specified requirements.

WEDGE SOCKET: Wire-rope fitting in which the rope end is secured by a wedge.

WHEEL BASE: Distance between centers of outermost wheels for bridge and trolley trucks.

WHEEL LOAD: The load on any wheel with the trolley and lifted load (rated load) positioned on the bridge to give maximum-loading conditions.

WIRE ROPE: Wire strands laid helically around an axis or a core.

WIRE (ROUND): Single continuous length of metal, cold drawn from a rod.

WIRE (SHAPED): A single continuous length of metal either cold drawn or cold rolled from a rod.

DOE HEADMARK LIST

ANY BOLT ON THIS LIST SHOULD BE TREATED AS DEFECTIVE WITHOUT FURTHER TESTING

ALL GRADE 5 AND GRADE 8 FASTENERS OF FOREIGN ORIGIN WHICH DO NOT BEAR ANY MANUFACTURE'S HEADMARKS:

GRADE 5 GRADE 8

GRADE 5 FASTENERS WITH THE FOLLOWING HEADMARKS:

MARK	MANUFACTURER
J	Jinn Her (TW)
KS	Kosaka Kogyo (JP)

GRADE 8 FASTENERS WITH THE FOLLOWING HEADMARKS:

MARK	MANUFACTURER
A	Asahi Mfg (JP)
E	Dalai (JP)
FM	Fastener Co. of Japan (JP)
H	Hinamoto Metal (JP)
J	Jinn Her (TW)
KY	Kyoei Mfg (JP)
KS	Kosaka Kogyo (JP)
M	Minamida Sleybo (JP)
MS	Minato Kogyo (JP)
NF	Nippon Fasteners (JP)
RT	Takai Lid (JP)
UNY	Unylite (JP)
Hollow Triangle	Intasco (CA, TW, JP, YU) (Greater than 1/2 inch diameter)

GRADE 8.2 FASTENERS WITH THE FOLLOWING HEADMARKS:

MARK	MANUFACTURER
KS	Kosaka Kogyo (JP)

GRADE A325 FASTENERS (BENNETT DENVER TARGET ONLY) WITH THE FOLLOWING HEADMARKS:

	MARK	MANUFACTURER
Type 1	A325KS	Kosaka Kogyo (JP)
Type 2		
Type 3		

AUGUST 1992

KEY: CA - CANADA JP - JAPAN TW - TAIWAN YU - YUGOSLAVIA

GF00 0209

Figure 1-5

CHAPTER 2
CRITICAL LIFTS

This chapter provides guidelines for critical-lift determination and requirements for planning and performing a critical lift safely and judiciously.

2.1 CRITICAL-LIFT DETERMINATION 2-1

2.2 CRITICAL-LIFT REQUIREMENTS 2-2

INTENTIONALLY BLANK

2.1 CRITICAL-LIFT DETERMINATION

a. An appointed person shall classify each lift into one of the DOE categories (ordinary, critical, or preengineered production) prior to planning the lift.

b. A lift shall be designated critical if any of the following conditions are met:

   1. The load item, if damaged or upset would result in a release into the environment of radioactive or hazardous material exceeding the established permissible environmental limits.

   2. The load item is unique and, if damaged, would be irreplaceable or not repairable and is vital to a system, facility or project operation.

   3. The cost to replace or repair the load item, or the delay in operations of having the load item damaged would have a negative impact on facility, organizational, or DOE budgets to the extent that it would affect program commitments.

   4. A lift not meeting the above criteria shall also be designated critical if mishandling or dropping of the load would cause any of the above noted consequences to nearby installations or facilities.

c. Further site-specific criteria may be developed to supplement those cited above and may include loads which require exceptional care in handling because of size, weight, close-tolerance installation or high susceptibility to damage as well as lifts using multiple pieces of lifting equipment.

2.2 CRITICAL-LIFT REQUIREMENTS

a. Ensure that the requirements are met for ordinary lifts specified in each section of this standard for each particular equipment category.

b. The operating organization shall appoint a Person-In-Charge (PIC) for the entire operation. This person shall meet the definitions of appointed, designated, and qualified as described in Chapter 1, "Terminology and Definitions," and shall be present at the lift site during the entire lifting operation.

c. The PIC shall ensure that a pre-job plan or procedure is prepared that defines the operation and includes the following:

1. Identification of the items to be moved, the weight, dimensions, and center of gravity of the load, and any hazardous or toxic materials that are present.

2. Identification of operating equipment to be used by type and rated capacity.

3. Rigging sketches that include (as applicable):

i. Identification and rated capacity of slings, lifting bars, rigging accessories, and below-the-hook lifting devices. Calculate and provide the rated capacity of equipment in the configuration in which it will be used.

ii. Load-indicating devices.

iii. Load vectors.

iv. Lifting points.

v. Sling angles.

vi. Boom and swing angles.

vii. Methods of attachment.

viii. Crane orientations.

ix. Other factors affecting equipment capacity (e.g. load path sketch, key point heights, floor or soil bearing capacity).

4. Operating procedures and special instructions to operators including rigging precautions and safety measures to be followed as applicable.

d. All rigging equipment used in critical lifts (i.e., slings, below-the-hook lifting devices, and rigging hardware) shall have proof load certificates. See Chapters 11, 12 and 14 for proof test requirements of these equipment items.

e. Experienced operators who have been trained and qualified to operate the specific equipment to be used shall be assigned to make the lift.

f. Only designated, qualified signalers shall give signals to the operator. *<u>However, the operator shall obey a STOP signal at all times, no matter who gives the signal.</u>*

g. The procedure and rigging sketches shall be reviewed and approved by the responsible manager (or designee) and the responsible oversight organization (such as safety, quality assurance, or quality control) before the lift is made. Subsequent revisions shall be approved per site specific procedures.

h. A pre-lift meeting involving participating personnel shall be conducted prior to making a critical lift. The critical lift plan/procedure shall be reviewed and questions shall be resolved.

i. If required by the critical lift procedure, a practice lift shall be done before the critical lift. Conditions for a practice lift should closely simulate actual conditions involving: weight, rigging selection and configuration, load movement path, and other relevant factors. Practice lifts should be done by the same crew, using the same lifting equipment.

j. Although individual plans are generally prepared for critical lifts, multi-use plans may be employed to accomplish recurrent critical lifts. For example, a multi-use plan

may be used to lift an item or series of similar items that are handled repeatedly in the same manner. However, if the lifting equipment or rigging must change to accomplish the lift, the critical lift plan must be revised and approved accordingly.

CHAPTER 3
PREENGINEERED PRODUCTION LIFTS

This chapter provides requirements for the design, evaluation, and performance of preengineered production lifts. This lift designation may be used at the discretion of the contractor for selected operations.

3.1 PREENGINEERED PRODUCTION LIFT DETERMINATION 3-1

3.2 LIFTING FIXTURES 3-2
3.2.1 Design 3-2
3.2.2 Fabrication 3-2
3.2.3 Inspection and Testing 3-2
3.2.4 Storage, Maintenance, and Control 3-2
3.2.5 Modification and Repair 3-3

3.3 PROCEDURES 3-4
3.3.1 Content 3-4
3.3.2 Development 3-4
3.3.3 Preparation and Revision 3-4
3.3.4 Approval 3-5
3.3.5 Review 3-5
3.3.6 Use 3-5

3.4 DESIGNATED LEADER 3-6

3.5 TRAINING 3-7
3.6.1 Equipment Operation 3-7
3.6.2 Procedure 3-7

INTENTIONALLY BLANK

3.1 PREENGINEERED PRODUCTION LIFT DETERMINATION

a. An appointed person shall classify each lift into one of the DOE categories (ordinary, critical, or preengineered production lift prior to planning the lift.

b. A lift may be determined to be a preengineered production lift if all of the following criteria are met:

1. The group of items to be lifted is identical in terms of dimensions, weight, center of gravity, load path, method of attachment to the lifting equipment, and selection of lifting equipment.

2. All items must be lifted in adherence to a specific step-by-step procedure that eliminates job rigging decisions or calculations by lift personnel. The lifting procedure shall address the specific operation and attachment of all lifting equipment, fixtures and accessories.

3. Training procedures are in place to ensure specialized training is provided to personnel involved in preengineered production lifts.

3.2 LIFTING FIXTURES

3.2.1 DESIGN

a. Special lifting fixtures (e.g., below-the-hook lifting devices) and rigging accessories shall be designed according to recognized consensus standards (29 CFR 1910, Occupational Safety and Health Standards for General Industry: 29 CFR 1926, Occupational Safety an Health Regulations for Construction; ASME B30.9, "Slings," B30.10, "Hooks," B30.20, "Below-the-Hook Lifting Devices," etc.), and the lifting fixture design requirements in Chapters 12 and 14 ("Rigging Accessories" and "Below-the-Hook Lifting Devices," respectively).

b. Special lifting fixtures shall be designed by a qualified engineer.

c. The designer shall determine the requirements for initial and periodic inspections or tests, including acceptance/rejection criteria and periodic inspection/test intervals.

d. Special lifting fixture designs shall receive a documented review by another member of a qualified engineering organization and the responsible oversight organizations (safety, quality assurance, etc.).

e. Deviations in design that may result in design factors less than consensus standard requirements shall require documented justification and approval of the designer's manager and the manager of the responsible oversight organizations (safety, quality assurance, etc.).

f. Applications not specifically addressed in the ASME standards or in this standard may be approved by the responsible manager and oversight organizations (safety, quality assurance, etc.) when justification and documentation are provided and all other provisions of this section are met.

3.2.2 FABRICATION

Special lifting fixtures shall be fabricated according to the specifications of the approved design package.

3.2.3 INSPECTION AND TESTING

a. Before initial use of each special lifting fixture, a qualified inspector shall perform a documented acceptance inspection and test on it. This process shall include:

   1. Verification of configuration of the fixture against the design drawing specifications.

   2. Proof-testing as specified in the approved design package.

   3. Nondestructive examination as specified in the approved design package.

b. Personnel performing the lift shall visually inspect special lifting fixtures before use for visible signs of wear, deformation, deterioration, or damage. Records are not required.

c. A qualified inspector shall conduct periodic, documented inspections as required by the design organization. In addition to looking for visible signs of wear, deformation, deterioration, or damage, these inspections shall verify the current configuration of the fixture against that specified in the approved design package.

d. Equipment to be used (cranes, hoists, forklifts, etc.) shall be inspected according to the appropriate section requirements in this standard for that type of equipment.

3.2.4 STORAGE, MAINTENANCE, AND CONTROL

a. Lifting fixture users shall do the following:

   1. Store special lifting fixtures in an appropriate location to prevent damage or deterioration.

   2. Perform and document periodic preventive maintenance as required by the design organization.

   3. Establish controls to ensure that special lifting fixtures are used only in

operations for which they were functionally designed.

4. Maintain equipment to be used (cranes, hoists, forklifts, etc.) according to the appropriate section requirements in this standard for that type of equipment.

5. If equipment maintenance procedures deviate from published manufacturer's recommendations, the alternate procedures shall be approved in advance by the manufacturer or another qualified person and be kept readily available.

3.2.5 MODIFICATION AND REPAIR

a. Modification to special lifting fixtures shall be designed, approved, and fabricated according to Sections 3.2.1, and 3.2.2, ("Design," and "Fabrication," respectively).

b. Following modification or repair of a load-bearing element of a special lifting fixture, the fixture shall be inspected and tested according to the initial use requirements in Section 3.3.3, "Inspection and Testing."

3.3 PROCEDURES

A detailed, approved, step-by-step procedure shall be developed for the entire operation.

3.3.1 CONTENT

a. At a minimum, each procedure shall contain the following information:

   1. Identification of the load to be lifted.

   2. Identification of the specific lifting fixtures to be used in the operation.

   3. Identification by class and capacity (if applicable) of the types of equipment to be used, such as cranes and hoists.

   4. Verification that all equipment, fixtures, and accessories are operative, up-to-date on required periodic inspections and maintenance, and are in good condition before the operation begins.

   5. Specific instructions for attachment of the lifting fixtures to the load and to the lifting equipment.

   6. Parameters of motion required for the operation.

   7. Specific instructions for removal of the lifting fixtures from both the load and the lifting equipment.

3.3.2 DEVELOPMENT

a. The methods for developing new procedures, including standard procedure formats, should be clearly defined. Administrative procedures or writers guides should direct the development and review process for procedures at each site to ensure consistency at the site.

b. Qualifications for procedure writers shall be considered, including operating organization and experience.

c. Procedures should reference applicable source documents, such as facility design documents, safety analysis documents, vendor technical manuals, and industry standards.

d. Operating procedures should contain only one action per step.

e. Any necessary warnings, cautions, or notes should be easily identifiable and should not contain any action statements. These items should precede the step to which they apply and should appear on the same pate as the step to which they apply.

f. The sequence of procedural steps should conform to the normal or expected operational sequence.

g. Procedures should be developed with consideration for the human-factor aspects of their intended use. For example, references to components should exactly match drawing and label-plate identifiers, and units should be the same as those marked on applicable instrumentation. Important factors should be highlighted, such as operating limits, warnings, and cautions.

3.3.3 PREPARATION AND REVISION

a. Appropriately trained personnel shall develop, review, and approve a step-by-step procedure for each lifting operation. The responsible oversight organizations (safety, quality assurance, etc.) shall participate in the review process.

b. Before its first use in the actual production process, the procedure shall undergo a formal verification and validation process using walk-throughs or similar methods to ensure that the steps are appropriate and correct. Any discrepancies found during this process shall be corrected and the process repeated until the procedure is correct.

c. Any changes to an existing, approved procedure shall be performed according to the process specified above. The change shall be evaluated to determine whether the revised procedure must be revalidated and reverified.

3.3.4 APPROVAL

a. Before each procedure is validated, it shall be reviewed and approved by the following personnel:

   1. Author of the procedure.

   2. Representative of a qualified engineering organization.

   3. Representatives of the responsible oversight organizations (e.g., safety, quality assurance).

b. After each procedure is validated, it shall be reviewed and approved by the following personnel:

   1. Author of the procedure.

   2. Representative of a qualified engineering organization.

   3. Representatives of the responsible oversight organizations (i.e., safety, quality assurance).

   4. Management of the facility where the procedure will be performed.

   5. Management of the production organization performing the procedure.

c. Revisions of procedures shall receive the same depth of review and level of approval as the initial versions received.

d. All procedures, either new or revised, shall be approved before use.

3.3.5 REVIEW

a. Approved procedures should be reviewed at periodic intervals to ensure that their information and instructions are technically accurate and that appropriate human-factor considerations have been included.

b. The frequency of reviews should be specified for each procedure; it may vary with the type and complexity of the activity involved.

c. Applicable procedures should be reviewed after an incident.

d. During each review, procedures should be compared to source documents to verify their accuracy.

3.3.6 USE

a. A copy of the current issue of the approved procedure shall be in the work area when the operation is performed.

b. Deviations from the approved procedure are not allowed during normal operations.

c. The requirements for use of procedures should be clearly defined and understood by all personnel.

d. If a procedure is determined to be deficient, a procedure change shall be initiated before operations continue.

e. Personnel performing the procedure may take whatever action is necessary during emergency conditions to return the process to a safe and stable condition without first initiating a procedure change.

3.4 DESIGNATED LEADER

a. Each time a preengineered production lift requiring more than one person is performed, a designated leader shall be present at the lift site during the entire operation.

b. Leadership designation may be by written instructions, specific verbal instruction for the particular job, or clearly defined responsibilities within the crew's organizational structure.

c. The designated leader's responsibility shall include the following:

   1. Ensure that the personnel involved have received proper and current training and qualification for the procedure.

   2. Ensure that the equipment and accessories specified in the procedure are available.

   3. Survey the lift site for hazardous or unsafe conditions.

   4. Ensure that equipment is properly set up and positioned.

   5. Ensure that a signaler is assigned, if required, and identified to the equipment operator.

   6. Direct the lifting operation to ensure that it is done safely and efficiently.

   7. Stop the job when any potentially unsafe condition is recognized.

   8. Direct emergency stabilization operations if an accident or injury occurs.

3.5 TRAINING

Specialized training shall be conducted for personnel involved in performing preengineered production lifts. This training shall be periodically reviewed and approved by the responsible operating and oversight organizations (safety, quality assurance, etc.).

3.5.1 EQUIPMENT OPERATION

a. Personnel shall be trained and qualified on the specific types of equipment required.

b. The equipment operation training shall include:

   1. A demonstration by the individual of operational competence with the equipment.

   2. A demonstration of appropriate safe operating practices.

   3. Documented evidence of the individual's knowledge of safety-related information.

c. Equipment-operation training shall be repeated for personnel whenever a new or different type of equipment is introduced into the procedure.

3.5.2 PROCEDURE

a. Personnel shall be trained and qualified in the proper execution of each specific procedure.

b. The training shall include:

   1. A demonstration by the individual of operational competence in performance of the procedure.

   2. Documented evidence of the individual's knowledge of the steps and requirements of the procedure.

c. Training on a procedure shall be repeated periodically or when a modification to the procedure results in a significant change in the operation.

CHAPTER 4
LIFTING PERSONNEL

This chapter specifies the design and inspection requirements for personnel lift platforms as well as the operational requirements for such platforms and appurtenant hoisting equipment. It implements the requirements of ASME B30.23, Personnel Lifting Systems (for latest ASME standards, see http://catalog.asme.org/home.cfm?Category=CS).

4.1 GENERAL 4-1
- 4.1.1 Personnel Lifting Evaluation 4-1
- 4.1.2 Designated Leader 4-1
- 4.1.3 Trial Lift 4-2
- 4.1.4 Lifting Operations 4-2
  - 4.1.4.1 Pre-Lift Meeting 4-2
  - 4.1.4.2 Pre-Lift Inspection 4-2
  - 4.1.4.3 Lifting Personnel 4-2

4.2 MOBILE CRANES 4-5

4.3 OVERHEAD CRANES 4-6

4.4 PERSONNEL LIFT PLATFORM 4-7
- 4.4.1 Platform Design and Construction 4-7
- 4.4.2 Platform Suspension System 4-7

4.5 INSPECTIONS 4-9
- 4.5.1 Frequent Inspection 4-9
  - 4.5.1.1 General 4-9
  - 4.5.1.2 Personnel Lift Platform 4-9
- 4.5.2 Periodic Inspection 4-9
  - 4.5.2.1 Personnel Lift Platform 4-9
  - 4.5.2.2 Hoisting Equipment 4-9

4.6 TESTING 4-10
- 4.6.1 Platform Manufacturer Test 4-10
- 4.6.2 Rated Load Test 4-10
- 4.6.3 Hoisting Equipment 4-10

4.7 LIFTING PERSONNEL NEAR ELECTRICAL POWER LINES 4-11
- 4.7.1 General 4-11
- 4.7.2 Condition A 4-11
- 4.7.3 Condition B 4-11
- 4.7.4 Condition C 4-12

Exhibit I Personnel Lift Platform Pre-Lift Inspection 4-15
Exhibit II Personnel Lifting Planning and Authorization Form 4-16

INTENTIONALLY BLANK

4.1 GENERAL

This chapter specifies the operation, design, testing, and inspection requirements for the use of personnel lift platforms or baskets suspended from mobile or overhead cranes. This chapter implements the requirements of 29 CFR 1926.550(g) "Cranes and Derricks" and ASME B30.23, "Personnel Lifting Systems."

4.1.1 PERSONNEL LIFTING EVALUATION

a. The use of a crane to hoist employees on a personnel lift platform is prohibited, except when the erection, use, and dismantling of conventional means of reaching the worksite, such as a personnel hoist, ladder, stairway, aerial lift, elevating work platform or scaffold, would be more hazardous or is not possible because of structural design or worksite conditions.

b. The manager specifically responsible for the overall work function to be performed shall determine that the erection, use, and dismantling of conventional means of reaching the work site (i.e., scaffold, ladder, stairway, aerial lift, or elevating work platform) would be more hazardous or is not possible because of structural design or worksite conditions.

c. For each personnel lifting procedure, the manager responsible for the task shall authorize the use of a crane-suspended work platform and attest to the need for the operation through a written justification attesting to that need. A statement describing the operation and its time frame shall be included. The statement, after being approved by the authorizer, shall be retained at the job site.

d. The manager specifically responsible for the overall work function shall not allow or require any operator to lift personnel under the following circumstances:

    1. The operator does not feel physically or mentally fit to perform the operation.

    2. The operator has been working for more than 10 hours prior to the start of the lift or the lift will not be completed before the operator has been working for 12 hours.

    3. The operator did not have at least eight hours off, immediately prior to the work shift containing the person.

4.1.2 DESIGNATED LEADER

a. The Authorizing Manager shall appoint a Designated Leader for the entire personnel lifting operation.

b. The Designated Leader shall ensure that a pre-job plan is prepared that defines the operation. The Designated Leader shall ensure:

    1. At each new job site prior to hoisting personnel, the personnel lift platform, rigging, and hook block shall be proof-tested by a qualified inspector to 125 percent of the personnel platform's rated capacity by holding it suspended for 5 minutes with the test load suitably distributed on the personnel platform.

    2. After proof-testing, any deficiencies revealed by inspection, or by the proof test, be corrected and another proof-test conducted.

    3. Any modification to the personnel lift platform or rigging requires retesting.

    4. Test reports kept on file and readily available to appointed personnel.

    5. A meeting, with the qualified operator, signaler, persons to be lifted, and the person responsible for overall worksite safety to plan is held prior to the trial lift to review the procedure.

    6. The procedures for entering and leaving the personnel platform and the points at which persons will enter and leave the device be reviewed. This meeting shall be held at each new work location, and shall be repeated for any employees newly assigned to the operation.

c. The designated leader and the crane operator shall determine that:

1. The crane is uniformly level within 1 percent of level grade and firm footing exist under both crawler tracks or under each outrigger float. Cribbing mats under tracks or blocks under outrigger floats are used as necessary to provide a firm and substantial footing.

2. Cranes equipped with outriggers have outriggers extended in accordance with the manufacturer's instructions.

3. Crane systems, controls, operator aids, and safety devices are activated and functioning properly.

4. No interferences exist.

5. The total weight of the loaded personnel lift platform (including personnel) and related rigging does not exceed 50 percent of the crane rating under the planned conditions of use.

6. The personnel lift platform is not loaded in excess of its rated load capacity.

7. The number of employees occupying the platform does not exceed the number required for the work being performed.

4.1.3 TRIAL LIFT

a. Each shift, before personnel initially enter the personnel lift platform, the operator and signaler shall conduct a trial lift. The trial lift shall include:

1. Loading the unoccupied personnel platform to at least the maximum anticipated load. Materials and tools to be used during the actual lift, if secured to prevent displacement, can be in the platform for the trial lift.

2. Making the trial lift from the location where personnel will enter the platform to each location where the platform will be hoisted and positioned. It is acceptable to perform a single trial lift on each shift for all locations to be reached from a single setup position.

b. The trial lift shall be repeated whenever:

1. The crane (mobile) is moved and set up in a new location or returned to a previously used location.

2. When the lift route is changed, unless the operator determines that the safety of the hoisted personnel is not affected.

3. If a different crane operator is assigned.

4.1.4 LIFTING OPERATIONS

4.1.4.1 Pre-Lift Meeting

a. A meeting attended by the operator, the ground crew, signaler(s), person(s) to be lifted, and the designated leader shall be held each shift to plan and review procedures to be followed, including:

1. Points at which persons will enter and leave the platform.

2. Procedures for entering and leaving the platform.

3. Special precautions if personnel will perform work from the suspended platform.

b. This meeting shall be held at each new work location, and shall be repeated for any employees newly assigned to the operation.

4.1.4.2 Pre-Lift Inspection

a. After the trial lift, prior to lifting personnel:

1. A visual inspection of the crane, rigging, and personnel lift platform shall be conducted by a qualified inspector. Any defects found that create a safety hazard shall be corrected prior to hoisting personnel.

2. The platform shall be lifted a few inches and inspected to ensure that it is secure and properly balanced.

4.1.4.3 Lifting Personnel

a. Prior to hoisting personnel in a personnel lift platform, ensure that:

1. No hazardous conditions exist with the platform and its associated rigging.

2. The hoist line is not wrapped around any part of the platform.

3. Hoist ropes are free of kinks.

4. Multiple-part lines are not twisted around each other.

5. The primary attachment is centered over the platform.

6. Ropes are properly seated on drums and sheaves.

7. The crane is within 1 percent of level.

8. The crane has an anti two-block device installed and operational.

b. Employees being hoisted or working in a personnel lift platform shall:

1. Remain in continuous sight of, and in direct communication with, the operator or signaler. In situations where direct visual contact with the operator is not possible, and the use of a signaler would create a hazard for that person, direct communication alone (such as a two-way radio) may be used.

2. Keep all parts of their bodies inside the suspended personnel lift platform during raising, lowering, and positioning to avoid pinch points.

3. Wear body harnesses with lanyards attached to the lower load block or overhaul ball, or to a structural member within the platform that is capable of supporting a fall impact.

4. Not stand on or work from the tope rail, midrail, or toe board of the suspended personnel platform.

5. When working above water, the requirements of 29 CFR 1926.106 (Occupational Safety and Health Regulations for Construction) shall also apply.

6. When welding is being performed from the personnel lift platform, the electrode holders shall be protected from contact with metal components of the personnel platform.

c. Operators of cranes hoisting personnel in a personnel lift platform shall:

1. Before commencing or continuing the lift, consult with the designated leader whenever there is any doubt as to the safety of the lift.

2. Remain at the controls when the personnel lift platform is occupied.

3. Operate the crane so that lowering will be power-controlled (no free-fall).

4. Ensure movement of the personnel lift platform is performed in a slow, controlled, cautious manner with no sudden movements of the crane or the platform. The lifting or lowering speed shall not exceed 100 ft/min (30m/min).

5. After the personnel lift platform is positioned, set all brakes and locks on the lift crane before personnel perform any work.

6. If the personnel lift platform cannot be landed, ensure it is tied to the structure before personnel get off or on.

7. Ensure that lifts are not made on another of the crane's load lines while personnel are suspended on the personnel lift platform.

d. Suspended personnel lift platforms shall be used only for personnel, their tools, and sufficient materials to do their work. They shall not be used for transporting bulk materials.

e. Personnel lift platforms should not be used in winds greater than 20mph (32.2 km/hr), electric storms, snow, ice, sleet, or other adverse weather conditions that could affect the safety of personnel.

f. Use tag lines to control motion of occupied personnel lift platforms unless their use creates an unsafe condition.

g. Cranes shall not travel while personnel are in the platform. Exceptions to this provision shall be approved by the manager specifically responsible for the overall work function and precautions to be taken documented in the personnel lift plan.

4.2 MOBILE CRANES

Mobile cranes are designed and intended for handling materials, not personnel. In addition to the general requirements in Section 4.1, "General," the following requirements shall be met when lifting personnel with a mobile crane:

a. Personnel are permitted to ride only in one of the following:

   1. A personnel lift platform that is supported from the crane's hook which meets the requirements of Section 4.4, "Personnel Platform."

   2. A personnel basket attached directly to the boom which is approved by the crane manufacturer.

b. Cranes and derricks with variable-angle booms shall be equipped with a boom-angle indicator that is readily visible to the operator.

c. Cranes with telescoping booms shall be equipped with a device to indicate clearly to the operator, at all times, the boom's extended length, or an accurate determination of the load radius to be used during the lift shall be made prior to hoisting personnel.

d. A positive-acting device shall be used that prevents contact between the load block or overhaul ball and the boom tip (anti-two-blocking device), or a system shall be used that deactivates the hoisting action before damage occurs in the event of a two-blocking situation (two-block damage-prevention feature).

e. Cranes having booms in which lowering is controlled by a brake without aid from other devices which slow the lowering speeds is prohibited.

f. Crane load lines shall be capable of supporting, without failure, at least seven times the maximum intended load, except where rotation resistant rope is used, the lines shall be capable of supporting without failure, at least ten times the maximum intended load.

g. Hydraulic cranes shall have check valves or other devices that will prevent uncontrolled movement in the event of system failure, engine failure, or hose rupture.

h. Cranes shall have a means to prevent retraction of hydraulically or pneumatically activated outriggers or stabilizers in the event a hydraulic or pneumatic line fails.

i. Pendant supported, jib type, boom extensions without positive stops are prohibited for personnel lifting.

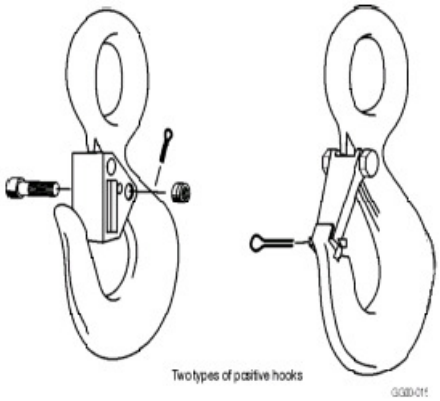

Figure 4-1. Positive Hooks

j. Hooks on overhaul ball assemblies, lower load blocks, or other attachment assemblies shall be of the type that can be closed and locked, eliminating the hook throat opening. (See Figure 4-1). Alternatively, an alloy anchor type shackle with a bolt, nut and retaining pin may be used.

4.3 OVERHEAD CRANES

Overhead cranes are designed and intended for handling materials, not personnel. In addition to the general requirements in Section 4.1, "General," the following requirements shall be met when lifting personnel with an overhead crane.

a. Personnel are permitted to ride only in a personnel lift platform that is supported from the crane's hook which meets the requirements of Section 4.4.

b. A hoist-limit switch/device shall be provided in the hoisting direction to stop the hoisting motion to prevent two-blocking.

4.4 PERSONNEL LIFT PLATFORM

4.4.1 PLATFORM DESIGN AND CONSTRUCTION

There is no attempt to comprehensively address platform design and construction in this chapter. Nevertheless, because many platform design and construction features can be observed and should be known by the platform user (see Figure 4-2), the following key design and construction requirements are presented:

a. The personnel lift platform and suspension system shall be designed by a qualified person competent in structural design and familiar with national consensus standards governing personnel platform design.

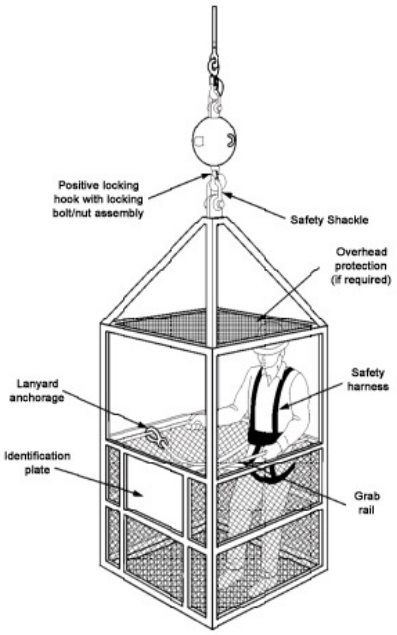

Figure 4-2. Personnel Lift Platform

b. All welding of the platform shall be performed in accordance with ANSI/AWS D1.1. Where special steels or other materials are used, the manufacturer shall provide welding procedures. Inspections shall be to the appropriate ANSI/AWS protocols.

c. The personnel lift platform shall have:

1. A minimum design factor of five.
2. A plate specifying its empty weight and its rated load capacity or maximum intended load.
3. Perimeter protection consisting of a top rail approximately 45 in. (10 cm) high, and a midrail approximately halfway between the top rail and the toe board.
4. A grab rail inside the personnel lift platform to minimize hand exposure.
5. Anchorage points within the platform for attaching personnel fall protection lanyards.
6. The sides of the platform enclosed from the toe board to the midrail with solid construction or expanded metal having openings no greater than ½ in. (1.27 cm).
7. Platform access gates, including sliding or folding types, if installed, shall have a positive acting device to restrain the gate from accidental opening. Swinging type access gates shall open only to the interior of the personnel lift platform.
8. Rough edges exposed to contact by employees surfaced (ground smooth) to prevent injury.
9. High-visibility color or marking for easy identification.

d. In addition to wearing hard hats, personnel shall be protected by overhead protection on the personnel lift platform when there is an overhead hazard. Sufficient headroom shall be provided to allow employees to stand upright in the platform.

4.4.2 Platform Suspension System

a. Wire rope, shackles, rings master links, and other rigging hardware must be capable of supporting, without failure, at least five times the maximum intended load applied or transmitted to that component and guided by the following:

1. One-leg system – design factor of seven.

2. Two- or three-leg system – design factor of five for each leg.

3. Four-leg system – design factor of five with only three legs under stress.

4. Where rotation resistant rope is used, the slings shall be capable of supporting without failure at least ten times the maximum intended load.

b. Sling suspension systems shall utilize a master link or safety type shackle to connect the personnel lift platform to the load block to ensure that the load is evenly divided among the suspension system legs.

c. The suspension system shall be designed to minimize tipping of the platform due to movement of employees occupying the platform.

d. The sling suspension system attaching the personnel lift platform to the hoist line shall not be used for any other purpose when not hoisting personnel.

e. Shackles used in any part of the suspension system shall be a safety type (bolt-type shackle with nut and cotter pin).

f. All eyes in wire rope slings shall be fabricated with thimbles.

g. Wire rope clips, wedge sockets, or knots shall not be used in suspension system sling assemblies.

h. Synthetic webbing, natural or synthetic fiber rope shall not be used for the suspension systems.

i. Chain sling suspension systems shall use a minimum of grade 80 chain.

4.5 INSPECTIONS

All equipment used in the lifting of personnel shall be inspected, tested, and maintained to protect against failure during lifting operation.

4.5.1 FREQUENT INSPECTION

4.5.1.1 General

a. The platform manufacturer shall furnish complete inspection criteria for the platform users. The criteria shall address all inspection frequency classifications and shall cover:

   1. The platform

   2. Rigging components

   3. Fasteners

   4. All safety features and attachments.

4.5.1.2 Personnel Lift Platform

a. Prior to initial use, and at each new job, the platform shall be inspected by a qualified inspector in accordance with the instructions provided by the manufacturer.

b. The platform, suspension system, attachment points, and any motion controls shall be inspected at least each day, before use, by a designated person. The inspection is to identify conditions that have been specifically indicated by the platform manufacturer, or a qualified person, as potentially creating a hazardous operating condition. Visually inspect items such as the following:

   1. Platform and suspension system markings to ensure all information is legible.

   2. Platform structure:

      i. Load supporting members, welds and bolts.

      ii. Perimeter protection; top rail, midrail, toe board, and barrier from toe board to midrail.

      iii. Fall protection device anchorage points.

      iv. Gate locking mechanisms.

      v. Platform flooring.

      vi. Suspension attachment points.

   3. Attachment mechanisms.

      i. Master links, shackles, slings, bolt-ups, etc.

   4. Special purpose items:

      i. Overhead protection.

      ii. Platform controls

c. For frequent inspections, dated records for the hoisting equipment and personnel lift platform shall be made and kept by the platform user for the duration of the personnel lift operation.

4.5.2 PERIODIC INSPECTION

4.5.2.1 Personnel Lift Platform

a. At least once every 12 months, or as required by the personnel lift platform manufacturer, a periodic inspection of the platform shall be performed by a qualified inspector in accordance with the instructions provided by the manufacturer.

b. Platforms which have been out of service for 12 or more consecutive months shall receive a periodic inspection prior to use.

c. Dated inspections records for the platform shall be made. The last periodic inspection records shall be kept with the platform and available for review.

4.5.2.2 Hoisting Equipment

a. Hoisting equipment shall be inspected in accordance with requirements of Chapter 7, “Overhead & Gantry Cranes,” or Chapter 9, “Mobile Cranes.”

4.6 TESTING

4.6.1 PLATFORM MANUFACTURER TEST

a. The platform manufacturer shall perform the following testing:

   1. Test the personnel lift platforms:

      i. Suspension mechanisms or attachment components.

      ii. Occupant safety features.

      iii. Platform rating.

      iv. When the complete production platform is not supplied by one manufacturer, the manufacturers platform test shall be conducted at final assembly by the platform assembler or a qualified inspector.

   2. Slings (wire rope or chain) shall receive an initial load test before installation by applying a test load to each individual leg equal to twice the rated load of the leg. If a master link or safety shackle is used in the suspension system, it shall be tested to at least the weight of the platform plus the platform rating.

      i. All tested components shall be visually inspected after testing.

      ii. Any components showing damage shall be replaced and the test procedure repeated.

   3. Non-destructive testing of the platform's suspension system attaching points.

4.6.2 RATED LOAD TEST

a. At least annually and at each new job site, before personnel are hoisted, the personnel platform and suspension system shall be load-tested to 125 percent of the personnel platform's rated capacity.

b. The platform shall be held in a suspended position for 5 minutes with the load suitably distributed.

c. Load-testing may be done concurrently with the trial lift.

d. After load-testing, any deficiencies revealed during the inspection shall be corrected and another load test shall be conducted.

e. Structural repair or modification to the platform requires load-testing to 150 percent of the rated capacity.

f. When feasible, the hoisting equipment to be used for lifting personnel should be the equipment used to perform the load-test at the job site.

g. Dated test reports shall be kept on file and shall be readily available to appointed personnel.

4.6.3 HOISTING EQUIPMENT

a. Hoisting equipment shall be tested in accordance with requirements of Chapter 7, "Overhead & Gantry Cranes," or Chapter 9, "Mobile Cranes.

4.7 LIFTING PERSONNEL NEAR ELECTRICAL POWER LINES

4.7.1 GENERAL

a. When lifting personnel near electrical power lines, it is advisable to perform the lift so there is not possibility of the crane, load line, or personnel platform becoming a conductive path.

b. Cranes shall not lift personnel under electrical power line if any combination of boom, personnel platform, load line, or machine components will enter the prohibited zone (See figure 4-3).

c. Lifting personnel near electrical power lines is not allowed unless there is no less hazardous way to perform the job. The following conditions must be considered when lifting personnel near electrical power lines:

4.7.2 CONDITION A

a. Power Lines are de-energized and grounded. (The safest and preferred condition). The following steps shall be taken when lifting personnel in Condition A:

1. The electrical utility organization shall de-energize the power lines.

2. As a minimum, the power lines shall be visible grounded to avoid the possibility of electrical feedback.

3. Before lifting personnel, a qualified representative from the electrical utility organization shall be on site to verify that the power lines are de-energized and grounded.

4. In addition to Electrical Hazard Warning Signs required on all mobile cranes, Electrical Hazard Warning Signs shall be posted inside the personnel lift platform.

5. Proximity warning devices, insulated links or boom cages, if used, shall not be a substitute for any requirements of this section.

4.7.3 CONDITION B

a. Power lines are energized with the equipment outside the prohibited zone, but working within a fully extended boom length of the prohibited zone. Regardless of whether the crane boom will be fully extended, the fully extended boom length shall be considered (see figure 4-4). The following steps shall be taken when lifting personnel in Condition B:

1. A meeting, on the job site, between the Personnel Lift Authorizing Manager, the Designated Leader, and a qualified representative of the electrical utility organization shall take place. Procedures to safely complete the lift shall be established.

2. The clearance specified in Table 4-1 shall be maintained between the hoisting equipment, loadline and personnel basket at all times.

3. Power line movements, horizontal and vertical, caused by wind shall be considered.

4. The required clearances to the power lines shall be continuously monitored by a signal person, also called a “wire watcher,” whose sole responsibility is to maintain proper clearance. The “wire watcher” shall be in constant communication with the crane operator.

5. Tag lines to the personnel platform, when used, shall be of a nonconductive type, such as dry rope made of polypropylene or polyethylene fiber.

6. No person outside the platform or crane cab shall be permitted to touch the crane, load line or platform unless the “wire watcher” indicates it is safe.

7. Operation of the boom or the platform over power lines should be avoided. Poor perception of distance and multiple potential contact points make this very hazardous.

8. Consider attaching ribbons, balls, or other visibility enhancing devices, to the power line to aid in visually locating the prohibited zone.

9. In addition to Electrical Hazard Warning Signs required on all mobile cranes, Electrical Hazard Warning Signs shall be posted inside the personnel lift platform.

10. Proximity warning devices, insulated links or boom cages, if used, shall not be a substitute for any requirements of this section.

4.7.4 CONDITION C

a. Power lines are energized with the equipment inside the prohibited zone (See Table 4-1). **Lifting personnel in the condition is strictly prohibited.**

Table 4-1. Safe working distance from power lines

a. When operating near high-voltage power lines:				
Normal voltage (phase to phase)				**Minimum required clearance**
	Up	to	50 kV	10 ft (3.1 m)
Over	50	to	200 kV	15 ft (4.6 m)
Over	200	to	350 kV	20 ft (6.1 m)
Over	350	to	500 kV	25 ft (7.6 m)
Over	500	to	750 kV	35 ft (10.7 m)
Over	750	to	1000 kV	45 ft (13.7 m)

b. While in transit with no load and boom or mast lowered:				
Normal voltage (phase to phase)				**Minimum required clearance**
	Up	to	0.75 kV	4 ft (1.8 m)
Over	0.75	to	50 kV	6 ft (1.3 m)
Over	50	to	345 kV	10 ft (3.5 m)
Over	345	to	700 kV	16 ft (4.9 m)
Over	750	to	1000 kV	20 ft (6.1 m)

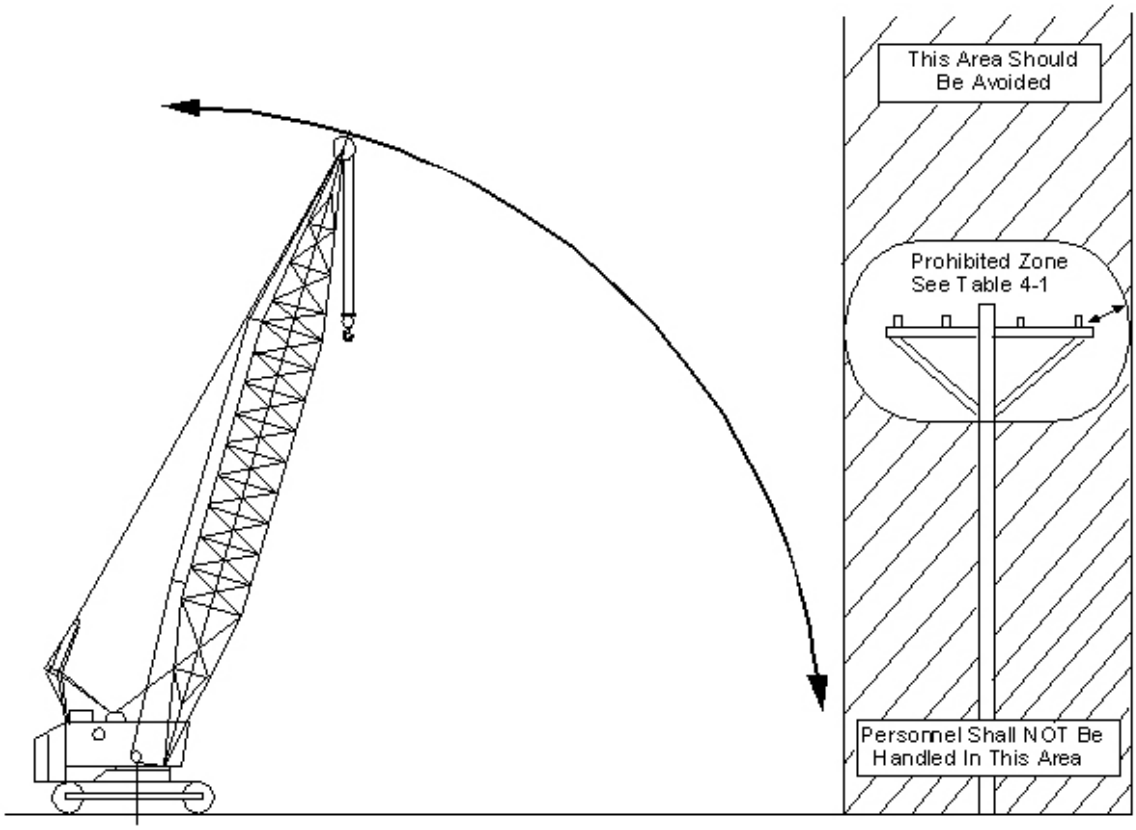

Reprinted from ASME B30.23-2005 by permission of The American Society of Mechanical Engineers. All rights reserved.

Figure 4-3. Danger Zone for Cranes and Lifting Personnel Near Electrical Transmission Line

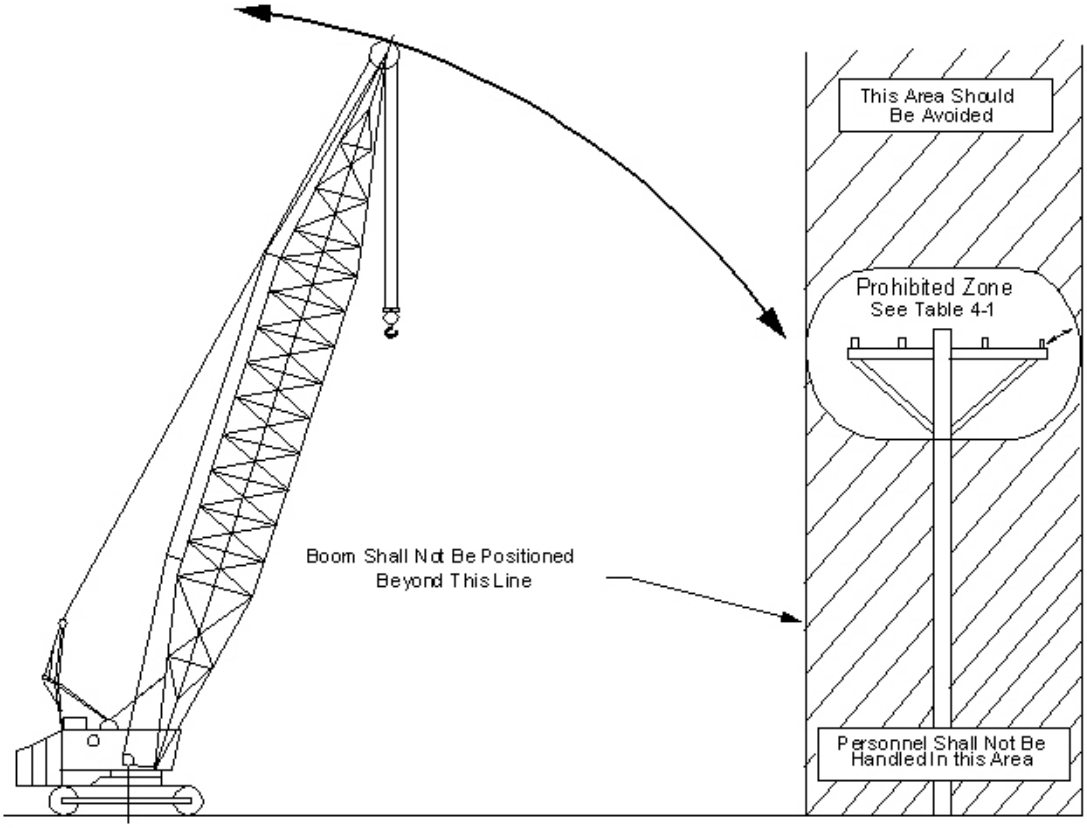

Reprinted from ASME B30.23-2005 by permission of The American Society of Mechanical Engineers. All rights reserved.

Figure 4-4. Danger Zone for Cranes Lifting Personnel Near Electrical Transmission Lines

EXHIBIT I
(SAMPLE FORM ONLY)

PERSONNEL LIFT PLATFORM PRE-LIFT INSPECTION

Inspector: _____Date: _____

Platform Identification Number: _____

1. Trial Lift Completed with anticipated lift weight: _____(lbs. or kg)

2. Markings	Satisfactory	Unsatisfactory
Platform (All Information Legible)	( )	( )
Suspension System	( )	( )
3. Structure		
Load Supporting Welds/Bolts	( )	( )
Load Supporting Members	( )	( )
Barrier From Toe Board to Intermediate Rail	( )	( )
Hand Rail	( )	( )
Fall Protection Device Anchorage Points	( )	( )
Gate Locking Mechanisms	( )	( )
Platform Flooring	( )	( )
Suspension Attachment Points	( )	( )
4. Attachment Mechanisms		
Pins/Ears/Bolt-Up's/eyes (circle)	( )	( )
Wire Rope/Chains/Rigid Leg (circle)	( )	( )
Master Links	( )	( )
5. Special Purpose Items		
(i.e., Overhead Protection, Floatation, Platform Controls)		
List: 1) _____	( )	( )
2) _____	( )	( )
3. _____	( )	( )

6. General Comments: _____

_____

_____

_____

_____

Designated Leader Signature: _____ Date: _____

Reprinted from ASME B30.23-2005 by permission of The American Society of Mechanical Engineers. All rights reserved.

EXHIBIT II
(SAMPLE FORM ONLY)

PERSONNEL LIFTING PLANNING AND AUTHORIZATION

1. Location: _____Date:_____
2. Purpose of Lift: _____
3. Hoisting Equipment Manufacturer: _____
   Model Number: _____
   Serial Number: _____
4. Expected Radius: _____ (Maximum)
_____(At Work Location)
5. (A) Rated Load at Radius: _____
   (B) Maximum Lifted Load (50% of 5A) _____
6. (A) Platform Identification: _____
   (B) Platform Rating: _____
7. Platform Weight: _____
8. (A) Number of Platform Occupants: _____
   (B) Approximate Weight (with equipment): _____
9. Total Lift Weight: _____[(7 + 8B)(No more than 5B above)]
10. Personnel Lift Supervisor: _____
11. What are the alternatives to this personnel lift? _____
_____
_____
12. Why are they not being used? _____
_____
_____
13. Pre-Lint Briefing Held:_____/____/_____ Time:_____AM/PM
    Attendees: _____
_____
14. Anticipated Hazards (wind, weather, visibility, power lines): _____
_____
15. Lift Accomplished Date: :_____/____/_____ Time:_____AM/PM
16. Remarks: _____
_____

Designated Leader Signature:_____ Date: _____

Reprinted from ASME B30.23-2005 by permission of The American Society of Mechanical Engineers. All rights reserved.

CHAPTER 5
HOSTILE ENVIRONMENTS

This chapter describes provisions for hoisting and rigging operations in hostile work environments.

5.1 GENERAL 5-1

5.2 HOSTILE ENVIRONMENT PLAN 5-2
5.2.1 Marking and Posting 5-2
5.2.2 Inspection and Testing 5-2

EXHIBIT I Hostile Environment Plan 5-3

INTENTIONALLY BLANK

5.1 GENERAL

a. This chapter contains special provisions for hoisting and rigging operations and equipment in hostile environments where standard operating, maintenance, inspection, or test procedures cannot be followed as a result of radiation or radioactive contamination, toxic/hazardous chemicals or gases, or temperature extremes. Hostile environments are environments that have been rendered inaccessible to workers during hoisting or rigging operations due to these health hazards.

b. Hoisting and rigging activities can usually be accomplished where the environment will allow normal operations with access for hands-on equipment contact. In those situations, operations, maintenance, inspections, and tests shall be done in accordance with the balance of this standard or other applicable regulatory requirements. Applicable regulations include, but are not limited to, 29 CFR 1910.179 and 29 CFR 1910.184.

c. Hoisting and rigging equipment or operations shall be reviewed by a designated person to determine compliance with the requirements of this standard or other applicable regulatory requirements. If it is determined to be impossible or unreasonable for the requirements of the balance of this standard or other regulatory requirements to be met as a result of hostile environmental conditions, a hostile environment plan shall be prepared to document alternative compliance methods and procedures.

d.. Alternate compliance methods and procedures shall be consistent with a facility's safety basis documents (i.e, Documented Safety Analysis and Technical Safety Requirements).

e. All hoisting and rigging operations shall be consistent with DOE's policy of as-low-as-reasonably achievable (ALARA) radiation exposure per the provisions of 10 CFR 835, Occupational Radiation Protection.

f. Safety of personnel shall remain the first priority.

5.2 HOSTILE ENVIRONMENT PLAN

a. A hostile environment plan shall be prepared by a designated person and shall cover operations, equipment, inspection, testing, and maintenance. See Exhibit I, Hostile Environment Plan, at the end of this chapter.

b. At a minimum, the plan shall be reviewed and approved by responsible DOE contractor management at the facility where the crane, hoist, or other equipment is located and by responsible management of the appropriate DOE contractor oversight organization such as safety or quality assurance.

c. The plan shall address only those actions or features that require deviation from the requirements of this standard due to a hostile environment. At a minimum, it shall contain the following information:

   1. The specific requirements that cannot be met.

   2. The difference between the requirement and actual conditions.

   3. Justification for not meeting this standard's requirements.

   4. A statement of actions or features to be used to compensate for the differences.

   5. Specific maintenance, inspections, and tests to be performed whenever access is possible.

   6. Replacement or retirement criteria for equipment that is designed to operate with little or no maintenance.

d. Detailed operation, inspection, testing, and maintenance procedures that state specific requirements and acceptance criteria shall be prepared, based on the hostile environment plan.

e. The responsible manager shall ensure that the approved hostile environment plan is distributed as follows:

   1. DOE Site Office or equivalent

   2. Equipment operators, maintenance organizations, and other organizations/personnel affected by the plan.

   3. Equipment history file.

f. Hostile environment plans in the equipment history file shall be readily available to appointed personnel.

5.2.1 MARKING AND POSTING

Equipment used under a hostile environment plan shall be posted with the following information: "Special Maintenance and Operating Instructions Required – see Hostile Environment Plan."

5.2.2 INSPECTION AND TESTING

a. Handling fixtures and rigging accessories shall be qualified in accordance with Chapters 11, 12, and 14 ("Wire Rope and Slings," "Rigging Accessories," and "Below-the-Hook Lifting Devices," respectively) of this standard prior to being exposed to the hostile environment.

b. Lifting equipment, slings, rigging accessories and fixtures that have been removed from hostile environments shall be inspected and maintained per the applicable provisions of this standard prior to their reuse outside of hostile environments.

c. Nylon (rope or webbing) slings should not be used in a radiation area unless absolutely necessary. When it is necessary to use a nylon or polyester sling in a radiation area, the responsible manager shall ensure that radiation exposure does not exceed 100,000 rad during the life of the sling.

EXHIBIT I

HOSTILE ENVIRONMENT PLAN

Building:_____ Location:_____

Type crane/hoist:_____
(e.g., overhead top-running bridge and trolley, top-running bridge with underhung hoist, jib crane, monorail hoist, overhead hoist)

Capacity:_____ (Auxiliary):_____

Power method:_____

Manufacturer:_____

1.a H&R standard requirement that will not be met
Section number:_____
(copy the applicable section)
_____
_____
_____

1.b Difference between standard requirement and what is to be allowed by this plan:
_____
_____

1.c Justification for not meeting the standard requirement: _____
_____
_____

1.d Actions or features to compensate for differences: _____
_____

1.e. Actions to be taken (e.g., inspections, maintenance) for lifting equipment, slings, rigging accessories and fixtures that will be removed from hostile environments and subsequently reused to ensure compliance with this standard, applicable regulatory requirements and manufacturer's recommendations prior to their reuse (if applicable):
_____
_____

Include information regarding replacement or retirement criteria for this equipment. Include information regarding any special design, maintenance, or test considerations that apply to this equipment.
_____
_____
_____

APPROVAL (Signature/date)

*Facility Manager: _____Date:_____
*Manager, Oversight Organization: _____Date:_____
Other: _____ Date: _____
_____ Date: _____
_____ Date: _____

*means approval is mandatory

INTENTIONALLY BLANK

CHAPTER 6
PERSONNEL QUALIFICATION AND TRAINING

This chapter describes personnel qualification and training. Only qualified personnel shall operate the equipment covered in this standard.

6.1 GENERAL 6-1

6.2 QUALIFICATION 6-2
6.2.1 General 6-2
6.2.2 Operators of Cab-Operated and Pulpit-Operated Cranes 6-2
6.2.3 Operators of Mobile Cranes 6-2
6.2.4 Operators of Truck Mounted Cranes – Capacity 1 Ton or Less 6-4
6.2.5 Operators of Floor-Operated Cranes and Hoists 6-4
6.2.6 Operators of Remote Operated Cranes 6-4
6.2.7 Operators of Forklift Trucks 6-4
6.2.8 Riggers 6-4
6.2.9 Person-In-Charge (PIC) 6-4
6.2.10 Designated Leader 6-5
6.2.11 Inspectors 6-5
6.2.12 Instructors 6-5
6.2.13 First-Line Supervisors 6-5
6.2.14 Maintenance Personnel 6-5

6.3 TRAINING 6-7
6.3.1 General 6-7
6.3.2 Operators of Cab-Operated, Pulpit-Operated, and Floor-Operated Cranes 6-7
6.3.3 Mobile Crane Operators 6-8
6.3.4 Operators of Truck Mounted Cranes – Capacity 1 Ton or Less 6-8
6.3.5 Forklift Truck Operators 6-8
6.3.6 Riggers 6-10
6.3.7 Inspectors 6-10
6.3.8 Instructors 6-11
6.3.9 Maintenance Personnel 6-11

6.4 REQUALIFICATION 6-12

6.5 RECORDS 6-13

INTENTIONALLY BLANK

6.1 GENERAL

a. This chapter delineates the requirements for the qualification and training of operators, riggers, inspectors, maintenance personnel, trainers, person-in-charge (PIC), designated leaders, and first-line supervisors.

b. Personnel who are designated to operate equipment or perform work covered by this standard shall be qualified and trained to the level of proficiency consistent with assigned tasks.

6.2.1 GENERAL

Only qualified personnel or trainees, under the direct supervision of qualified personnel, who meet the following requirements shall be allowed to rig, operate, inspect, or perform maintenance on cranes, hoists, or powered forklift trucks:

a. Be at least 18 years old.

b. Understand spoken and written English or a language generally in use at the work location.

c. At the site's discretion, crane operator certification by the National Commission for the Certification of Crane Operators (NCCCO), an OSHA recognized certification body or a state licensing agency may be used to verify compliance with qualification requirements described hereunder for covered classes of equipment.

6.2.2 OPERATORS OF CAB-OPERATED AND PULPIT-OPERATED CRANES

a. Operators and operator trainees shall meet the following physical qualifications.

1. Have vision of at least 20/30 Snellen in one eye and 20/50 in the other, with or without corrective lenses. Operators whose jobs do not require binocular vision (operation of cranes with television cameras or periscope optics) shall have distant visual acuity of 20/30 in one eye and no specific visual requirement for the other eye.

2. Be able to distinguish colors, regardless of position, if color differentiation is required for operation.

3. Have adequate hearing, with or without a hearing aid, for specific operation.

4. Have physical strength, coordination, and sufficient reaction speed to meet the demands of equipment operation.

5. Show no evidence of physical defects or of emotional instability that could be a hazard to themselves or others, or which, in the opinion of the examiner, could interfere with their safe performance; such evidence may be sufficient cause for disqualification. In these cases, medical judgments and tests may be required.

6. Show no evidence of being subject to seizures or to loss of physical control; such evidence shall be sufficient reason for disqualification. Medical examinations may be required to determine these conditions.

7. Have normal depth perception, field of vision, manual dexterity, coordination, and no tendencies to dizziness or similar potentially hazardous characteristics.

8. Have no detectable or known disease or physical restriction that would render them incapable of safely operating equipment or carrying out rigging duties. Where any deficiency of an upper or lower extremity exists, the acceptability of a candidate shall be the decision of the supervisor, after consulting with the designated physician.

b. Operators shall be required by the employer to satisfactorily pass a written examination covering operational characteristics, controls, and emergency control skills.

c. Operators shall be required by the employer to pass a practical operating skill evaluation. Qualification shall be limited to the type of equipment for which the operator is being evaluated. The actual or simulated operation shall enable trainees to demonstrate basic knowledge and skills at a level that ensures the safety of personnel and equipment.

6.2.3 OPERATORS OF MOBILE CRANES

a. Operators and operator trainees shall meet the following physical qualifications:

1. Have vision of at least 20/30 Snellen in one eye and 20/50 in the other, with or without corrective lenses.

2. Be able to distinguish colors, regardless of position, if color differentiation is required for operation.

3. Have adequate hearing, with or without a hearing aid, for a specific operation.

4. Have physical strength, coordination, and sufficient reaction speed to meet the demands of equipment operation.

5. Show no evidence of physical defects or of emotional instability that could be a hazard to themselves or others, or which, in the opinion of the examiner, could interfere with their safe performance; such evidence may be sufficient cause for disqualification. In these cases, medical judgments and tests may be required.

6. Show no evidence of being subject to seizures or to loss of physical control; such evidence shall be sufficient reason for disqualification. Medical examinations may be required to determine these conditions.

7. Have normal depth perception, field of vision, manual dexterity, coordination, and no tendencies to dizziness or similar potentially hazardous characteristics.

8. Have no detectable or known disease or physical restriction that would render them incapable of safely operating equipment or carrying out rigging duties. Where any deficiency of an upper or lower extremity exists, the acceptability of a candidate shall be the decision of the supervisor, after consulting with the designated physician.

9. Shall successfully pass with a negative result, a substance abuse test. The level of testing will be determined by the standard practice for the industry where the crane is employed and this test shall be confirmed by a recognized laboratory service.

10. Operator physical examinations shall be required every three years or more frequently if supervision deems it necessary.

b. Operators shall be required by the employer to satisfactorily pass a written examination covering operational characteristics, controls, and emergency control skills such as response to:

    1. Fire.

    2. Power line contact.

    3. Loss of stability.

    4. Control malfunction.

    5. As well as characteristic and performance questions appropriated to the crane type for which qualifications is sought.

c. Operators shall demonstrate their ability to read, write, comprehend and exhibit arithmetic skills and load/capacity chart usage, in the language of the crane manufacturer's operation and maintenance instruction materials.

d. Operators shall satisfactorily complete a combination written and verbal test on load/chart usage that covers a selection of the configurations (the crane may be equipped to handle) for the type crane for which qualification is being sought.

e. The operator shall complete a practical operating skill evaluation test (actual or simulated), demonstrating proficiency and basic knowledge in handling the specific type crane for which the operator is being evaluated, including:

    1. Pre-start and post-start inspection.

    2. Maneuvering skills.

    3. Shutdown.

    4. Securing the crane.

    5. Ability to use and respond to signals as found in Figure 9-6.

f. Qualification shall be limited to the type of equipment for which the operator is being evaluated.

g. Trainee qualification requirements shall include, but are not limited to the following:

1. Satisfactory completing of a written examination covering safety, operational characteristics and limitations, and controls of the type crane for which they are being qualified.

2. Demonstrate their ability to read, write, comprehend, and exhibit arithmetic skills and load/capacity chart usage, in the language of the crane manufacturer's operations and maintenance instruction materials.

3. Satisfactory completion of a combination written and verbal test on load/capacity chart usage covering various crane configurations.

6.2.4 OPERATORS OF TRUCK MOUNTED CRANES – CAPACITY 1 TON OR LESS

a. Physical qualifications shall be based on specific job requirements.

b. Operators shall be required by their employer to pass a practical operating skill evaluation. Qualification shall be limited to the type of equipment for which the operator is being evaluated.

6.2.5 OPERATORS OF FLOOR-OPERATED CRANES AND HOISTS

a. Physical qualifications shall be based on specific job requirements.

b. Operators shall be required by their employer to pass a practical operating skill evaluation. Qualification shall be limited to the type of equipment for which the operator is being evaluated.

c. The actual or simulated operation shall enable operators to demonstrate basic knowledge and skills at a level that ensures the safety of personnel and equipment.

6.2.6 OPERATORS OF REMOTE OPERATED CRANES

a. The use of remote-controlled equipment involves such a wide variety of service requirements and conditions that each installation should be carefully analyzed and operation reviewed to determine whether sections 6.2.2.a or 6.2.5.a should apply.

b. Operators shall be required by the employer to satisfactorily pass a written examination covering operational characteristics, controls, and emergency control skills.

c. Operators shall be required by their employer to pass a practical operating skill evaluation. Qualification shall be limited to the type of equipment for which the operator is being evaluated.

d. The actual or simulated operation shall enable operators to demonstrate basic knowledge and skills at a level that ensures the safety of personnel and equipment.

6.2.7 OPERATORS OF FORKLIFT TRUCKS

a. Physical qualifications shall be based on specific job requirements.

b. Operators shall be required by the employer to pass a practical operating skill evaluation. Qualification shall be limited to the type of forklift for which the operator is being evaluated.

c. The actual or simulated operation shall enable operators to demonstrate basic knowledge and skills at a level that ensures the safety of personnel and equipment.

6.2.8 RIGGERS

Riggers shall be required to pass a practical rigging skill evaluation that requires the use of rigging equipment in safe configurations. The actual or simulated operation shall enable personnel to demonstrate basic knowledge and skills at a level that ensures the safety of personnel and equipment.

6.2.9 PERSON-IN-CHARGE (PIC)

The PIC shall have the necessary knowledge and experience of the specific type of equipment and completion of the operation. The PIC shall understand the rules and procedures implemented at the site to ensure that the following are completed:

a. Necessary administrative requirements.

b. Personnel assignments and responsibilities.

c. Selection of proper equipment/tools.

d. Recognition and control of hazardous or unsafe conditions.

e. Job efficiency and safety.

f. Critical-lift documentation.

In addition, the PIC shall:

a. Direct operations in the case of an accident.

b. Exercise authority to start and stop work activities.

6.2.10 DESIGNATED LEADER

The designated leader shall have sufficient knowledge and experience to accomplish the following responsibilities:

a. Ensure that personnel involved understand how the lift is to be made.

b. Ensure that the weight of the load is determined and that proper equipment and accessories are selected.

c. Survey the lift site for hazardous or unsafe conditions.

d. Ensure that equipment is properly set up and positioned.

e. Ensure that a signaler is assigned, if required, and is identified to the operator.

f. Direct the lifting operation to ensure that the job is done safely and efficiently.

g. Stop the job when any potentially unsafe condition is recognized.

h. Direct operations if an accident or injury occurs.

6.2.11 INSPECTORS

a. Qualified inspectors shall have the necessary knowledge, training and experience to properly inspect hoisting and rigging equipment.

b. Employees who operate cranes to perform crane inspections shall be trained and qualified to operate the crane on which the inspection is being performed. See general and crane specific qualification requirements in Section 6.2., "Qualification."

c. Crane operation by crane inspectors shall be limited to those crane functions necessary to perform the inspection on the crane.

6.2.12 INSTRUCTORS

Instructors responsible for developing or presenting hoisting and rigging training programs shall meet the qualification standards specified by the responsible training organization.

6.2.13 FIRST-LINE SUPERVISORS

The first-line supervisor of hoisting and rigging operations should be knowledgeable of the specific types of hoisting and rigging operations under their supervision and their operational hazards. The supervisor shall be familiar with applicable rules and procedures implemented at the site to ensure that hoisting and rigging work under their control is done efficiently and safely, with safety as top priority. Supervisors should ensure that employees fully understand the importance of safety and that they recognize their own authority and responsibility to stop work when safety is questionable.

6.2.14 MAINTENANCE PERSONNEL

a. Employees who operate cranes to perform crane maintenance shall be trained and qualified to operate the cranes on which maintenance is being performed.

b. Crane operation by maintenance personnel shall be limited to those crane functions necessary to perform maintenance on the

crane or to verify the performance of the crane after maintenance has been performed.

c. Employees who perform maintenance activities on equipment covered by this standard should have an understanding of the following criteria:

1. The tools to safely accomplish their work.

2. Access to operating instructions to perform adjustments.

3. Parts information furnished by the manufacturer or the responsible maintenance/engineering organization.

4. Manufacturers' recommendations as to points and frequency of lubrication and levels and types of lubricant to be used.

5. Maintenance and repair procedures recommended by the manufacturer or responsible maintenance/engineering organization.

6. Wiring diagrams.

7. Documentation requirements for maintenance and repair.

6.3.1 GENERAL

a. Organizations that employ personnel who operate, rig, inspect, or perform maintenance on equipment covered in this standard shall provide training programs, including a means of evaluation, to ensure that the personnel are competent to perform the operations. This training shall also include applicable site-specific hoisting and rigging procedures which address abnormal or emergency operations as well possible equipment failure.

b. The training organization shall use training methods best suited for the students and the subject material. This may include, but is not limited to, computer-aided training, classroom training, simulated field training, on-the-job training (OJT), and training by equipment manufacturer or commercial training companies.

c. Score standards shall be set for each examination by the training organization. The minimum passing score will depend on the subject, testing technique, and test difficulty. Management shall determine the course of action for persons receiving negative evaluations.

6.3.2 OPERATORS OF CAB-OPERATED, PULPIT-OPERATED, AND FLOOR-OPERATED CRANES

a. Only qualified and authorized operators or operator trainees under the direct supervision of a qualified operator shall be permitted to operate cab-operated, pulpit-operated, and floor-operated cranes.

b. The initial training of operators shall include:

1. Applicant training on equipment for which qualification is sought, under the direction of a qualified operator or instructor who is designated by management to instruct in the operation of hoisting equipment.

2. Instructor review of the applicant's knowledge, including results of written and oral evaluation, and witnessing a demonstration of the operator's skills.

c. Operators should be able to demonstrate a knowledge of equipment operating characteristics, capabilities, limitations, effects of variables, safety features, and operating procedures. The following checklist contains basic factors with which an operator should be familiar. This checklist must be tailored to suit actual conditions.

1. Operating characteristics.
2. Environmental hazards – weather.
3. Electrical hazards.
4. Traveling with load.
5. Traveling without load.
6. Lifting personnel.
7. Inspections/tests.
8. Load weight estimation.
9. Emergency procedures.
10. Rigging.
11. Lessons learned.
12. Hand signals.
13. Load dynamics.
14. Applicable standards and regulations.
15. Critical lifts.
16. Safety features of equipment.
17. Terminology and definitions.
18. Ropes and reeving.
19. Two-blocking.
20. Records and documents.
21. Limit switches, warning signals.
22. Operating practices.
23. Fire protection.

24. Crane components.

25. Access and egress.

26. Warning devices.

6.3.3 MOBILE CRANE OPERATORS

a. Only qualified and authorized operators or operator trainees under the direct supervision of a qualified operator shall be permitted to operate mobile cranes.

b. Operators shall meet the criteria specified in paragraphs 6.3.2.b and c, and they should also be able to demonstrate an understanding of the following:

1. Stability.

2. Load charts.

3. Crane setup.

4. Refueling.

5. Lifting operations involving multiple cranes.

6. Assembly and disassembly.

7. Outriggers.

8. Operator aids.

6.3.4 OPERATORS OF TRUCK MOUNTED CRANES – CAPACITY 1 TON OR LESS

a. Only qualified and authorized operators or operator trainees under the direct supervision of a qualified operator shall be permitted to operate truck mounted cranes – capacity 1 ton or less.

b. The initial training of operators shall include applicable training on equipment for which qualification is sought, under the direction of a qualified operator or instructor.

c. Instructor review of the applicant's knowledge shall include results of written and/or oral evaluation, and witnessing a demonstration of the operator's skills.

d. Operators should be able to demonstrate knowledge of equipment operating characteristics, capabilities, limitations, effects of variables, safety features, and operating procedures.

6.3.5 FORKLIFT TRUCK OPERATORS

a. Only qualified and authorized operators shall be permitted to operate powered forklift trucks. Operator trainees may operate powered forklift trucks under the direct supervision of a qualified operator or trainer and only where such operation does not endanger the trainee or other employees.

b. The initial training of operators shall include:

1. A combination of formal instruction (e.g., lecture, discussion, interactive computer learning, videotape, written material).

2. Practical training (demonstrations performed by the trainer and practical exercises performed by the trainee).

3. Evaluation of the operator's performance in the workplace including results of written and oral evaluation, and witnessing a demonstration of the operator's skills.

c. The following checklist contains basic factors with which a forklift truck operator should be familiar. This checklist must be tailored to suit actual conditions.

1. Operating instruction, warnings, and precautions for the type of forklift truck the operator will be authorized to operate.

2. Differences between the forklift truck and the automobile.

3. Forklift truck controls and instrumentation:

i. Where they are located.

ii. What they do.

iii. How they work.

4. Engine or motor operation.

5. Steering and maneuvering.

6. Visibility, including restrictions due to loading.

7. Fork and attachment adaptation, operation, and use limitations.

8. Forklift truck capacity and load weight determination.

9. Forklift truck stability and load dynamics.

10. Forklift truck inspections and maintenance that the operator will be required to perform.

11. Refueling and/or charging and recharging of batteries.

12. Operating limitations.

13. Any other operating instructions, warning, or precautions listed in the operator's manual for the type of forklift truck that the employee is being trained to operate.

14. Traveling with and without a load.

15. Lifting personnel.

16. Emergency procedures.

17. Lessons learned.

18. Hand signals.

19. Applicable standards and regulations.

20. Critical lifts.

21. Modifications.

22. Terminology and definitions.

23. Records and documents.

24. Operating practices.

25. Fire protection.

d. The following checklist contains basic factors with which a forklift operator should be familiar as they relate to workplace topics.

    1. Surface conditions where the forklift will be operated.

    2. Composition of loads to be carried and load stability.

    3. Load manipulation, stacking, and unstacking.

    4. Pedestrian traffic in areas where the forklift will be operated.

    5. Narrow aisles and other restricted places where the forklift will be operated.

    6. Hazardous (classified) locations where the forklift will be operated.

    7. Ramps and other sloped surfaces that could affect the forklift's stability.

    8. Closed environments and other areas where insufficient ventilation or poor vehicle maintenance could cause a buildup of engine exhaust, gasoline or diesel.

    9. Other unique or potentially hazardous environmental conditions in the workplace that could affect safe operation.

e. Refresher training in relevant topics shall be provided to the operator when:

    1. The operator has been observed to operate the forklift truck in an unsafe manner.

    2. The operator has been involved in an accident or near-miss incident.

    3. The operator has received an evaluation that reveals that the operator is not operating the forklift truck safely.

    4. The operator is assigned to drive a different type of forklift truck.

5. A condition in the workplace changes in a manner that could affect the safe operation of the forklift truck.

6.3.6 RIGGERS

a. Training programs for riggers should address two levels of required performance:

   1. Persons who may perform rigging functions as an incidental part of their normal work assignment.

   2. Persons whose principal assignment is the performance of rigging work.

b. Only qualified and authorized riggers or rigger trainees under the direct supervision of a qualified rigger shall be permitted to perform rigging functions.

c. Initial training of riggers shall include the instructor's review of the applicant's knowledge, including results of written or oral evaluation, and witnessing a demonstration of the rigger's skills. The following checklist contains basic factors with which a rigger should be familiar. This checklist must be tailored to suit actual conditions.

   1. Stability (equipment).

   2. Operating characteristics of equipment.

   3. Environmental hazards – weather.

   4. Electrical hazards.

   5. Traveling with load/load control.

   6. Lifting personnel.

   7. Inspection/tests.

   8. Load weight estimation.

   9. Emergency procedures.

   10. Rigging equipment selection.

   11. Lessons learned.

   12. Hand signals.

   13. Lifting operations involving multiple cranes.

   14. Maintenance/storage of slings and rigging components.

   15. Assembly and disassembly.

   16. Load dynamics.

   17. Applicable standards and regulations.

   18. Critical lifts.

   19. Safety features of equipment.

   20. Terminology and definitions.

   21. Ropes and reeving.

   22. Records and documentation.

   23. Adjustments and repairs.

   24. Rigging/operating practices.

   25. Sling loading.

   26. Load-indicating devices.

   27. Personal protective equipment.

   28. Below-the-hook lifting devices.

   29. Rigging or hitch configuration.

   30. D/d ratio.

   31. Sling types and application.

6.3.7 INSPECTORS

a. Employees who perform required, documented inspections of equipment covered by this standard shall receive inspector training.

b. Inspector training shall include basic inspection techniques and acceptance/rejection criteria as specified in this standard and other applicable sources. See Chapter 3, "Preengineered Production Lifts."

c. The following equipment categories for general inspection are examples that should be considered:

   1. Overhead, gantry, and polar cranes.

   2. Monorail, jib, and other hoists.

   3. Mobile cranes (hydraulic and lattice boom).

   4. Forklift trucks.

   5. Wire-rope, chain, and synthetic-web slings.

   6. Rigging accessories.

d. Employees who operate cranes to perform crane inspections shall be trained and qualified to operate the crane on which the inspection is being performed.

6.3.8 INSTRUCTORS

a. Instructors designated by management to be responsible for developing or presenting hoisting and rigging training programs shall develop technical competence by becoming familiar with the requirements of this standard and by satisfactorily completing documented training or technical experience in the hoisting and rigging discipline.

b. Instructors should attend recognized training courses, workshops, or seminars in order to remain current on industry practices and changes in applicable codes and standards.

6.3.9 MAINTENANCE PERSONNEL

a. Employees who operate cranes to perform crane maintenance shall be trained and qualified to operate the cranes on which maintenance is being performed.

6.4 REQUALIFICATION

a. Operator, rigger, and inspector qualification is for a period not to exceed 3 years, unless the qualification is revoked sooner by the employee's manager.

b. The program for requalification shall include:

1. Completion of a written or oral evaluation relevant to the type of equipment used or participation in a refresher training program.

2. A performance evaluation.

6.5 RECORDS

A record of training and skill evaluations shall be kept on file and shall be readily available.

CHAPTER 7
OVERHEAD AND GANTRY CRANES

This chapter specifies operation, inspection, maintenance, and testing requirements for the use of overhead and gantry cranes and implements the requirements of ASME B30.2 ["Overhead and Gantry Cranes (Top-Running Bridge, Single or Multiple Girder, Top-Running Trolley Hoist)"], B30.11 ("Monorail Systems and Underhung Cranes"), and B30.17 ["Overhead and Gantry Cranes (Top-Running Bridge, Single Girder, Underhung Hoist")] (for latest ASME standards, see http://catalog.asme.org/home.cfm?Category=CS).

7.1 GENERAL 7-1
- 7.1.1 Operator Training/Qualification 7-1
- 7.1.2 Rated-Load Marking 7-1
- 7.1.3 Modification 7-1
- 7.1.4 Egress 7-1
- 7.1.5 Rail Sweeps 7-1
- 7.1.6 Hoist Brakes 7-1
- 7.1.7 Power Shutoff 7-1
- 7.1.8 Hoist-Limit Switch 7-5
- 7.1.9 Markings 7-5
- 7.1.10 Load Limits 7-5
- 7.1.10 Maintenance History 7-5

7.2 INSPECTIONS 7-6
- 7.2.1 General 7-6
- 7.2.2 Crane Service 7-6
- 7.2.3 Initial Inspection 7-6
- 7.2.4 Daily Preoperational Check 7-6
- 7.2.5 Monthly Rope, Chain and Hook Inspection 7-6
- 7.2.6 Frequent Inspection 7-7
- 7.2.7 Periodic Inspection 7-7
  - 7.2.7.1 Cranes 7-7
  - 7.2.7.2 Wire Rope 7-8
  - 7.2.7.3 Chain (Welded Link) 7-9
  - 7.2.7.4 Chain (Roller) 7-10
- 7.2.8 Cranes Not in Regular Service 7-11

7.3 TESTING 7-12
- 7.3.1 Operational Tests 7-12
- 7.3.2 Rated Load Test 7-12

7.4 MAINTENANCE 7-14
- 7.4.1 Operating Equipment 7-14
- 7.4.2 Wire-Rope Maintenance 7-14

7.5 OPERATION 7-15
- 7.5.1 Conduct of Operator 7-15
- 7.5.2 Hoist-Limit Switch/Device 7-15
- 7.5.3 Standard Hand Signals 7-16
- 7.5.4 Identification of Signalers 7-16
- 7.5.5 Size of Load 7-16
- 7.5.6 Attaching the Load 7-16
- 7.5.7 Moving the Load 7-16
- 7.5.8 Ordinary Lifts 7-18
- 7.5.9 Planned Engineered Lifts 7-18

7.5.10 Critical Lifts 7-19

EXHIBIT I Bridge, Wall, Gantry Crane Load Test 7-22
EXHIBIT II Overhead Crane Pre-Operational Checklist 7-26
EXHIBIT III Overhead Crane Periodic Inspection Report (Mechanical) 7-28
EXHIBIT IV Overhead Crane Periodic Inspection Report (Electrical) 7-30

7.1 GENERAL

Overhead and gantry cranes include top-running single- or multiple-girder bridge with top-running trolley hoists (Figure 7-1), top-running single-girder bridge with underhung trolley hoists (Figure 7-2), and monorails/underhung cranes (Figure 7-3).

7.1.1 OPERATOR TRAINING/QUALIFICATION

Operators of overhead cranes shall be trained and qualified as required in Chapter 6, "Personnel Qualification and Training."

7.1.2 RATED-LOAD MARKING

The rated capacity shall be marked on each side of the crane. If the crane has more than one hoisting unit, each hoist shall have its rated capacity marked on it or on its load block. Markings on the bridge, trolley, and load block shall be legible from the ground or floor.

7.1.3 MODIFICATION

Cranes may be modified or rerated provided that the modifications or supporting structures are analyzed thoroughly by the crane manufacturer or a qualified engineer. Modifications and reratings must be approved by the cognizant engineering organization. A rerated crane, or one whose load-supporting components have been modified, shall be tested in accordance with Section 7.3, "Testing." The new rated capacity shall be displayed in accordance with Section 7.1.2, "Rated-Load Marking."

7.1.4 EGRESS

On cab-operated cranes, there shall be at least two means of egress from the crane, remote from each other, and arranged to permit departure under emergency conditions.

7.1.5 RAIL SWEEPS

Bridge trucks shall be equipped with sweeps which extend below the top of the rail and project in front of the truck wheels.

7.1.6 HOIST BRAKES

a. Each independent hoisting unit shall be equipped with at least one holding brake applied directly to the motor shaft or some part of the gear train.

b. Each independent hoisting unit (except worm-geared hoists, the angle of whose worm prevents the load from accelerating as it is being lowered) shall be equipped with a controlled-braking means in addition to the holding brake to control speed of lowering.

c. Holding brakes on hoists shall be applied automatically when power is removed.

7.1.7 POWER SHUTOFF

a. The power supply for the runway conductors shall be controlled by a switch or circuit-breaker located on a fixed structure, accessible from the floor, and capable of being locked in the OPEN position.

b. On cab-operated cranes, an enclosed switch or circuit-breaker (with provisions for locking in the OPEN position) shall be provided in the leads from the runway conductors. A means of opening this device shall be located within reach of the operator when the operator is in the operating position. When the operator opens this switch or circuit-breaker, the holding brakes should set.

c. On floor, remote, or pulpit-operated cranes, an enclosed disconnect device shall be provided in the leads from the runway conductors. This device shall be mounted on the bridge or footwalk near the runway collectors. There shall be provisions for locking the device in the OPEN position unless the crane is the only load on a lockable switch or circuit breaker that is accessible from the floor. One of the following types of floor, remote, and pulpit-operated disconnects shall be provided.

   1. A nonconductive rope attached to the main disconnect device on a floor-operated crane. If this is selected, the rope shall be suspended adjacent to the

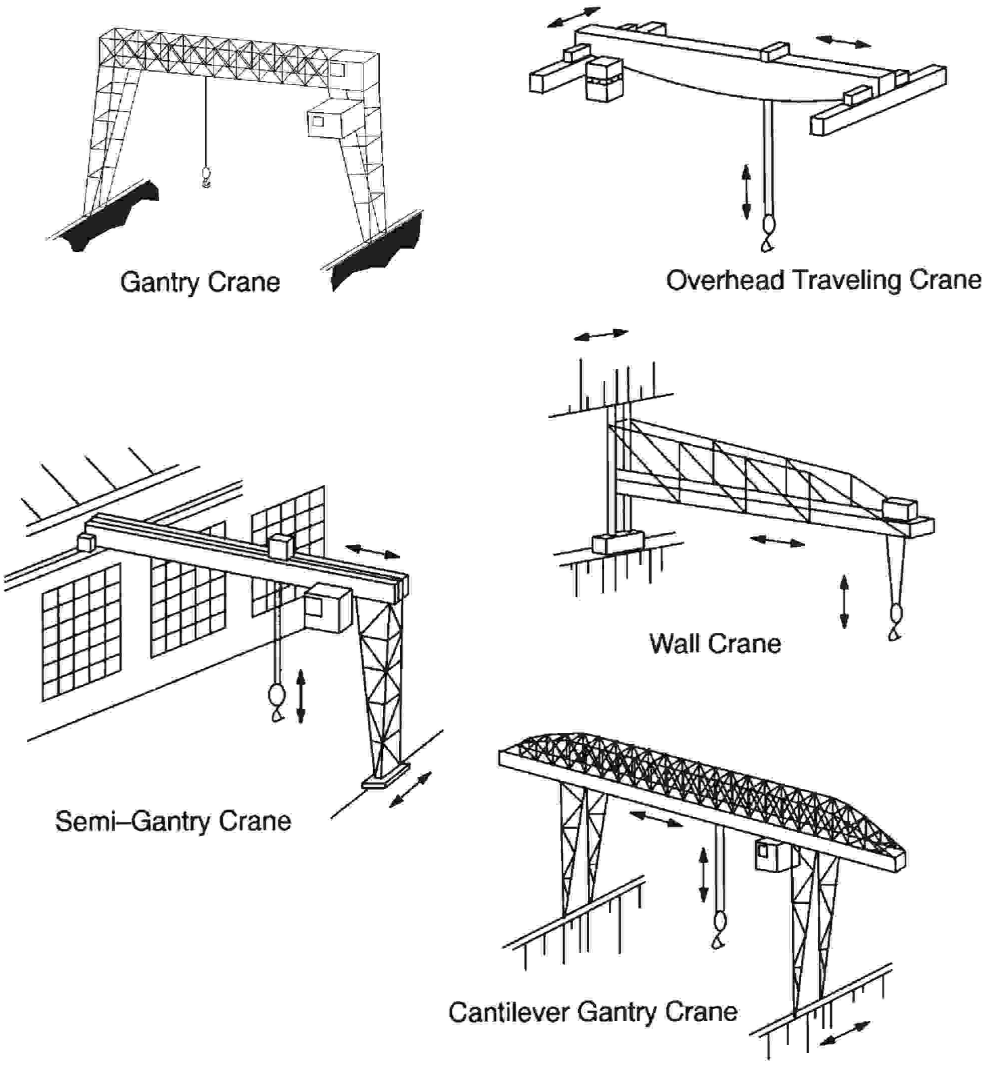

Reprinted from ASME B30.2-2005 by permission of The American Society of Mechanical Engineers. All rights reserved.

Figure 7-1. Top-running single- or multiple-girder bridge with top-running trolley hoist

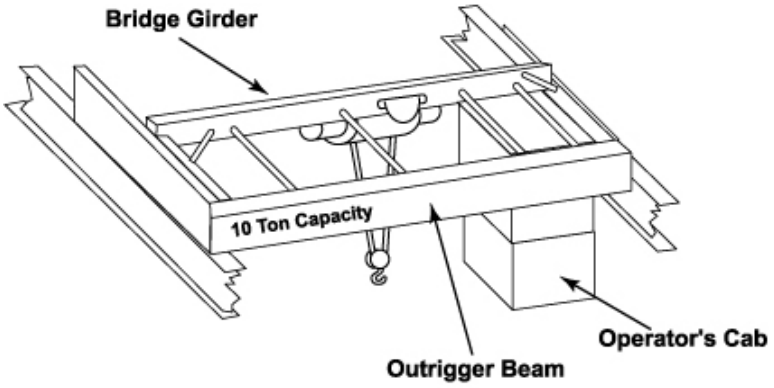

Overhead Cab-Operated Crane

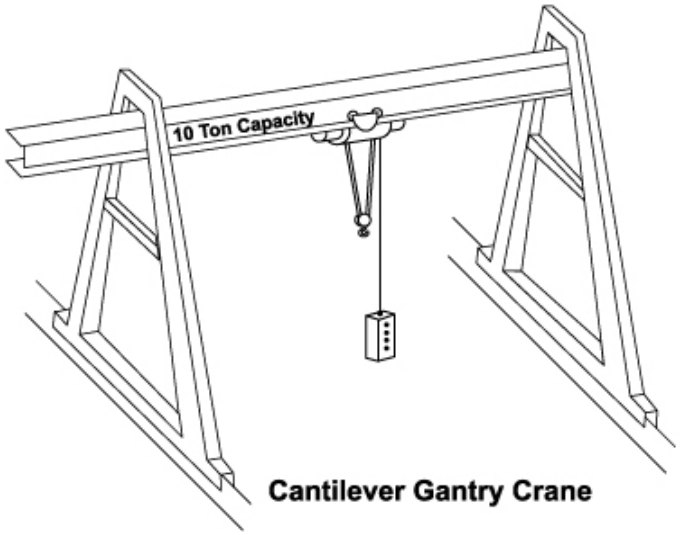

Cantilever Gantry Crane

Reprinted from ASME B30.17-2006 by permission of The American Society of Mechanical Engineers. All rights reserved.

Figure 7-2. Top-running single-girder bridge with underhung trolley hoist.

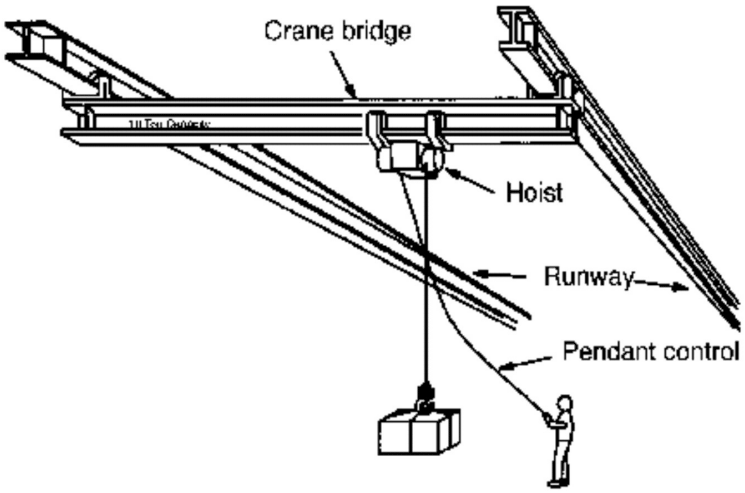

Floor–operated crane

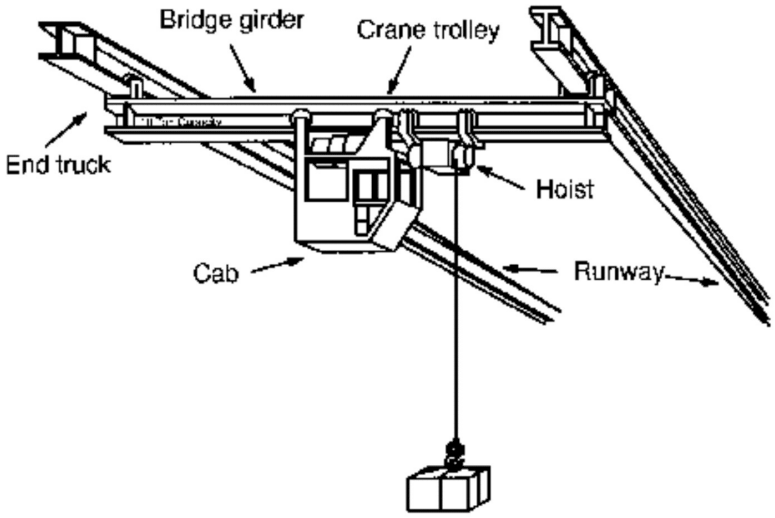

Cab–operated crane

Reprinted from ASME B30.11-2004 by permission of The American Society of Mechanical Engineers. All rights reserved.

Figure 7-3. Monorails and underhung cranes.

.

operating ropes if manual controllers are used, or near the pendant push-button station if magnetic controls are used.

2. An under-voltage trip for a main circuit breaker, operated by an emergency stop button in the pendant push-button station or the pulpit.

3. A main-line contactor operated by a switch or push button on the pendant push-button station, the remote-control station, or the pulpit.

7.1.8 HOIST-LIMIT SWITCH

a. The hoisting motion of all cranes shall have an overtravel limit switch/device in the hoisting direction to stop the hoisting motion.

b. Lower-travel limit switches/devices should be provided for all hoists where the load block enters pits or hatchways in the floor.

7.1.9 MARKINGS

a. The arrangement of pendant push-buttons stations and radio-control transmitters should conform to Fig. 7.4. Compass directions, "right-left" and "forward-reverse," or other indicators may be substituted for W, X, Y, and Z in Figure 7-4.

b. Master switches shall be labeled to indicate their function.

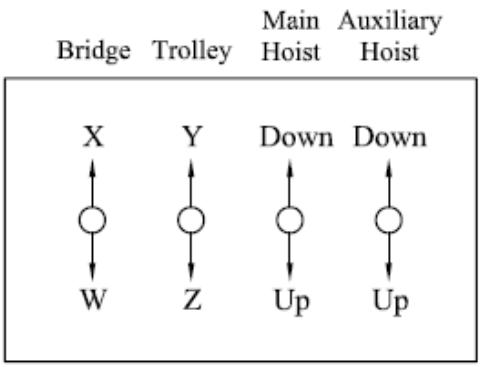

Reprinted from ASME B30.2-2005 by permission of The American Society of Mechanical Engineers. All rights reserved.

Figure 7-4 Typical Pendant Push Button Station

7.1.10 LOAD LIMITS

The crane shall not be loaded beyond its rated capacity except for test purposes, as described in Section 7.3.

7.1.11 MAINTENANCE HISTORY

The maintenance history of the crane shall be retained throughout its service life.

7.2 INSPECTIONS

7.2.1 GENERAL

There shall be no apparent damage, excessive wear, or deformation of any load-bearing part of the equipment. Brakes shall work satisfactorily and load brakes shall be designed to hold any load up to at least 125 percent of the rated capacity of the equipment without slipping or overheating. All safety devices, load indicators, controls, and other operating parts of the equipment shall be checked during each inspection and shall be in good working order. Parts found to be defective during any inspection or nondestructive examination shall be replaced or repaired as directed by the responsible line manager or that person's designated representative.

7.2.2 CRANE SERVICE

Crane service is defined as follows:

a. Normal service – operating at less than 85 percent of rated load and not more than 10 lift cycles/hr except for isolated instances.

b. Heavy service – operating at 85 to 100 percent of rated load or in excess of 10 lift cycles/hr as a regular specified procedure.

c. Severe service – operating at normal or heavy service under abnormal operating conditions (i.e., extreme temperatures, corrosive atmospheres).

7.2.3 INITIAL INSPECTION

Prior to their initial use, all new, reinstalled, modified, or repaired cranes shall be inspected by a qualified inspector to ensure compliance with applicable provisions of this chapter. Inspections of repaired and modified cranes may be limited to the provisions affected by the alteration, repair, or modification as determined by a qualified person. Dated and signed inspection reports shall be kept on file and shall be readily available.

7.2.4 DAILY PREOPERATIONAL CHECK

a. Operators or other designated personnel shall visually inspect at a minimum the following items each day or prior to first use if the hoist has not been in regular service (records are not required):

   1. All functional operating mechanisms for maladjustment interfering with proper operation.

   2. Deterioration or leakage in lines, tanks, valves, drain pumps, and other parts of air or hydraulic systems.

   3. Hooks for cracks, deformation, latch engagement (if provided), and damage from chemicals (see Chapter 13, *"Load Hooks,"* for additional hook requirements).

   4. Hoist rope for significant wear, kinking, crushing, birdcaging, corrosion, or broken strands or wires.

   5. Hoist chains, including end connections, for excessive wear, twist, distorted links interfering with proper function, or stretch beyond manufacturer's recommendations.

   6. Primary hoist upper-limit device for proper operation.

b. Operators or other designated personnel shall examine deficiencies and determine whether the equipment should be removed from service or if a more detailed inspection is required.

7.2.5 MONTHLY ROPE, CHAIN, AND HOOK INSPECTION

a. On a monthly basis, a designated person shall thoroughly inspect the following items for damage, wear, or other deficiencies that might reduce capacity or adversely affect the safety of the crane:

1. This shall be accomplished by lowering the hook block to its lowest position and examining for any condition that could result in an appreciable loss of strength.

2. Hoist rope, including end connections, for significant wear, kinking, crushing, birdcaging, corrosion, broken strands or wires.

3. Hoist chains, including end connections, for excessive wear, twist, distorted links interfering with proper function, or stretch beyond manufacturer's recommendations.

4. Hooks for cracks, deformation, damage from chemicals, and evidence of heat damage. The hook attachment and securing means should also be checked. (See Chapter 13, *"Load Hooks,"* for additional hook requirements).

5. Signed and dated inspections records shall be kept on file and shall be readily available.

b. Before the crane is returned to service, deficiencies that could reduce its capacity or adversely affect its safety shall be corrected.

7.2.6 FREQUENT INSPECTION

a. Operators or other designated personnel shall visually inspect the crane at the following intervals (records are not required):

1. Normal service – monthly.

2. Heavy service – weekly to monthly.

3. Severe service – daily to weekly.

b. In addition to the requirements of Section 7.2.4, "Daily Preoperational Check," these inspections shall include the following:

1. Hoist braking system for proper operation.

2. Rope or chain reeving for compliance with hoist manufacturer's recommendations.

3. Operating mechanisms for proper operations, proper adjustment, unusual sounds, or excessive wear.

c. Operators or other designated personnel shall examine deficiencies and determine whether the equipment should be removed from service or if a more detailed inspection is required.

7.2.7 PERIODIC INSPECTION

a. A qualified inspector shall perform a complete inspection at the following intervals:

1. Normal service – yearly.

2. Heavy service – Semiannually to annually, dependant upon the nature of the crane's critical components and the degree of their exposure to wear or deterioration.

3. Severe service –Monthly to quarterly.

b. The qualified inspector shall examine deficiencies and determine whether they constitute a safety hazard and whether the crane should be removed from service until it is repaired.

c. Dated and signed inspection records shall be kept on file and shall be readily available.

d. A sample load test form is included as Exhibit I, which appears at the end of this chapter. This form is intended to be a sample only and is not intended to be mandatory.

7.2.7.1 Cranes

In addition to the requirements of Section 7.2.6, "Frequent Inspections," periodic inspections shall include the following:

a. Components for deformation, cracks, or corrosion.

b. Bolts, rivets, nuts, and pins for being loose or absent.

c. Check for suspect/counterfeit parts (see Terminology and Definitions, Chapter 1).

d. Sheaves and drums for cracks or wear.

e. Parts such as pins, bearings, shafts, gears, rollers, locking and clamping devices, bumpers, and stops for wear, cracks, or distortion.

f. Brake-system parts, linings, pawls, and latches for excessive wear.

g. Load, wind, and other indicators over their full range for any significant inaccuracies.

h. Gasoline, diesel, electric, or other power plants for improper performance or noncompliance with other applicable standards.

i. Chain-drive sprockets for excessive wear and chains for excessive stretch.

j. Electrical apparatus for signs of pitting or any deterioration of controllers, master switches, contacts, limit switches, and push-button stations (not limited to these items).

k. Hooks for damage from chemicals, deformation, cracks, any visible apparent bend or twist from the plane of the unbent hook, or any distortion causing an increase in throat opening of 5% not to exceed 1⁄4 in. unless otherwise recommended by the manufacturer. See Chapter 13 for additional hook requirements.

l. Hook retaining nuts or collars and pins, welds, or riveting used to secure the retaining members for soundness.

m. Nondestructive examination of hooks, welds, bearings, or other suspect load-bearing parts when required by the inspector.

n. Testing of motion limit devices, which interrupt power or cause a warning to be activated, for proper performance (each motion shall be inched or operated at low speed into the limit device with not load on the crane).

o. All function, instruction, caution, and warning labels or plates for legibility.

7.2.7.2 Wire Rope

a. A qualified inspector shall inspect all ropes at least annually. This inspection shall include examination of the entire length of the rope, without detaching it from the hoist drum. More frequent intervals shall be determined by a qualified person, and shall be based on such factors as expected rope life as determined by experience on the particular installation or similar installations, severity of environment, percentage of capacity lifts, frequency rates of operation, and exposure to shock loads. The qualified inspector shall carefully note any deterioration such as described below resulting in appreciable loss of original strength and determine whether further use of the rope constitutes an acceptable risk.

   1. Reduction of rope size below nominal diameter, whether due to loss of core support, internal or external corrosion, or wear of outside wires (see Table 7-1).

   2. The number and distribution or concentration of broken outside wires.

   3. Worn outside wires.

   4. Sections of rope that are normally hidden during inspection or maintenance procedures, such as parts passing over sheaves (these are points most subject to deterioration).

   5. Corroded or broken wires at end connections

   6. Corroded, cracked, bent worn, or improperly applied end connections.

   7. Kinking, crushing, cutting, or unstranding.

b. All rope on cranes that have been idle for 1 month or more due to shutdown or storage shall be inspected before the crane is returned to service. A dated and signed report of the rope inspection, including results, shall be filed.

c. No precise rules can be given for determining the exact time to replace rope because many variables are involved. Safety in this respect depends largely on the use of good judgment by an appointed

person in evaluating remaining strength in a used rope, after allowance for deterioration disclosed by inspection. Safety of rope operation depends on this remaining strength.

Table 7-1. Maximum allowable rope reductions.

Rope diameter	Maximum allowable reduction from Nominal diameter
Up to 5/16 in. (8 mm)	1/64 in. (0.4 mm)
Over 5/16 in. to ½ in. (13 mm)	1/32 in. (0.8 mm)
Over ½ in to ¾ in. (19 mm)	3/64 in. (1.2 mm)
Over ¾ in. to 1 1/8 in. (29 mm)	1/16 in. (1.6 mm)
Over 1 1/8 in. to 1 ½ in. (38 mm)	3/32 in. (2.4 mm)

Reprinted from ASME B30.2-2005 by permission of The American Society of Mechanical Engineers. All rights reserved.

d. Removal criteria for rope replacement shall be as follows:

1. In running ropes, 12 randomly distributed broken wires in one rope lay, or 4 broken wires in one strand in one rope lay.

2. Wear of one-third of the original diameter of outside individual wires.

3. Kinking, crushing, birdcaging, or any other damage resulting in distortion of the rope structure.

4. Evidence of heat damage from any cause.

5. Reductions from nominal diameter greater than those listed in Table 7-1.

e. Replacement rope and connections shall have strength at least as great as the original rope and connections furnished by the crane manufacturer. Any deviation from the original size, grade, or construction shall be specified by a rope manufacturer, the crane manufacturer, or a qualified person.

f. Never use discarded rope for slings.

7.2.7.3 Chain (Welded Link)

a. Operate the crane under load in raising and lowering directions, and observe the operation of the chain and sprockets. The chain should feed smoothly into and away from the sprockets.

b. If the chain binds, jumps, or is noisy, first see that it is clean and properly lubricated. If the trouble persists, inspect the chain and mating parts for wear, distortion, or other damage.

c. The chain should be cleaned before inspection. Examine visually for gouges, nicks, weld spatter, corrosion, and distorted links. Slacken the chain and move adjacent links to one sire to inspect for wear at the contact points. If wear is observed or stretching is suspected, the chain should be measured according to the hoist manufacturer's instructions. If instructions are not available, proceed as follows:

1. Select an unworn, unstretched length of the chain (e.g., at the slack end).

2. Suspend the chain vertically under tension and, using a caliper-type gauge, measure the outside length of any convenient number of links approximately 12 in. (305 mm) to 14 in. (356 mm) overall.

3. Measure the same number of links in the used sections and calculate the percentage of increase in length.

d. Conditions such as the following shall be sufficient reason for questioning safety and for considering replacement:

1. If the used chain exceeds a crane manufacturer's recommended length or, in the absence of such a recommendation, the used chain is 1.5 percent longer than the unused chain for powered hoists or is 2.5 percent longer

than the unused chain for hand-operated chain, replace the chain.

2. The existence of gouges, nicks, corrosion, weld spatter, or distorted links.

e. Repairing the load chain by welding or any other means shall not be attempted by anyone other than the chain manufacturer.

f. Replacement chain shall be the same size, grade, and construction as the original chain furnished by the crane manufacturer unless otherwise recommended by the manufacturer due to working conditions.

g. Load-chain links that pass over the load sprocket on edge (alternate to those that lie flat in the pockets) should be installed with the welds away from the center of the sprocket. This precaution is not required on idler sprockets, which change the direction but not the tension in the chain.

h. The chain shall be installed without any twist between the hoist and an anchored end on either the loaded side or the slack side.

i. When a chain is replaced, disassemble and inspect the mating parts (sprockets, guides, stripper) for wear, and replace if necessary.

j. Discarded load chain shall not be used for slings.

7.2.7.4 Chain (Roller)

a. Test the crane under load in raising and lowering directions, observing the operation of the chain and sprockets. If the chain binds, jumps, or is noisy, clean and properly lubricate it. If the trouble persists, inspect the chain and mating parts for wear distortion, or damage.

b. If wear is observed or stretching is suspected, the chain shall be measured according to the crane manufacturer's instructions. If instructions are not available, proceed as follows:

1. Suspend the hoist in normal position and apply a light load of approximately 50 lb (23 kg).

2. Select a 12 in. (305 mm) section of chain that normally travels over the load sprocket.

3. Determine elongation by measuring with a caliper from the edge of one chain pin to the corresponding edge of another pin. If elongation exceeds ¼ in. (6.3 mm) in 12 in. (305 mm) compared to new or unstretched chain values, the chain shall be replaced.

4. Inspect for twist. Replace if the twist in any 5-ft (1.52 m) section exceeds 15 degrees.

5. Check for straightness in a plane perpendicular to the plane of the rollers. Replace if the chain has a bow exceeding ¼ in. (6.3 mm) in any 5-ft (1.52 M) section.

6. Additional inspection shall be made by removing the chain from the crane and cleaning it thoroughly. Deficiencies such as those listed below shall be carefully examined and a determination shall be made as to whether they constitute a safety hazard:

   i. Pins turned from original position.

   ii. Rollers that do not run freely with light finger pressure.

   iii. Joints that cannot be flexed by easy hand pressure.

   iv. Side plates that are spread open.

   v. Corrosion, pitting, or discoloration.

   vi. Gouges, nicks, or weld spatter.

c. Roller chain shall be replaced if any of the conditions exist as stated in paragraphs 7.2.7.4.b, 1 through 5 above.

d. Deficiencies as stated in paragraph 7.2.7.4.b.6 above are reason for questioning chain safety and considering its replacement.

e. Repairing of roller chain by welding or heating shall not be attempted.

f. Replacement chain shall be the same size, grade, and construction as the original chain furnished by the crane manufacturer unless otherwise recommended by the manufacturer due to working conditions.

g. Roller chain, discarded or new, shall not be used for slings.

7.2.8 CRANES NOT IN REGULAR SERVICE

a. Cranes that have been idle for 1 month or more but less than 1 year, shall be inspected before being placed in the service according to the requirements listed above in Section 7.2.6, "Frequent Inspection."

b. Cranes that have been idle for 6 months or longer shall be inspected before being placed in service according to the requirements listed above in Section 7.2.7, "Periodic Inspection."

c. The determination supporting these alternate inspection frequencies and procedures shall be made by a qualified person for each affected crane. Documentation supporting this determination shall be kept readily available.

7.3 TESTING

7.3.1 OPERATIONAL TESTS

a. Prior to initial use, all new, reinstalled, repaired, or modified cranes shall be tested by a designated person to ensure compliance with this chapter, including the following functions:

   1. Lifting and lowering.

   2. Trolley travel.

   3. Bridge travel.

   4. Locking, limiting, and indicating devices, if provided.

   5. Limit switches/devices.

b. The trip setting of hoist-limit devices shall be determined by tests with an empty hook traveling at increasing speeds up to the maximum speed. The actuating mechanism of the upper-limit device shall be located so that it will trip the device under all conditions and in sufficient time to prevent contact of the hook or load block with any part of the trolley or crane.

7.3.2 RATED LOAD TEST

a. Prior to initial use, all new or reinstalled cranes and cranes in which the load sustaining parts have been altered, modified, repaired, or replaced, or whose rated capacities have been affected shall be tested by or under the direction of a qualified inspector.

b. A written report confirming the rated load testing of the crane shall be furnished by the inspector.

c. Test loads shall not be less than 100 percent or more than 125 percent of the rated capacity, unless otherwise recommended by the manufacturer or a qualified person.

d. Testing shall consist of the following operations as minimum requirements:

   1. Hoist the test load a sufficient distance to ensure that the load is supported by the crane and held by the hoist brakes. Personnel shall be kept clear of the test load while it is suspended.

   2. Transport the test load by means of the trolley for the full length of the bridge.

   3. Transport the test load by means of the bridge for the full length of the runway, in one direction with the trolley as close to the extreme right-hand end of the crane as practical, and in the other direction with the trolley as close to the extreme left-hand end of the crane as practical.

   4. Lower the test load, stopping by the brakes.

e. The replacement of load chain and rope is specifically excluded from this requirement; however, an operational test of the crane shall be made in accordance with paragraph 7.3.1.a.1 prior to putting the crane back in service.

f. If wire rope clips or wedge socket end connection are installed during wire rope installation:

   1. The crane should be cycled several times with a load equal to or greater than the maximum operational load, normally 100 percent of the rated capacity.

   2. If wire rope clips are used, then check and retighten nuts to the wire rope clip or wire rope manufacturer's recommended torque value.

   3. If a wedge socket is used, then verify that the rope is properly seated.

g. Operational testing of altered, repaired, or modified cranes whose load sustaining parts or rated capacities have not been affected may be limited to the functions affected by the alteration, repair or modification as determined by a qualified person.

h. The transporting of test loads as required by paragraph 7.3.2.a above, shall be done

insofar as interfering equipment/structures permit and in accordance with recommendations from the manufacturer or a responsible engineering organization.

However, test loads should not be carried over critical systems or components.

i. Test loads shall be accurate to within –5 percent, +0 percent of stipulated values.

7.4 MAINTENANCE

7.4.1 OPERATING EQUIPMENT

a. A preventive maintenance program shall be established and based on the recommendation of the crane manufacturer. If equipment maintenance procedures deviate from published manufacturer's recommendations, the alternate procedures shall be approved in advance by the manufacturer or another qualified person and be kept readily available. Dated maintenance records should be kept where readily available to appointed personnel.

b. Replacement parts shall be at least equal to the original manufacturer's specifications.

c. All moving parts of the crane for which lubrication is specified shall be regularly lubricated. Check lubricating systems for delivery of lubricant. Follow manufacturer's recommendations as to points and frequency of lubrication, maintenance of lubricant levels, and types of lubricant to be used.

d. Maintenance personnel shall take the following precautions before performing maintenance on a crane:

    1. Move the crane to a location where it will cause the least interference with other cranes and operations.

    2. Place any attached loads on the ground or floor.

    3. Place all controllers in the OFF position.

    4. Perform a lockout/tagout procedure.

    5. Use warning signs and barriers on the floor beneath the crane where overhead maintenance work creates a hazard.

    6. If the runway remains energized, place stops or signalers full-time at a visual vantage point to observe the approach of active cranes and prohibit contact by the active cranes with the idle crane, with persons performing maintenance, or with the maintenance equipment.

    7. Install a guard or barrier between adjacent runways for the length of the established work area to prevent contact between persons performing maintenance and any crane on the adjacent runway.

7.4.2 WIRE-ROPE MAINTENANCE

Personnel using wire rope shall ensure proper care by doing the following:

a. Store rope to prevent damage or deterioration.

b. Unreel or uncoil rope as recommended by the rope manufacturer and with care to avoid kinking or inducing a twist.

c. Before cutting rope, use some method to prevent unlaying the strands. Heat affected zones of flame cut wire rope shall not be allowed to bear load.

d. During installation, avoid dragging the rope in dirt or around objects that will scrape, nick, crush, or induce sharp bends in it.

e. Maintain rope in a well-lubricated condition to reduce internal friction and prevent corrosion. Ensure that lubricant applied as part of a maintenance program is compatible with the original lubricant and is also a type that does not hinder visual inspection. Those sections of rope located over sheaves or otherwise hidden during inspection and maintenance procedures require special attention when the rope is being lubricated.

7.5 OPERATION

a. The following shall apply to all personnel involved in overhead and gantry crane operation.

b. At the initial stage of the planning process, an appointed person shall classify each lift into one of the DOE-specified lift categories (ordinary, critical, or preengineered production).

7.5.1 CONDUCT OF OPERATOR

a. Do not engage in any practice that will divert your attention while operating the crane.

b. Do not operate cranes without complying with the requirements of Chapter 6. Your immediate supervisor shall participate in this determination.

c. Operators shall be held directly responsible for the safe operation of their equipment. Whenever there is any question as to the safety of the activity, an operator has the authority to stop and refuse to handle loads until the matter has been resolved by supervisory personnel.

d. Sound a warning signal (if furnished) during travel, particularly when approaching personnel.

e. If you find the crane's main or emergency switch open when starting on duty, do not close it until it has been determined that no one is on or close to the crane. If there is a warning sign on the switch, do not remove it unless you placed it there. Do not close the switch until the warning sign has been removed by the person who placed it there.

f. Before closing the main switch, ensure that all controllers are in the OFF position.

g. If a power failure occurs during operation, immediately switch all controllers to the OFF position.

h. Become familiar with your equipment and its proper care. If adjustments or repairs are necessary, or any defects are known, report them promptly to the responsible supervisor. Also, notify the next operator of the defects at shift change.

i. Contacts with runway stops or other cranes shall be made with extreme caution. If you are ordered to engage with or push other cranes, do this with particular care for the safety of persons on or below the cranes, and only after making certain that any persons on the other cranes are aware of what action is to be taken.

j. Secure outdoor cranes before leaving them.

k. When the wind-indicating alarm is given, anchor the bridge on outside cranes.

l. Lock and tag the main positive electrical control switch in the OPEN position before any crane maintenance is performed.

m. Operate all controls before beginning a new shift. If any controls do not operate properly, adjust or repair them before operations begin.

n. Do not hoist two or more separately rigged loads in one lift, even though the combined load is within the crane's rated capacity.

o. Ensure that a 10BC or larger fire extinguisher is installed in the cab of cab-operated cranes. The extinguisher shall be maintained in a serviceable condition.

p. Do not lift, lower, or travel the crane while anyone is on the load or hook.

7.5.2 HOIST-LIMIT SWITCH/DEVICE

a. At the beginning of each work shift, or the first time the crane is used during a shift, test the upper-limit switch/device of each hoist under no load. Exercise extreme care to avoid two-blocking; "inch" the block into the limit switch or run it in at slow speed. If the switch/device does not operate properly, immediately notify the supervisor.

b. If a lift is in progress during a shift change, this testing requirement is considered to have been satisfied for the completion of

that lift. However, test the limit switch again before the next lift.

c. Do not use the final hoist-limit switch/device that controls the upper limit of travel of the load block as an operating control.

7.5.3 STANDARD HAND SIGNALS

The standard hand signals for DOE use shall be as specified in the latest edition of the ASME B30 standards for the particular type of crane or hoist being used (see Figure 7-5).

7.5.4 IDENTIFICATION OF SIGNALERS

a. All personnel acting as signalers during the crane operations shall be clearly identified to the crane operator. Options for improving signaler visibility include using an orange hardhat, orange gloves, or orange vest.

b. In those cases where the crane operator cannot see the signaler, a second person (relay signaler) shall be stationed where he or she can see both the signaler and the crane operator and signals can be relayed to the operator. The relay signaler shall also be clearly identified to the crane operator.

c. Where voice (direct or two-way radio) communication is used, the signaler shall communicate directly with the operator, not through a third person.

d. The operator shall obey signals only from the designated signaler. *Obey a STOP signal no matter who gives it.*

7.5.5 SIZE OF LOAD

a. The weight of the load shall be determined prior to making the lift.

b. The crane and rigging equipment shall not be loaded beyond its rated capacity, except for authorized testing described in Section 7.3.

7.5.6 ATTACHING THE LOAD

a. Ensure that the hoist rope is free from kinks or twists. Do not wrap the hoist rope around the load.

b. Ensure the load is attached to the load-block hook by means of slings or other approved devices.

c. Take care to make certain that the sling clears all obstacles.

7.5.7 MOVING THE LOAD

a. The person appointed to direct the lift shall see that the load is well secured and properly balanced in the sling or lifting device before it is lifted more than a few inches.

b. Before starting to hoist, note the following conditions:

   1. Hoist rope shall not be kinked.

   2. Multiple-part lines shall not be twisted around each other.

   3. The hook shall be positioned above the center of gravity of the load in such a manner as to minimize swinging when the load is lifted.

   4. If there is a slack-rope condition, it should be determined that the rope is properly seated on the drum and in the sheaves.

   5. All personnel including the qualified rigger shall be clear of the load.

c. During hoisting, take care to ensure that:

   1. The load is lifted slowly until it clears the ground or other support to minimize swinging.

   2. There is no sudden acceleration or deceleration of the moving load.

   3. The load does not contact any obstructions. A “dry run” shall be conducted in areas where clearance is limited.

HOIST With forearm vertical, forefinger pointing up, move hand in small horizontal circles.	**LOWER** Extend arm downward, forefinger pointing down, and move hand in small horizontal circles.	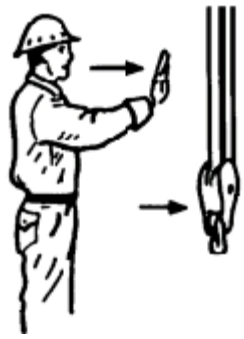 **BRIDGE** Arm extended forward, hand open and slightly raised, make pushing motion in direction of travel.
TROLLEY TRAVEL Palm up, finger closed, thumb pointing in direction of motion, jerk hand horizontally.	**STOP** Extend arm, palm down, hold position rigidly.	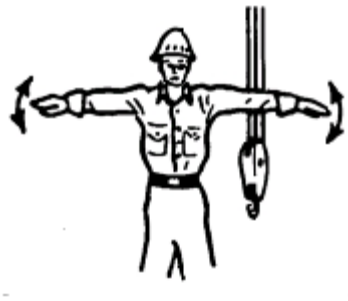 **EMERGENCY STOP** Extend arm, palm down, moving hand rapidly right and left.
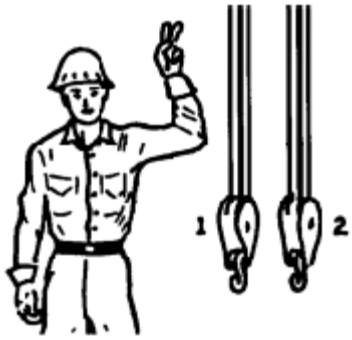 **MULTIPLE TROLLEYS** Hold up one finger for block marked “1” and two fingers for block marked “2.” Regular signals follow.	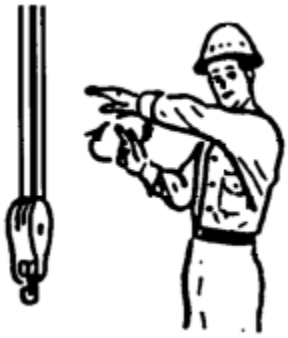 **MOVE SLOWLY** Use one hand to give any motion signal and place other hand motionless above hand giving the motion signal. (Hoist slowly shown as example.)	**MAGNET IS DISCONNECTED** Crane operator spreads both hands apart, palms up.

Reprinted from ASME B30.2-2005 by permission of The American Society of Mechanical Engineers. All rights reserved.

Figure 7-5. Standard hand signals for controlling overhead crane operation

d. Cranes shall not be used for side pulls except when specifically authorized by an appointed person who has determined that the stability of the crane is not endangered and that load-bearing parts of the crane will not be overstressed.

e. Avoid carrying loads above people.

f. Each time a load approaching the rated capacity is handled, test the hoist brakes by raising the load a few inches and applying the brakes. Any slippage or downward motion is unacceptable.

g. Do not lower the hook below the point where less than two full wraps of rope remain on the hoisting drum.

h. When the load or hook approaches personnel, sound the warning signal.

i. Tag lines should be used as required to guide, snub, or otherwise control the load.

j. Do not leave a suspended load unattended unless specific precautions have been instituted and are in place.

k. Work on suspended loads is prohibited under normal conditions. If the responsible manager decides that it is necessary to work on a suspended load, guidelines for safe operation shall be established through consultation with the appropriate safety organization. Suspended loads that must be worked on shall be secured against unwanted movement.

7.5.8 ORDINARY LIFTS

a. The requirements of all preceding paragraphs in Section 7.5, "Operation," also shall apply to ordinary lifts.

b. An appointed person shall classify each lift into one of the DOE categories (ordinary, critical, or preengineered production) before the lift is planned.

c. Hoisting and rigging operations for ordinary lifts require a designated leader who shall be present at the lift site during the entire lifting operation. If the lift is being made by only one person, that person assumes all responsibilities of the designated leader.

d. Leadership designation may be by written instructions, specific verbal instructions for the particular job, or clearly defined responsibilities within the crew's organizational structure.

e. The designated leader's responsibility shall include the following:

   1. Ensure that personnel involved understand how the lift is to be made.

   2. Ensure that the weight of the load is determined, that proper equipment and accessories are selected, and that rated capacity is not exceeded.

   3. Survey the lift site for hazardous/unsafe conditions.

   4. Ensure that equipment is properly set up and positioned.

   5. Ensure that a signaler is assigned, if required, and is identified to the operator.

   6. Direct the lifting operation to ensure that the job is done safely and efficiently.

   7. Stop the job when any potentially unsafe condition is recognized.

   8. Direct operations if an accident or injury occurs.

f. The operator, or a designated person, shall ensure that the crane is still within the inspection interval.

g. The operator, or a designated person, shall visually examine the crane in accordance with Section 7.2.4.

7.5.9 PLANNED ENGINEERED LIFTS

Lifts in excess of the rated load may be required from time to time on a limited basis for specific purposes such as new construction or major repairs. Every planned engineered lift exceeding the rated load shall be treated as a special and separate event. Limitations and planned requirements shall be applicable, as follows:

a. Planned engineered lifts shall be limited to powered cranes having a load rating of 5 tons and above.

b. When planned engineered lifts are made, the load shall not exceed 125% of the crane load rating, except as provided in para. 7.5.9.d.

c. Planned engineered lifts shall be limited to two occurrences on any crane within any continuous 12 month period, except as provided in para. 7.5.9.d. If greater lift frequency is desired, consideration shall be given to rerating or replacing the crane.

d. The crane manufacturer shall be consulted if the planned engineered lift exceeds 125% of rated load or if the frequency of planned engineered lifts exceeds two during a continuous 12-month period.

e. Each planned engineered lift shall comply with the following requirements:

   1. A written review of the crane service history shall be prepared, including reference to previous planned engineered lifts, structural repairs, and modifications of original design

   2. The design of the structural, mechanical, electrical, pneumatic, and hydraulic components of the crane shall be reviewed, by means of applicable calculations for the load to be lifted, and approved by the crane manufacturer or a qualified person, in accordance with accepted crane design standards if the load to be lifted exceeds 125% of rated load, or if the frequency of planned engineered lifts exceeds two during a continuous 12-month period

   3. The design of the crane-supporting structure shall be reviewed and approved by a qualified person for conformance to applicable design criteria. The crane support shall be inspected and any deterioration or damage shall be taken into consideration in design calculations for the load to be lifted.

   4. The crane shall be inspected in accordance with para. Section 7.2.7 just prior to making the lift.

   5. The lift shall be made under controlled conditions under the direction of a designated person in accordance with a previously prepared lift plan. All persons in the area of the crane shall be alerted that the lift is being made.

   6. The operator shall test the crane at the planned engineered load by lifting the load a short distance and setting the brakes. The lift shall only be continued if the brakes stop and hold the load. Any failure to hold the load shall be corrected before proceeding with the lift.

   7. The crane shall be inspected in accordance with Section 7.2.7 after the lift is completed and prior to being used for the lifting of any other load.

   8. A record of the planned engineered lift, including calculations, inspections, and all distances moved, shall be placed on file for availability to appointed personnel.

f. The rated load test specified in Section 7.3.2 is not applicable to planned engineered lift provisions.

7.5.10 CRITICAL LIFTS

See Chapter 2, “Critical Lifts,” for critical-lift requirements.

Exhibit I is intended to be a sample form only.
The equipment manufacturer's inspection/testing
criteria supercede any other criteria.
In cases where the equipment manufacturer does not include
inspection/testing criteria, other forms developed to facilitate
required inspection/testing are acceptable.

INTENTIONALLY BLANK

EXHIBIT I
(SAMPLE FORM)

BRIDGE, WALL, GANTRY CRANE LOAD TEST FORM

EQUIPMENT NO. _____ MAKE _____ RATED CAPACITY _____ DATE _____

LOAD TEST INSPECTION REPORT

The following checklist identifies the items to be inspected prior to the load test. Any unusual conditions observed during the inspection should be noted in the Remarks section.

NOTES:
1. Craftsmen shall initial and date all tests, work, and inspections completed below.
2. Qualified inspector shall verify all steps prior to load test.

NO.	CRANE ITEM	DEFECT	OK	NA	NO.	CRANE ITEM	DEFECT	OK	NA
1	Load Hook & Blocks				18	Controllers			
2	Wire Rope and End Connections				19	Relays and Coils			
3	Handrails, Walkways, and Ladders				20	Conductors and Collectors			
4	Bridge and Trucks				21	Panel Wiring			
5	Bridge Wheels and Bearings				22	Resistors			
6	Trolley and Rails				23	Bypass Switches			
7	Trolley Wheels and Bearings				24	Limit Switches			
8	Crane Alignment				25	Contactor (Electrical)			
9	Runway Rail & Clamps				26	Motors			
10	Bumpers/Endstops				27	Gauges			
11	Brake System				28	Lighting System			
12	Drive Shafts, Gears, Couplings & Bearings				29	Heater and Switches			
13	Pawls, Ratchets, Spuds, & Windlocks				30	Operator's Cab			
14	Sheaves				31	Safety			
15	Warning Devices				32	Chain and Sprockets			
16	Capacity Signs				33	Structural			
17	Main Disconnect				34	Wire Rope Drum and Machinery Foundation			

REMARKS (unusual conditions – noises, structural cracks, misalignment, etc.)

EXHIBIT I (continued)

BRIDGE CRANE AND FOLLOW UP CHECKS

NOTES:

1. Craftsmen shall initial all steps completed below.
2. Qualified inspector shall verify all steps below.
3. Load test shall be performed on all new, repaired, or modified cranes prior to initial use.
4. Load test crane at 125% of rated capacity. In no case shall the load test exceed 125% of rated capacity. Test weights shall be accurate to –5%, +0% of stipulated values.

INITIAL

_____ 1. Set crane up for load test and qualified inspector verify inspection is complete prior to load test.

_____ 2. The trip setting of hoist-limit devices shall be determined by tests, with an empty hook traveling at increasing speeds up to the maximum speed. The actuating mechanism of the limit device shall be located so that it will trip the device under all conditions and in sufficient time to prevent contact of the hook or load block with any part of the trolley or crane.

_____ 3. Rig test weight to hoist hook using appropriate slings.

_____ 4. Hoist the test load a sufficient distance to ensure that the load is supported by the crane and held by the hoist brakes.

_____ 5. Transport the test load by means of the trolley for the full length of the bridge. Ensure during operation that the trolley runs true on the bridge. Check trolley motor, brake, and gear case for overheating.

_____ 6. Transport the test load by means of the bridge for the full length of the runway, first in one direction with the trolley as close to the extreme right-hand end of the crane as practical and next in the other direction with the trolley as close to the extreme left-hand end of the crane as practical. Ensure that the bridge runs true on the runway rails and that no undue girder deflection occurs. Check for bridge motor, brake, and gear-case overheating.

_____ 7. Move the test load back into the original position and lower the test load, stopping by the brakes. Hold the load for 10 minutes or the time required to check all primary load-bearing parts while under load for slippage, damage, or permanent deformation.

_____ 8. Slowly lower the test load to the floor.

_____ 9. At the completion of the load test, visually inspect the following load-bearing parts for signs of wear, deformation, and deterioration:

EXHIBIT I (continued)

DEFECTIVE/OK/NA

_____ a. Bridge track

_____ b. Bridge wheels

_____ c. Trolley track

_____ d. Trolley wheels

_____ e. Gears

_____ f. Magnetic brakes

_____ g. Blocks.

Visually inspect rope in accordance with Chapter 11, "Wire Rope and Slings."

_____ a. Rope diameter: (Previous) _____ (Present) _____

_____ b. Wear

_____ c. Kinks

_____ d. Broken wires

_____ e. Other signs of deterioration.

Visually inspect the rope drum for:

_____ a. Wear

_____ b. Deformation

_____ c. Deterioration.

Hook Inspection

A qualified inspector shall perform nondestructive tests on hook by visual examination, liquid penetrant examination, or magnetic-particle examination. Acceptance: No cracks, linear indications, laps, or seams.

Hooks with more than 5% normal (new hook) throat opening, not to exceed 1⁄4 in. (or as recommended by the manufacturer) shall be replaced. Hooks with any visibly apparent bend or twist from the plane of the unbent hook shall be replaced. Hooks having more than 10% wear in the throat section or 5% elongation of the shank shall be replaced. Lubricate hook bearing and latch pin as applicable.

Establish three marks, A, B, and C, with center punch. For ease in measuring, set distances on an even number of inches.

BEFORE LOAD TEST

Length AB _____ in.

Length BC _____in.

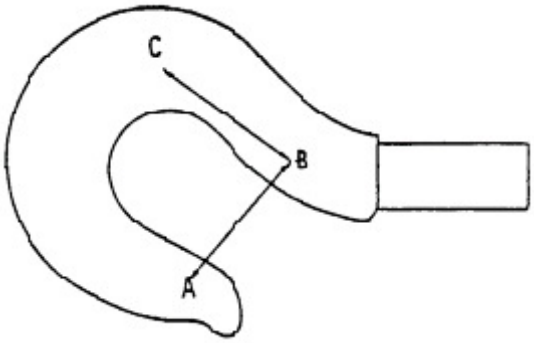

AFTER LOAD TEST

Length AB _____ in.

Length BC _____in.

Check for:

1. Wear and deformation
2. Cracks and twisting
3. Signs of opening between Point A and Point B

Load Test Inspection Date _____

Qualified Inspector _____

Operated By _____

Actual Load Test _____lb

EXHIBIT II
(SAMPLE FORM)

OVERHEAD CRANE PRE-OPERATIONAL CHECKLIST
(Records Are Not Required)

CRANE NO.	CAPACITY	TYPE	LOCATION	SHIFT 1 2 3
OPERATORS NAME:		**INSTRUCTIONS: Check all items. Inspect and indicate as: Satisfactory – S, Unsatisfactory – U, or Not Applicable – NA**		

	1. WALK AROUND INSPECTION	**S/U/ NA**		**2. MACHINERY INSPECTION**	**S/U/ NA**
a	Foundations		a	Holding Brake *	
b	Access		b	Load Control Brake	
c	Secured Items		c	Covers Secured	
d	Walkways/Handrails		d	Upper Sheaves *	
e	Bridge, Drive Motor		e	Wire Rope *	
f	Bridge Brake *		f	Hooks: Cracks, Wear, Deformation Throat Opening, Latch Operation *	
g	Hydraulics		g	Fluid Leaks	
h	Couplers/Connection Rods		h	Batteries	
i	End Trucks *		i	Electric Motors	
j	Rail Sweeps		j	Electric Panels	
k	Windlocks/Chock/Stops		k	Runway/Bridge Conductors	
l	Housekeeping		l	Runway/Bridge Collectors	
			m	Electrical Guards	
			n	Festoon System	
			o	Warning Tags/Signs	
			p	Exposed Electrical Hazards	
			q	Trolley Stops *	

EXHIBIT II (continued)

OVERHEAD CRANE PRE-OPERATIONAL CHECKLIST
(Records Are Not Required)

3. OPERATOR CAB INSPECTION		S/U/ NA	4. OPERATION INSPECTION		S/U/ NA
a	Housekeeping		a	Power Supply Relay *	
b	Warning Tags *		b	Manual Reset	
c	Cab Door(s)		c	Stop Button/Control *	
d	Fire Extinguisher		d	Pendant Buttons *	
e	Controls Identification		e	Upper Limit/Main *	
f	Electrical Enclosures		f	Upper Limit/Auxiliary *	
g	Pendant Strain Relief		g	Lower Limit/Main	
h	Visibility/Windows		h	Lower Limit/Auxiliary	
i	Safety Devices		i	Bridge Controls *	
j	Warning/Indicator Light		j	Bridge Brake *	
k	Alarms		k	Trolley Control *	
			l	Main Hook *	
			m	Auxiliary Hook *	
			n	Work Area	
			o	Runway Stops *	
			p	Travel Limit Relays *	

INSTRUCTIONS: Inspect all applicable items each shift of operation. Suspend all operations immediately when observing an unsatisfactory condition for asterisked (*) items. In addition, suspend operation when any unsafe condition is observed and immediately notify supervisor. Other conditions not affecting safety shall be noted under “Remarks” and reported to supervisor.

REMARKS:

EXHIBIT III
(SAMPLE FORM)

PERIODIC CRANE INSPECTION REPORT

MECHANICAL ITEMS						
MAKE:		**CAPACITY:**		**LOCATION:**		
STATUS CODE:	**SR** – Should be Replaced **NR** – Needs Repair **R** – Repaired **SN** – See Notes **N/A** – Not Applicable					
ITEM	**OK**	**CODE**		**ITEM**	**OK**	**CODE**
Bridge				- Cam Followers/Guide*		
- Alignment				- Runway End-Stops		
- Girders (camber)				- Railway Sweeps/Safety Lugs		
- Rails				- Energy Absorbing Bumpers		
- Walks, Ladders, Railings				**Mono Rail**		
- Trucks to Girder Connection				- Girders		
- Trucks				- Girder Supports		
- Wheels, Driver*				- Sway Braces		
- Wheels, Idler*				**Misc.**		
- Wheels, Bearings*				- Clearances Overhead (3”)		
- Axles & Coupling*				- Clearances Lateral (2”)		
- Squaring Shaft				Rated Load Markings:		
- Squaring Shaft Bearings				- Each Side of Crane Bridge		
- Squaring Shaft Couplings				- Each Hoist/Load Block		
- Motor Coupling				**Trolley Drive**		
- Gear Reducer				- Wheels, Driver*		
- Gear Reducer Oil Seals				- Wheels, Idler*		
- Axle Pinion				- Wheels, Bearings*		
- Axle Gear				- Axles & Couplings		
- Runway Alignment				- Motor Couplings*		

EXHIBIT III (continued)
(SAMPLE FORM)

ITEM	OK	CODE		ITEM	OK	CODE
- Gear Reducer				- Drum Grooving		
- Gear Reducer Oil Seals				- Drum Shafts		
- Axle Pinion				- Motor Pinion		
- Axle Gear				- Motor Gear		
- Cam Followers/Guides*				- Intermediate Pinion		
- Energy Absorbing Bumpers				- Intermediate Gear		
- End Stops				- Drum Pinion		
Hoist (M – Main) **(A – Auxiliary)**				- Drum Gear		
- Hook				- Hoist Case Bearing		
- Hook Bearing				- Mechanical Load Brake*		
- Sheaves*				- Friction Disc*		
- Sheave Bearings*				- Pawl*		
- Equalizer Sheave*				- Pawl Shifter		
- Rope/Chain				- Ratchet or Band		
- Rope Anchors				- Motor Coupling*		
				- Hoist Case Coupling*		

Needs Immediate Action:

Notes:

Circle One: **PASS** **FAIL**

INSPECTOR: (print) _____ SIGNATURE: _____ DATE: _____

Items with * to be inspected prior to use as part of the Pre-Operational check and lubricated as needed. All other items to be inspected and lubricated annually.

EXHIBIT IV
(SAMPLE FORM)

OVERHEAD CRANE PERIODIC INSPECTION REPORT

ELECTRICAL ITEMS						
MAKE:		**CAPACITY:**		**LOCATION:**		
STATUS CODE:	**SR** – Should be Replaced **NR** – Needs Repair **R** – Repaired **SN** – See Notes **N/A** – Not Applicable					
ITEM	**OK**	**CODE**		**ITEM**	**OK**	**CODE**
Brakes				- Trolley Motor Rings		
- M.H. Brake Shoes & Disc				- M.H. Motor Bearings		
- M.H. Brake Linings*				- M.H. Motor Brushes*		
- M.H. Brake Linkage				- M.H. Motor Rings		
- M.H. Brake Coil				**Misc.**		
- A.H. Brake Shoes & Discs						
- A.H. Brake Lining*						
- A.H. Brake Linkage						
- A.H. Brake Coil						
- Trolley Brake Shoes & Disc						
- Trolley Brake Lining*				**Controls**		
- Trolley Brake Linkage				*- For Magnetic Control*		
- Trolley Brake Coils				- Master Switches		
- Hydraulic Brake Bleeder*				- Push-button Station		
Motors				- M.H. Contactors		
- Bridge Motor Bearings				- A.H. Contactors		
- Bridge Motor Brushes*				- Trolley Contactors		
- Bridge Motor Rings				- Bridge Contactors		
- Trolley Motor Bearings				- M.H. Overhead Relays		
- Trolley Motor Brushes*				- A.H. Overhead Relays		

EXHIBIT IV (continued)
(SAMPLE FORM)

ITEM	OK	CODE		ITEM	OK	CODE
Controls (continued)				**Resistors**		
- Trolley Overhead Relays				- M.H. Resistors		
- Bridge Overhead Relays				- A.H. Resistors		
- M.H. Limit Switch Contacts				- Trolley Resistors		
- A.H. Limit Switch Contacts				- Bridge Resistors		
For Manual Drum Control				**Mainline**		
- M.H. Finger Tips*				- Mainline Switch		
- M.H. Segments*				- Fuses (Sizes……..)		
- A.H. Finger Tips*				- Power Wiring		
- A.H. Segments*				- Control Wiring		
- Trolley Finger Tips*				- Trolley Collectors*		
- Trolley Segments*				- Runway Collectors*		
- Bridge Finger Tips*				- Bridge Conductors		
- Bridge Segments*				- Runway Conductors		

Needs Immediate Action:

Notes:

Circle One: **PASS** **FAIL**

INSPECTOR: (print) _____ SIGNATURE: _____ DATE: _____

Items with * to be inspected prior to use as part of the Pre-Operational check and lubricated as needed. All other items to be inspected and lubricated annually.

CHAPTER 8
HOISTS

This chapter provides safety standards for inspecting, testing, and operating hoists not permanently mounted on overhead cranes and implements the requirements of ASME B30.11 ("Monorail Systems and Underhung Cranes"), B30.16["Overhead Hoists (Underhung)"], and B30.21 ("Manually Lever Operated Hoists") (for latest ASME standards, see http://catalog.asme.org/home.cfm?Category=CS).

8.1 GENERAL 8-1
- 8.1.1 Operator Training/Qualification 8-4
- 8.1.2 Marking 8-4
- 8.1.3 Warning Labels 8-4
  - 8.1.3.1 Electric- or Air-Powered Hoists 8-4
  - 8.1.3.2 Hand-Chain-Operated or Manual-Lever-Operated Hoists 8-4
- 8.1.4 Design Standards 8-5
- 8.1.5 Design Factors 8-5
- 8.1.6 Load-Braking/Load-Controlling Mechanisms 8-5
  - 8.1.6.1 Electric-Powered Hoists 8-5
  - 8.1.6.2 Air-Powered Hoists 8-5
  - 8.1.6.3 Hand-Chain-Operated Hoists 8-6
  - 8.1.6.4 Manual-Lever-Operated Hoists 8-6
- 8.1.7 Wire Rope 8-6
- 8.1.8 Load Chain 8-6
  - 8.1.8.1 Electric-Powered, Air-Powered, and Manual-Lever-Operated Hoists 8-6
  - 8.1.8.2 Hand-Chain-Operated Hoists 8-6
- 8.1.9 Web Strap 8-7
- 8.1.10 Overtravel Protection 8-7
  - 8.1.10.1 Upper-Limit Switches/Devices 8-7
  - 8.1.10.2 Lower-Limit Switches/Devices 8-7
- 8.1.11 Support 8-7
- 8.1.12 Location 8-7
- 8.1.13 Load Rating 8-7

8.2 INSPECTIONS 8-8
- 8.2.1 Hoist Service 8-8
- 8.2.2 Initial Inspection 8-8
- 8.2.3 Daily Inspection 8-8
- 8.2.4 Frequent Inspection 8-8
- 8.2.5 Periodic Inspection 8-9
  - 8.2.5.1 Hoists 8-9
  - 8.2.5.2 Wire Rope 8-9
  - 8.2.5.3 Welded-Link Chain 8-10
  - 8.2.5.4 Roller Chain 8-11
  - 8.2.5.5 Synthetic-Web Strap 8-12
- 8.2.6 Hoists Not in Regular Service 8-13

8.3 TESTING 8-14
8.3.1 Operational Tests 8-14
8.3.1.1 Electric- or Air-Powered Hoists 8-14
8.3.1.2 Hand-Chain-Operated Hoists 8-14
8.3.1.3 Manual-Lever-Operated Hoists 8-14
8.3.2 Proof-Load Test 8-14
8.3.2.1 Electric- or Air-Powered Hoists 8-14
8.3.2.2 Hand-Chain-Operated or Manual-Lever-Operated Hoists 8-14

8.4 MAINTENANCE 8-16

8.5 OPERATION 8-17
8.5.1 Conduct of Operator 8-17
8.5.2 Size of Load 8-17
8.5.3 Attaching the Load 8-17
8.5.4 Moving the Load 8-17
8.5.5 Hoist-Limit Switch 8-18
8.5.6 Ordinary Lifts 8-18
8.5.7 Planned Engineered Lifts 8-19
8.5.8 Critical Lifts 8-20

EXHIBIT I Hoist Load Test 8-24
EXHIBIT II Underhung Hoist Periodic Inspection Report 8-26

8.1 GENERAL

a. Hoists described in this chapter include hand-powered, air-powered, and electric-powered hoists that are not permanently mounted on overhead cranes.

b. This chapter applies to the following types of equipment (see Figures 8-1 through 8-6):

   1. Overhead hoists (underhung).

   2. Jib cranes/hoists (floor and wall mounted).

   3. Monorail systems.

   4. Manual-lever-operated hoists (wire rope, chain, and web-strap types).

c. Wire-rope ratchet and pawl lever-operated hoists should not be used for lifting service (see Figure 8-8).

d. Systems used for transporting personnel and specially insulated hoists used for handling electrically energized power lines require special considerations and are not included in this chapter.

Figure 8-1. Hand-chain-operated hoists.

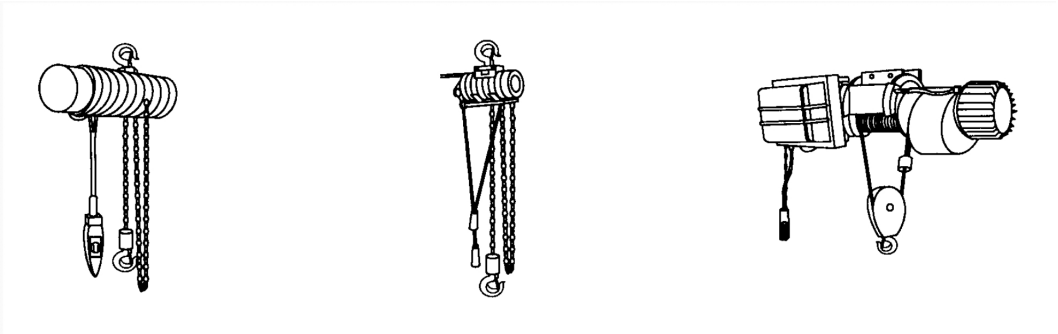

Figure 8-2. Electric/air-powered chain and wire-rope hoists.

Reprinted from ASME B30.16-2007 by permission of The American Society of Mechanical Engineers. All rights reserved.

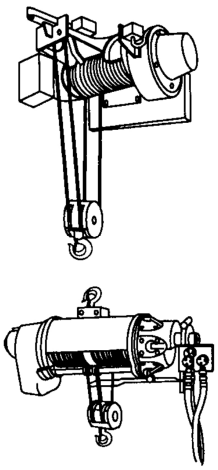

Figure 8-3. Electric/air-powered wire-rope hoists.

Reprinted from ASME B30.16-2007 by permission of The American Society of Mechanical Engineers. All rights reserved.

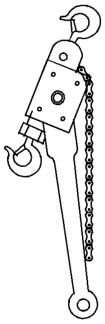

Figure 8-4. Manual-lever-operated hoist – chain type.

Figure 8-5. Manual-lever-operated hoist – wire-rope type.

Reprinted from ASME B30.21-2005 by permission of The American Society of Mechanical Engineers. All rights reserved.

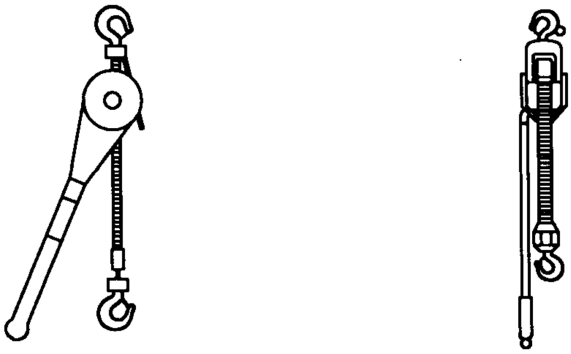

Figure 8-6. Manual-lever-operated hoist – web-strap type.

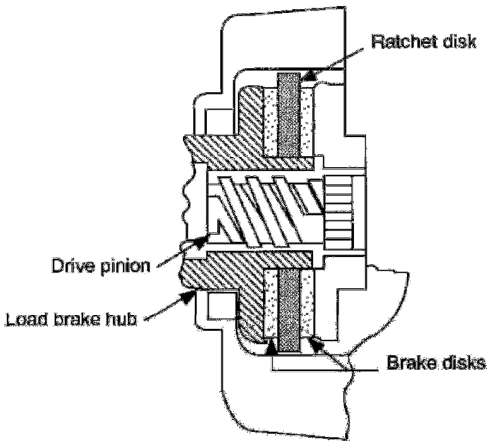

Figure 8-7. Recommended – hoists with friction brake type load-controlling mechanisms.

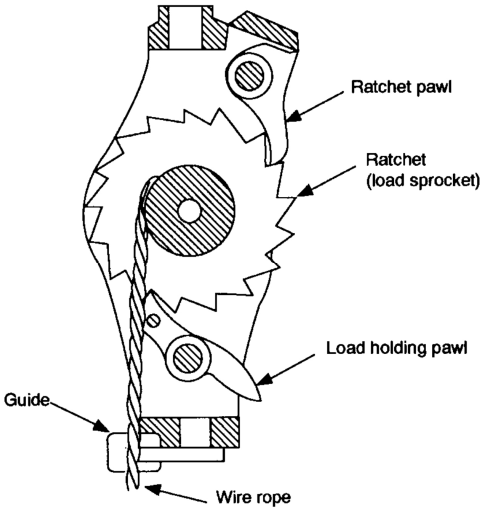

Figure 8-8. Not recommended – hoists with ratchet and pawl load-controlling mechanisms.

Reprinted from ASME B30.21-2005 by permission of The American Society of Mechanical Engineers. All rights reserved.

8.1.1 OPERATOR TRAINING/QUALIFICATION

Hoist operators shall be trained and qualified according to requirements found in Chapter 6, "Personnel Qualification and Training."

8.1.2 MARKING

a. The rated capacity shall be permanently marked on the hoist or load block.

b. Electric-powered hoists shall be marked with:

   1. Name of manufacturer.

   2. Manufacturer's model or serial number.

   3. Voltage of AC or DC power supply and phase/frequency of AC power supply.

   4. Circuit ampacity.

c. Air-powered hoists shall be marked with:

   1. Name of manufacturer.

   2. Manufacturer's model or serial number.

   3. Rated air pressure.

d. Hand-chain-operated hoists shall be marked with:

   1. Name of manufacturer.

   2. Manufacturer's model or serial number.

e. Manual-lever-operated hoists shall be marked with:

   1. Name of manufacturer.

   2. Manufacturer's model or serial number.

8.1.3 WARNING LABELS

Documented evidence of equivalent training of the user of the hoist demonstrating that the information on the warning labels has been conveyed and understood by the user will waive the requirement to maintain warning labels.

8.1.3.1 Electric- or Air-Powered Hoists

a. Labels shall be affixed to the hoist, load block, or controls that display the word WARNING or other legend designed to bring the label to the attention of an operator.

b. The label shall contain cautionary language against any of the following:

   1. Lifting more than the rated load.

   2. Operating a hoist when the load is not centered under the hoist.

   3. Operating a hoist with twisted, kinked, or damaged chain or wire rope.

   4. Operating a damaged or malfunctioning hoist.

   5. Lifting personnel or lifting loads above personnel.

   6. Operating a wire-rope hoist with a wire rope that is not properly seated in its grooves.

   7. Removing or obscuring warning labels.

c. A label shall be affixed on all electrical control enclosures. The label shall be in compliance with ASNI Z535.4, and shall include, but not be limited to, information such as:

   1. "Disconnect power and lockout/tagout disconnecting means before removing cover or servicing this equipment."

   2. "Do not operate without cover in place."

8.1.3.2 Hand-Chain-Operated or Manual Lever-Operated Hoists

a. Labels shall be affixed to the hoist or load block and shall display the word WARNING or other legend designed to bring the label to the attention of an operator.

b. The label shall contain cautionary language against any of the following:

1. Lifting more than the rated load.

2. Operating a hoist when it is restricted from forming a straight line with the direction of loading.

3. Operating the hoist with twisted, kinked, or damaged wire rope, chain, or webbing strap.

4. Operating damaged or malfunctioning hoists.

5. Lifting personnel or lifting loads above personnel.

6. Operating a hoist with lever extensions (for lever-operated hoists).

7. Operating hoists with other than manual power (for hand-chain-operated hoists).

8. Removing or obscuring warning labels.

8.1.4 DESIGN STANDARDS

a. At a minimum, safety features and operation shall meet the provisions of ASME B30.16 and B30.21.

b. Mechanical, electrical, and structural components of hoist design shall meet accepted hoist design standards contained in ASME HST-1M, -2M, -3M, -4M, -5M, and –6M ("Performance Standard for Electric Chain Hoists"; "Performance Standard for Hand Chain Manually Operated Chain Hoists"; "Performance Standard for Manually Lever Operated Chain Hoists"; "Performance Standard for Electric Wire Rope Hoists"; "Performance Standard for Air Chain Hoists"; and "Performance Standard for Air Wire Rope Hoists," respectively).

8.1.5 DESIGN FACTORS

a. For electric- or air-powered hoists, load-suspending parts of powered hoists shall be designed so that the static stress calculated for the rated load will not exceed 20 percent of the average ultimate material strength. This requirement is commonly reflected by quoting a minimum design factor of 5:1.

b. For hand-chain-operated and manual-lever-operated hoists, load-suspending parts shall be designed so that the static stress calculated for the rated load will not exceed 25 percent of the average ultimate strength. This requirement is commonly reflected by quoting a minimum design factor of 4:1.

8.1.6 LOAD-BRAKING/LOAD-CONTROLLING MECHANISMS

8.1.6.1 Electric-Powered Hoists

a. Under normal operating conditions with rated load and under test conditions with test loads up to 125 percent of rated load, the braking system shall perform the following functions:

   1. Stop and hold the load hook when controls are released.

   2. Limit the speed of the load during lowering, with or without power, to a maximum of 120 percent of the rated lowering speed for the load being handled.

   3. Stop and hold the load hook in the event of a complete power failure.

b. The braking system shall have thermal capacity for the frequency of operation required by the service.

c. The braking system shall have provision for adjustments, where necessary, to compensate for wear.

8.1.6.2 Air-Powered Hoists

a. Under normal operating conditions with rated load and under test conditions with test loads up to 125 percent of rated load, the braking system shall perform the following functions:

   1. Stop and hold the load hook when controls are released.

   2. Prevent an uncontrolled lowering of the load in the event of a loss of air pressure.

b. The braking system shall have thermal capacity for the frequency of operation required by the service.

c. The braking system shall have provision for adjustments, where necessary, to compensate for wear.

8.1.6.3 Hand-Chain-Operated Hoists

The Hoist shall be designed so that when the actuating force is removed, it will automatically stop and hold any test load up to 125 percent of the rated load.

8.1.6.4 Manual-Lever-Operated Hoists

a. The hoist shall be equipped with a load-controlling mechanism.

b. The load-controlling mechanism shall perform the following functions under normal operating conditions with test loads up to 125 percent of rated capacity:

   1. Stop and hold the load when the lever force is removed and the lever stroke is completed.

   2. Provide for incremental movement of the load when lifting or lowering.

c. The friction brake mechanism shall have provision for adjustment where necessary to compensate for wear.

8.1.7 WIRE ROPE

a. Wire rope shall be of a construction specified by the hoist manufacturer or by a qualified person.

b. If a load is supported by more than one part of wire rope, the tension on the parts shall be equalized.

c. Socketing shall be done in the manner specified by the manufacturer of the assembly or the rope.

d. Eye splices shall be made in a manner recommended by a qualified person. Rope thimbles should be used in the eye.

e. Swaged or compressed fittings shall be applied as recommended by the rope, hoist, or fitting manufacturer or a qualified person.

f. Use rope having an independent wire-rope, wire-strand core, or other temperature-damage-resistant core if the rope will be exposed to ambient temperatures greater than 180 degrees F (82 degrees C).

g. The rope ends should be attached to the hoist in a manner to prevent disengagement throughout rated hook travel. No less than two wraps of rope shall remain on the anchorage of the hoist load sprocket (drum) when the hook is in its fully extended position, unless a lower-limit device is provided, in which case one wrap shall remain on each anchorage of the drum hoist.

8.1.8 LOAD CHAIN

8.1.8.1 Electric-Powered, Air-Powered, and Manual-Lever-Operated Hoists

a. Load chain may be either roller or welded link type (see Figure 8-9). Chain shall be pitched (calibrated) so as to pass over all load sprockets without binding.

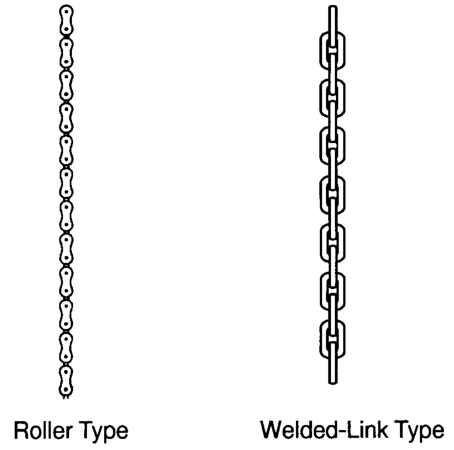

Reprinted from ASME B30.21-2005 by permission of The American Society of Mechanical Engineers. All rights reserved.

Figure 8-9. Load Chain

b. The load chain shall be proof-tested by the chain or hoist manufacturer with a load at least equivalent to 1.5 times the hoist's rated

load divided by the number of chain parts supporting the load.

c. If a load is supported by more than one part of load chain, the tension on the parts shall be equalized.

8.1.8.2 Hand-Chain-Operated Hoists

a. The hand chain shall be of a shape and pitch to fit the hand-chain wheel without binding or jamming under normal operating conditions.

b. The hand chain shall be guarded to prevent disengagement from the hand-chain wheel.

c. The hand chain shall withstand, without permanent distortion, a force of three times the pull required to life the rated load.

8.1.9 WEB STRAP

The following applies for manual-lever-operated hoists:

a. Web strap should be nylon, polyester, or similar synthetic material.

b. If a load is supported by more than one part of web strap, the tension on the parts shall be equalized.

c. End terminations shall be done in the manner specified by the manufacturer of the assembly or the web strap.

d. Eyes shall be made in a manner recommended by the hoist manufacturer or a qualified person.

e. Nylon and polyester web straps shall not be exposed to an ambient temperature greater than 200 degrees F (93 degrees C).

f. The web strap shall be attached to the hoist in a manner to prevent disengagement throughout rated hook travel; no less than two wraps of web strap shall remain on the hoist load sprocket (drum) when the hook is extended to its full rated lift.

8.1.10 OVERTRAVEL PROTECTION

8.1.10.1 Upper-Limit Switches/Devices

For electric- or air-powered hoists, the hoist shall be designed and constructed so that the load hook, either loaded or empty, shall not exceed the upper limit of travel. In lieu of a limit switch, a mechanism such as a slip clutch may be used.

8.1.10.2 Lower-Limit Switches/Devices

a. For electric-or air-powered hoists, the hoist shall not be installed where, during normal operating conditions, the hook can be lowered beyond rated hook travel unless the hoist is equipped with a lower-limit device. Lower-limit devices should be provided for hoists where the load block enters pits or hatchways in the floor.

b. For hand-chain-operated and manual-lever-operated hoists, before the load chain can be completely run out of the hoist, it shall be restrained in its fully extended position. The restraint shall be such that the unloaded hoist can withstand a lowering hand chain or operating lever force equivalent to twice the pull required to lift the rated load, or with the rated load on the hoist, a hand chain or operating lever force equivalent to the pull required to lift the rated load.

8.1.11 SUPPORT

Support structures, including trolleys and monorails, shall have a rated capacity at least equal to that of the hoist.

8.1.12 LOCATION

The hoist shall be installed only in locations that will permit the operator to remain clear of the load at all times.

8.1.13 LOAD RATING

The rated capacity shall not be exceeded except for properly authorized tests.

8.2 INSPECTIONS

8.2.1 HOIST SERVICE

Hoist service is defined as follows:

a. Normal service – operation with randomly distributed loads within the rated load limit, or uniform loads less than 65 percent of rated load for not more than 15 percent of the time for manual-lever-operated hoists or for not more than 25 percent of the time for electric- or air-powered hoists.

b. Heavy service – operation within the rated capacity that exceeds normal service.

c. Severe service – operating at normal or heavy service under abnormal operating conditions, (i.e., extreme temperatures, corrosive atmospheres).

8.2.2 INITIAL INSPECTION

Prior to their initial use, all new, repaired, or modified hoists shall be inspected by a qualified inspector to ensure compliance with the applicable provisions of ASME B30.11, B30.16, and B30.21. Dated and signed inspection records shall be kept on file and shall be readily available.

8.2.3 DAILY INSPECTION

a. Operators or other designated personnel shall visually inspect items such as the following at the beginning of each shift or prior to first use if the hoist has not been in regular service (records are not required):

    1. Controls and operating mechanisms for proper operation.

    2. Hoist upper-limit switch, as applicable, for proper operation.

    3. Lines, valves, and other parts of air systems for leakage.

    4. Hooks for cracks, deformation, and damage from chemicals (see Chapter 13, “Load Hooks,” for additional hook requirements).

    5. Hoist rope for kinking, crushing, birdcaging, and corrosion.

    6. Hoist chain for nicks, gouges, distortion, wear, cracks, and corrosion.

    7. Synthetic web strap for abrasive wear, knots, cuts, or tears, broken stitching, acid or caustic burns, melting or charring, or weld splatter.

    8. Hook latch, if used, for proper operation.

b. Operators or other designated personnel shall examine deficiencies and determine whether they constitute a safety hazard.

8.2.4 FREQUENT INSPECTION

a. Operators or other designated personnel shall visually inspect the hoist at the following intervals (records are not required):

    1. Normal service – monthly.

    2. Heavy service – weekly to monthly.

    3. Severe service – daily to weekly.

b. In addition to the requirements listed above in Daily Inspection, these inspections shall include the following:

    1. Hoist braking system for proper operation.

    2. Hoist rope or chain reeving for compliance with hoist manufacturer’s recommendations.

    3. Lever for bends, cracks, and the like.

    4. Observations during operation.

c. Examine deficiencies and determine whether a more detailed inspection is required.

8.2.5 PERIODIC INSPECTION

a. A qualified inspector shall perform a complete inspection at the following intervals:

   1. Normal service – yearly.

   2. Heavy service – semiannually.

   3. Severe service - quarterly

b. The qualified inspector shall examine deficiencies and determine whether they constitute a safety hazard and whether disassembly is required.

c. Dated and signed inspection records shall be kept on file and shall be readily available.

d. A sample load test and inspection form is included as Exhibit I, which appears at the end of this chapter. This form is intended to be a sample only, and is not intended to be mandatory.

8.2.5.1 Hoists

a. In addition to the requirements listed in Section 8.2.4, "Frequent Inspection," periodic inspections of hoists shall include the following:

   1. Bolts, rivets, nuts, and pins for being loose or absent.

   2. Check for suspect/counterfeit parts (see Terminology and Definitions, Chapter 1).

   3. Cracked or worn drums or sheaves.

   4. Worn, corroded, cracked, or distorted parts such as pins, bearings, shafts, gears, rollers locking, and clamping devices.

   5. Excessive wear on motor or load brakes.

   6. Excessive wear of chains, ropes, synthetic web strap, load sprockets, drums, sheaves, and chain stretch.

   7. Deterioration or damage of end connections and terminations of wire rope, load chains, and synthetic web.

   8. Hooks damaged from chemicals, cracks, any visibly apparent bend or twist from the plane of the unbent hook, or any distortion causing an increase in throat opening of 5% not to exceed 1⁄4 inch unless otherwise recommended by the manufacturer. See Chapter 13 for additional hook requirements.

   9. Hook-retaining nuts or collars and pins, welds, or riveting used to secure the retaining members.

   10. Suitable crack-detecting inspections for hooks, such as dye-penetrant or magnetic-particle inspections (performed when required by the inspector).

   11. Electrical apparatus for signs of pitting or any deterioration of controller contactors, limit switches, and push-button switches.

   12. Supporting structures and trolleys, if used, for continued ability to support the imposed loads.

   13. Warning labels for illegibility or absence.

8.2.5.2 Wire Rope

a. A qualified inspector shall inspect running rope at least annually. This inspection shall include examination of the entire length of rope, without detaching it from the hoist drum. More frequent intervals shall be determined by a qualified person and shall be based on such factors as expected rope life as determined by experience on the particular installation or similar installations, severity of environment, percentage of capacity lifts, frequency rates of operation, and exposure to shock loads. The qualified inspector shall carefully note any deterioration, such as described below, resulting in appreciable loss of original strength and determine whether further use of the rope constitutes an acceptable risk.

1. Reduction of rope size below nominal diameter, whether due to loss of core support, internal or external corrosion, or wear of outside wires. (see Table 8-1).

2. A number of broken outside wires and the distribution or concentration of such broken wires.

3. Worn outside wires.

4. Sections of rope that are normally hidden during inspection or maintenance procedures, such as parts passing over sheaves (these are points most subject to deterioration).

5. Corroded or broken wires at end connections.

6. Corroded, cracked, bent, worn, or improperly applied end connections.

7. Kinking, crushing, cutting, or unstranding.

Table 8-1. Maximum allowable rope reductions.

Rope diameter	Maximum allowable reduction from Nominal diameter
Up to 5/16 in. (8 mm)	1/64 in. (0.4 mm)
Over 5/16 in. to ½ in. (13 mm)	1/32 in. (0.8 mm)
Over ½ in to ¾ in. (19 mm)	3/64 in. (1.2 mm)
Over ¾ in. to 1 1/8 in. (29 mm)	1/16 in. (1.6 mm)
Over 1 1/8 in. to 1 ½ in. (38 mm)	3/32 in. (2.4 mm)

Reprinted from ASME B30.16-2007 by permission of The American Society of Mechanical Engineers. All rights reserved.

b. No precise rules can be given for determining the exact time to replace wire rope because many factors are involved. Safety depends largely on the use of good judgment by an appointed person in evaluating remaining strength in a used rope, after allowance for deterioration disclosed by inspection. Safety of rope operation depends on this remaining strength.

c. Conditions such as the following shall be reason for questioning rope safety and considering replacement:

1. In hoist ropes, 12 randomly distributed broken wires in one rope lay, or 4 broken wires in one strand in one rope lay.

2. Wear of one-third of the original diameter of outside individual wires.

3. Kinking, crushing, birdcaging, or any other damage resulting in distortion of the rope structure.

4. Evidence of heat damage from any cause.

5. Reductions from nominal diameter greater than those shown in Table 8-1.

d. The qualified inspector shall give special attention to end fastenings and shall examine ropes frequently at socketed fittings; on the development of two broken wires adjacent to this point, resocket or replace the rope. Resocketing shall not be attempted if the resulting rope length will be insufficient for proper operation. Those portions of the rope subjected to reverse bends and operation over small-diameter drums or sheaves shall be closely examined.

e. Replacement rope and connections shall have a strength rating at least as great as the original rope and connections furnished by the hoist manufacturer. Any deviation from the original size, grade, or construction shall be specified by a rope manufacturer, the hoist manufacturer, or a qualified person.

f. Never use discarded rope for slings.

8.2.5.3 Welded-Link Chain

a. A qualified inspector shall do the following during periodic inspections:

1. Operate the hoist under load in raising and lowering directions, and observe the operation of the chain and sprockets. The chain should feed smoothly into and away from the sprockets.

2. Make sure that, if the chain binds, jumps, or is noisy, first clean and properly lubricate it. If the trouble persists, inspect the chain and mating parts for wear, distortion, or other damage.

3. The chain should be cleaned before inspection. Examine visually for cracks, gouges, nicks, weld spatter, corrosion, and distorted links. Slacken the chain and move adjacent links to one side to inspect for wear at the contact points. If you observe wear or suspect stretching, measure the chain according to the hoist manufacturer's instructions. If instructions are not available, proceed as follows:

   i. Select an unworn, unstretched length of the chain (e.g., at the slack end).

   ii. Suspend the chain vertically under tension and, using a caliper-type gauge, measure the outside length of any convenient number of links approximately 12 in. (305 mm) to 14 in. (356 mm) overall.

   iii. Measure the same number of links in the used sections and calculate the percentage of increase in length.

   iv. If the used chain exceeds a hoist manufacturer's recommended length, or in the absence of such a recommendation, if the used chain is 1.5 percent longer than the unused chain for powered hoists or is 2.5 percent longer than the unused chain for hand-operated hoists, replace the chain.

   v. Examine the chain for gouges, nicks, corrosion, weld spatter, or distorted links. Any of these conditions shall be sufficient reason for questioning safety and considering replacement. Safety in this respect depends largely on the use of good judgment by an appointed person in evaluating the degree of damage.

4. No one except the chain manufacturer shall repair the load chain by welding or any other means.

5. Ensure that replacement chain is the same size, grade, and construction as the original chain furnished by the hoist manufacturer, unless otherwise recommended by the hoist manufacturer due to working conditions.

6. Load-chain links that pass over the hoist-load sprocket on edge (alternate to those that lie flat in the pockets) should be installed with the welds away from the center of the sprocket. This precaution is not required on idler sprockets, which change the direction but not the tension in the chain.

7. Ensure that replacement chain is installed without any twist between the hoist and an anchored end on either the loaded side or the slack side.

8. When a chain is replaced, disassemble and inspect the mating parts (sprockets, guides, stripper) for wear, and replace if necessary.

9. Never use discarded load chain for slings.

8.2.5.4 Roller Chain

a. A qualified inspector shall do the following during periodic inspections:

1. Test the hoist under load in raising and lowering directions, observing the operation of the chain and sprockets. If the chain binds, jumps or is noisy, clean and properly lubricate it. If the trouble persists, inspect the chain and mating parts for wear, distortion, or damage.

2. If you observe wear or suspect stretching, measure the chain according to the hoist manufacturer's instructions. If instructions are not available, proceed as follows:

   i. Suspend the hoist in normal position and apply a light load of approximately 100 lb (46 kg).

   ii. Select a 12-in. (305 mm) section of chain that normally travels over the load sprocket.

   iii. Determine elongation by measuring with a caliper from the edge of one chain pin to the corresponding edge of another pin. If elongation exceeds ¼ in. (6.3 mm) in 12 in. (305 mm) compared to new or unstretched chain values, replace the chain.

   iv. Inspect for twists. Replace if the twist in any 5-ft (1.52 m) section exceeds 15 degrees.

   v. Check for straightness in a plane perpendicular to the plane of the rollers. Replace if the chain has a bow exceeding ¼ in. (6.3 mm) in any 5-ft (1.52 m) section.

3. Make additional inspections by removing the chain from the hoist and cleaning it thoroughly. Carefully examine deficiencies such as those listed below and determine whether they constitute a safety hazard. Any deficiencies are reason for questioning chain safety and considering its replacement.

   i. Pins turned from original position.

   ii. Rollers that do not run freely with light finger pressure.

   iii. Joints that cannot be flexed by easy hand pressure.

   iv. Side plates that are spread open.

   v. Corrosion, pitting, or discoloration.

   vi. Gouges, nicks, or weld spatter.

4. Do not attempt to repair roller chain by welding or heating.

5. Ensure that replacement chain is the same size, grade, and construction as the original chain furnished by the hoist manufacturer unless otherwise recommended by the hoist manufacturer due to working conditions.

6. Never use discarded or new roller chain for slings.

8.2.5.5 Synthetic-Web Strap

a. No precise rules can be given for determining the exact time to replace web strap. Safety depends largely on the use of good judgment by an appointed person in evaluating remaining strength in a used web, after allowance for deterioration disclosed by inspection.

b. Conditions such as the following shall be reason for questioning continued use of the web strap or increasing the frequency of inspection:

   1. Severely worn end connections.

   2. Distortion of the web-strap structure.

   3. Evidence of any heat damage.

c. The web strap shall be removed from service when damage such as the following is discovered:

   1. Melting or charring.

   2. Acid or caustic burns.

   3. Weld spatter.

   4. Broken stitching.

   5. Cuts or tears.

   6. Damaged eyes or fittings.

   7. Abrasive wear.

   8. Knots

8.2.6 HOISTS NOT IN REGULAR SERVICE

a. A hoist that is not in regular service (idle for a period of 1 month or more, but less than 1 year) shall be inspected before being placed in service according to the requirements listed above in Section 8.2.4, "Frequent Inspection."

b. A hoist that is not in regular service (idle for a period of 1 year or more) shall be inspected before being placed in service according to the requirements listed above in Section 8.2.5, "Periodic Inspection."

c. The determination supporting these alternate inspection frequencies and procedures shall be made by a qualified person for each affected hoist. Documentation supporting this determination shall be kept readily available.

8.3 TESTING

8.3.1 OPERATIONAL TESTS

All new hoists shall be tested by the hoist manufacturer. All modified or repaired hoists or hoists that have not been used within the preceding 12 months shall be tested before being placed in service. All tests shall be done by a qualified inspector or under the direction of that inspector as detailed in the following paragraphs.

8.3.1.1 Electric- or Air-Powered Hoists

a. Check lifting and lowering (testing through complete rated lift length is not required).

b. Check operation of brakes.

c. Determine the trip-setting of limit devices by tests under no-load conditions. Conduct tests first by hand, if practical, and then under slowest speed obtainable. Test with increasing speeds up to maximum speed.

8.3.1.2 Hand-Chain-Operated Hoists

a. Check all functions of the hoist, including lifting and lowering, with the hoist suspended in an unloaded state.

b. After testing unloaded, apply a load of at least 50 lb (23 kg) multiplied by the number of load-supporting parts of chain to the hoist to check proper load control.

8.3.1.3 Manual-Lever-Operated Hoists

a. Check all functions of the hoist with the hoist suspended in an unloaded state.

b. After testing unloaded, apply a load of at least 100 lb (46kg) multiplied by the number of load-supporting parts of load line to the hoist to check proper load control.

8.3.2 RATED LOAD TEST

Test anchorages or suspensions shall be approved by a qualified person.

8.3.2.1 Electric- or Air-Powered Hoists

a. The manufacturer shall dynamically test new hoists as specified in Section 8.3.1.1, ("Electric- or Air-Powered Hoists"), steps a. and b., with a test load of at least 125 percent of the rated load. If the manufacturer cannot test the hoist, the user shall be notified and the test shall be accomplished at another location or job site by a qualified inspector or under the direction of that inspector.

b. A qualified inspector shall test hoists in which load suspension parts have been modified, replaced, or repaired as specified in Section 8.3.1.1, steps a. and b., by or under the direction of a qualified inspector, and a record of the test should be made. A designated or authorized person shall determine if repairs made to a hoist are extensive, and require a rated load test, or routine maintenance and require only an operational test. The applied test load shall not be less than 100 percent of the rated capacity of the hoist, or more than 125 percent of the rated capacity of the hoist unless otherwise recommended by the manufacturer or a qualified person. The replacement of load chain and rope is specifically excluded from this hoist test; however, a functional test of the hoist under a normal operating load should be made in accordance with 8.3.1., "Operational Tests," prior to putting the hoist back in service.

8.3.2.2 Hand-Chain-Operated or Manual-Lever-Operated Hoists

a. The manufacturer shall dynamically test new hoists with a test load of at least 125 percent of the rated capacity. If the manufacturer cannot test the hoist, the user shall be notified and the test shall be accomplished at another location or job site by a qualified inspector or under the direction of that inspector.

b. Hoists in which load suspension parts have been modified, replaced, or repaired shall be tested statically or dynamically by or under the direction of a qualified inspector, and a record of the test should be kept. A designated or authorized person shall determine if repairs made to a hoist are extensive and require a rated load test or are routing maintenance and require only an

operational test. The applied test load shall not be less than 100 percent of the rated capacity of the hoist or more than 125 percent of the rated capacity of the hoist, unless otherwise recommended by the manufacturer or a qualified person. The replacement of load chain is specifically excluded from this hoist load test; however, a functional test of the hoist should be made in accordance with Section 8.3.1.2, or 8.3.1.3, "Hand-Chain-Operated Hoists," and "Manually Lever-Operated Hoists," respectively, prior to putting the hoist back in service.

8.4 MAINTENANCE

a. A preventive maintenance program shall be established and be based on the hoist manufacturer's recommendations. If equipment maintenance procedures deviate from published manufacturer's recommendations, the alternate procedures shall be approved in advance by the manufacturer or another qualified person and be kept readily available. Dated maintenance records should be kept where readily available to appointed personnel.

b. Replacement parts shall be at least equal to the original manufacturer's specifications.

8.5 OPERATION

a. The following shall apply to all personnel involved in hoist operations.

b. At the initial stage of the planning process, an appointed person shall classify each lift into one of the DOE-specified categories (ordinary, critical, or preengineered production).

8.5.1 CONDUCT OF OPERATOR

a. Do not engage in any practice that will divert your attention while engaged in operating the hoist.

b. Do not operate equipment if you are physically or mentally unfit.

c. Familiarize yourself with the equipment and its proper care. If adjustments or repairs are necessary, or any damage is known or suspected, report it promptly to the appointed person. Notify the next operator of the problem upon changing shifts. Correct deficiencies before resuming normal operation.

d. Test all controls before beginning a shift. If any controls do not operate properly, adjust or repair them before beginning operations.

e. Operators are responsible for those operations under their direct control. Whenever there is doubt as to safety, consult with responsible management before handling the load.

f. Do not operate a hoist that bears an out-of-order sign or is otherwise tagged out-of-service.

g. If there is a tag, sign, or lock on electric- or air-powered equipment, do not energize the equipment until the tag, sign, or lock is removed by the person who placed it there or by an authorized person.

h. Do not close the main line disconnect device on powered equipment until you are certain that no one is on or adjacent to the hoist or carrier.

8.5.2 SIZE OF LOAD

Know the weight of the load and do not load the hoist beyond the rated capacity, except as provided for in Section 8.3, “Testing.”

8.5.3 ATTACHING THE LOAD

a. The supporting structure or anchoring means shall have a load rating at least equal to that of the hoist.

b. Use hoists only in areas that will allow you to be clear of the load.

c. Do not wrap the hoist rope or chain around the load.

d. Attach the load to the hook using slings or other approved devices.

e. Do not use chain or wire rope as a ground for welding.

f. Do not touch a welding electrode to the chain, wire rope, or any other part of the hoist or monorail system.

g. Operate hand-chain-operated hoists with hand power only and with no more than one operator per hand chain.

h. Do not use a lever extension (“cheater”) on manual-lever-operated hoists.

i. Properly seat the slings or other approved devices in the saddle of the hook before carrying out hoisting operations.

8.5.4 MOVING THE LOAD

a. Take care in hoisting to be certain that:

   1. Hoist ropes or chains are not kinked or twisted.

   2. The load does not contact any obstructions.

   3. Multiple-part ropes or chains are not twisted around each other.

b. Before starting to hoist, ensure that the rope or chain is properly seated on the drum, sheaves, or sprockets.

c. Before starting the hoist, be certain that all personnel are clear of the equipment.

d. Do not operate hoists until the hook is positioned above the center of gravity of the load, except when specifically authorized by an appointed person who has determined that the components of the hoist and its mounting will not be overstressed.

e. Do not move or lift a load more than a few inches until it is well balanced in a sling or lifting device.

f. Do not lift, lower, or travel the hoist while anyone is on the load or hook.

g. Avoid carrying loads above personnel.

h. Test the brakes each time a load approaching the rated capacity is handled by raising the load just enough to clear the floor or supports and checking for brake action. Continue the lift only after you are sure that the braking system is operating properly.

i. Do not lower a loaded wire-rope hoist drum beyond the point where less than two full wraps of wire rope remain on the drum.

j. Inch the hoist into engagement with a load, and avoid unnecessary stops and starts.

k. Do not perform side pulls with hoists except as specifically authorized by a qualified person.

l. If power goes off during operation of cab-operated equipment, immediately place all controllers in the OFF position. Before reuse, check operating motions for proper direction.

m. Do not leave a suspended load unattended unless specific precautions have been instituted and are in place.

n. Tag lines should be used as required to guide, snub, or otherwise control the load.

o. Take signals from only one person using the standard hand signals shown in Chapter 7, "Overhead and Gantry Cranes." *Obey a STOP signal regardless of who gives it*.

p. Lift the hoist load block above head level for storage when the equipment is not in use.

8.5.5 HOIST-LIMIT SWITCH

a. At the beginning of a shift, test the upper-limit switch of each hoist under no load conditions. If the hoist has a lower-limit switch, test it with no load before lowering any load that could bring the lower-limit switch into operation. Exercise extreme care; inch the block into the limit switch or run in at slow speed. If the limit switch does not operate properly, notify the designated person immediately.

b. If a lift is in progress during a shift change, this testing requirement is considered to have been satisfied for the completion of that lift. However, test the limit switch again before the next lift.

c. Never use the hoist-limit switch that controls the upper limit of travel of the load block as an operating control.

8.5.6 ORDINARY LIFTS

a. Hoisting and rigging operations for ordinary lifts require a designated leader. The designated leader shall be present at the lift site during the entire lifting operation. If the lift is being made by only one person, that person assumes all responsibilities of the designated leader.

b. Leadership designation may be by written instructions, specific verbal instructions for the particular job, or clearly defined responsibilities within the crew's organizational structure.

c. The designated leader's responsibility shall include the following:

   1. Ensure that personnel involved understand how the lift is to be made.

   2. Ensure that the weight of the load is determined, that proper equipment and accessories are selected, and that rated capacity is not exceeded.

3. Survey the lift site for hazardous/unsafe conditions.

4. Ensure that equipment is properly set up and positioned.

5. Ensure that a signaler is assigned, if required, and is identified to the operator.

6. Direct the lifting operation to ensure that the job is done safely and efficiently.

7. Stop the job when any potentially unsafe condition is recognized.

8. Direct operations if an accident or injury occurs.

d. The operator or other designated person shall visually examine the hoist in accordance with the requirements for a daily inspection described in Section 8.2, "Inspections."

e. A qualified person shall examine any deficiencies and determine whether they constitute a hazard. Correct these deficiencies before operating the hoist.

f. Load lines shall be checked after strain is put on them, before the load is lifted clear of the ground. If not plumb, the slings or equipment shall be repositioned so the the lines are plum before continuing.

8.5.7 PLANNED ENGINEERED LIFTS

Lifts in excess of the rated load may be required from time to time on a limited basis for specific purposes such as new construction or major repairs. Every planned engineered lift exceeding the rated load shall be treated as a special and separate event. Limitations and planned requirements shall be applicable, as follows:

a. Planned engineered lifts shall be limited to powered hoists having a load rating of 5 tons and above.

b. When planned engineered lifts are made, the load shall not exceed 125% of the hoist load rating, except as provided in para. 8.5.7.d.

c. Planned engineered lifts shall be limited to two occurrences on any hoist within any continuous 12 month period, except as provided in para. 8.5.7.d. If greater lift frequency is desired, consideration shall be given to rerating or replacing the hoist.

d. The hoist manufacturer shall be consulted if the planned engineered lift exceeds 125% of rated load or if the frequency of planned engineered lifts exceeds two during a continuous 12-month period.

e. Each planned engineered lift shall comply with the following requirements:

1. A written review of the hoist service history shall be prepared, including reference to previous planned engineered lifts, structural repairs, and modifications of original design

2. The design of the structural, mechanical, electrical, pneumatic, and hydraulic components of the hoist shall be reviewed, by means of applicable calculations for the load to be lifted, and approved by the hoist manufacturer or a qualified person, in accordance with accepted hoist design standards if the load to be lifted exceeds 125% of rated load, or if the frequency of planned engineered lifts exceeds two during a continuous 12-month period

3. The design of the hoist-supporting structure shall be reviewed and approved by a qualified person for conformance to applicable design criteria. The hoist support shall be inspected and any deterioration or damage shall be taken into consideration in design calculations for the load to be lifted.

4. The hoist shall be inspected in accordance with para. Section 8.2.5 just prior to making the lift.

5. The lift shall be made under controlled conditions under the direction of a designated person in accordance with a previously prepared lift plan. All persons in the area of the hoist shall be alerted that the lift is being made.

6. The operator shall test the hoist at the planned engineered load by lifting the load a short distance and setting the brakes. The lift shall only be continued if the brakes stop and hold the load. Any

failure to hold the load shall be corrected before proceeding with the lift.

7. The hoist shall be inspected in accordance with Section 8.2.5 after the lift is completed and prior to being used for the lifting of any other load.

8. A record of the planned engineered lift, including calculations, inspections, and all distances moved, shall be placed on file for availability to appointed personnel.

f. The rated load test specified in Section 8.3.2 is not applicable to planned engineered lift provisions.

8.5.8 CRITICAL LIFTS

See Chapter 2, "Critical Lifts," for critical-lift requirements.

INTENTIONALLY BLANK

Exhibit I is intended to be a sample form only.
The equipment manufacturer's inspection/testing
criteria supercede any other criteria.
In cases where the equipment manufacturer does not include
inspection/testing criteria, other forms developed to facilitate
required inspection/testing are acceptable.

INTENTIONALLY BLANK

EXHIBIT I
(SAMPLE FORM)

HOIST LOAD TEST

INSPECTED BY _____

HOIST ID# _____LOCATION_____DATE_____

Notes: 1. Load test prior to initial use, at 125% of rated capacity, all new hoists or hoists in which load-sustaining parts have been modified, repaired, or replaced. Test weights shall be accurate to within –5%, +0% of stipulated values. Load test at 100% of rated capacity hoists with overload devices. Test the function of the overload device.

2. Qualified inspector shall verify all steps as listed below.

3. Craftsmen will initial all tests, work, and inspections completed below.

_____ 1. Perform the annual periodic inspection. Check unit for proper operation.

_____ 2. HAND-CHAIN-OPERATED HOISTS ONLY. Check brake mechanism for work glazed, or contaminated disks, worn pawls, cams, or ratchets. Check for broken, corroded, or stretched pawl springs. Repair as needed.

_____ 3. ELECTRIC- AND AIR-POWERED HOISTS. Check:

a. All functional operating mechanisms for maladjustment interfering with proper operation

b. Limit switches or devices for proper operation

c. External evidence of damage or excessive wear of load sprockets, idler sprockets, and drums or sheaves

d. External evidence of wear on motor or load brake

e. Electrical apparatus for signs of pitting or any deterioration of visible controller contacts

f. All anchorage or hoist suspensions.

_____ 4. Set hoist up for load test and inspection. Where applicable, ensure that the load chart is legible.

_____ 5. Perform load test using the required test weights (See Note 1) and appropriate slings. Measure a length of the load chain under tension; measure a length of 15 links. If wire rope is used, measure the diameter.

IF HOIST IS EQUIPPED WITH A TROLLEY:

_____ 1. Mount hoist on a monorail.

_____ 2. Rig test weight to load hook (see step 4 above).

_____ 3. Perform load test moving weight along monorail. Observe hoist and trolley. Observe performance of all load-bearing components.

_____ 4. Lower test weight to floor. Note performance of hoist during lowering operation. Remove rigging.

EXHIBIT I (continued)

HOIST LOAD TEST

At the completion of the load test, inspect the following items.

1. Visually inspect and remeasure the load chain and/or hoist rope after the load test. Check for deformed or broken links, stretch, etc.
2. Inspect load hook and suspension hook for bending or twisting.

LOAD HOOK:	PREVIOUS	PRESENT
Qualified Inspector Verify _____	Throat Opening _____	_____
Qualified Inspector Verify _____	Hook Twist _____	_____
SUSPENSION HOOK:		
Qualified Inspector Verify _____	Throat Opening _____	_____
Qualified Inspector Verify _____	Hook Twist _____	_____

Qualified inspector shall perform nondestructive tests on hook by visual examination, liquid penetrant examination, or magnetic particle examination.
Acceptance: No cracks, linear indications, laps, or seams.

Hooks with more than 5% normal (new hook) throat opening not to exceed 1⁄4 in. (or as recommended by the manufacturer) shall be replaced. Hooks with any visibly apparent bend or twist from the plane of the unbent hook (new hook) shall be replaced. Hooks having more than 10% wear in the bowl section or 5% elongation of the shank shall be replaced. Lubricate hook bearing and latch pin as applicable.

Establish three marks, A, B, and C, with a center punch. For ease in measuring, set distances on an even number of inches.

BEFORE LOAD TEST

Length AB _____ in
Length BC _____ in

AFTER LOAD TEST

Length AB _____ in
Length BC _____ in

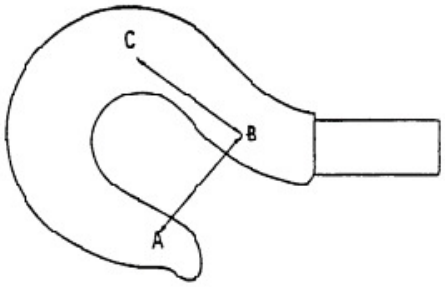

Check for:

1. Wear and deformation
2. Cracks
3. Signs of opening between Point A and Point B.

Equipment Operator

Actual Load Test _____ lb Qualified Inspector Verify Load Test _____ Date _____

EXHIBIT II
(SAMPLE FORM)

UNDERHUNG HOIST PERIODIC INSPECTION REPORT

HOIST # : _____ MODEL: _____ LOCATION: _____

STATUS CODE: [- O.K., A – Adjusted, R – Repaired, NR – Needs Repair, N/A – Not Applicable

	CODE	COMMENT		CODE	COMMENT
Housing			**Cable**		
- Distortion			-Broken Wires		
- Cracks			- End Connections		
- Loose Hardware			- Excess Wear		
- Warning Label			- Kinked or Distorted		
			- Corrosion		
Support Structure			- Heat Damage		
- Worn or distorted Trolley					
- Load Beam Condition			**Chains**		
- End Stops			- Binding		
			- Cracked		
Internal Inspection			- Twisted		
- Brake Pad Condition			- Distorted		
- Lubrication			- Corroded		
- Excess Oil			- Excess Wear		
- Sheaves			- Worn Chain Guide		

EXHIBIT II (continued)
(SAMPLE FORM)

UNDERHUNG HOIST PERIODIC INSPECTION REPORT

STATUS CODE: [- O.K., A – Adjusted, R – Repaired, NR – Needs Repair, N/A – Not Applicable

	CODE	COMMENT		CODE	COMMENT
Hook			**Sheaves**		
- Loose Retaining Hardware			-Excess Wear		
- Cracks			- Cracked or Scored		
- Excess Wear			- Bearing Noise		
- Bent					
- Spreading			**Final Operations**		
- Rotating Freely			- Free and Easy		
- Latch			- Inspection Tag Update		

Comments: Note any potential hazards or malfunctions:

CIRCLE ONE: PASS FAIL

INSPECTOR (Print): _____ SIGNATURE: _____ Date: _____

CHAPTER 9
MOBILE CRANES

This chapter specifies operation, inspection, maintenance, and testing requirements for the use of mobile cranes and implements the requirements of ASME B30.5 ("Mobile and Locomotive Cranes") (for latest ASME standards, see http://catalog.asme.org/home.cfm?Category=CS).

9.1 GENERAL 9-1
- 9.1.1 Operator Training/Qualification 9-1
- 9.1.2 Load Limits 9-1
- 9.1.3 Load Rating Chart 9-1
- 9.1.4 Load Hoist Brakes 9-6
- 9.1.5 Power-Controlled Lowering 9-6
- 9.1.6 Booms 9-6
- 9.1.7 Counterweight 9-6
- 9.1.8 Rerating 9-6
- 9.1.9 Maintenance History 9-6
- 9.1.10 Design Standards 9-6

9.2 INSPECTIONS 9-7
- 9.2.1 General 9-7
- 9.2.2 Initial Inspection 9-7
- 9.2.3 Daily Preoperational Check 9-7
- 9.2.4 Monthly Inspection 9-7
- 9.2.5 Frequent Inspection 9-7
- 9.2.6 Periodic Inspection 9-8
  - 9.2.6.1 Cranes 9-8
  - 9.2.6.2 Hydraulic and Pneumatic Hose, Fittings, and Tubing 9-9
  - 9.2.6.3 Hydraulic and Pneumatic Pumps and Motors 9-9
  - 9.2.6.4 Hydraulic and Pneumatic Valves 9-9
  - 9.2.6.5 Hydraulic and Pneumatic Cylinders 9-9
  - 9.2.6.6 Hydraulic Filters 9-9
  - 9.2.6.7 Wire Rope 9-9
- 9.2.7 Load Hooks/Load Blocks 9-11
- 9.2.8 Cranes Not in Regular Use 9-11

9.3 TESTING 9-12
- 9.3.1 Operational Tests 9-12
- 9.3.2 Rated Load Test 9-12

9.4 MAINTENANCE 9-13
- 9.4.1 Preventive Maintenance 9-13
- 9.4.2 Maintenance Procedures 9-13
- 9.4.3 Wire-Rope Maintenance 9-13

9.5 OPERATION 9-15
- 9.5.1 Conduct of Operator 9-15
  - 9.5.1.1 Traveling the Machine 9-16
  - 9.5.1.2 Making Adjustments or Repairs 9-16
  - 9.5.1.3 Ensuring Stability 9-17
  - 9.5.1.4 Further Safety Considerations 9-18
- 9.5.2 Operating Near Power Lines and Transmitter Towers 9-18

CHAPTER 9
MOBILE CRANES

9.5.2.1 Crane Operations De-Energized and Grounded Electrical Power Lines 9-19
9.5.2.2 Power Lines Energized, Crane Operating Less Than Erected/Fully Extended Boom Length Away From Prohibited Zone 9-19
9.5.2.3 Crane Operations are Within the Prohibited Zone and the Power Lines are Energized....9-22
9.5.2.4 Crane in Transit with no Load and Boom Lowered....9-22
9.5.2.5 Crane Operations Near Transmitter Towers 9-22
9.5.3 Hoist Limit Switch....9-22
9.5.4 Standard Hand Signals....9-25
9.5.5 Identification of Signalers....9-25
9.5.6 Standard Voice Signals....9-25
9.5.7 Special Signals....9-25
9.5.8 Size of Load....9-25
9.5.9 Attaching the Load....9-25
9.5.10 Moving the Load....9-25
9.5.11 Ordinary Lifts 9-29
9.5.12 Critical Lifts....9-30

EXHIBIT I Mobile Crane Load Test 9-33
EXHIBIT II Mobile Crane Daily Pre-Operational Check 9-37
EXHIBIT III Mobile Crane Frequent Inspection Report....9-41
EXHIBIT IV Mobile Crane Periodic Inspection Report....9-43

9.1 GENERAL

This chapter applies to commercial truck-mounted cranes; crawler cranes; locomotive cranes; wheel-mounted cranes, multiple control stations; wheel-mounted cranes, single control station; and any variation that retains the same fundamental characteristics. These cranes have a superstructure capable of rotating 360 degrees mounted on a carrier and have boom raising and lowering capabilities.

9.1.1 OPERATOR TRAINING/QUALIFICATION

Operators of mobile cranes shall be trained and qualified as required in Chapter 6, "Personnel Qualification and Training."

9.1.2 LOAD LIMITS

a. Since the load rating for mobile cranes may be based on stability and hydraulic or structural competence, load ratings established by the manufacturers shall not be exceeded in operational application.

b. No crane shall be loaded beyond its rated capacity, except for load test purposes as described in Section 9.3, "Testing."

c. When loads are to be handled that are limited by hydraulic or structural competence rather than by stability, the appointed person shall ensure that the weight of a load approaching rated capacity has been determined within -10 percent, +0 percent before it is lifted

9.1.3 LOAD RATING CHART

a. Durable rating chart(s) with legible letters and figures shall be provided with each crane and attached in a location accessible to the operator while at the controls. See Table 9-1 for a sample load rating chart. The data and information to be provided on these charts shall include, but not be limited to, the following:

    1. A full and complete range of manufacturer's crane load ratings at all stated operating radii, boom angles, work areas, and all stated boom lengths and configurations, jib lengths and angles (or offset), as well as alternate ratings for use and nonuse of optional equipment on the crane, such as outriggers and extra counterweights, that affect ratings.

    2. A work area chart for which capacities are listed in the load rating chart (see sample in Figure 9-1).

    3. Where ratings are limited by structural, hydraulic, or factors other than stability, the limitations shall be shown and emphasized on the rating charts.

    4. In areas where no load is to be handled, the work area figure and load rating chart shall state that information.

    5. Recommended reeving for the hoist lines shall be shown.

b. In addition to the data required on the load rating chart, the following information shall be shown either on the rating chart or in the operating manual:

    1. Recommended parts of the hoist reeving, and size and type of rope for various crane loads.

    2. Recommended boom hoist reeving diagram, where applicable; size, type, and length of rope.

    3. Tire pressure, where applicable.

    4. Cautionary or warning notes relative to limitations on equipment and operating procedures, including indication of the least stable direction.

    5. Position of the gantry and requirements for intermediate boom suspension, where applicable.

    6. Instructions for boom erection and conditions under which the boom, or boom and jib combinations, may be raised or lowered.

    7. Whether the hoist-holding mechanism is automatically controlled or manually

controlled, whether free-fall is available, and whether any combination of those exists.

8. The maximum telescopic travel length of each boom telescopic section.

9. Whether sections are telescoped with power or manually.

Table 9-1. Sample Load Rating Chart

This table is an example of the type of load rating chart that should be included in each crane.

Manitowoc Model 3900 Liftcrane Extra-Heavy Boom

Working Radius	50'	60'	70'	80' lbs.	90'	100'	120'	140'
12	120 000	120 000						
14	111 200	110 800	109 000					
16	104 200	103 600	102 700	100 000	95 000			
18	97 800	97 400	97 000	96 600	92 500	90 000		
20	93 200	92 400	91 600	90 600	89 600	86 000	83 000	
22	87 800	86 800	85 800	84 800	83 800	82 800	80 000	
24	83 400	81 200	80 300	79 400	78 700	77 800	75 200	66 500
26	75 900	75 500	74 700	73 900	73 200	72 600	70 500	63 100
28	68 100	67 700	67 300	66 900	66 400	65 800	64 000	59 800
30	61 700	61 300	60 900	60 500	60 000	59 400	58 500	56 400
32	56 500	56 100	55 700	55 300	54 800	54 200	53 300	52 300
34	52 000	51 600	51 200	50 800	50 300	49 700	48 800	47 800
36	48 100	47 700	47 300	46 900	46 400	45 800	44 900	43 900
38	44 700	44 300	43 900	43 500	43 000	42 400	41 500	40 500
40	41 700	41 300	40 900	40 500	40 000	39 400	38 500	37 500
42	39 100	38 700	38 300	37 900	37 400	36 800	35 900	34 900
44	36 800	36 400	36 000	35 600	35 100	34 500	33 600	32 600
46	34 700	34 300	33 900	33 500	33 000	32 400	31 500	30 500
48	32 900	32 500	32 100	31 700	31 200	30 600	29 700	28 700
50	31 200	30 800	30 400	30 000	29 500	28 900	28 000	27 000
52		29 300	28 900	28 500	28 000	27 400	26 500	25 500
54		27 900	27 500	27 100	26 600	26 000	25 100	24 100
56		26 500	26 100	25 700	25 200	24 600	23 700	22 700
58		25 300	24 900	24 500	24 000	23 400	22 500	21 500
60		24 200	23 800	23 400	22 900	22 300	21 400	20 400
65			21 300	20 900	20 400	19 800	18 900	17 900
70			19 300	18 900	18 400	17 800	16 900	15 900
75				17 100	16 600	16 000	15 100	14 100
80				15 700	15 200	14 600	13 700	12 700
85					13 900	13 300	12 400	11 400
90					12 700	12 100	11 200	10 200
95						11 100	10 200	9 200
100						10 200	9 300	8 300
110							6 800	5 600
120							4 500	3 840

NOTES:

a. Above ratings are maximum recommended working loads. Loads between sold lines are computed at 75% of tipping load across treads; with machine on firm, level ground. Loads outside solid lines are limited by strength of boom.

b. For booms 80 ft and longer, use cambered center section; for booms 100 ft and longer, use deep section inserts.

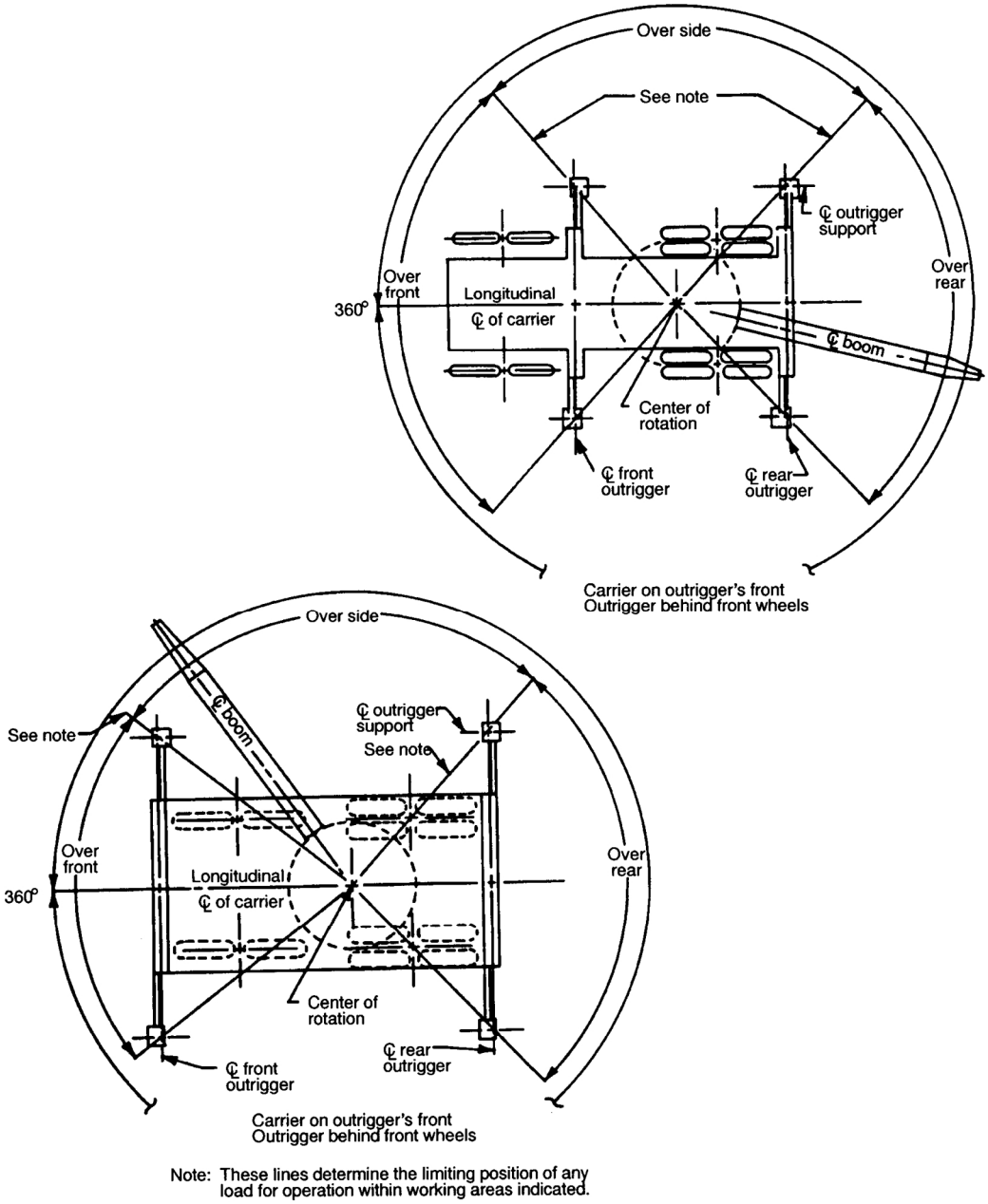

Reprinted from ASME B30.5-2004 by permission of The American Society of Mechanical Engineers. All rights reserved.

Figure 9-1. Sample work area chart.

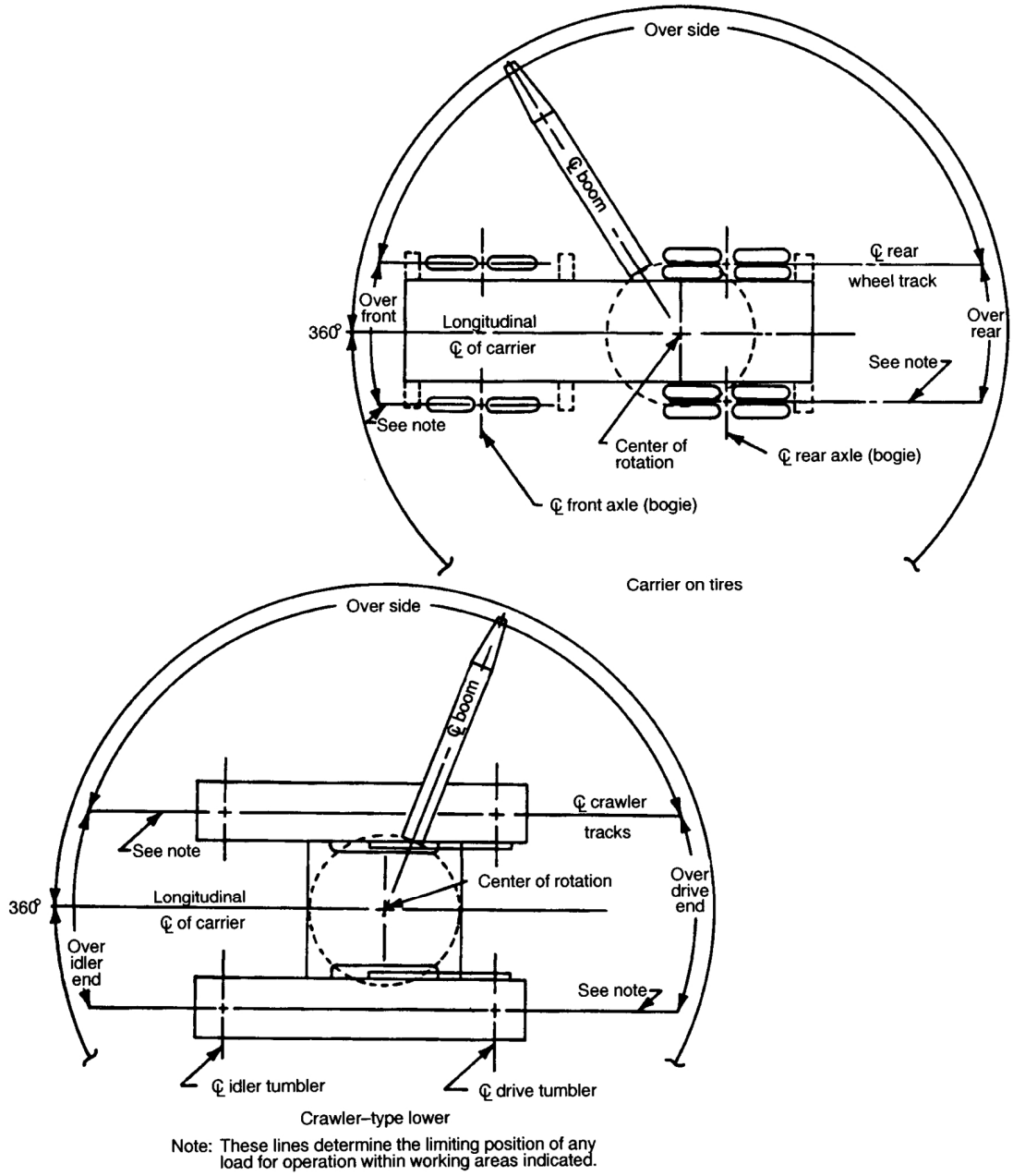

Reprinted from ASME B30.5-2004 by permission of The American Society of Mechanical Engineers. All rights reserved.

Figure 9-1. (continued).

10. The sequence and procedure for extending and retracting the telescopic boom section.

11. Maximum loads permitted during the actual boom-extending operation and any limiting conditions or cautions.

12. Hydraulic relief valve settings specified by the manufacturer.

9.1.4 LOAD HOIST BRAKES

When power-operated brakes that have no continuous mechanical linkage between the actuating and braking means are used, an automatic means shall be provided to set the brake to prevent the load from falling in event of loss of brake-actuating power.

9.1.5 POWER-CONTROLLED LOWERING

A power-controlled lowering system shall be provided and shall be capable of handling rated loads and speeds as specified by the manufacturer of the crane.

9.1.6 BOOMS

a. Booms, boom sections, and jibs shall be clearly identified and shall be used only for the purpose recommended by the manufacturer.

b. Lattice booms shall meet the performance requirements of SAE J987, "Crane Structure, Method of Test" (see Chapter 16, "References").

9.1.7 COUNTERWEIGHT

a. Cranes shall not be operated without the ballast or counterweight being in place as specified by the crane manufacturer. Under specific conditions, such as during crane assembly, unusual boom configurations, etc., the crane manufacturer's recommendations for the amount of ballast or counterweight shall be adhered to.

b. Ballast or counterweight as specified by the manufacturer shall not be exceeded.

9.1.8 RERATING

a. Cranes may be modified or rerated providing such modifications are analyzed thoroughly by a qualified engineer or manufacturer of cranes. Such action must be approved by the cognizant safety organization.

b. When rerated, crawler, truck, and wheel-mounted cranes shall be tested in accordance with SAE J765, "Crane Load Stability Test Code."

c. A rerating test report shall be readily available.

d. No cranes shall be rerated in excess of the manufacturer's original load ratings.

9.1.9 MAINTENANCE HISTORY

The maintenance history of the crane shall be retained throughout it service life.

9.1.10 DESIGN STANDARDS

a. Structural, mechanical, and electrical components of the crane design shall meet accepted crane design standards, such as PCSA-4, "Mobile Power Crane and Excavator Standards and Hydraulic Crane Standards."

b. The safety features and operation shall conform, at a minimum, to the provisions of ASME B30.5, "Mobile and Locomotive Cranes."

9.2 INSPECTIONS

9.2.1 GENERAL

Equipment shall operate with a smooth, regular motion without any hesitation, abnormal vibration, binding, gross shimmy, or irregularity. There shall be no apparent damage, excessive wear, or deformation of any load-bearing part of the equipment. All safety devices, load indicators, boom angle and radius indicators, controls, and other operating parts of the equipment shall be checked during each inspection and shall be in good working order.

9.2.2 INITIAL INSPECTION

Prior to initial use, all new or modified cranes shall be inspected as required in Section 9.2.6, "Periodic Inspection," by a qualified inspector to ensure compliance with the applicable provisions of this chapter. Dated and signed inspection reports shall be kept on file and shall be readily available.

9.2.3 DAILY PREOPERATIONAL CHECK

a. Operators or other designated personnel shall visually inspect items such as the following each day or prior to use if the crane has not been in regular service (records are not required):

   1. All control mechanisms for maladjustment interfering with proper operation.

   2. Crane hooks and latches for deformation, cracks, and wear.

   3. Hydraulic systems for proper oil level.

   4. Lines, tanks, valves, pumps, and other parts of air or hydraulic systems for leakage.

   5. Hoist ropes for kinking, crushing, birdcaging, and corrosion.

   6. Anti-two-block, two-block warning, and two-block damage prevention systems for proper operation.

   7. Booms for damage or deformation of structural components.

b. Operators or other designated personnel shall examine deficiencies and determine whether they constitute a safety hazard.

9.2.4 MONTHLY INSPECTION

a. The operator or other designated person shall visually inspect the following items for damage, wear, or other deficiency that might reduce capacity or adversely affect the safety of the crane:

   1. Critical items such as brakes and crane hooks.

   2. Hoist ropes.

b. Lower the hook block to its lowest position and examine for any condition that could result in an appreciable loss of strength.

c. Hooks for cracks, deformation, damage from chemicals, latch engagement (if provided), and evidence of heat damage. (See Chapter 13, "Load Hooks," for additional hook requirements).

d. A hoist rope with any of the conditions noted in the replacement criteria in Section 9.2.6 shall be removed from service and replaced.

e. Signed and dated inspection records shall be kept on file and shall be readily available.

F. Before the crane is returned to service, correct deficiencies that could reduce its capacity or adversely affect its safety.

9.2.5 FREQUENT INSPECTION

a. Operators or other designated personnel shall visually inspect the crane at daily to monthly intervals (records are not required).

b. These inspections shall, in addition to the requirements of Section 9.2.3, "Preoperational Check," include the following:

1. All control mechanisms for maladjustment, excessive wear, and contamination by lubricants or other foreign matter that could interfere with proper operation.

2. All safety devices for malfunction.

3. Rope reeving for noncompliance with crane manufacturer's recommendations.

4. Electrical apparatus for malfunctioning, signs of excessive deterioration, and accumulation of dirt or moisture.

5. Tires for recommended inflation pressure.

6. Boom sections for damaged, deformed, or missing structural members or parts.

c. Operators or other designated personnel shall examine deficiencies and determine whether a more detailed inspection is required.

9.2.6 PERIODIC INSPECTION

a. Complete inspections of the crane shall be performed by a qualified inspector at 1- to 12-month intervals, depending on the crane's activity, severity of service, and environment.

b. The qualified inspector shall examine deficiencies and determine whether they constitute a hazard.

c. Dated and signed inspection records shall be kept on file and shall be readily available.

d. A sample load test form is included as Exhibit I, which appears at the end of this chapter. This form is intended to be a sample only and is not intended to be mandatory.

e. These inspections shall, in addition to the requirements of Sections 9.2.4, "Monthly Inspection," and 9.2.5, "Frequent Inspection," include the following.

9.2.6.1 Cranes

Inspect for:

a. Deformed, cracked, or corroded members in the crane structure and entire boom.

b. Bolts, rivets, nuts, and pins for being loose or absent.

c. Check for suspect/counterfeit parts (see Terminology and Definitions, Chapter 1).

d. Cracked or worn sheaves and drums.

e. Hooks damaged from chemicals, deformation, or cracks, any visibly apparent bend or twist from the plane of the unbent hook, or any distortion causing an increase in throat opening of 5% not to exceed 1⁄4 in. unless otherwise recommended by the manufacturer. Dye-penetrant, magnetic-particle, or other suitable crack-detecting inspections should be performed at least once a year. See Chapter 13, "Load Hooks," for additional hook requirements.

f. Worn, cracked, or distorted parts such as pins, bearings, shafts, gears, rollers, and locking devices.

g. Excessive wear on brake and clutch system parts, linings, pawls, and ratchets.

h. Load, boom angle, and other operating aids over their full ranges for any significant inaccuracies (if calibration is required, it shall be done by a qualified person).

i. Gasoline, diesel, electrical, or other power plants for improper performance or noncompliance with safety requirements.

j. Radiators and oil coolers, for leakage, improper performance, or blockage of air passages.

k. Excessive wear of chain drive sprockets and excessive chain stretch.

l. Steering, braking, and locking devices, for malfunctioning.

m. Excessively worn or damaged tires.

n. Rust on piston rods and control valves when crane has been idle.

9.2.6.2 Hydraulic and Pneumatic Hose, Fittings, and Tubing

Inspect for:

a. Evidence of leakage at the surface of the flexible hose or its junction with the metal couplings.

b. Blistering or abnormal deformation of the outer covering of the hydraulic or pneumatic hose.

c. Leakage at threaded or clamped joints that cannot be eliminated by normal tightening or recommended procedures.

d. Evidence of excessive abrasion or scrubbing on the outer surface of a hose, rigid tube, or fitting (means shall be taken to eliminate the interface of elements in contact or to otherwise protect the components).

9.2.6.3 Hydraulic and Pneumatic Pumps and Motors

Inspect for:

a. Loose bolts or fasteners.

b. Leaks at joints between sections.

c. Shaft seal leaks.

d. Unusual noises or vibration.

e. Loss of operating speed.

f. Excessive heating of the fluid.

g. Loss of pressure.

9.2.6.4 Hydraulic and Pneumatic Valves

Inspect for:

a. Cracks in valve housing.

b. Improper return of spool to neutral position.

c. Leaks at spools or joints.

d. Sticking spools.

e. Failure of relief valves to attain correct pressure setting (relief valve pressures shall be checked as specified by the manufacturer).

9.2.6.5 Hydraulic and Pneumatic Cylinders

Inspect for:

a. Drifting caused by fluid leaking across the piston.

b. Rod seal leakage.

c. Leaks at welded joints.

d. Scored, nicked, or dented cylinder rods.

e. Dented case (barrel).

f. Loose or deformed rod eyes or connecting joints.

9.2.6.6 Hydraulic Filters

Evidence of rubber particles on the filter element may indicate deterioration of the hose, “O” ring, or other rubber components. Metal chips or pieces on the filter may denote failure in pumps, motors, or cylinders. Further checking will be necessary to determine the origin of the problem before corrective action can be taken.

9.2.6.7 Wire Rope

a. A qualified inspector shall inspect wire ropes at least annually. More frequent intervals shall be determined by a qualified person and shall be based on such factors as expected rope life as determined by severity of environment, percentage of capacity lifts, frequency rates of operation, and exposure to shock loads. The qualified inspector shall carefully note any deterioration, such as described below, that results in appreciable loss of original strength and determine whether further use of the rope constitutes an acceptable risk. This inspection shall include examination of the entire rope length without detaching it from the drum.

   1. Reduction of rope size below nominal diameter, whether due to loss of core

support, internal or external corrosion, or wear of outside wires (see Table 9-2).

Table 9-2. Maximum allowable rope reductions.

Rope diameter	Maximum allowable reduction from nominal diameter
Up to 5/16 in. (8 mm)	1/64 in. (0.4 mm)
Over 5/16 in. to ½ in. (13 mm)	1/32 in. (0.8 mm)
Over ½ in to ¾ in. (19 mm)	3/64 in. (1.2 mm)
Over ¾ in. to 1 1/8 in. (29 mm)	1/16 in. (1.6 mm)
Over 1 1/8 in. to 1 ½ in. (38 mm)	3/32 in. (2.4 mm)

Reprinted from ASME B30.5-2004 by permission of The American Society of Mechanical Engineers. All rights reserved.

2. The number and distribution or concentration of broken outside wires.

3. Worn outside wires.

4. Corroded or broken wires at end connections.

5. Corroded, cracked, bent, worn, or improperly applied end connections.

6. Kinking, crushing, cutting, or unstranding.

b. The qualified inspector shall take care when inspecting running rope where rapid deterioration could occur, such as in the following:

1. Sections in contact with saddles, equalizer sheaves, or other sheaves where rope travel is limited.

2. Sections of the rope at or near terminal ends where corroded or broken wires may protrude.

c. The qualified inspector shall take care when inspecting certain ropes such as the following:

1. Rotation-resistant ropes, because of their higher susceptibility to damage. The internal deterioration of rotation-resistant ropes may not be readily observable.

2. Boom hoist ropes, because of the difficulties of inspection and the important nature of these ropes.

d. No precise rules can be given for determining the exact time to replace wire rope because many factors are involved. Safety in this respect depends largely on the use of good judgment by an appointed person in evaluating remaining strength in a used rope, after allowance for deterioration disclosed by inspection. Safety of rope operation depends on this remaining strength.

e. Removal criteria for wire rope replacement shall be as follows:

1. In running ropes, 6 randomly distributed broken wires in one rope lay, or 3 broken wires in one strand in one rope lay.

2. In standing ropes, more than two broken wires in one lay in sections beyond end connections or more than one broken wire at an end connection.

3. In rotation resistant ropes, two randomly distributed broken wires in six rope diameters or four randomly distributed broken wires in thirty rope diameters.

4. One outer wire broken at the point of contact with the core of the rope that has worked its way out of the rope structure and protrudes or loops out from the rope structure; additional inspection of this part of the rope is required.

5. Wear of one-third the original diameter of outside individual wires.

6. Kinking, crushing, birdcaging, or any other damage resulting in distortion of the rope structure.

7. Evidence of heat damage from any cause.

8. Reduction from nominal diameter greater than the amounts listed in Table 9-2.

f. All rope that has been idle for a month or more due to shutdown or storage of a crane on which it is installed shall be inspected before it is placed in service. This inspection shall be for all types of deterioration and shall be performed by an appointed person whose approval shall be required before further use of the rope. A written and dated report of the rope condition shall be filed.

g. In order to establish data as a basis for judging the proper time for replacement, a continuing inspection record shall be maintained.

h. Replacement rope shall be the same size, grade, and construction as recommended by the crane manufacturer, unless otherwise recommended by a rope or crane manufacturer due to actual working-condition requirements.

i. Never use discarded wire rope for slings.

9.2.7 LOAD HOOKS/LOAD BLOCKS

Load hooks/load blocks that have been changed out shall be inspected by a qualified inspector before returning the crane to service. Inspection records shall be retained throughout the service life of the hook or load block and shall be readily available.

9.2.8 CRANES NOT IN REGULAR USE

a. A crane that has been idle for 1 month or more but less than 6 months shall be given an inspection according to the requirements of Section 9.2.5 before being placed in service.

b. A crane that has been idle for more than 6 months shall be given a complete inspection according to the requirements of Section 9.2.6 before being placed in service.

c. Standby cranes shall be inspected at least semiannually, according to the requirements of Section 9.2.6. Cranes exposed to adverse environments should be inspected more frequently

d. The determination supporting these alternate inspection frequencies and procedures shall be made by a qualified person for each affected crane. Documentation supporting this determination shall be kept readily available.

.

9.3 TESTING

9.3.1 OPERATIONAL TESTS

The following shall be tested during an initial test:

a. Load lifting and lowering mechanisms.

b. Boom lifting and lowering mechanisms.

c. Boom extension and retraction mechanism.

d. Swinging mechanism.

e. Travel mechanism.

f. Safety devices.

9.3.2 RATED LOAD TEST

a. Prior to initial use, all cranes in which load-sustaining parts have been modified, replaced, or repaired shall be load-tested by a qualified inspector or under the direction of that inspector. All rated load tests shall be performed in accordance with manufacturer's recommendations. A designated or authorized person shall determine if repairs made to a crane are extensive and require a rated load test, or if repairs are routine maintenance and require only operational testing. The replacement of rope is excluded from this requirement. However, a functional test of the crane under a normal operating load should be made prior to putting it back in service.

b. Test weights shall not exceed 110 percent of the rated capacity and shall be accurate to within –5 percent, +0 percent of stipulated values.

NOTE: Load tests shall not be conducted in locations where the lift meets the definition of a critical lift (see Chapter 1, "Terminology and Definitions").

c. A written report shall be furnished by the inspector showing test procedures and confirming the adequacy of repairs or alterations. Test reports shall be kept on file and shall be readily available to appointed personnel.

9.4 MAINTENANCE

9.4.1 PREVENTIVE MAINTENANCE

a. A preventive maintenance program shall be established and based on the recommendation of the crane manufacturer. If equipment maintenance procedures deviate from published manufacturer's recommendations, the alternate procedures shall be approved in advance by the manufacturer or another qualified person and be kept readily available. Dated maintenance records should be kept where readily available to appointed personnel.

b. Replacement parts shall be at least equal to the original manufacturer's specifications.

c. All moving parts of the crane for which lubrication is specified shall be regularly lubricated. Lubricating systems should be checked for proper delivery of lubricant. Operators and maintenance personnel shall follow the manufacturer's recommendations as to the points and frequency of lubrication, maintenance of lubricant levels, and types of lubricant to be used.

9.4.2 MAINTENANCE PROCEDURES

a. Before starting adjustments or repairs on a crane, maintenance personnel shall take the following precautions as applicable:

    1. Place the crane where it will cause the least interference with other equipment or operations in the area.

    2. Lower the lower load block to the ground or otherwise secure it against dropping.

    3. Lower the boom to the ground, if possible, or otherwise secure it against dropping.

    4. Place all controls in the OFF position and secure all operating features from inadvertent motion by brakes, pawls, or other means.

    5. Ensure starting means are rendered inoperative.

    6. Stop the power plant or disconnect it at the power takeoff.

    7. Relieve hydraulic oil pressure from all hydraulic circuits before loosening or removing hydraulic components.

b. Warning or out-of-order signs shall be placed on the crane controls. Signs or flags shall be removed only by authorized personnel.

c. After adjustments and repairs have been made, the crane shall not be returned to service until all guards have been reinstalled, trapped air has been removed from the hydraulic system, safety devices are reactivated, and maintenance equipment is removed.

d. For locomotive cranes:

    1. Employ blue flag protection on each side of the crane (except dead ends).

    2. Place derails not less than 50 ft from the crane on each side (except dead ends).

    3. Allow only authorized personnel to remove warning signs, flags, and derails.

9.4.3 WIRE-ROPE MAINTENANCE

Personnel using wire rope shall ensure proper care by doing the following:

a. Store rope to prevent damage or deterioration.

b. Unreel or uncoil rope as recommended by the rope manufacturer and with care to avoid kinking or inducing a twist.

c. Before cutting a rope, use some method to prevent unlaying the strands. Heat-affected zones of flame cut wire rope shall not be allowed to bear load.

d. During installation, avoid dragging the rope in the dirt or around objects which will scrape, nick, crush, or induce sharp bends in it.

9.4 MAINTENANCE

e. Maintain rope in a well-lubricated condition to reduce internal friction and to prevent corrosion. Ensure that lubricant applied as part of a maintenance program is compatible with the original lubricant. Consult the rope manufacturer when in doubt. Lubricant applied shall be of the type that does not hinder visual inspection. Those sections or rope that operate over sheaves or are otherwise hidden during inspection and maintenance procedures require special attention when the rope is lubricated.

f. When an operating rope shows greater wear at its ends than on the remainder, its life can be extended (in cases where a reduced rope length is adequate) by cutting off the worn end, thus shifting the wear to different areas of the rope.

9.5 OPERATIONS

a. The following shall apply to all personnel involved in mobile crane operation.

b. At the initial stage of the planning process, an appointed person shall classify each lift into one of the DOE-specified lift categories (ordinary, critical, or preengineered production).

9.5.1 CONDUCT OF OPERATOR

a. Cranes shall only be operated by personnel qualified per Chapter 6 of this Standard for the type of crane being operated..

b. Do not engage in any practice that will divert your attention while operating the crane.

c. Keep the operating area free of water, snow, ice, oil, and debris that could cause your hands or feet to slip from the controls.

d. Keep the operating cab windshields clean and free of anything that obstructs vision. Replace broken windows.

e. Ensure proper functioning of tires, horn, lights, battery, controller, lift system (including load-engaging means, chains, hoist rope, and limit switches), brakes, and steering mechanisms. If at any time a lifting device is found to be in need of repair, is defective, or is in any way unsafe, report it immediately to the designated authority and take the unit out of service until it has been restored to safe-operating condition or a determination has been made by the responsible manager that the deficiency will not adversely affect the safe operation of the unit.

f. When two or more cranes are used to lift one load, one designated person shall be responsible for the operation. That person shall analyze the operation and instruct all personnel involved in the proper positioning, rigging of the load, and the movements to be made. That person shall also determine the necessity to reduce crane ratings, position of load, boom location, ground support, and speed of movement.

g. Determine that no one is working on the crane or is close to it before starting the engine or beginning to operate the crane.

h. Barricade accessible areas within the swing radius of the rear of the rotating superstructure of the crane to prevent anyone from being struck or crushed by the crane.

i. Do not hoist two or more separately rigged loads in one lift, even though the combined load is within the crane's rated capacity. Refer to Section 15.5.8 for the exception granted for steel erection in construction.

j. When fueling the crane, stop the engine(s) and ensure that smoking or open flames are not permitted within 25 ft of the fueling area.

k. Ensure that a 10BC or larger fire extinguisher is installed at all operator stations. Fire extinguishers shall be maintained in a serviceable condition.

l. Do not store gasoline, acids, caustics, or cleaning solvents that emit toxic fumes in operating cabs. Store fuel in safety cans in safe locations.

m. Ensure that alternate egress routes are not locked on mobile units with operating enclosures.

n. Position the crane on a solid and level footing. It may be necessary in certain situations to use heavy timber mats to build a good working foundation.

o. When swinging the crane, watch out for centrifugal force. Swing the crane slowly to avoid an outward swing of the load. Attach a tag-line to the load if necessary to control the swing.

p. Watch for boom kickback. Never operate with the boom at a higher angle than shown on the capacity charts.

q. Use extreme caution when operating the crane near workers in elevated areas.

r. Use power lowering when lowering loads. When lowering heavy loads, keep the hoist brake as reserve. Use a safety pawl on the boom-hoist drum when not lowering.

s. Avoid two-blocking, caused when the hook block makes contact with boom-point sheaves. A continuing pull on the hoist lines can break the rope or pull the boom back over the cab on some types of booms. On hydraulically telescoping booms, be sure to play out the hoist line when extending and spool in the hoist line when retracting.

t. Lock carrier air brakes ON when operating, and check the pressure of the air brakes frequently.

u. Watch out for the carrier-cab on truck-mounted units when swinging the boom. Keep boom high enough to swing clear of cab.

v. In the absence of crane manufacturer's instructions regarding maximum wind speeds for operation, operations undertaken at wind speeds in excess of 25 mph should be evaluated by a qualified person to determine if the size, shape and weight of the load can be safely lifted.

w. When a crane is to be operated at a fixed radius, the boom-hoist pawl or other positive locking device shall be engaged.

x. On truck-mounted cranes, no loads shall be lifted over the front area, except as approved by the crane manufacturer.

y. Crane cabs, necessary clothing and personal belongings shall not interfere with access or operations.

z. Tools, oil cans, waste, extra fuses, and other necessary articles shall be stored in the tool box, and shall not be permitted to lie loose in or about the cab.

9.5.1.1 Traveling the Machine

When traveling the machine:

a. Secure the boom and book block.

b. Check bridges before crossing; make sure they will support the weight of the machine.

c. Check river depths before fording.

d. Check clearances under overpasses, overhead lines, or any overhead obstruction; when side clearances are tight, install a barrier or post a lookout, and make certain there is sufficient clearance for tail swing.

e. When traveling with a load, snub the load to prevent swaying if possible; never travel with near-capacity loads.

f. Never travel a rubber-tired unit with a load over the side.

g. On soft surfaces, always move with the load behind; it helps to raise the leading end of the crawlers, and makes traveling safer.

h. Always set swing brakes when the unit is idle or holding loads for a period of time, especially on slopes; if swinging during travel is necessary, engage swing-jaw clutch before releasing brakes.

i. Never back up until it is determined that everyone is clear of the machine.

j. Position the boom in the direction of travel for long moves.

k. Block treads when moving uphill; be sure they are blocked to prevent downhill movement before shifting steering clutches.

l. Lock the turntable before traveling on a highway. Use a house lock or swing brake, and lower boom into the rack to prevent swing.

m. When loading machine on the trailer, always use a ramp; if a ramp is not available use blocking to build one.

9.5.1.2 Making Adjustments or Repairs

a. When making adjustments or repairs:

1. Stop the machine.

2. Lower the boom or secure it against dropping.

3. Neutralize all controls.

4. Lock starter and remove ignition key to make the machine inoperative.

5. Display proper warning signs on controls of machine.

6. Keep hands, feet, and clothing away from gears, ropes, drums, and sheaves.

7. Never put hands on wire rope when climbing to the top of the cab.

8. Use a bar or stick to guide wire rope onto drums.

9. Keep hands well away from the fan drive while engine is running.

10. Safeguard the crane oiler; do not resume operation until a positive ALL CLEAR signal has been given.

11. Replace all guards and shields before resuming operation.

b. Place blocking or other adequate supports under the boom before beginning boom disassembly operations. Never stand under or on the boom during this work.

c. Before disconnecting oil lines, if machine has hydraulic controls, be sure to place boom on the ground or in the boom rest; then move the pedals and control levers to equalize pressures within the cylinders. Always release any air supercharge on the hydraulic reservoir and shut off the engine (or declutch pumps) before disconnecting oil lines.

d. Do not reach into hydraulic-boom holes unless the sections are securely anchored together.

9.5.1.3 Ensuring Stability

a. Know the rated capacity of the crane and the weight of the load. A safe lift depends on many factors including boom length, boom angle, and load radius. Follow these requirements to avoid buckling the boom or tipping:

1. Know the radius of the load; the radius is measured from center of rotation, not from the boom foot pin.

2. Always operate within the rated capacity of the machine.

3. The gross capacity includes weight of hook, block, and any material-handling devices, (i.e., slings, concrete bucket, magnet lifter, etc.); subtract the weight of all these to find the true weight (net capacity) the crane can handle safely.

4. Ratings are based on operating the machine on firm, level ground; outriggers should be properly extended and lowered before operation.

5. Avoid fast swings, hoists, or sudden braking; these can cause overloads.

6. Do not handle large, heavy loads in strong winds; the wind can catch the load and create an unstable condition.

b. Test stability before lifting heavy loads. Check outrigger footing. Lift load slightly off the ground and stop. Check the machine for movement ad check to be sure the brakes hold with the load elevated.

c. Never use machine stability to determine capacity.

d. If there are any indications of tipping, the machine is already overloaded for that working radius.

e. Do not back crane away from the load while carrying a maximum load; this may cause the crane to tip.

f. Always use outriggers when making lifts (with pick-and-carry units), and never lift a load forward of the front outriggers, unless allowed on manufacturer's load chart.

g. Lower outrigger jacks until the tires clear the ground, and level the unit to reach the machine's full capacity. Recheck and, if necessary, reset outriggers between heavy lifts.

h. Always fully extend outrigger beams unless otherwise specified on the manufacturer's load charts for the crane.

9.5.1.4 Further Safety Considerations

a Make only vertical lifts; never pull the load sideways.

b Keep speed slow in lifting and lowering loads.

c Swing carefully and slowly, and avoid boom or jib "whipping"; check counterbalance clearance.

d Do not let the load strike the boom or outriggers.

e Allow maximum clearance between the hook block and boom-point sheaves.

f Keep near-capacity loads as close to the ground as possible.

g Avoid hitting anything with the boom; an engineering analysis shall be made before putting the crane back in service if this occurs.

9.5.2 OPERATING NEAR POWER LINES AND TRANSMITTER TOWERS

It is recognized that operating mobile cranes where they can become electrified from electric power lines is an extremely hazardous practice. It is advisable to perform the work so there is no possibility of the crane, load line, or load becoming a conductive path, (Figure 9-2).

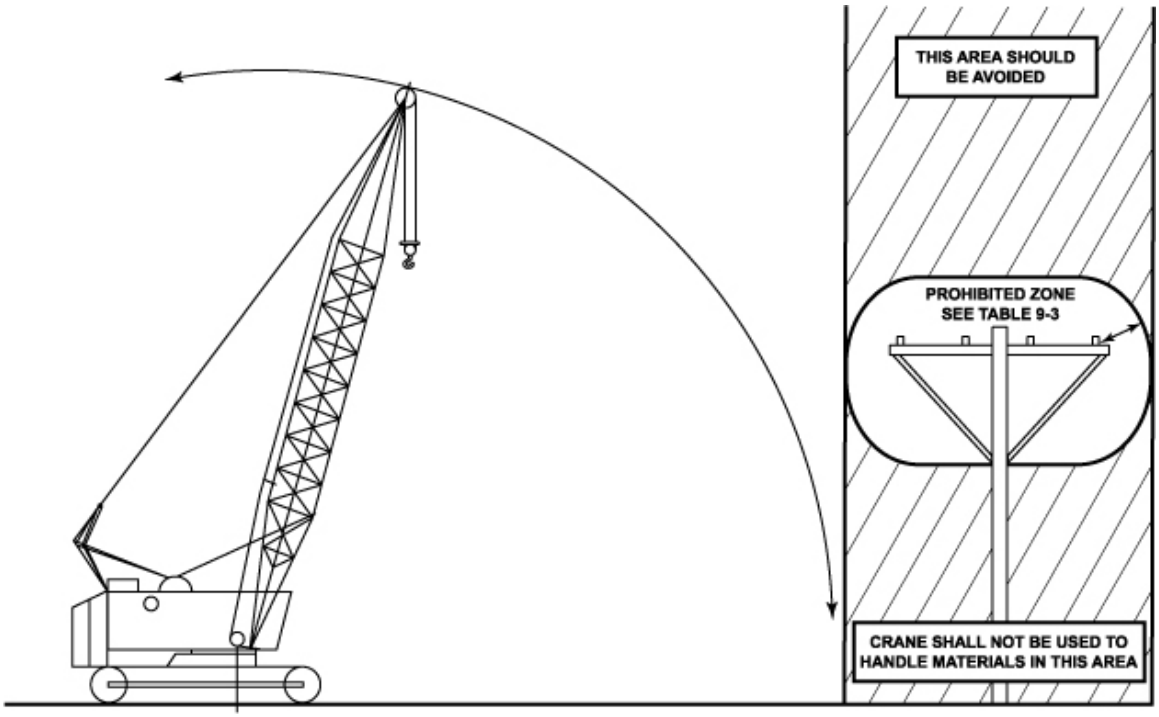

Reprinted from ASME B30.5-2004 by permission of The American Society of Mechanical Engineers. All rights reserved.

Figure 9-2. Danger zone for cranes and lifted loads Operating near electrical transmission line.

The following steps shall be taken to minimize the hazard of electrocution or serious injury as a result of contact between the energized power lines and the crane, load line, or load:

a. The (electric) Power Marketing Administrations in DOE may deviate from the requirements of Table 9-3, providing the work is done according to line management-approved procedures that do not conflict with statutory or approved variances from these regulations.

b. Any overhead wire shall be considered to be an energized line unless and until the person owning the line or the electrical utility authorities indicate that it is not an energized line.

c. Durable signs shall be installed at the operator's station and on the outside of the crane, warning that electrocution or serious bodily injury may occur unless a minimum clearance of 10 ft (3.1m) is maintained between the crane or the load being handled and energized power lines. Greater clearances are required because of higher voltage as stated in Table 9-3. These signs shall be revised, but not removed when a local jurisdiction requires greater clearances.

d. Exercise caution when working near overhead lines having long spans as they tend to move laterally or vertically due to the wind, which could cause them to breach the safety zone.

e. Cranes shall not be used to handle materials stored under electric power lines unless any combination of the boom, load, load line, or machine component cannot enter the prohibited zone.

f. Crane operators shall not rely on the coverings of wires for their protection.

9.5.2.1 Crane Operation Near De-energized and Grounded Electric Power Lines

This is the preferred condition under which the operation can be performed safely. The hazard of injury or death due to electrocution has been removed. The following steps shall be taken to assure de-energization of the power lines has occurred:

a. The power company or owner of the power lines shall de-energize the lines.

b. The lines shall be visibly grounded to avoid electrical feedback and appropriately marked at the job-site location.

c. A qualified representative of the owner of the lines or a designated representative of the electrical utility shall be on site to verify that steps (a) and (b) have been completed and that the lines are not energized.

9.5.2.2 Power Lines Energized, Crane Operating Less than Erected/Fully Extended Boom Length away from the Prohibited Zone (see Figure 9-3)

a. An on-site meeting between project management and a qualified representative of the owner of the lines or a designated representative of the electrical utility shall take place to establish the procedures to safely complete the operations.

b. The specified clearance between the power lines and the crane, load line, and load shall be maintained at all times as specified in Table 9-3.

c. Load control, when required, shall utilize tag lines of a non-conductive type.

d. A designated signaler, whose sole responsibility is to verify that the required clearance is maintained, shall be in constant contact with the crane operator.

e. No one shall be permitted to touch the crane or the load unless the designated signaler indicates it is safe to do so.

f. Operation of boom and load over electric power lines is extremely dangerous, due to perception of distance and multiple contact points as viewed from the position of the operator and/or position of the designated signaler. The operator should avoid operating the crane, with or without a load, in this area.

g. The horizontal and vertical distance of movement of long span lines due to the wind shall be added to the minimum clearance

distance as specified in Table 9-3. A qualified representative of the owner of the lines or a designated representative of the electrical utility shall be consulted for specific distances.

h. Devices such as ribbons, balls, etc., should be attached by a qualified person to the power lines to improve visibility, or equivalent means employed to aid in location of the prohibited zone.

Table 9-3. Safe working distance from power lines.

a. When operating near high-voltage power lines:				
Normal voltage (phase to phase)				**Minimum required clearance**
Up		to	50 kV	10 ft (3.1 m)
Over	50	to	200 kV	15 ft (4.6 m)
Over	200	to	350 kV	20 ft (6.1 m)
Over	350	to	500 kV	25 ft (7.6 m)
Over	500	to	750 kV	35 ft (10.7 m)
Over	750	to	1000 kV	45 ft (13.7m)

b. While in transit with no load and boom or mast lowered:				
Normal voltage (phase to phase)				**Minimum required clearance**
Up		to	0.75 kV	4 ft (1.2 m)
Over	0.75	to	50 kV	6 ft (1.8 m)
Over	50	to	345 kV	10 ft (3.1 m)
Over	345	to	750 kV	16 ft (4.9 m)
Over	750	to	1000 kV	20 ft (6.1 m)

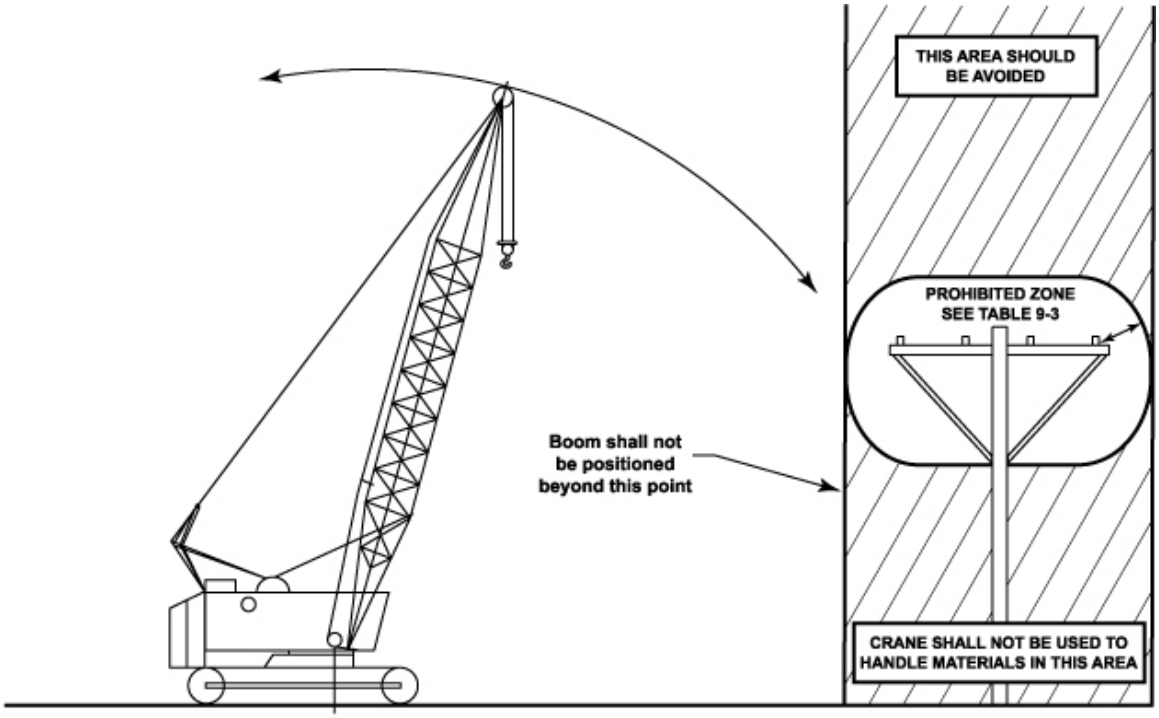

Reprinted from ASME B30.5-2004 by permission of The American Society of Mechanical Engineers. All rights reserved.

Figure 9-3. Danger zone for cranes and lifted loads Operating near electrical transmission line.

9.5.2.3 Crane Operations are Within the Prohibited Zone and the Power Lines are Energized

a. Before such operations take place, a qualified person together with a qualified representative of the utility or an engineer qualified in power line transmission shall after visiting the site, determine if this is the most feasible way to complete the operation, and set minimum required clearances and procedures for safe operations. These operations shall be under their supervision.

The following guidelines should be required:

1. Crane/load grounded to a neutral line by the utility.

2. Electrical system protective devices that automatically re-energize the circuit after a power line contact occurrence should be blocked or disengaged to inhibit this function.

3. Insulated barriers, which are not a part of nor an attachment to the crane and which will not allow contact between the energized electric power lines and the crane, load lines, or load.

4. Non-conductive barricades to restrict access to the crane work area.

b. Load control, when required, shall utilize tag lines of a non-conductive type.

c. A designated signaler, whose sole responsibility is to verify that the clearances established are maintained, shall be in constant contact with the crane operator.

d. The person responsible for the operation shall alert and warn the crane operator and all persons working around or near the crane about hazard of electrocution or serious injury and instruct them on how to avoid the hazard.

e. All non-essential personnel shall be removed from the crane work area.

f. No one shall be permitted to touch the crane or the load unless the signaler indicates it is safe to do so.

9.5.2.4 Crane in Transit With No Load and Boom Lowered (see Figure 9-4)

a. Cranes in transit with no load and boom lowered shall maintain clearance as specified in Table 9-3.

b. A designated signaler shall be assigned to observe the clearance and give warning before the crane approaches the above limits.

c. When planning transit of the crane, the effect of speed and terrain on the boom and crane movement shall be considered.

9.5.2.5 Crane Operation Near Transmitter Towers (see Figure 9-5)

a. Prior to work near transmitter towers where an electrical charge can be induced in the equipment or materials being handled, the transmitter shall be deenergized or tests shall be made to determine if electrical charge is induced on the crane. The following precautions shall be taken when necessary to dissipate induced voltages:

1. The equipment shall be provided with an electrical ground directly to the upper rotating structure supporting the boom.

2. Ground jumper cables shall be attached to materials being handled by boom equipment when electrical charge is induced while working near energized transmitters; crews shall be provided with nonconductive poles having large alligator clips or other similar protection to attach the ground cable to the load.

3. Combustible and Flammable materials shall be removed from the immediate area prior to operations.

9.5.3 HOIST-LIMIT SWITCH

Check all limit switches, if supplied, without a load on the hook at the beginning of each work shift or the first time the crane is used that shift. Inch each motion into its limit switch to ensure that two-blocking does not occur during the test. If a lift is in progress during a shift change, this testing requirement is considered to have been

satisfied for the completion of that lift. However, test the limit switch again before the next lift.

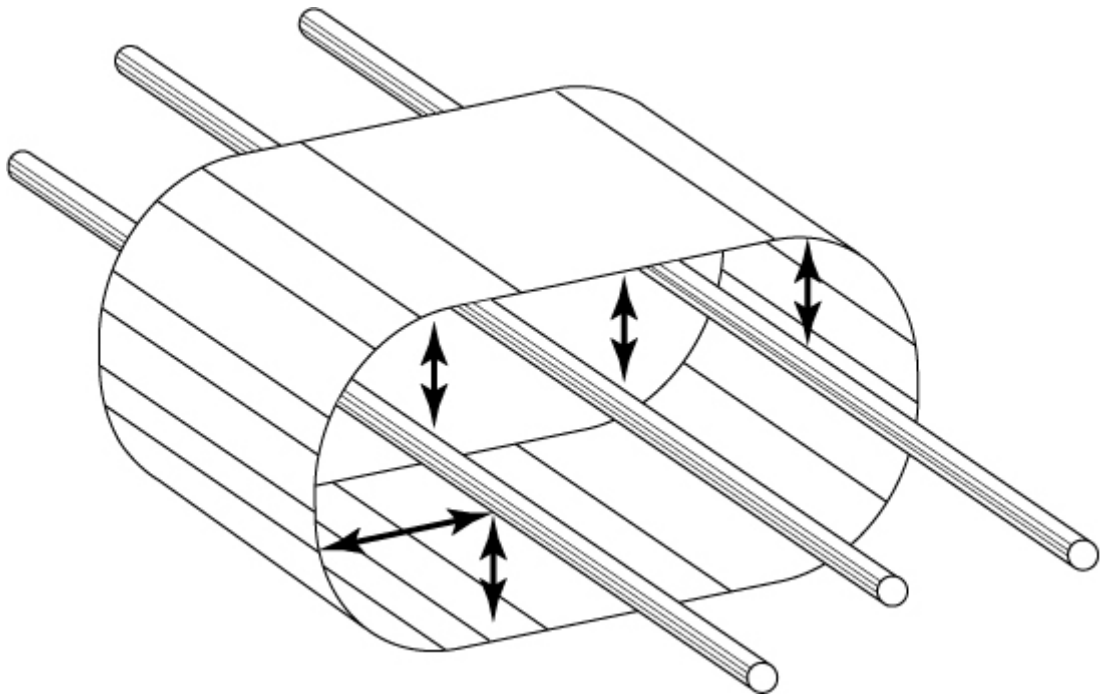

Reprinted from ASME B30.5-2004 by permission of The American Society of Mechanical Engineers. All rights reserved.

Figure 9-4. Danger zone for cranes and lifted loads Operating near electrical transmission line.

(See Table 9-3 for minimum radial distance of prohibited zone.)

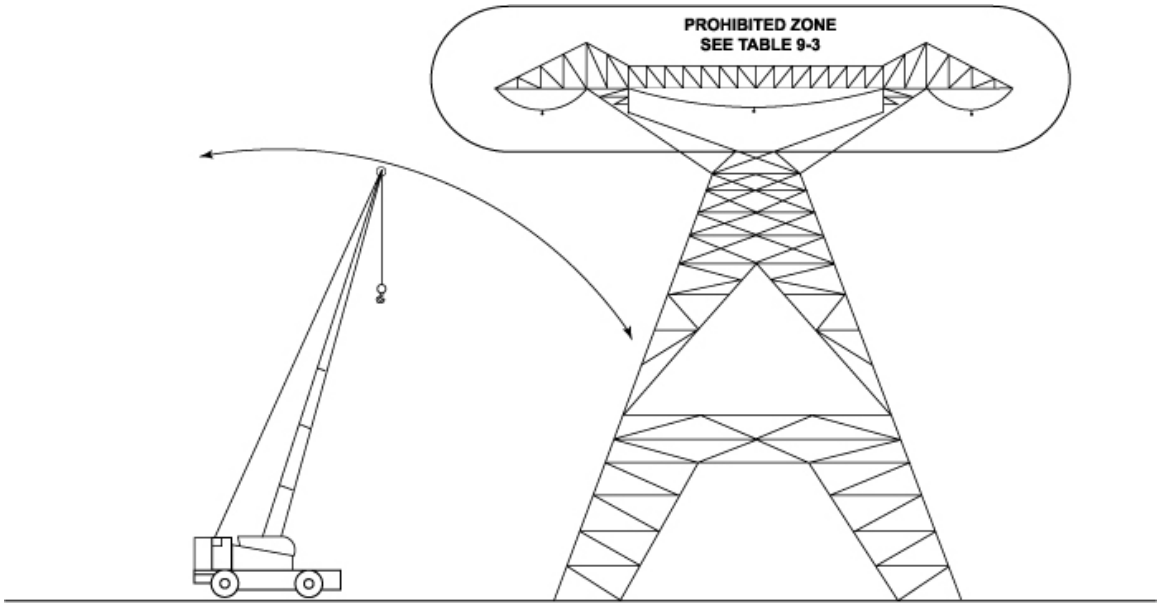

Reprinted from ASME B30.5-2004 by permission of The American Society of Mechanical Engineers. All rights reserved.

Figure 9-5. Danger zone for cranes and lifted loads operating near electrical transmission line.

9.5.4 STANDARD HAND SIGNALS

The standard hand signals for DOE use shall be as specified in the latest edition of the ASME B30 standards for the particular type of crane or hoist being used (see Figure 9-6).

9.5.5 IDENTIFICATION OF SIGNALERS

a. All personnel acting as signalers during crane operations shall be clearly identified to the crane operator. Options for improving signaler visibility include using an orange hardhat, orange gloves or an orange vest.

b. In those cases where the crane operator cannot see the signaler, a second person (relay signaler) shall be stationed where he or she can see both the signaler and the crane operator, and can relay the signals to the operator. The relay signaler shall also be clearly identified to the crane operator.

c. The operator shall obey signals only from the designated signaler. *Obey a STOP signal no matter who gives it*.

9.5.6 STANDARD VOICE SIGNALS

a. Prior to beginning lift operations using voice signals, the signals shall be discussed and agreed upon between the person-in-charge, the crane operator, the appointed signal person and the riggers.

b. Radios or equivalent shall be tested before lifting operations begin.

c. Prior to commencing a lift, the crane operator and the signal person shall contact and identify each other.

d. All directions given to the crane operator by the signal person shall be given from the crane operator's direction perspective (e.g., right swing).

e. Each series of voice signals shall contain three elements stated in the following order:

   1. Function and direction

   2. Distance and/or speed

   3. Function stop

9.5.7 SPECIAL SIGNALS

For operations or crane attachments not covered by standard hand, voice or audible signals, additions to or modifications of the standard signal procedures may be required. In all such cases, the required special signals shall be agreed upon in advance by the manager, person-in-charge, crane operator, signal person and riggers. These special signals shall not be in conflict with the standard signals.

9.5.8 SIZE OF LOAD

The crane shall not be loaded beyond its rated capacity, except of authorized testing described in Section 9.3.

9.5.9 ATTACHING THE LOAD

a. Ensure that the hoist rope is free from kinks or twists. Do not wrap the hoist rope around the load.

b. Ensure that the load is attached to the load-block hook by means of slings or other approved devices.

c. Ensure the load is well secured and properly balanced in the sling or lifting device before it is lifted more than a few inches.

d. Take care to make certain that the sling clears all obstacles.

9.5.10 MOVING THE LOAD

a. The appointed person directing the lift shall make certain that the load is well secured and properly balanced in the sling or lifting device before it is lifted more than a few inches.

b. Before starting to hoist, not the following conditions:

   1. Hoist rope shall not be kinked.

   2. Multiple-part lines shall not be twisted around each other.

HOIST. With forearm vertical, forefinger pointing up, move hand in small horizontal circles.	LOWER. With arm extended downward, forefinger pointing down, move hand in small horizontal circles.	USE MAIN HOIST. Tap fist on head, then use regular signals.
USE WHIPLINE. (Auxiliary Hoist) Tap elbow with one hand, then use regular signals.	RAISE BOOM. Extend arm, fingers closed, thumb pointing upward.	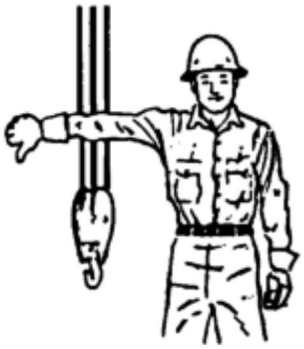 LOWER BOOM. Extend arm, fingers closed, thumb pointing downward.

Reprinted from ASME B30.5-2004 by permission of The American Society of Mechanical Engineers. All rights reserved.

Figure 9-6. Standard hand signals for controlling mobile crane operation.

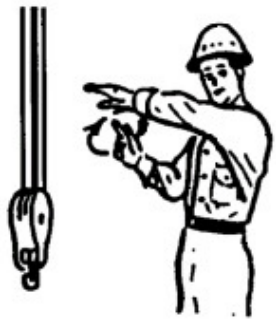 MOVE SLOWLY. Use one hand to give any motion signal and place other hand motionless above the hand giving the motion signal. (Hoist slowly shown as example.)	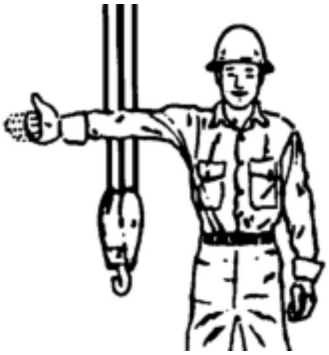 RAISE THE BOOM AND LOWER THE LOAD. With arm extended, thumb pointing up, flex fingers in and out as lone as load movement is desired.	LOWER THE BOOM AND RAISE THE LOAD. With arm extended, thumb pointing down, flex fingers in and out as long as load movement is desired.
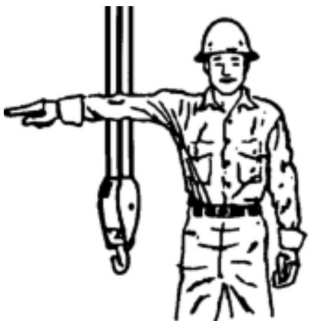 SWING. Extend arm, point with finger in direction of swing of boom.	STOP. Extend arm, palm down; move arm back and forth horizontally.	EMERGENCY STOP. Both arms extended, palms down, move arms back and forth horizontally.
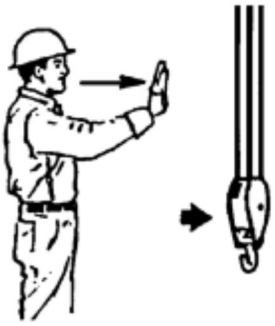 TRAVEL. Extend arm forward, hand open and slightly raised; make pushing motion in direction of travel.	DOG EVERYTHING. Clasp hands in front of body.	TRAVEL (Both Tracks). Use both fists in front of body, making a circular motion about each other, indicating direction of travel, forward or backward (for land cranes only).

Reprinted from ASME B30.5-2004 by permission of The American Society of Mechanical Engineers. All rights reserved.

Figure 9-6. (continued).

TRAVEL. (One Side Track). Lock the track on side indicated by raised fist. Travel opposite track indicated by circular motion of other fist, rotated vertically in front of body (for land cranes only).	EXTEND BOOM. (Telescoping Booms). Hold both fists in front of body, thumbs pointing outward.	RETRACT BOOM (Telescoping Booms). Hold both fists in front of body, thumbs pointing toward each other.
EXTEND BOOM (Telescoping Boom). One-hand signal. Hold one fist in front of chest, thumb tapping chest.	RETRACT BOOM (Telescoping Boom). One-hand signal. Hold one fist in front of chest, thumb pointing outward and heel of fist tapping chest.	

Reprinted from ASME B30.5-2004 by permission of The American Society of Mechanical Engineers. All rights reserved.

Figure 9-6. (continued).

3. The hook shall be positioned above the center of gravity of the load in such a manner as to minimize swinging when the load is lifted.

4. Following any slack-rope condition, it should be determined that the rope is properly seated on the drum and in the sheaves.

5. All personnel including the qualified rigger shall be clear of the load.

c. During hoisting, take care to ensure that:

1. There is no sudden acceleration or deceleration of the moving load.

2. Load does not contact any obstructions. A "dry run" shall be conducted in areas where clearance is limited.

d. Cranes shall not be used for side pulls, except when specifically authorized by a designated person who has determined that the stability of the crane is not endangered and that various parts of the crane will not be over stressed.

e. Avoid carrying loads over people.

f. No hoisting, lowering, swinging, or traveling shall be done while anyone is on the load hook, except as noted in Chapter 4, "Lifting Personnel."

g. Test the brakes each time a load approaching the rated capacity is handled by raising the load a few inches and applying the brakes.

h. Do not lower the load below the point where less than two full wraps of rope remain on the hoist drum.

i. Do not leave your position at the controls while the load is suspended, unless required to do so by an approved emergency procedure.

j. If the load must remain suspended for any considerable length of time, the operator shall hold the drum from rotating in the lowering direction by activating the positive controllable means of the operator's station.

k. Work on suspended loads is prohibited under normal conditions. When the responsible manager decides that it is necessary to work on a suspended load, guidelines for ensuring safety of the work shall be established through consultation with the appropriate safety organization. Suspended loads that must be worked on shall be secured against unwanted movement.

l. Tag lines should be used as required to guide, snub, or otherwise control the load.

9.5.11 ORDINARY LIFTS

a. The requirements of all preceding paragraphs in Section 9.5, "Operation," also shall apply to ordinary lifts.

b. An appointed person shall classify each lift into one of the DOE categories (ordinary, critical or preengineered production) before the lift is planned.

c. Hoisting and rigging operations for ordinary lifts require a designated leader who shall be present at the lift site during the entire lifting operation. If the lift is being made by only one person, that person assumes all responsibilities of the designated leader.

d. Leadership designation may be by written instructions, specific verbal instructions for the particular job, or clearly defined responsibilities within the crew's organizational structure.

e. The designated leader's responsibility shall include the following:

1. Ensure that personnel involved understand how the lift is to be made.

2. Ensure that the weight of the load is determined, that proper equipment and accessories are selected, and that rated capacity is not exceeded.

3. Survey the lift site for hazardous/unsafe conditions.

4. Ensure that equipment is properly set up and positioned.

5. Ensure that a signaler is assigned, if required, and is identified to the operator.

6. Direct the lifting operation to ensure that the lift is completed safely and efficiently.

7. Stop the job when any potentially unsafe condition is recognized.

8. Direct operations if an accident or injury occurs.

f. The designated leader shall inspect all cranes to ensure that they are still within the inspection interval.

g. The designated leader shall inspect all lifting devices to ensure that the rated capacity of these items of equipment will not be exceeded.

h. The operator shall inspect for damage and defects in accordance with Section 9.2.3, including observations during operation. A qualified person shall examine deficiencies and determine whether they constitute a hazard.

i. Check hoist-limit switches, if provided, according to Section 9.5.3, "Hoist-Limit Switch."

j. Ensure that basic operating instructions of power-operated equipment, together with charts, tables, or diagrams showing the rated capacity, boom angle, swing, and stability data are posted in convenient view of the operator.

k. Check load lines after strain is put on them but before the load is lifted clear of the ground; if load lines are not plumb, reposition the slings or equipment so that the lines are plumb before continuing.

9.5.12 CRITICAL LIFTS

See Chapter 2, "Critical Lifts," for critical-lift requirements.

Exhibit I is intended to be a sample form only.
The equipment manufacturer's inspection/testing
criteria supercede any other criteria.
In cases where the equipment manufacturer does not include
inspection/testing criteria, other forms developed to facilitate
required inspection/testing are acceptable.

INTENTIONALLY BLANK

EXHIBIT I
(SAMPLE FORM)

MOBILE CRANE LOAD TEST

LICENSE OR EQUIPMENT NO. _____ MAKE _____ DATE _____

HOUR METER-ODOMETER TOTAL _____ RATED CAPACITY _____

LOAD TEST INSPECTION REPORT

The following checklist identifies the items to be inspected prior to the load test. Any unusual conditions observed during the inspection should be noted in the Remarks section. Equipment shall be inspected by maintenance personnel prior to load test.

NOTES: 1. Qualified inspector shall verify the inspection is completed.
2. Craftsmen shall initial and date all tests, work, and inspections completed below.

NO.	CRANE ITEM	DEFECT	OK	NA	NO.	CRANE ITEM	DEFECT	OK	NA
1	Wire Rope				13	Hoist Clutch Lining			
2	Cracked or Worn Sheaves & Drums				14	Hoist Drum Brake Bands			
3	Limit Switch (Anti-Two-Blocking				15	Open Gears			
4	Boom				16	Boom Jibs (Where Applicable)			
5	Master Clutch				NO.	CARRIER ITEM	DEFECT	OK	NA
6	Steering Clutches				1	Steering Gears and Connections			
7	Hydraulic Pump				2	Brakes (Service and Hand)			
8	Hydraulic Controls				3	Tires and Wheels			
9	Hydraulic Hoses				4	General Lubrication			
10	Mechanical Controls					OPERATING TEST			
11	Drive Chains					OVERALL CONDITION			
12	Swing Clutches								

REMARKS (Unusual conditions – noises, structural cracks, misalignment, etc.)

_____

_____

SAFETY ITEMS: (Fire extinguisher, signs, guards, etc.)

EXHIBIT I (continued)
(SAMPLE FORM)

MOBILE CRANE LOAD TEST AND FOLLOW-UP CHECKS

NOTES: 1. Craftsman shall initial all steps completed below.
2. Qualified inspector shall verify all steps below.

_____ 1. Set crane up for load test and inspection.

_____ 2. Perform operations test without load to verify proper function of the following:

- Load lifting and lowering mechanisms
- Boom lifting and lowering mechanism
- Boom extension and retraction mechanisms
- Swinging mechanism
- Travel mechanism
- Safety devices.

_____ 3. Test loads shall not exceed 110% of rated capacity. Refer to load chart for load test capacity at maximum and minimum working radius. Check boom angle indicators for accuracy.

_____ 4. Rig test weights to hook using appropriate slings.

_____ 5. Hoist the test load a sufficient distance to ensure that the load is supported by the crane and held by the hoist brakes. Hold the load for 10 min or the time required to check all primary load-bearing parts while under load without slippage, damage, or permanent deformation.

_____ 6. At least once during the lifting portion of the hoisting cycle and once during the lowering cycle, power to the hoisting equipment shall be completely turned off. There shall be no slippage of the load or overheating of the brakes.

_____ 7. Lower the load to approximately 2 in. off the ground to check for swing-roller operation and outrigger stability. Slowly swing test load between outrigger locations.

_____ 8. Move the load back to the original position and slowly lower to ground.

_____ 9. At the completion of the load test, inspect the following:

Visually inspect rope in accordance with Section 9.2.6.

EXHIBIT I (continued)
(SAMPLE FORM)

MOBILE CRANE LOAD TEST AND FOLLOW-UP CHECKS

DEFECTIVE/OK/NA

_____ a. Rope diameter: (Previous) _____ (Present) _____

_____ b. Wear

_____ c. Kinks

_____ d. Broken wires

_____ e. Other signs of deterioration.

Visually inspect the rope drum for:

_____ a. Wear

_____ b. Deformation

_____ c. Deterioration

_____ d. Have qualified inspector perform nondestructive tests on hook by visual examination, liquid penetrant examination, or magnetic-particle examination. Acceptance: No cracks, linear indications, laps, or seams.

Hooks with more than 5% normal (new hook) throat opening not to exceed 1⁄4 in. (or as recommended by the manufacturer) shall be replaced. Hooks with any visibly apparent bend or twist from the plane of the unbent hook (new hook) shall be replaced. Hooks having more than 10% wear in the bowl section or 5% elongation of the shank shall be replaced. Lubricate hook bearing and latch pin, as applicable.

Establish three marks; A, B, and C, with a center punch. For ease in measuring, set distances on an even number of inches.

BEFORE LOAD TEST

Length AB _____ in.

Length BC _____ in.

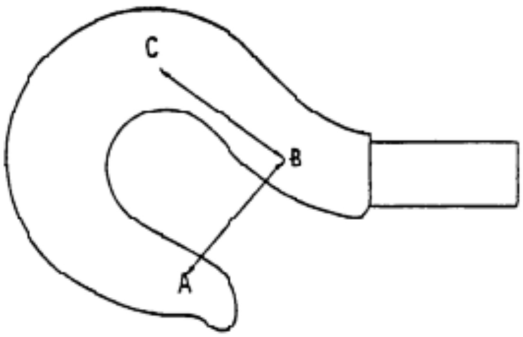

AFTER LOAD TEST

Length AB _____ in.

Length BC _____ in.

Check for:

1. Wear and deformation
2. Cracks and twisting
3. Signs of opening between Point A and Point B

EXHIBIT I (continued)

(SAMPLE FORM)

MOBILE CRANE LOAD TEST LOAD AND FOLLOW-UP CHECKS

This information should be retained with the equipment.

Record the following:

BLOCK WEIGHT _____ lb.

TEST WEIGHT _____ lb.

RADIUS/CENTER PIN TO LOAD _____ ft.

PARTS LINE _____ quantity

BOOM LENGTH _____ ft.

Load Test Inspection Date _____

Qualified Inspector _____

Operated By _____

EXHIBIT II
(SAMPLE FORM)

MOBILE CRANE PRE-OPERATIONAL CHECKLIST
(Records Are Not Required)

STATUS CODE: SAT – Satisfactory **UNSAT** – Unsatisfactory **R** – Repaired **N/A** – Not Applicable

EXTERNAL	CODE	COMMENT
Check Fuel Cap		
Crankcase Oil Level		
Cold Weather Starting Aid		
Radiator		
Antifreeze & Coolant		
Cleaners		
Fan Belts		
Pumps & Motors		
Battery		
Muffler		
Brake & Air System (Bleed)		
Hydraulic Reservoir		
Hydraulic Oil Filter		
All Hydraulic Hoses & Fittings		
Auto Transmission Oil Level		
Air Compressor Oil Level		
Outriggers & Boxes		
Outriggers Float Pads		
Tire Condition & Pressure		
Wheel Lugs		
Hoists		
Boom Attachments		
Lubrication/Grease or Oil Leaks		
All Sheaves Lubed		

EXHIBIT II (continued)
(SAMPLE FORM)

MOBILE CRANE PRE-OPERATIONAL CHECKLIST
(Records Are Not Required)

EXTERNAL	CODE	COMMENT
Wire Rope Kinks or Breaks		
Wire Rope Dirt & Lube		
Hook & Hook Block		
Counterweight & Torque		
Handrails		
Lamps:		
• Turn Signals		
• Flashers		
• Headlamps		
• Cab		
• Boom		
• Backup		
Welds & Cracks:		
• Hoists		
• Boom		
• Sheaves		
• Sheaves		
• Hook		
• Block		
• Motor		
• Valves		
• Cylinders		
REMARKS		

EXHIBIT II (continued)
(SAMPLE FORM)

MOBILE CRANE PRE-OPERATIONAL CHECKLIST
(Records Are Not Required)

INSIDE CAB	CODE	COMMENT
Fire Extinguisher Pressure		
Operator Manual & Load Chart		
Hand Signal Chart		
Glass		
Windshield Wiper		
GAUGES: Oil, Fuel, Amp		
Lights & Horn		
Backup Alarm		
Heater		
Boom Angle Indicator (PAT)		
Load Moment Indicator		
Anti Two Block		
Boom Stops		
Gearshift Control		
Foot & Parking Brakes		
Swing Brake		
Control Lever Linkage		
Throttle Linkage		
Engine RPM		
REMARKS		

INTENTIONALLY BLANK

EXHIBIT III
(SAMPLE FORM)

MOBILE CRANE FREQUENT INSPECTION REPORT

MODEL #: _____ SERIAL #: _____ HOUR METER: _____

STATUS CODE: SAT – Satisfactory **UNSAT** – Unsatisfactory **R** – Repaired **N/A** – Not Applicable

FREQUENT	CODE	COMMENT
Check Bolt Torque:		
• Transmission Mount		
• Turntable		
• Engine Mount		
• Hoist Mount		
• Axle Mount		
Engine RPM		
Muffler Connections		
Wiring harness		
Battery Cable		
Battery Water Level		
Master Cylinders		
Pump Drive Gearbox		
Swing Gearbox		
Axle Lockout		
Axle Differential		
Axle Planetary Oil		
Welds & Cracks		
• Hoist		
• Boom		
• Sheaves		
• Hook		
• Block		

EXHIBIT III (continued)

(SAMPLE FORM)

MOBILE CRANE FREQUENT INSPECTION REPORT

FREQUENT	CODE	COMMENT
• Motor		
• Valves		
• Cylinders		
Lamps:		
• Turn Signals		
• Headlamps		
• Cab		
• Boom		
• Backup		
Boom Sheaves		
Boom Alignment		
Jib Alignment		
Machine Structure		
Clean/Change:		
• Differential Breather		
• Fuel Filter Screen		
• Compressor Strainer		
• Transmission Filter		
Drum		
Wire Rope: Dirt/Lube/Kinks		
Hook & Latch		
Block & Sheaves		
Guards in Position		
Emergency Stop		
Comments: Note Any Potential Hazards or Malfunctions		

EXHIBIT IV
(SAMPLE FORM)

MOBILE CRANE PERIODIC INSPECTION REPORT

MODEL #: _____ SERIAL #: _____ HOUR METER: _____

STATUS CODE: SAT – Satisfactory **UNSAT** – Unsatisfactory **R** – Repaired **N/A** – Not Applicable

PERIODIC	CODE	COMMENT
Check Bolt Torque:		
• Transmission Mount		
• Turntable		
• Engine Mount		
• Gearbox Mount		
• Axle Mount		
Engine RPM		
Muffler Connections		
Wiring harness		
Battery Cable		
Battery Water Level		
Master Cylinders		
Pump Drive Gearbox		
Swing Gearbox		
Axle Lockout		
Axle Differential		
Axle Planetary Oil		
Boom Sheaves		
Boom Alignment		
Jib Alignment		
Machine Structure		
Drum		
Wire Rope Dirt/Lube/Kinks		

EXHIBIT IV (continued)
(SAMPLE FORM)
MOBILE CRANE PERIODIC INSPECTION REPORT

PERIODIC	CODE	COMMENT
Clean/Change		
• Differential Breather		
• Fuel Filter Screen		
• Compressor Strainer		
• Transmission Filter		
Drum		
Wire Rope: Dirt/Lube/Size/Kink		
Hook & Latch		
Block & Sheave		
Guards in Position		
Emergency Stop		
Welds & Cracks:		
• Hoists		
• Boom		
• Sheaves		
• Hook		
• Block		
• Motor		
• Valves		
• Cylinders		
Lamps:		
• Turn Signals		
• Headlamps		
• Flashers		
• Cab		
• Boom		

EXHIBIT IV (continued)
(SAMPLE FORM)
MOBILE CRANE PERIODIC INSPECTION REPORT

PERIODIC	CODE	COMMENT
• Backup		
Paint		
Cracks or Leaks:		
• Swing Gearbox Case		
• Transmission Case		
• Pump Drive Box		
• Engine Intake		
Boom Wear Pads		
Brake Liners		
Axle Planetary Hubs		
Cleaner		
Clutch Release Bearing		
Gear Shift Control		
Steering System Oil		
Crankcase Breather		
Tie Rod Ball Joints		
Steering Knuckles		
Drag Link Ends		
Drag Link U-Joint		
Windshield Wiper		
Lever Indicator		
Emergency Brake		
Gauges: Oil, Fuel, Amp		
CIRCLE ONE: **PASS**	**FAIL**	
INSPECTOR (Print): _____ Signature:_____ Date: _____		

INTENTIONALLY BLANK

CHAPTER 10
FORKLIFT TRUCKS

This chapter specifies operation, inspection, testing, and maintenance requirements for forklift trucks powered by internal-combustion engines or electric motors and implements the requirements of ANSI/ITSDF B56.1 ("Safety Standard for powered Industrial Trucks – Low Lift and High lift Trucks") and ANSI/ITSDF B56.6 ("Rough Terrain Fork Lift Trucks"), and ANSI/UL 558 ("Internal-Combustion-Engine-Powered Industrial Trucks") and ANSI/UL 583 ("Electric-Battery-Powered Industrial Trucks").

10.1 GENERAL 10-1
- 10.1.1 Operator Training/Qualification 10-1
- 10.1.2 Rated Capacity 10-1
- 10.1.3 Nameplates and Markings 10-1
  - 10.1.3.1 Fork Arm Data 10-1
- 10.1.4 Attachments 10-1
- 10.1.5 Modification 10-2
- 10.1.6 Warning Devices 10-2
- 10.1.7 Overhead Guards 10-2
- 10.1.8 Fire Hazards 10-2
- 10.1.9 Work Atmosphere 10-2

10.2 TYPE DESIGNATION AND AREAS OF USE 10-11
- 10.2.1 Type Designation 10-11
  - 10.2.1.1 Non-Hazardous Areas 10-11
  - 10.2.1.2 Hazardous Areas 10-11
- 10.2.2 Specific Areas of Use 10-12

10.3 INSPECTIONS 10-15
- 10.3.1 Daily Pre-Operational Check 10-15
- 10.3.2 Initial Inspection of New and Rented Equipment 10-15
- 10.3.3 Inspection and Maintenance 10-15
- 10.3.4 Forks 10-16
  - 10.3.4.1 Fork Load Ratings 10-16
  - 10.3.4.2 Fork Inspections 10-16
  - 10.3.4.3 Fork Repair 10-17
- 10.3.5 Battery Maintenance 10-17
- 10.3.6 History File 10-18

10.4 TESTING 10-19
- 10.4.1 Forklift Truck Load Test 10-19
- 10.4.2 Fork Load Test 10-19
- 10.4.3 Attachment Load Test 10-19

10.5 OPERATIONS 10-20
- 10.5.1 Conduct of Operator 10-20
  - 10.5.1.1 General 10-20
  - 10.5.1.2 Traveling 10-21
  - 10.5.1.3 Loading 10-22
- 10.5.2 Lifting of Personnel 10-23
- 10.5.3 Standard Hand Signals 10-25
- 10.5.4 Ordinary Lifts 10-25
- 10.5.5 Critical Lifts 10-25
- 10.5.6 Equipment Qualifications 10-25

Exhibit I Operators Pre-Shift Inspection Form 10-30
Exhibit II Forklift Load Test and Inspection Form 10-32

10.1 GENERAL

This chapter specifies operation, inspection, testing, and maintenance requirements for industrial trucks powered by electric motors or internal-combustion engines. See Figures 10-3 for examples of powered industrial trucks.

Guidelines may also be taken from this chapter regarding pallet trucks and other small miscellaneous non-powered lift trucks (see Figure 10-4), but training, operating, maintenance, inspection, and testing requirements for non-powered equipment shall be based on the manufacturer's instructions and recommendations.

10.1.1 OPERATOR TRAINING/ QUALIFICATION

Operators of forklift trucks shall be trained and qualified as described in Chapter 6, "Personnel Qualification and Training."

10.1.2 RATED CAPACITY

Rated capacity is the maximum weight the truck can transport and stack at a specified load center and for a specified load elevation. Trucks shall not be used or tested above their rated capacities.

10.1.3 NAMEPLATE(S) AND MARKINGS

Every truck shall have appended to it a durable, corrosion-resistant nameplate(s), legibly inscribed with the following information:

a. Truck model and truck serial number.

b. Weight of truck.

c. Rated capacity.

d. Designation of compliance with the mandatory requirements of ANSI/ITSDF B56.1, "Safety Standard for Low and High lift Trucks," applicable to the manufacturer.

e. Type designation to show conformance with the requirements, such as those prescribed by Underwriters Laboratories, Inc., and Factory Mutual Research Corporation.

f. Batteries for use in electric trucks shall have the battery weight legible stamped on the battery tray near the lifting means as follows: Service Weight____lb (kg).

In addition to the above requirements, additional information is required (and allowed) on nameplates on high-lift trucks, electric trucks, and trucks intended for hazardous locations (see ANSI/ITSDF B56.1, Section 7.5, "Nameplates and markings").

10.1.3.1 Fork Arm Data

For forklift trucks purchased after December 1984, each fork arm shall be clearly stamped with its rated capacity in an area readily visible and not subject to wear. For example, the designation 1500 @ 24 means 1,500-lb (680-kg) capacity at 24-in. (600-mm) load center.

10.1.4 ATTACHMENTS

Attachments almost always affect rated capacity of the truck. When a forklift truck is equipped with an attachment, the rated capacity of the truck/attachment combination shall be established by the truck manufacturer. In the event the truck manufacturer is nonresponsive, the attachment may be used if written approval is obtained from a qualified Professional Engineer. If the response from the original truck manufacturer is negative, the engineer must perform a safety analysis and address all safety and/or structural issues contained in the manufacturer's disapproval. Capacity, operation, and maintenance instruction plates, tags, or decals shall be changed accordingly.

a. The rated capacity of an attachment/truck combination shall not be exceeded.

b. On every removable attachment (excluding fork extensions), a corrosion-resistant nameplate with the following information is required:

   1. Model number

   2. Serial number on hydraulically actuated attachments

   3. Maximum hydraulic pressure (on hydraulically actuated attachments)

   4. Weight

5. Capacity

6. The following instructions (or equivalent); "Capacity of truck and attachment combination may be less than capacity shown on attachment. Consult truck nameplate."

10.1.5 MODIFICATIONS

a. Modifications or additions that affect capacity or safe operation shall not be performed without prior written approval from the forklift truck manufacturer. Capacity, operation, and maintenance instruction plates, tags, or decals shall be changed accordingly.

b. In the event that the truck manufacturer is no longer in business and there is no successor to the business, the user may arrange for a modification or alteration to a forklift truck, provided however, the user shall:

   1. Arrange for modifications or alteration to be designed, tested, and implemented by an engineer qualified in forklift trucks and their safety;

   2. Maintain a permanent record of the design, test(s), and implementation of the modifications or alteration;

   3. Make appropriate changes to the capacity plate(s), decals, tags, and operation and maintenance manuals;

   4. Affix a permanent and readily visible label on the truck stating the manner in which the truck has been modified or altered together with the date of the modification or alteration, and the name of the organization that accomplished the tasks.

10.1.6 WARNING DEVICES

a. Every truck shall be equipped with an operator-controlled horn, whistle, gong, or other sound-producing device(s).

b. The using organization shall determine if operating conditions require the truck to be equipped with additional sound-producing or visual devices (such as lights or blinkers), and shall be responsible for providing and maintaining such devices. Backup or motion alarms that sound continuously may be warranted in special cases but generally are less effective than operator-controlled devices.

10.1.7 OVERHEAD GUARDS

An overhead guard is intended to offer protection to the operator from falling objects, but it cannot protect against every possible impact. Therefore, it should not be considered a substitute for good judgment and care in load handling.

a. High lift rider trucks, including order picker trucks, shall be equipped with an overhead guard manufactured in accordance with ANSI/ITSDF B56.1, unless the following conditions are met:

   1. Vertical movement of the lifting mechanism is restricted to 72 in. (1800 mm) or less from the ground.

   2. The truck will be operated only in an area where:

      i. The bottom of the top tiered load is not higher than 72 in. (1800 mm) and the top is not more than 120 in. (3000 mm) from the ground where tiered.

      ii. Only stable (preferably interlocked, unitized or containerized) loads are handled.

      iii. There is protection against falling objects from adjacent high stack areas.

b. Rough terrain forklift trucks shall be fitted with an overhead guard manufactured in accordance with ANSI/ITSDF B56.6.

10.1.8 FIRE HAZARD AREAS

Powered forklift trucks for operation in fire hazard areas shall be of the type recommended in ANSI/NFPA 505 ("Powered Industrial Trucks, Type Designation and Areas of Use").

10.1.9 WORK ATMOSPHERE

a. The operation of forklift trucks may effect the concentrations of carbon monoxide and oxygen in the work location. Concentrations of these materials in the work location must meet Z-1 Limits for Air Contaminants, Occupational Safety and Health Standards for General Industry.

b. Where general lighting is less than 2 lumens per square foot, auxiliary directional lighting shall be provided on the truck.

Figure 10-3. Types of Trucks. (sheet 1 of 6)

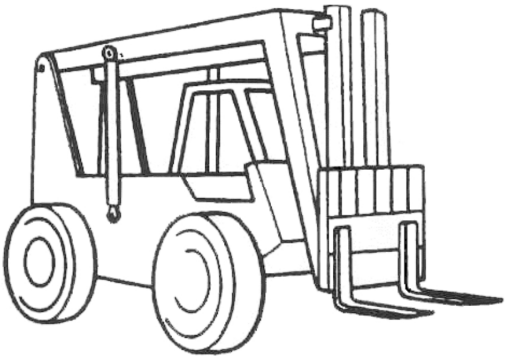

-- Variable Reach Truck Linkage Type
-- Four Wheel Steer
-- Two Wheel Steer
-- Four Wheel Drive
-- Two Wheel Drive

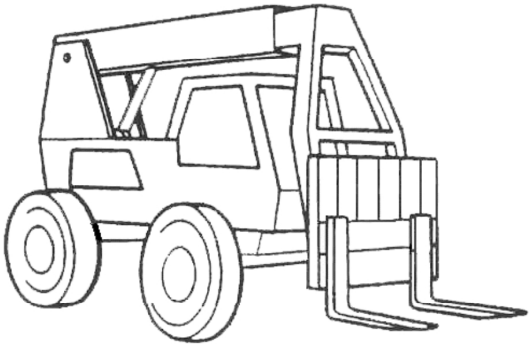

-- Variable Reach Truck Boom Type
-- Four Wheel Steer
-- Two Wheel Steer
-- Four Wheel Drive
-- Two Wheel Drive

-- Variable Mast
-- Two Wheel Steer
-- Two Wheel Drive

Figure 10-3. Types of Trucks (sheet 2 of 6)

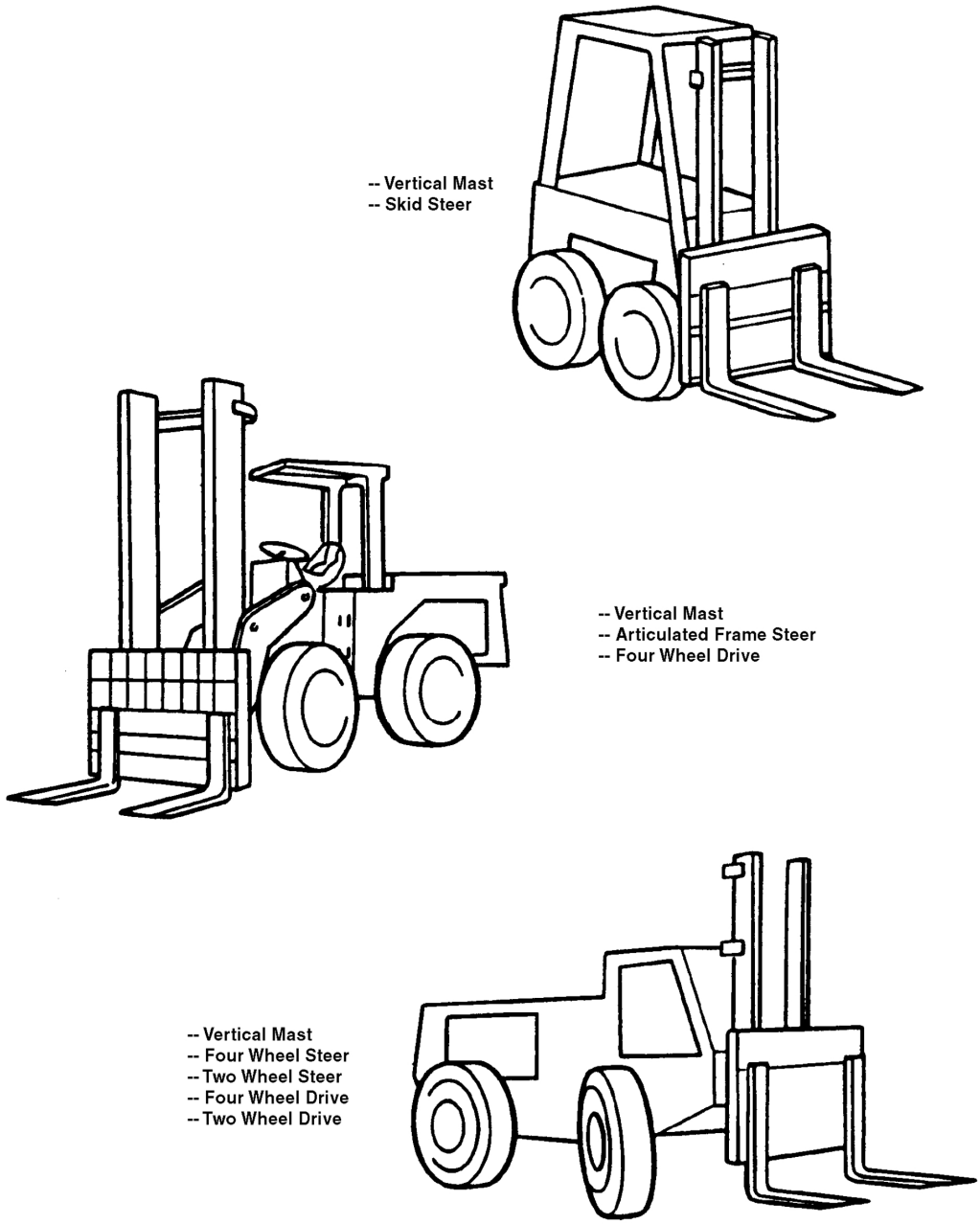

Figure 10-3. Types of Trucks (sheet 3 of 6)

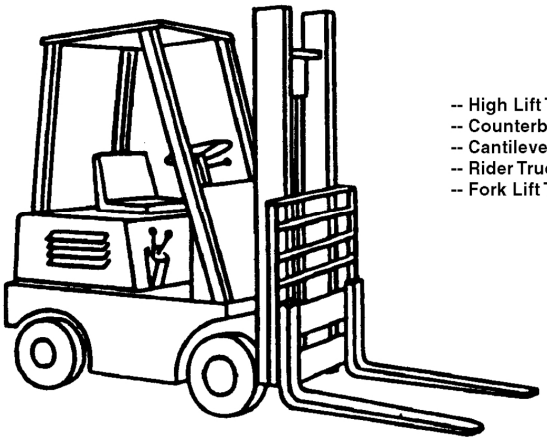

-- High Lift Truck
-- Counterbalanced Truck
-- Cantilever Truck
-- Rider Truck
-- Fork Lift Truck

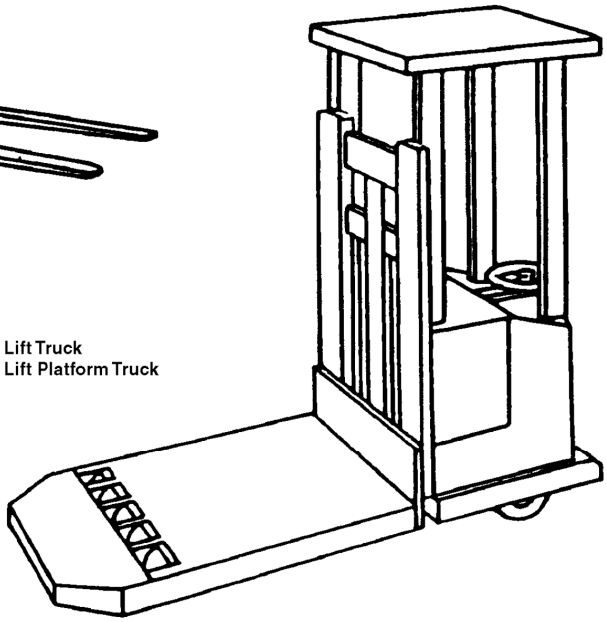

-- High Lift Truck
-- High Lift Platform Truck

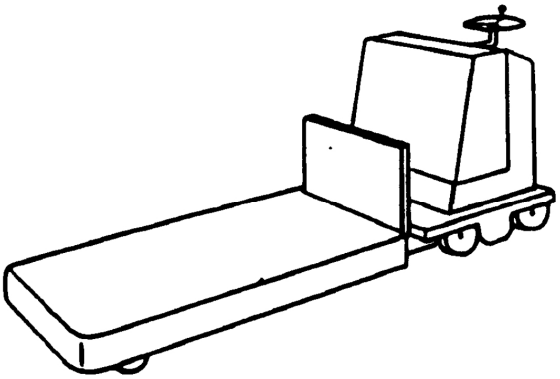

-- Low Lift Truck
-- Low Lift Platform Truck

Figure10-3. Types of Trucks. (sheet 4 of 6)

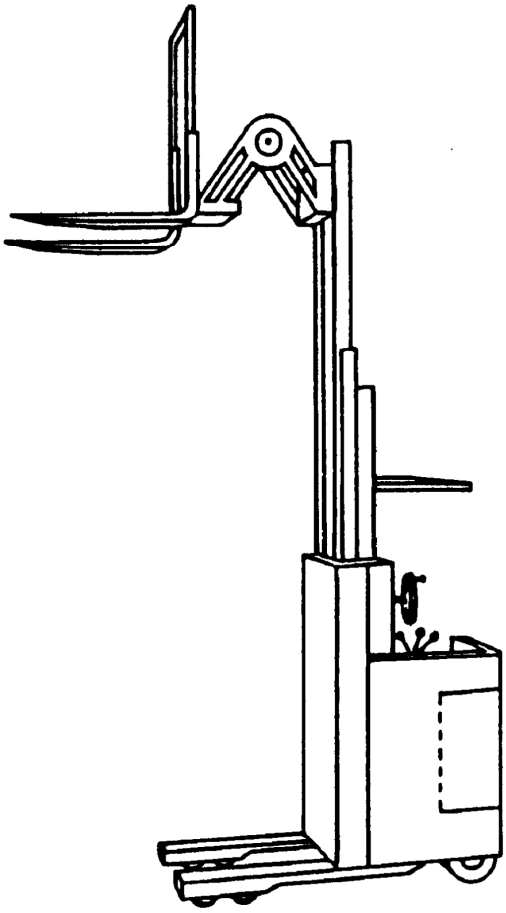

-- Reach Rider Trucks

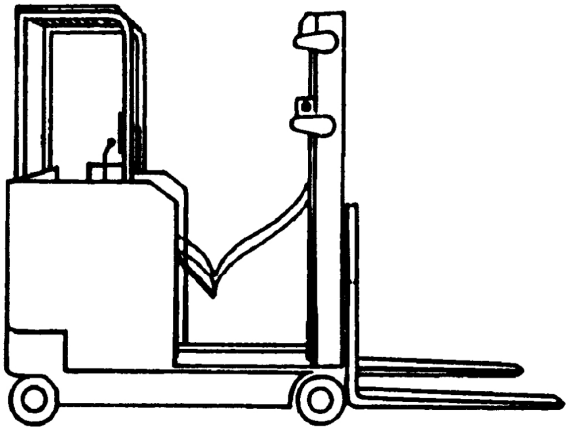

Figure 10-3. Types of Trucks. (sheet 5 of 6)

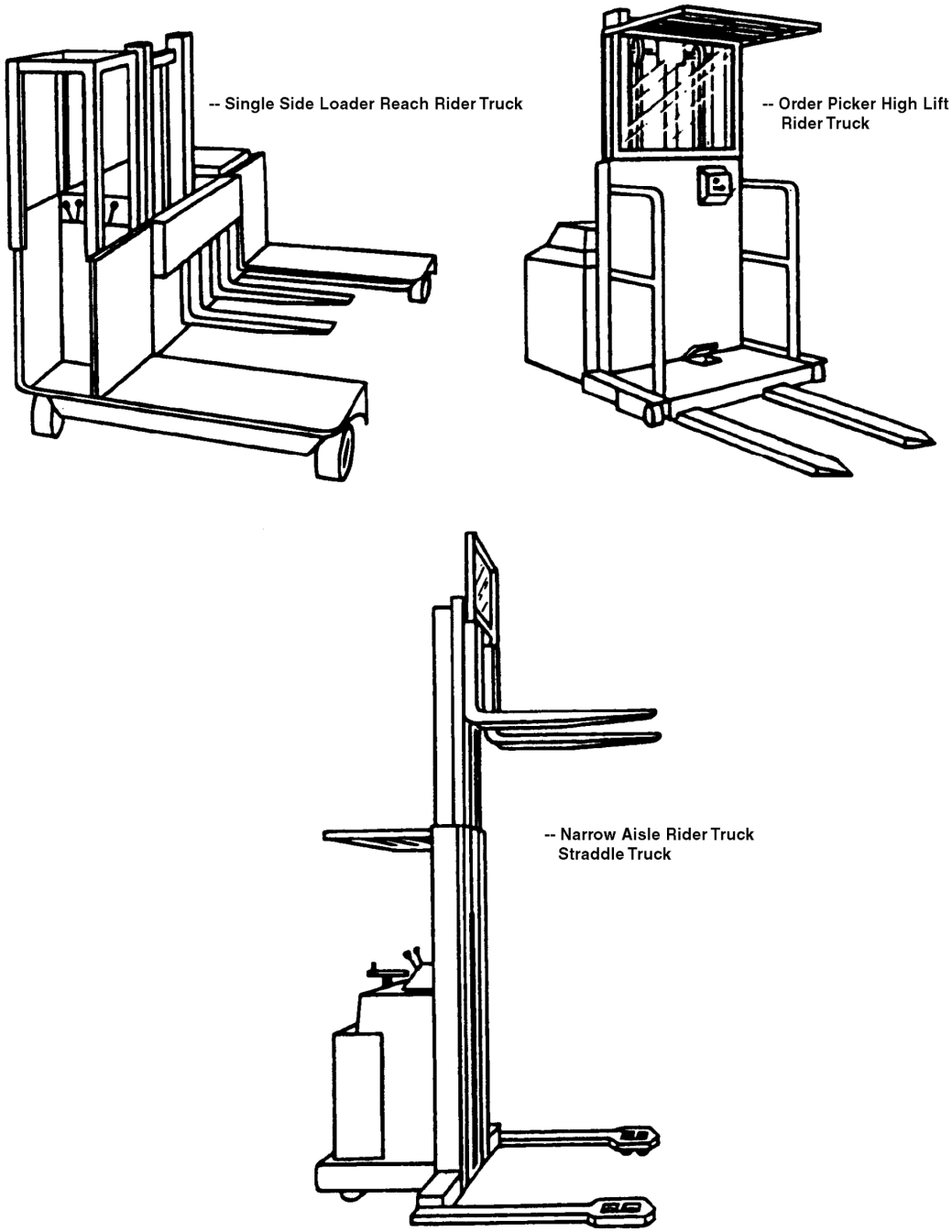

Figure 10-3. Types of Trucks (sheet 6 of 6)

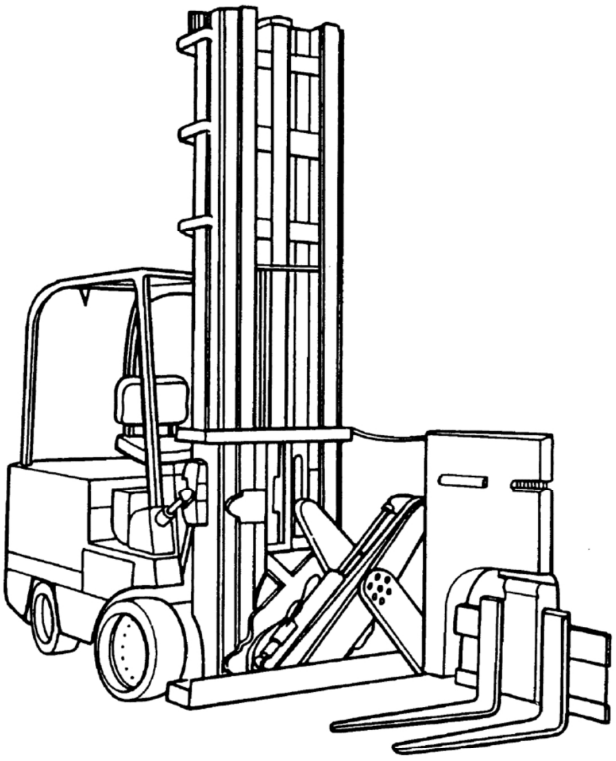

Counterbalanced Front/Side Loader Lift Truck Straddle Truck

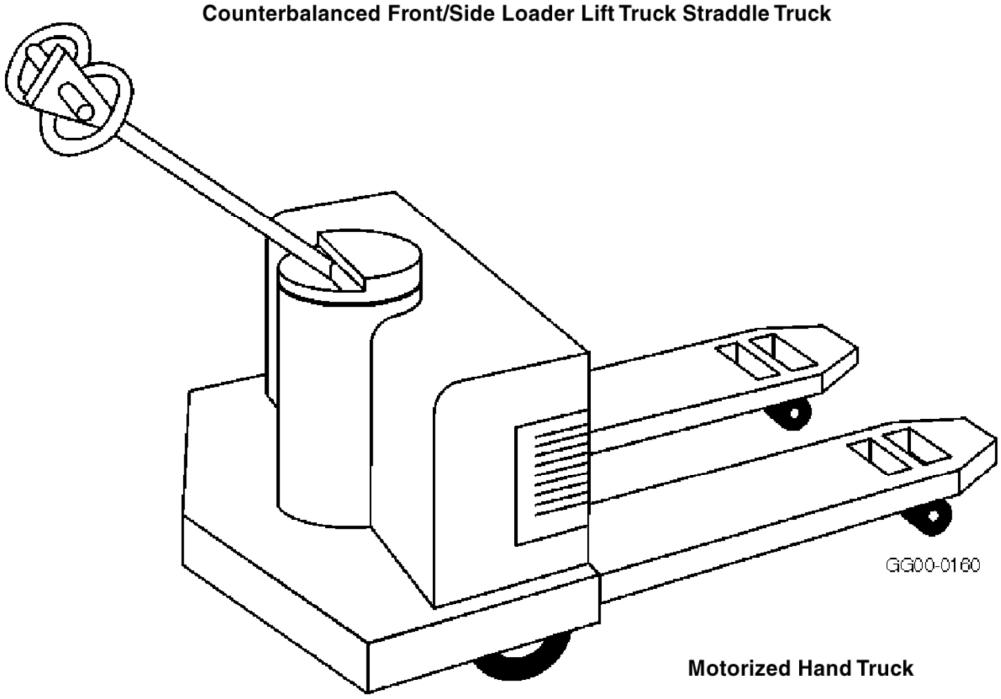

Motorized Hand Truck

Figure 10-4. Manually Operated Pallet Trucks

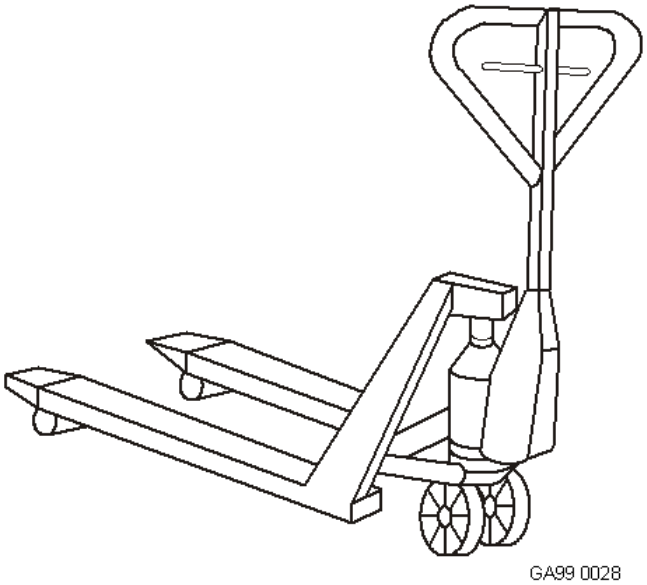

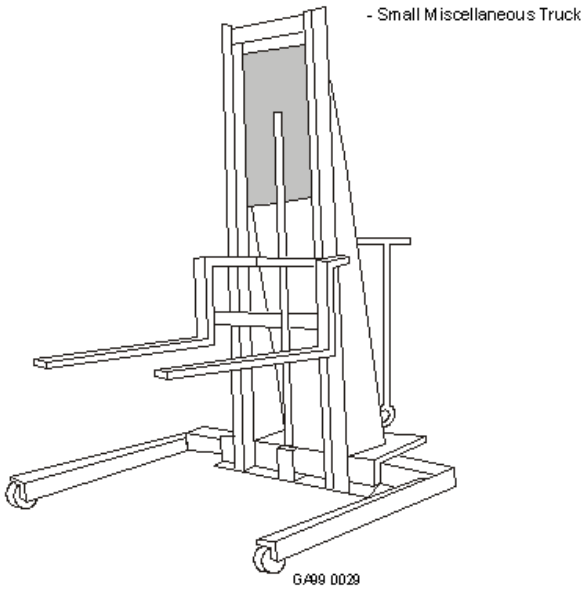

10.2 TYPE DESIGNATIONS AND AREAS OF USE

10.2.1 TYPE DESIGNATION

It is essential to use proper equipment in hazardous (explosive) areas. Trucks approved for use in hazardous areas shall have the manufacturer's label or some other identifying mark indicating approval for the intended use by a recognized national testing laboratory [e.g., Underwriters Laboratories (UL or Factory Mutual (FM)].

a. Durable markers indicating the designation of the type of truck for use in hazardous areas shall be applied to each side of the vehicle in a visible but protected area. These markers shall be distinctive in shape, as indicated in Figure 10-1.

b. Hazardous-Area Signs. The entrance to hazardous areas shall be posted with a sign to identify the type of forklift truck permitted, see Figure 10-2, or the truck shall be clearly marked as to the area(s) it is not to enter.

10.2.1.1 Non-Hazardous Areas

The following units are not suitable for use in hazardous areas since they include only minimum safeguards against inherent fire hazards:

a. *Type D Forklifts* – diesel-powered units having minimum acceptable safeguards against inherent fire hazards

b. *Type E Forklifts* – electrically powered units having minimum acceptable safeguards against inherent fire and electrical shock hazards

c. *Type G Forklifts* – gasoline-powered units having minimum acceptable safeguards against inherent fire hazards

d. *Type LP Forklifts* – liquefied-petroleum-gas-powered units having minimum acceptable safeguards against inherent fire hazards

10.2.1.2 Hazardous Areas

The following units are suitable for use in hazardous areas since they are equipped with additional safeguards (i.e., special exhaust, fuel, or electrical systems) or other modifications against inherent fire hazards:

a. *Type DS Forklifts* – diesel-powered units that are provided with all the requirements for the type D units and that have additional safeguards to the exhaust, fuel, and electrical systems

b. *Type DY Forklifts* – diesel-powered units that have all the safeguards of the type DS units except that they do not have any electrical equipment, including ignition; they are equipped with temperature-limitation features

c. *Type ES Forklifts* – electrically powered units that are provided with all the requirements for the type E units and that have additional safeguards to the electrical system to prevent emission of hazardous sparks and to limit surface temperatures

d. *Type EE Forklifts* – electrically powered units that are provided with all the requirements for the type E and ES units, and that also have electric motors and all other electrical equipment completely enclosed

e. *Type EX Forklifts* – electrically powered units that differ from type E, ES, or EE units in that the electrical fittings and equipment are designed, constructed, and assembled so that the units may be used in atmospheres containing specifically named flammable vapors, dusts, and, under certain conditions, fibers; type EX units are specifically tested and classified for use in Class I, Group D, or for Class II, Group G locations as defined in NFPA 70, *National Electrical Code*

f. *Type GS Forklifts* – gasoline-powered units that, in addition to all the requirements for the type G units, are provided with additional safeguards to the exhaust, fuel, and electrical systems

g. *Type LPS Forklifts* – liquefied-petroleum-gas-powered units that, in addition to the requirements for the type LP units, are

provided with additional safeguards to the exhaust, fuel, and electrical systems

10.2.2 SPECIFIC AREAS OF USE

The atmosphere or location where the powered forklift is to be used shall be classified. Location classifications are described as follows:

a. *Class I* – locations in which flammable gases or vapors are present or may be present in the air in quantities sufficient to produce explosive or ignitable mixtures.

b. *Class II* – locations that are hazardous because of the presence of combustible dust.

c. *Class III* – locations where easily ignitable fibers or filings are present but are not likely to be suspended in quantities sufficient to produce ignitable mixtures.

d. *Unclassified* – locations not possessing atmospheres defined as Class I, II, or III locations.

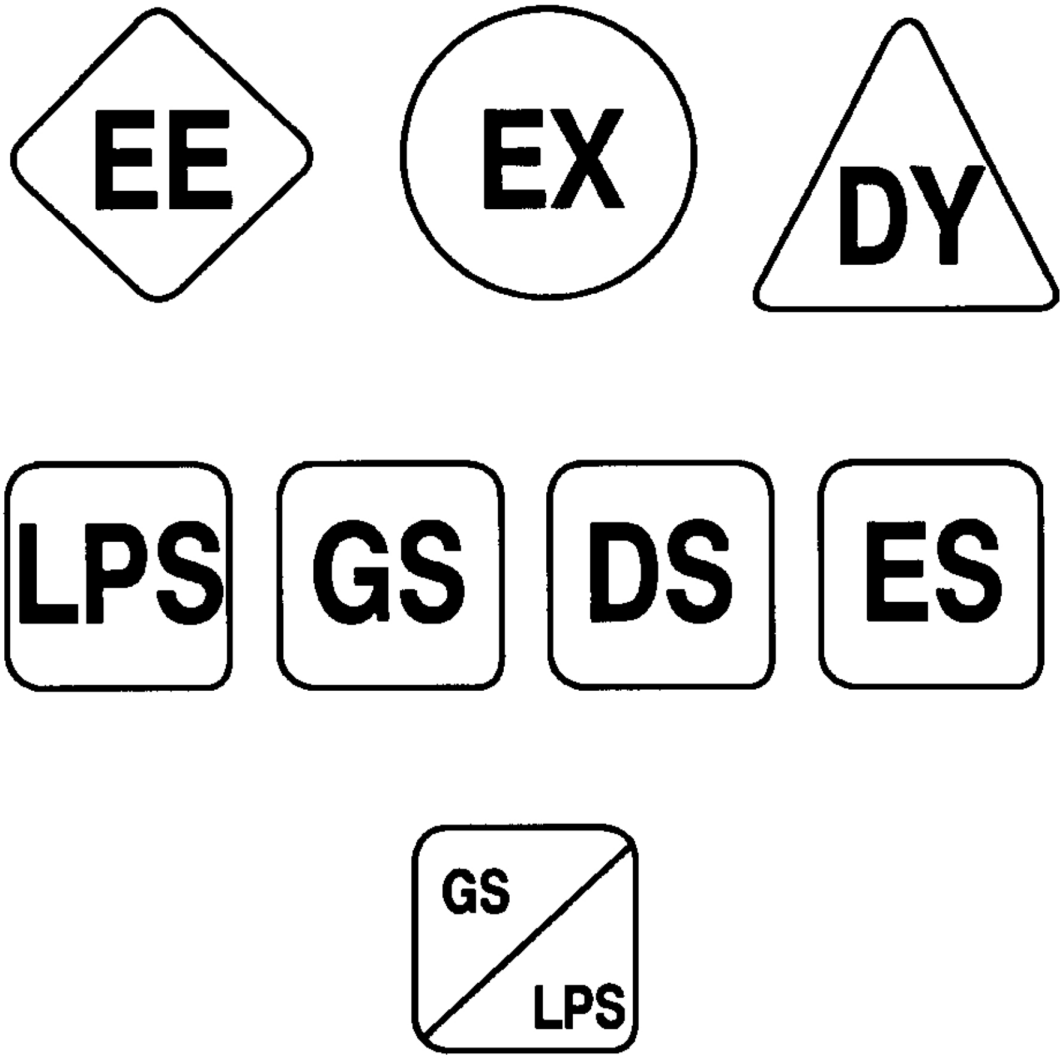

Note: The markers for EE, EX, and DY are 5 in. (12.7 cm) high. The rest are 4 in. (10 cm) square. The signs shall have black borders and lettering on a yellow background.

Figure 10-1. Markers to identify type of industrial truck.

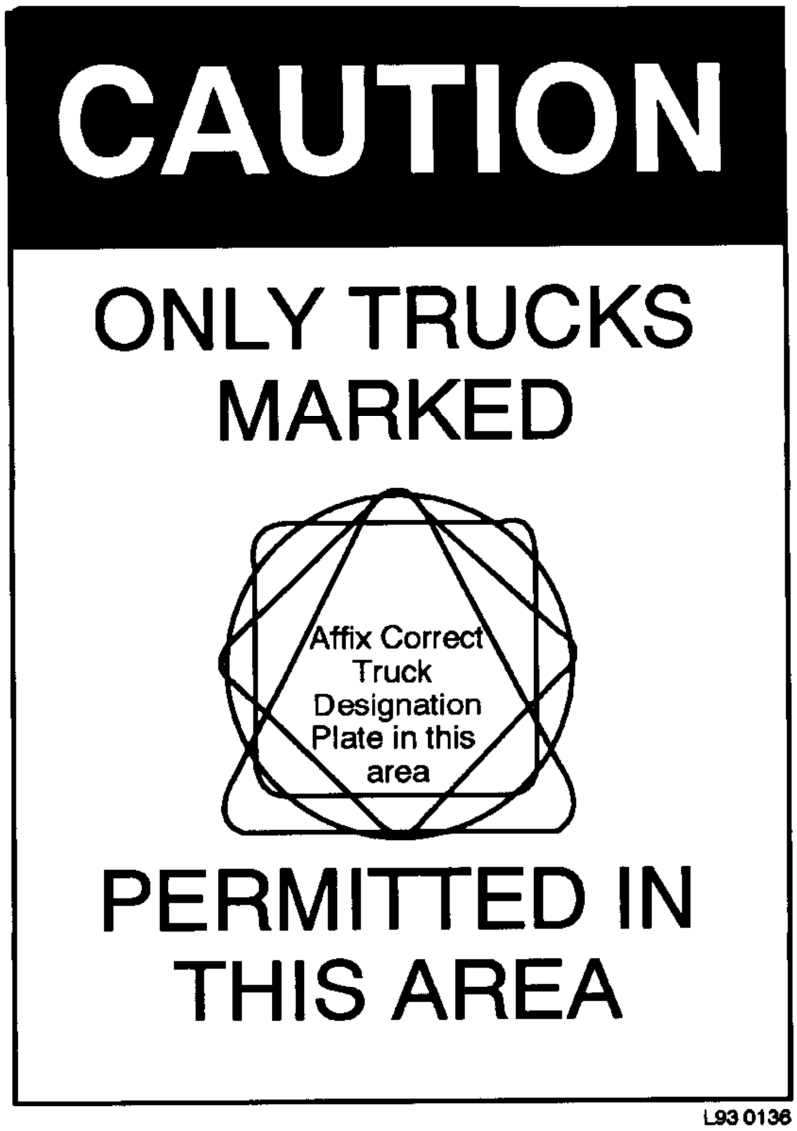

Figure 10-2. Building signs for posting at entrance to hazardous areas.

NOTE: The minimum width of the sign is 11 in. (28 cm); the minimum height is 16 in. (40 cm). The sign shall have the word "caution" in yellow letters on a black background. The body of the sign shall have black letters on a yellow background. A marker identical to the one used on the side of the truck as shown in Figure 10-1, shall be installed on the sign.

10.3 INSPECTIONS

10.3.1 DAILY PRE-OPERATIONAL CHECK

a. Instructions for pre-operational inspections shall be readily available to the operator. It is recommended that the instructions be attached to the equipment. Standard instructions will be suitable for most forklift trucks; however, operating conditions may require additional instructions. A sample Pre-operational inspection checklist is included as Exhibit 1, which appears at the end of this chapter.

b. Before operating the truck, check its condition, giving special attention to the following:

   1. Condition of the tires
   2. Tire inflation, if pneumatic tires
   3. Warning and safety devices
   4. Lights
   5. Battery
   6. Controls
   7. Lift and tilt systems
   8. Forks or other load-engaging means
   9. Chains and cables
   10. Limit switches
   11. Brakes
   12. Steering mechanism
   13. Fuel system(s)
   14. Additional items as specified by the manufacturer or that are unique to the facility at which the truck is operated.

c. Conditions adversely affecting safety shall be corrected before the forklift truck is placed into service.

10.3.2 INITIAL INSPECTION OF NEW AND RENTED EQUIPMENT

Prior to initial use, all new, or newly arrived rental equipment, or modified forklifts shall be inspected by a qualified inspector to ensure compliance with the provisions of this chapter. For new equipment, an initial inspection shall verify that requirements of the purchase order (or rental agreement) have been met and that the equipment is suitable for its intended use. This inspection shall be documented and should be retained in the forklift truck's history file. A sample load test and inspection form is included as Exhibit II, which appears at the end of this chapter. This form is intended to be a sample only and is not intended to be mandatory.

10.3.3 INSPECTION AND MAINTENANCE

Inspection and maintenance of powered forklift trucks shall be performed in conformance with the following practices:

a. The inspection and maintenance program shall follow the manufacturer's recommended procedures. If equipment maintenance or inspection procedures deviate from published manufacturer's recommendations, the alternate procedures shall be approved in advance by the manufacturer or another qualified person and be kept readily available.

b. Only trained and authorized personnel shall be permitted to inspect, maintain, repair, and adjust forklift trucks.

c. No repairs shall be made while the truck is in a hazardous (explosive/classified) area.

d. Inspect brakes, steering mechanisms, control mechanisms, warning devices, lights, governors, lift-overload devices, guards, and safety devices regularly and maintain them in a safe-operating condition.

e. Carefully inspect all parts of lift and tilt mechanisms and frame members and maintain them in a safe-operating condition.

f. Check for suspect/counterfeit parts (see Terminology and Definitions, Chapter 1).

g. For special trucks or devices designed and approved for operation in hazardous areas, ensure that the original, approved safe-operating features are preserved by maintenance.

h. Check fuel systems for leaks and for the proper condition of the parts. Give special consideration in the case f a fuel system leak. Take action to prevent use of the truck until the leak has been corrected.

i. Inspect and maintain all hydraulic systems. Check tilt cylinders, valves, and other similar parts to ensure that drift or leakage has not developed to the extent that it would create a hazard.

j. Maintain capacity, operation safety, and maintenance-instruction plates, tags, or decals in legible condition.

k. Inspect and maintain batteries, motors, controllers, limit switches, protective devices, electrical conductors, and connections. Pay special attention to the condition of electrical insulation.

l. Those repairs to the fuel and ignition systems of industrial trucks which involve fire hazards shall be conducted only in locations designated for such repairs.

m. Trucks in need of repairs to the electrical system shall have the battery disconnected prior to such repairs.

n. Water mufflers shall be filled daily or as frequently as is necessary to prevent depletion of the supply of water below 75 percent of the filled capacity. Vehicles with mufflers having screens or other parts that may become clogged shall not be operated while such screens or parts are clogged. Any vehicle that emits hazardous sparks or flames from the exhaust system shall immediately be removed from service, and not returned to service until the cause for the emission of such sparks and flames has been eliminated.

o. When temperature of any part of any truck is found to be in excess of its normal operating temperature, the vehicle shall be removed from service and not returned to service until the cause for such overheating has been eliminated.

p. Industrial trucks originally approved for the use of gasoline for fuel may be converted to liquefied petroleum gas fuel provided the complete conversion results in a truck which embodies the features specified for LP or LPS designated trucks. Conversion equipment and the recommended method of installation shall be approved by the manufacturer.

q. All parts that require replacement shall be replaced only with parts that are equivalent, in regards to safety, to those used in the original design.

r. Attachments shall be included in a scheduled maintenance/inspection program. Inspection steps shall be tailored for the attachment. Load-bearing components shall be examined for deformation and load-bearing welds shall be visually examined for cracks. Mechanical or hydraulic components shall be inspected and maintained in accordance with the manufacturer's instructions.

s. Attachments shall be inspected not less than annually and the inspection should be documented.

t. Hooks that are included as part of attachments shall be inspected as specified for hooks on cranes/hoists (see Chapter 13.0, "Load Hooks").

10.3.4 FORKS

10.3.4.1 Fork Load Rating

Forks used in pairs (the normal arrangement) shall have a rated capacity of each fork at least half the manufacturer's truck rated capacity at the center distance shown on the forklift truck nameplate.

10.3.4.2 Fork Inspections

a. Forks in use (single shift operation) shall be inspected at intervals of not more than 12 months or whenever any defect or

permanent deformation is detected. Severe use applications require more frequent inspection at an interval set by facility management.

b. Fork inspection shall be carried out by a qualified inspector with the aim of detecting any damage, failure, deformation, or other condition that might impair safe use. A fork that shows any of the following defects shall be withdrawn from service, and shall not be returned to service until it is satisfactorily repaired by the fork manufacturer or an expert of equal competence. Fork inspection shall include:

1. *Surface Cracks* – A thorough visual examination for cracks and, if considered necessary, non-destructive crack detection, with special attention to the heel and to the welds that attach the mounting components to the fork blank. Inspection for cracks shall include any mounting mechanisms of the fork blank to the fork carrier. Forks shall not be returned to service if surface cracks are detected.

2. *Fork Tine Inspection* – Examination for straightness of blade and shank, fork angle (upper face of blade to load face of the shank), fork blade and shank wear. Difference in height of fork tips may vary from manufacturer to manufacturer and with tine length. For these reasons, fork tine inspections shall be done in accordance with manufacturers requirements.

3. *Positioning Lock* – Confirm that the Positioning Lock (when provided) is in good repair and in correct working order. If any fault is found, the fork shall be withdrawn from service until satisfactory repairs are made.

4. *Fork Hooks Wear* – When fork hooks are provided, the support face of the top hook and the retaining faces of both hooks shall be checked for wear, crushing, and other local deformations. If clearance between the fork and the fork carrier becomes excessive, the fork shall not be returned to service until repaired in accordance with paragraph 10.3.4.3.

5. *Fork Marking* – When fork marking is not clearly legible, it shall be renewed. Marking shall be renewed per instructions from the original fork supplier.

10.3.4.3 Fork Repair

Only the manufacturer of the fork or an expert of equal competence shall decide if a fork may be repaired for continued use, and the repairs shall only be carried out by such authorities. Surface cracks or wear should not be repaired by welding. When resetting repairs are required, the fork shall be subject to heat treatment.

10.3.5 BATTERY MAINTENANCE

a. Facilities shall be provided for flushing and neutralizing spilled electrolyte, for fire protection, for protecting charging apparatus from damage by trucks, and for adequate ventilation for dispersal of fumes from gassing batteries.

b. A conveyor, overhead hoist, or equivalent material handling equipment shall be provided for handling batteries.

c. Reinstalled batteries shall be properly positioned and secured in the truck.

d. A carboy tilter or siphon shall be provided for handling electrolyte.

e. When introducing electrolyte into batteries, acid shall be poured into water; water shall not be poured into acid.

f. Trucks shall be properly positioned and brake applied before attempting to change or charge batteries.

g. Care shall be taken to assure that vent caps are functioning. The battery (or compartment) cover(s) shall be open to dissipate heat.

h. Smoking shall be prohibited in the charging area.

i. Precautions shall be taken to prevent open flames, sparks or electric arcs in battery charging areas.

j. Tools and other metallic objects shall be kept away from the top of uncovered batteries.

10.3.6 HISTORY FILE

A history file should be maintained for each forklift truck. The history file should contain information necessary to operate, maintain, test, and evaluate the forklift truck. A typical history file would contain the following types of documentation, as applicable:

a. Manufacturer's operation and maintenance manuals.

b. Waivers applicable to the forklift truck.

c. Documentation for replacement forks.

d. Documentation from the manufacturer authorizing modifications to the forklift truck.

e. Inspection procedures and inspections records.

f. Records of repair, modification, and overhaul.

g. Fork inspection records, including record of fork repair.

h. Authorization from truck manufacturer to use specifically identified attachments.

NOTE: For forklift trucks on rental, ensure that a suitable maintenance and inspection program is established for the duration of the rental period. For rental equipment onsite for 6 months or less, a history file is not recommended.

10.4 TESTING

10.4.1 FORKLIFT TRUCK LOAD TEST

Forklift truck load tests are not routinely required.

a. Load tests shall not be conducted until verification that inspection and maintenance is up to date.

b. Load tests shall be performed after major repair or modification to components that affect the load-carrying ability of the truck.

c. The manufacturer should be consulted if questions arise as to whether a load test is appropriate.

d. Forklift trucks shall be load tested by or under the direction of a qualified person and in accordance with the manufacturer's recommendations.

e. Test weights shall be accurate within –5%, +0% of stipulated values.

f. After a load test is performed, a written report shall be furnished by the qualified person that shows test procedures, and confirms the adequacy of repairs or alterations. Test reports shall be retained in the truck's history file.

10.4.2 FORK LOAD TEST

A fork that has undergone repair, other than repair or replacement of positioning locks or marking, shall be subject to a load test as described in ANSI/ITSDF B56.1, Section 7.27, "Forks," Item 3, which lists loading and method of test for forks; except for the test load, which shall correspond to 250 percent of the rated capacity marked on the fork.

10.4.3 ATTACHMENT LOAD TEST

a. Load capacity of an attachment shall be verified by the manufacturer or by a load test at 100 percent capacity that is performed onsite. Load tests are not routinely required since a catalog cut, user's manual, decals on attachment, or other manufacturer's data serves as capacity verification.

10.5 OPERATIONS

The following shall apply to all personnel involved in forklift operations. At the initial stage of the planning process, an appointed person shall classify each lift into one of the DOE-specified categories (ordinary, critical, or preengineered production).

10.5.1 CONDUCT OF OPERATOR

The following requirements shall be observed by the operator when operating forklift trucks.

10.5.1.1 General

a. Safe operation is the responsibility of the operator. Report all accidents and "near misses" promptly.

b. The operator shall develop safe working habits and also be aware of hazardous conditions in order to protect himself, other personnel, the truck, and other material.

c. The operator shall be familiar with the operation and function of all controls and instruments before operating the truck.

d. Before operating any truck, the operator shall be familiar with unusual operating conditions which may require additional safety precautions or special operating instructions.

e. Be certain the truck has successfully passed a preuse inspection.

f. Do not start or operate the truck, any of its functions or attachments, from any place other than from the designated operator's position.

g. Keep hands and feet inside the operator's designated area or compartment. Do not put any part of the body outside the operator compartment of the truck.

h. Never put any part of the body within the reach mechanism of the truck or other attachments.

i. Avoid reaching through the mast for any purpose.

j. To safeguard pedestrians, understand the truck's limitations and observe the following precautions:

   1. Do not drive a truck up to anyone standing in front of an object.

   2. Ensure that personnel stand clear of the rear swing area before conducting turning maneuvers.

   3. Exercise particular care at cross aisles, doorways, and other locations where pedestrians may step into the path of travel of the truck.

   4. Do not allow anyone to stand or pass under the elevated portion of any truck, whether empty or loaded.

k. Do not permit passengers to ride on powered industrial trucks unless a safe place to ride has been provided by the manufacturer.

l. Ensure that fire aisles, access to stairways, and fire equipment is kept clear.

m. A powered industrial truck is considered unattended when the operator is more than 25 ft. (7.6 m) from the truck, which remains in his view, or whenever the operator leaves the truck and it is not in his view.

n. Before leaving the operator's position, the operator shall perform the following:

   1. Bring truck to a complete stop.

   2. Place directional controls in neutral.

   3. Apply the parking brake.

   4. Fully lower load-engaging means, unless supporting an elevated platform.

o. In addition, when leaving the truck unattended the operator shall perform the following:

   1. Stop the engine or turn off the controls.

   2. If the truck must be left on an incline, block the wheels.

3. Fully lower the load-engaging means.

p. Maintain a safe distance from the edge of ramps, platforms, and other similar working surfaces. Do not move railroad cars with a powered industrial truck.

q. Do not use a truck for operating or closing railroad car doors except as follows:

1. Unless the truck utilizes a device specifically designed for opening and closing railroad car doors and the operator is trained in its use.

2. The design of the door-opening device shall require the truck to travel parallel to the railroad car, with the force applied in a direction parallel with the door travel.

3. Care should be exercised when engaging the railroad car door with the door opening device, in order to prevent damage to the doors and/or fork truck by heavy impact forces.

4. The entire door opening operation shall be in full view of the operator.

5. The fork truck shall always be positioned to safeguard the dock attendant while removing the door lock pin.

6. Whenever a railroad car door requires an abnormal force to open, the truck operator shall report the condition to his supervisor.

r. Wheel stops, hand brakes, or other recognized positive protection shall be provided to prevent railroad cars from moving during loading or unloading operations.

s. Consider both the truck and load weight when operating in railcars and semitrailers.

t. Inspect floors on trucks, boxcars, unfamiliar ramps, or platforms before start of operation.

u. Other workers should not be inside the truck when the forklift truck is performing loading or unloading operations. Load arrangements and spacing issues should be determined before the forklift enters the truck.

v. Fixed jacks or supports may be needed to prevent upending or corner dipping when powered industrial trucks are driven on and off semitrailers that are not coupled to the tractor.

w. The brakes of highway trucks shall be set and wheel chocks placed under the rear wheels to prevent the trucks from rolling while they are boarded.

x. Care shall be taken to not contact overhead installations such as lights, wiring, pipes, sprinkler systems, etc. If in doubt, measure.

y. Motorized hand trucks shall not be ridden unless they are of the hand/rider design.

10.5.1.2 Traveling

a. Observe all traffic regulations and under all travel conditions, operate the truck at a speed that will permit it to be brought to a stop in a safe manner. Unless facility-specific procedures state otherwise, the guideline is: within plant buildings – 5 mph; on plant roads – 15 mph. Drive slowly around curves.

b. Yield the right of way to pedestrians and emergency vehicles. Whenever possible, establish eye contact with approaching pedestrians or vehicle drivers before continuing.

c. Do not pass another truck traveling in the same direction at intersections, blind spots, or at other locations where vision is obstructed.

d. Slow down and sound horn at cross aisles and other locations where vision is obstructed.

e. Railroad tracks shall be crossed diagonally whenever possible.

f. Never travel with forks raised to unnecessary heights. Approximately 4 to 6 inches (10 to 15 cm) above floor level is adequate.

g. Do not park closer than 6 ft (1800 mm) to the nearest rail or a railroad track.

h. Face in the direction of travel, except if the load being carried obstructs forward view. In such cases, travel with the load trailing.

i. When ascending or descending grades, ramps, and inclines:

   1. In excess of 5 percent grade, drive loaded rider trucks with the load upgrade.

   2. Use low gear or slowest speed control.

   3. Operate unloaded trucks with the load-engaging means downgrade.

   4. The load and load-engaging means shall be tilted back, if applicable and raised only as far as necessary to clear the road surface.

   5. Avoid turning if possible, and normally travel straight up and down.

j. While turning, be cautious of rear end swing and keep clear of the edge of loading docks.

k. Make starts, stops, turns, or direction reversals in a smooth manner s as not to shift load and/or overturn the truck.

l. Do no indulge in stunt driving or horseplay.

m. Slow down for wet and slippery floors.

n. Before driving over a dockboard or bridge plate, be sure that it is properly secured.

o. Drive carefully and slowly across the dockboard or bridge plate, and never exceed its rated capacity.

p. Do not drive trucks onto any elevator unless specifically authorized to do so. In cases operation are authorized:

   1. Do not exceed the capacity of the elevator.

   2. Approach elevators slowly, and then enter squarely after the elevator car is properly leveled.

   3. Once on the elevator, neutralize the controls, shut off the power, and set brakes.

   4. It is advisable that all other personnel leave the elevator before truck is allowed to enter or leave.

q. Unless a towing hitch is supplied by the manufacturer, do not use forklift trucks as tow trucks. When a towing hitch is provided, use tow bars rather than wire rope for towing.

r. At the end of the operator's shift, return the forklift truck to its assigned parking place, set brakes, fully lower load-engaging means, place controls in neutral position, turn ignition off, and secure the key.

s. If the truck is equipped with a seat belt, use it.

10.5.1.3 Loading

a. Since the load rating for forklifts may be based on stability or hydraulic or structural competence, do not exceed the rated capacity in operational application.

b. The designated person shall ensure that the weight of a load approaching the rated capacity (combination of weight and location of the center of gravity) has been determined within –10 percent, +0 percent before it is lifted.

c. Only stable, safely arranged loads shall be handled. Block and secure them if necessary.

d. Caution shall be exercised when handling off-center loads which cannot be centered.

e. Always spread the forks to suit the load width.

f. Extra caution s required when handling loads exceeding the dimensions used to establish truck capacity. Stability and maneuverability may be adversely affected.

g. The forks shall be placed under the load as far as possible; the mast shall be carefully tilted backward to stabilize the load.

h. Do not transport loads or miscellaneous items within the operator's compartment or other areas of the truck, unless a secure area has been provided and designated by the user.

i. A load backrest extension shall be used whenever necessary to minimize the possibility of the load or part of it from falling rearward.

j. Do not attach or operate any attachment on a forklift truck that has not been approved for use by forklift truck manufacturer or a qualified engineer in the absence of manufacturer approval.

k. When attachments are used, extra care shall be taken in securing, manipulating, positioning, and transporting the load.

l. Operate trucks equipped with attachments as partially loaded trucks when not handling a load.

m. Fork length should be at least two thirds of the load length.

n. Use extreme care when tilting load forward r backward, particularly when high tiering.

o. Do not tilt forward with forks elevated except to pick up or deposit a load over a rack or stack.

p. When stacking or tiering, use only enough backward tilt to stabilize the load.

q. Rigging loads from the tines of a forklift, (attaching rigging to the forks to support a suspended load) shall only be performed by qualified personnel in accordance with approved site procedures.

r. Never lift with one fork without an engineering analysis and approval.

s. Use guides and signalers as necessary. If in doubt, check the conditions personally before proceeding. Standard hand signals are shown in Figure 10.5, "Hand Signals."

t. Do not block fire extinguishers, fire protection sprinklers, or alarm stations when stacking loads.

10.5.2 LIFTING OF PERSONNEL

Only the operator-up high lift trucks have been designed to lift personnel. If a work platform is used on forklift trucks designed and intended for handling materials, take the following precautions:

a. Use a lift platform manufactured for the purpose of lifting personnel with a forklift truck. The platform shall include:

   1. A 4 in. (10 cm) minimum height toe plate provided on the work platform.

   2. The floor of the platform located not more than 8 in. (20 cm) above the upper face of the supporting truck fork blade.

   3. A restraining means such as a guard rail having a height above the platform floor of not less than 36 in. (90 cm) or more than 42 in. (110 cm) around its upper periphery and including a midrail.

   4. An access opening in the guard rail may be hinged or removable, or chains may be used if proper positioning is easily accomplished and secured condition is discernible.

   5. Guard rails and access openings shall be capable of withstanding a concentrated force of 200 lb (91 kg) in any direction.

   6. Means to securely attach the platform to the lifting carriage or forks in such a manner that it cannot slide or bounce off the forks.

   7. Means to correctly locate the platform centered laterally on the truck.

   8. Floor dimensions that neither exceed two times the load center distance listed on the truck nameplate, measured parallel to the longitudinal center plane of the truck, nor have a width greater than the overall width of the truck (measured across the load bearing tires) plus 10 in. (25 cm) on either side.

   9. The following information should be prominently indicated on the platform:

i. Maximum load including personnel and equipment;

ii. Weight of empty platform;

iii. Minimum capacity of the truck on which the platform can be used.

b. The combined weight of the platform, load, and personnel shall not exceed one-half of the capacity as indicated on the nameplate of the truck on which the platform is used.

c. Whenever a truck (except for high-lift order-picker trucks) is equipped with vertical hoisting controls elevateable with the lifting carriage or forks, take the following additional precautions to protect personnel:

1. Means shall be provided whereby personnel on the platform can shut off power to the truck.

2. Means shall be provided to render inoperative all operating controls on the elevating platform, when the controls on the elevating platform have been selected for use; only one location of controls shall be capable of being operated at one time.

3. Emergency-lowering means available at ground level should be provided; such means shall be protected against misuse.

d. Take the following precautions whenever personnel are elevated with a forklift truck:

1. Ensure the truck has a firm and level footing.

2. Place all travel controls in neutral and set parking brake.

3. Before elevating personnel, mark area with cones or other devices to warn of work by elevated personnel.

4. Lift and lower personnel smoothly, with caution, and only at their request.

5. Avoid overhead obstructions and electric wires.

6. Keep hands and feet clear of controls other than those in use.

7. Move truck and/or platform slowly, only for minor adjustments in horizontal positioning when personnel are on the platform, and only at their request.

8. Ensure the mast is vertical – do not operate on a side slope.

9. The platform is horizontal and never tilted forward or rearward when elevated.

10. Personnel are to remain on the platform floor. The use of railings, planks, ladders, etc., on the platform for the purpose of achieving additional reach or height is prohibited.

11. Ensure personnel and equipment on the platform do not exceed the available space.

12. Lower platform to floor level for personnel to enter and exit. Do not climb on any part of the truck in attempting to enter or exit.

13. The operator shall remain in the control position of the forklift truck.

14. Be certain that the lifting mechanism is operating smoothly throughout its entire lift height, both empty and loaded, and that lift limiting devices and latches, if provided, are functional.

15. Means shall be provided to protect personnel from moving parts of the forklift truck that present a hazard when the personnel platform is in the normal working position.

16. Overhead protection, as necessary for operating conditions, shall be provided.

17. Do not transport personnel from one location to another while they are on the work platform.

18. When not in the operating position, engage the parking brake and block the wheels.

19. Be certain that required restraining means such as railings, chains, cable, body belts with lanyards, or deceleration devices, etc., are in place and properly used.

10.5.3 STANDARD HAND SIGNALS

a. Standard hand signals for use at DOE locations shall be as specified in the latest edition of the ANSI standards for the particular forklift being used (see Figure 10-5).

b. The operator shall recognize signals only from the designated signaler. *However Obey a STOP signal no matter who gives it*.

c. For operations not covered by standard hand signals, special signals shall be agreed on in advance by both the operator and the signal person, and should not conflict with the standard signals.

10.5.4 ORDINARY LIFTS

a. The requirements of all preceding paragraphs in Section 10.5, "Operation," shall also apply to ordinary lifts.

b. Ordinary lifts involving hoisting and rigging operations require a designated leader who shall be present at the lift site during the entire lifting operation. If the lift is being made by only one person, that person assumes all responsibilities of the designated leader.

c. Leadership designation may be by written instructions, specific verbal instructions for the particular job, or clearly defined responsibilities within the crew's organizational structure. The designated leader's responsibility shall include the following:

1. Ensuring that personnel involved understand how the lift is to be performed.

2. Ensuring that the weight of the load is determined, that proper equipment and accessories are selected, and that rated capacity is not exceeded.

3. Surveying the lift site for hazardous/unsafe conditions.

4. Ensuring that equipment is properly set up and positioned.

5. Ensuring that a signaler is assigned, if required, and is identified to the operator.

6. Directing the lifting operation to ensure that the job is performed safely and efficiently.

7. Stopping the job when any potentially unsafe condition is recognized.

8. Directing operations if an accident or injury occurs.

10.5.5 CRITICAL LIFTS

See Chapter 2, "Critical Lifts," for critical-lift requirements.

10.5.6 EQUIPMENT QUALIFICATION

To qualify for operation, a forklift truck should have the following:

a. A record of successful inspections and maintenance.

b. A frequent (preuse) inspection instruction available to the operator.

c. A qualified operator.

d. Proper type designation for working in a classified hazardous area, if applicable.

RAISE THE TINES. With forearm vertical, forefinger pointing up, move hand in small horizontal circle.	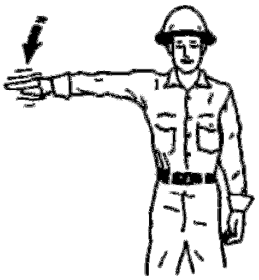 **LOWER THE TINES.** With arm extended, palm down, lower arm vertically.	**TILT MAST BACK**. With forearm vertical, thumb extended, jerk thumb over shoulder.
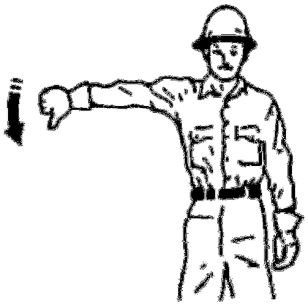 **TILT MAST FORWARD.** With arm extended, thumb down, lower arm vertically.	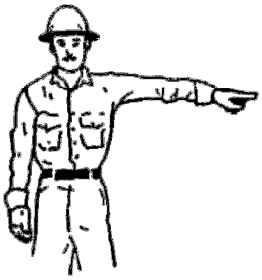 **MOVE TINES IN DIRECTION FINGER POINTS.** With arm extended, palm down, point forefinger in direction of movement.	**DOG EVERYTHING**. Clasp hands in front of body**.**
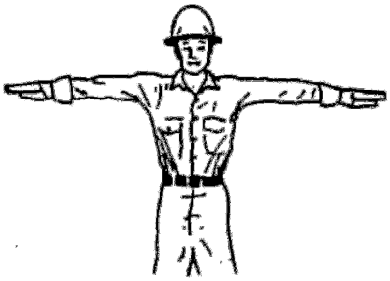 **STOP.** Extend both arms, palms down.		

INTENTIONALLY BLANK

Exhibits I and II are intended to be sample forms only.
The equipment manufacturer's inspection/testing
criteria supercede any other criteria.
In cases where the equipment manufacturer does not include
inspection/testing criteria, other forms developed to facilitate
required inspection/testing are acceptable.

INTENTIONALLY BLANK

EXHIBIT I
(SAMPLE FORM ONLY)

Typical Preuse Inspection Procedures (sheet 1 of 2).
OPERATORS PRE-SHIFT INSPECTION
(ELECTRIC FORKLIFT)

Date: _____ Vehicle No.: _____ Shift: _____
Type and Model _____Hour Meter _____

OK	NA	*VISUAL CHECKS*	Maintenance Needed – Reported to:
		Leaks – Hydraulic Oil, Battery	
		Tires – Condition and pressure	
		Forks, Top Clip retaining pin and heel - Condition	
		Load Backrest Extension – solid attachment	
		Hydraulic hoses, Mast chains & Stops	
		Finger guards – attached	
		Safety warnings – attached and legible	
		Operators manual – Located on truck and legible	
		Capacity Plate – attached; information matches Model & Serial Nos. and attachments	
		Seat Belt – Buckle and retractor working smoothly	
OPERATONAL CHECKS – Unusual Noises Must be Reported Immediately			
		Accelerator Linkage	
		Parking Brake/Deadman	
		Steering	
		Drive Control – Forward and Reverse	
		Tilt Control – Forward and Back	
		Hoist & Lowering Control	
		Attachment Control	
		Horn	
		Lights	
		Back-Up Alarm	
		Hour Meter	
		Battery Discharge Gauge	

Daily Pre-Shift Inspections are an OSHA requirement. We recommend that you document that these inspections have been made.

Inspected by: _____

Custodian:_____

EXHIBIT I
(SAMPLE FORM ONLY)

Typical Preuse Inspection Procedures (sheet 2 of 2).
OPERATORS PRE-SHIFT INSPECTION
(GAS, LP, or DIESEL FORKLIFT)

Date: _____ Vehicle No.: _____ Shift: _____
Type and Model: _____ Hour Meter: _____

OK	NA	*VISUAL CHECKS*	Maintenance Needed – Reported to:
		Fluid Levels – Oil, Radiator, Hydraulic	
		Leaks – Hydraulic Oil, Battery, Fuel	
		Tires – Condition and pressure	
		Forks, Top Clip retaining pin and heel – Condition	
		Load Backrest Extension – solid attachment	
		Hydraulic hoses, Mast chains & Stops	
		Finger guards – attached	
		Safety warnings – attached and legible	
		Operators manual – Located on truck and legible	
		Capacity Plate – attached; information matches Model & Serial Nos. and attachments	
		Seat Belt – Buckle and retractor working smoothly	
OPERATONAL CHECKS – Unusual Noises Must be Reported Immediately			
		Accelerator Linkage	
		Parking Brake	
		Steering	
		Drive Control – Forward and Reverse	
		Tilt Control – Forward and Back	
		Hoist & Lowering Control	
		Attachment Control	
		Horn	
		Lights	
		Back-Up Alarm	
		Hour Meter	

Daily Pre-Shift Inspections are an OSHA requirement. We recommend that you document that these inspections have been made.

Inspected by: _____

Custodian:_____

EXHIBIT II
(SAMPLE FORM)

FORKLIFT LOAD TEST

INSPECTED BY: _____ EQUIPMENT NUMBER: _____

LOCATION: _____ DATE: _____

INSPECTION: Forklifts shall be inspected when assigned to service and at least every 12 months thereafter.

Prior to initial use, all new, modified, or extensively repaired forklifts shall be inspected.

Craftsmen shall initial all tests, work, and inspections completed below.

Qualified inspector shall verify inspections have been complete prior to load test.

CRAFTSMAN INITIAL

_____ 1. Ensure capacity, operation, and maintenance-instruction plates, tags, or decals are legible.

_____ 2. Check all hydraulic systems including tilt cylinders, valves, and other similar parts to ensure "drift" has not developed.

_____ 3. Check fuel system for leaks and condition of parts. Special consideration shall be given in the case of a leak in the fuel system. Immediate action shall be taken to take the forklift out of service until the leak is corrected.

_____ 4. Check all parts of lift and tilt mechanisms and frame members to ensure safe operating conditions, such as, but not limited to, hoist chain for damage and excessive wear.

_____ 5. Check for proper tire inflation (where applicable). Check that tires are secured properly and are level with each other.

_____ 6. Check batteries, motors, controllers, limit switches, protective devices, electrical conductors and connections, with special attention paid to the condition of electrical insulation.

_____ 7. Check brakes, steering mechanisms, warning devices, lights, governors, lift overload devices, guards, and safety devices.

Qualified inspector shall use the criteria for Items 8, 9, and 10 to perform visual examination; or as required by the manufacturer, liquid penetrant examination, or magnetic particle examination. Acceptance: No cracks, linear indications, laps, or seams.

_____ 8. Check for forks being secured properly and level with each other.

_____ 9. Performs nondestructive test (NDT) on the right angle joint of the fork once every 12 months.

_____ 10. Performs NDT on the load or stress-bearing welds that attach the tines to the forklift once every 12 months.

EXHIBIT II (continued)

FORKLIFT LOAD TEST

LOAD TEST

NOTES:

1. Read all steps below prior to load test.
2. Forklifts in which load-sustaining parts have been altered, replaced, or repaired shall be load tested prior to initial use.
3. Load test all forklifts at 100% rated capacity.

QUALIFIED INSPECTOR: Shall verify all steps below.

EQUIPMENT NUMBER _____ EQUIPMENT OPERATOR _____

Qualified Inspector Verify (Load Test) _____ Date _____

Weight _____

1. Set forklift on solid, level ground.
2. Perform load test using the required weight (see Note 3).
3. Static Test: Forklift trucks shall demonstrate ability to withstand the appropriate test load for a period of at least 10 min without permanent deformation or apparent damage. Load slippage for this equipment shall not be greater than a maximum of 3 in. vertically and 1 in. horizontally at the cylinder.
4. Check system for leaks while undergoing test.

CHAPTER 11
WIRE ROPE AND SLINGS

This chapter provides requirements for the fabrication and use of wire rope and slings used in hoisting and rigging and implements the requirements of ASME B30.9, Slings (for latest ASME standards, see http://catalog.asme.org/home.cfm?Category=CS).

.

11.1 GENERAL 11-1

11.2 WIRE ROPE 11-4
- 11.2.1 Wire-Rope Lays 11-4
- 11.2.2 Wire-Rope Cores 11-4
- 11.2.3 Wire Rope for General Purposes 11-4
  - 11.2.3.1 6 x 19 Classification 11-4
  - 11.2.3.2 6 x 37 Classification 11-5
- 11.2.4 Wire-Rope Inspections 11-5
- 11.2.5 Wire-Rope Maintenance 11-5

11.3 SLINGS 11-8
- 11.3.1 General 11-8
  - 11.3.1.1 Load Angle Factor 11-8
  - 11.3.1.2 Safe Load 11-8
  - 11.3.1.3 Design Factor 11-10
  - 11.3.1.4 Sling Care 11-10
  - 11.3.1.5 Sling Storage 11-10
  - 11.3.1.6 Inspections 11-10
  - 11.3.1.7 Sling Periodic Inspection Records 11-10
- 11.3.2 Wire-Rope Slings 11-10
  - 11.3.2.1 Removal from Service Criteria 11-20
  - 11.3.2.2 Proof-Testing 11-20
  - 11.3.2.3 Operation 11-20
  - 11.3.2.4 Critical Lifts 11-24
- 11.3.3 Alloy Steel-Chain Slings 11-25
  - 11.3.3.1 Removal from Service Criteria 11-25
  - 11.3.3.2 Proof-Testing 11-26
  - 11.3.3.3 Operation 11-28
  - 11.3.3.4 Critical Lifts 11-29
- 11.3.4 Metal-Mesh Slings 11-29
  - 11.3.4.1 Removal from Service Criteria 11-32
  - 11.3.4.2 Proof-Testing 11-32
  - 11.3.4.3 Operation 11-32
  - 11.3.4.4 Critical Lifts 11-33
- 11.3.5 Synthetic-Web Slings 11-33
  - 11.3.5.1 Removal from Service Criteria 11-36
  - 11.3.5.2 Proof-Testing 11-36
  - 11.3.5.3 Operation 11-40
  - 11.3.5.4 Critical Lifts 11-40
- 11.3.6 Synthetic Roundslings 11-40
  - 11.3.6.1 Removal from Service Criteria 11-41
  - 11.3.6.2 Proof-Testing 11-42
  - 11.3.6.3 Operation 11-42
  - 11.3.6.4 Critical Lifts 11-43

INTENTIONALLY BLANK

11.1 GENERAL

a. The information in this section provides guidance for safely handling lifted loads. Diagrams are used to illustrate hoisting and rigging principles and good and bad rigging practices. This is not a rigging textbook; the information should be applied only by qualified riggers.

b. Wire rope and slings that have been irreversibly damaged or removed from service shall be made unusable for hoisting and rigging operations before being discarded.

c. Load tables are representative only and are not exact for all materials or all manufacturers.

d. Prior to rigging a load, determine the weight of the load:

   1. From markings on the load.

   2. By weighing, if the load is still on a truck or railroad car.

   3. From drawings or other documentation.

   4. By calculation, using the load dimensions and the weights of common materials in Table 11-1.

e. Determine the center of gravity of the load as accurately as possible:

   1. From drawings or other documentation.

   2. From markings on the load.

   3. By calculation.

f. Determine the best method to attach the load and select the appropriate lifting devices (e.g., wire-rope, steel-chain, metal-mesh, or synthetic-web slings).

g. Bending a wire rope over a fixed object such as a pin or a shackle has an effect on the capacity of the rope: the outside wires and strands of a bend have to stretch farther and therefore take a greater percentage of the load.

h. There is a convenient method for estimating the efficiency of the rope as it passes over the bend. This method uses the ratio (R) of the diameter (D) of the object (sheave, pin, corner) about which the wire rope is being bent to the diameter (d) of the rope. The efficiency of the bend can then be estimated using the formula shown in Figure 11-1. Note that the efficiency decreases quickly as the ratio of the diameters decreases.

i. Aside from efficiency, there are other reasons to avoid sharp bends in wire rope including physical damage to the rope, reduction of service life, and damage to the object about which the rope is bent.

j. When the ratio of the diameter of the bend to the nominal rope diameter (D/d ratio) is small, the strength efficiency factor is lower than when the D/d ratio is relatively large. Load tables do not take into account such factors as abnormal temperatures, excessive corrosion, and vibration.

k. Determine the appropriate ratings of the device to be used, allowing for:

   1. *The number of sling legs* – Note that a sling leg completely doubled back on itself constitutes two sling legs.

   2. *The angle between the horizontal surface of the load and the sling leg* – The smaller the angle, the smaller the lifting capacity of the equipment

   3. *Wear* – The reduction in strength of the equipment due to normal wear.

l. The working load limit (WLL) of wire ropes and slings shall not be exceeded in their as configured application.

Table 11-1. Weights of Common Materials.

Name of Metal	Weight (lb/ft^3)	Name of Metal	Weight (lb/ft^3
Aluminum	166	Bluestone	160
Antimony	418	Brick, pressed	150
Bismuth	613	Brick, common	125
Brass, cast	504	Cement, Portland (packed)	100-120
Brass, rolled	523	Cement, Portland (loose)	70-90
Copper, cast	550	Cement, slag (packed)	80-100
Copper, rolled	555	Cement, slag (loose)	55-75
Gold, 24-carat	1,204	Chalk	156
Iron, Cast	450	Charcoal	15-34
Iron, wrought	480	Cinder concrete	110
Lead, commercial	712	Clay, ordinary	120-150
Mercury, 60 degrees F	846	Coal, hard, solid	93.5
Silver	655	Coal, hard, broken	54
Steel	490	Coal, soft, solid	84
Tin, cast	458	Coal, soft, broken	54
Uranium	1,163	Coke, loose	23-32
Zinc	437	Concrete or stone	140-155
		Earth, rammed	90-100
Name of wood		Granite	165-170
		Gravel	117-125
Ash	35	Lime, quick (ground loose)	53
Beech	37	Limestone	170
Birch	40	Marble	164
Cedar	22	Plaster of paris (cast)	80
Cherry	30	Sand	90-106
Chestnut	26	Sandstone	151
Cork	15	Shale	162
Cypress	27	Slate	160-180
Ebony	71	Terra-cotta	110
Elm	30	Traprock	170
Fir, Balsam	22	Water	65
Hemlock	31		
Maple, Oak	62		
Pine, Poplar	30		

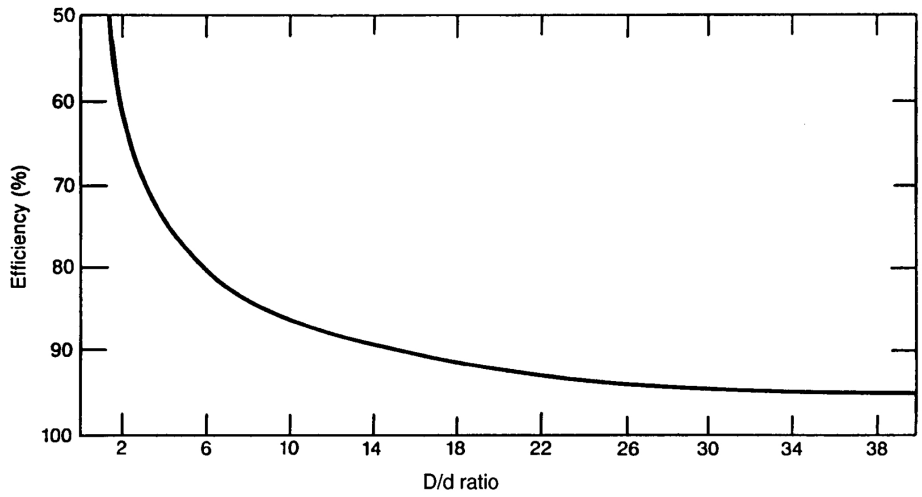

$$\text{Ratio} = R = \frac{\text{diameter of pin or sheave}}{\text{nominal diameter of rope}} = \frac{D}{d}$$

Figure 11-1. Efficiency of wire rope when bent and statically loaded to destruction over sheaves and pins of various diameters.

11.2 WIRE ROPE

11.2.1 WIRE-ROPE LAYS

a. In a right-lay rope, the strands twist to the right around the core like a conventional screw thread; in a left-lay rope, the strands twist to the left.

b. A rope has a lang lay when the strands and the individual wires have the same lay direction. When the strands and the wires have an opposite lay direction, the rope has a regular lay.

c. A standard wire rope, unless otherwise stated, is understood to be right regular lay. With few exceptions, all wire rope is made right lay. Left-lay rope is a special-purpose rope.

d. Figure 11-2 shows ropes with right and left lays combined with regular and lang lays.

e. Lay length is the lengthwise distance measured along a wire rope in which a strand makes one complete revolution about the rope's axis.

11.2.2 WIRE-ROPE CORES

a. Wire rope consists of multistrand metal wires wrapped around a suitable core material. Wire-rope cores are carefully designed and must be precisely manufactured to close tolerances to ensure a perfect fit in the rope. The most common types of cores include the following (see Figure 11-3):

1. Fiber Core (FC) or Sisal Core – Sisalanna is the most common fiber that is used in the manufacture of wire-rope cores. In smaller ropes, cotton and jute are sometimes used for the core.

2. Independent Wire-Rope Core (IWRC) – The primary function of the core is to provide adequate support for the strands. As the name implies, an IWRC is a separate small-diameter wire rope that is used as the core for a larger wire rope. When severe crushing or flattening of the rope is encountered, an IWRC is usually specified.

3. Strand Core – This type of core has a single strand used as the core. This type is generally confined to the smaller ropes as a substitute for IWRC. The strand core may or may not have the same cross section as the surrounding strands.

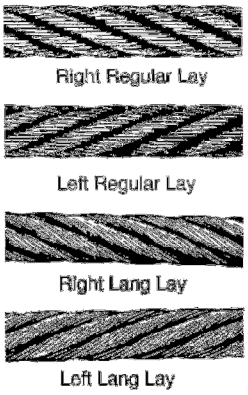

Figure 11-2. Wire-Rope lays.

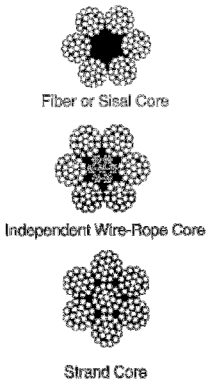

Figure 11-3. Wire-rope cores.

-

11.2.3 WIRE ROPE FOR GENERAL PURPOSES

11.2.3.1 6 x 19 Classification

a. Most applications can use a rope from this classification; it is the most versatile of all ropes made. Figure 11-4 shows four varieties of 6 x 19 wire ropes with FCs and IWRCs. Table 11-2 provides breaking strengths for 6 x 19 wire ropes with FC and IWRC cores.

b. The principle types of ropes in this classification include:

1. 6 x 19F – The most popular and versatile of all wire ropes and the most flexible is the 6 x 19F classification. This rope is considered the perfect compromise between maximum abrasion resistance and maximum flexibility.

2. 6 x 16F – Slightly more abrasion resistant than the 6 x 19F, the 6 x 16F makes an excellent rope for small draglines and similar uses. The resistance to wear is gained by a slight sacrifice in flexibility.

3. 6 x 19 Seale – The 6 x 19 Seale is a rugged wire rope for applications involving heavy wear. Car pullers often use this rope, and it is widely used for slushers and drag scrapers.

4. 6 x 19 Warrington – The alternating large and small outer wires make this rope an all-around performer. The 6 x 19 Warrington is used for general-purpose hoisting, churn drills, and miscellaneous slings.

11.2.3.2 6 x 37 Classification

a. When sheaves and drums are fairly small and abrasive conditions are not severe, the ropes in this classification will show better performance than the coarser 6 x 19 construction. Under conditions of repeated bending, they will outlast a 6 x 19 rope; when abrasion is severe, the small outer wires quickly show the effect. Figure 11-5 show three varieties of 6 x 37 wire rope with FC and IWRC cores. Table 11-3 provides breaking strengths for 6 x 37 wire ropes with FC and IWRC cores.

b. The principal types of ropes in this classification include:

1. 6 x 37 2-operation – A 6 x 37 2-operation strand has 18 outer wires. This construction is used on industrial equipment, for flexible slings, and in miscellaneous hoisting.

2. 6 x 29F – A 6 x 29F is used for applications requiring a flexible rope slightly more resistant to wear than the 6 x 37 2-operation rope.

3. 6 x 41 – A 6 x 41 rope is used widely for ropes over 1-in. diameter in the 6 x 37 classification.

11.2.4 WIRE-ROPE INSPECTIONS

A qualified inspector shall inspect wire ropes at least annually. Inspection requirements vary depending on what type of equipment the wire ropes are used on. Refer to other sections in this standard, based on the equipment being used, for specific inspection requirements.

11.2.5 WIRE-ROPE MAINTENANCE

Personnel using wire rope shall ensure proper care by doing the following:

a. Store rope to prevent damage or deterioration.

b. Unreel or uncoil rope as recommended by the rope manufacturer or a qualified person and with care to avoid kinking or inducing a twist.

c. Before cutting a rope, use some method to prevent unlaying of the strands. Heat-affected zones of flame cut wire rope shall not be allowed to bear load.

d. During installation, avoid dragging the rope in the dirt or around objects that will scrape, nick, crush, or induce sharp bends.

e. Unless prohibited by other considerations, maintain rope in a well-lubricated condition. The object of rope lubrication is to reduce internal friction and to prevent corrosion. Ensure that lubricant applied as part of a maintenance program is compatible with the original lubricant and is also a type that does not hinder visual inspection. Those sections of rope in contact with sheaves or otherwise hidden during inspection and maintenance procedures require special attention when lubricating rope.

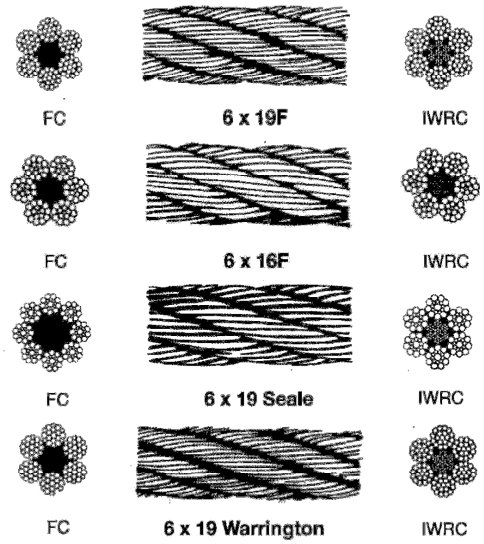

Figure 11-4. 6 x 19 classification of wire rope.

Table 11-2. Breaking strength of wire rope (6 x 19 classification).

Rope diameter (in.)	Weight (lb. per ft.)	Breaking strength in tons of 2,000 lb.		Rope diameter (in.)	Weight (lb. per ft.)	Breaking strength in tons of 2,000 lb.	
		Plow steel	Improved plow steel			Plow steel	Improved plow steel
3/16	0.06	1.3	1.5	3/16	0.07	1.4	1.6
¼	0.10	2.4	2.7	¼	0.11	2.6	2.9
5/16	0.16	3.8	4.1	5/16	0.18	4.1	4.4
3/8	0.23	5.4	6.0	3/8	0.25	5.8	6.5
7/16	0.31	7.0	8.0	7/16	0.34	7.5	8.6
½	0.40	10.0	11.0	½	0.44	10.8	11.8
9/16	0.51	11.7	13.3	9/16	0.56	12.6	14.3
5/8	0.63	15.0	16.5	5/8	0.69	16.1	17.7
¾	0.90	21.5	23.8	¾	0.99	23.1	25.6
7/8	1.23	28.3	32.0	7/8	1.35	30.4	34.4
1	1.60	38.0	41.7	1	1.76	40.8	44.8
1 1/8	2.03	48.5	53.0	1 1/8	2.23	52.1	57.0
1 ¼	2.50	60.0	65.0	1 ¼	2.75	64.5	70.4
1 3/8	3.03	73.5	81.0	1 3/8	3.33	79.0	87.1
1 ½	3.60	88.5	96.0	1 ½	3.96	95.1	103.0
1 5/8	4.23	103.0	113.0	1 5/8	4.65	111.0	122.0
1 ¾	4.90	119.0	130.0	1 ¾	5.39	128.0	140.0
1 7/8	5.63	138.0	152.0	1 7/8	6.19	148.0	163.0
2	6.40	154.0	169.0	2	7.04	166.0	182.0
2 ¼	8.10	193.0	210.0	2 ¼	8.91	208.0	226.0
2 ½	10.00	235.0	260.0	2 ½	11.00	253.0	280.0
2 ¾	12.10	280.0	305.0	2 ¾	13.30	301.0	328.0

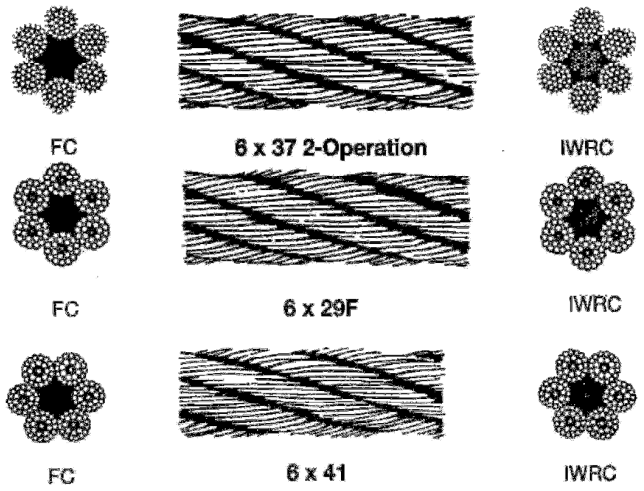

Figure 11-5. 6 x 37 classification of wire rope.

Table 11-3. Breaking strength of wire rope (6 x 37 classification).

Rope diameter (in.)	Weight (lb. per ft.)	Breaking strength in tons of 2,000 lb.		Rope diameter (in.)	Weight (lb. per ft.)	Breaking strength in tons of 2,000 lb.	
		Plow steel	Improved plow steel			Plow steel	Improved plow steel
¼	0.10	2.2	2.5	¼	0.11	2.4	2.7
5/16	0.16	3.8	4.0	5/16	0.18	4.1	4.3
3/8	0.22	5.0	5.5	3/8	0.24	5.4	5.9
7/16	0.30	6.9	7.5	7/16	0.33	7.4	8.1
½	0.39	9.2	10.0	½	0.43	9.9	10.8
9/16	0.49	11.4	12.5	9/16	0.54	12.3	13.4
5/8	0.61	14.5	16.0	5/8	0.67	15.6	17.2
¾	0.87	20.2	22.2	¾	0.96	21.7	23.9
7/8	1.19	27.5	30.2	7/8	1.30	29.6	32.5
1	1.55	36.0	39.5	1	1.1	38.7	42.5
1 1/8	1.96	44.0	49.0	1 1/8	2.16	47.3	52.7
1 ¼	2.42	55.0	61.0	1 ¼	2.66	59.1	65.6
1 3/8	2.93	68.5	74.5	1 3/8	3.22	73.6	80.1
1 ½	3.49	82.0	90.0	1 ½	3.84	88.1	96.7
1 5/8	4.09	96.5	105.5	1 5/8	4.50	104.0	113.0
1 ¾	4.75	110.0	121.0	1 ¾	5.23	118.0	130.0
1 7/8	5.45	129.0	142.0	1 7/8	6.00	139.0	153.0
2	6.20	142.0	155.0	2	6.82	153.0	167.0
2 ¼	7.85	182.0	201.0	2 ¼	8.64	196.0	216.0
2 ½	9.69	225.0	245.0	2 ½	10.66	242.0	263.0
2 ¾	11.72	269.0	293.0	2 ¾	12.89	289.0	315.0
3	13.95	323.0	353.0	3	15.35	347.0	379.0

11.3 SLINGS

11.3.1 GENERAL

a. Slings shall have a minimum design factor appropriate to the type of material as specified in the appropriate section. Features that affect the rated capacity of the sling and that shall be considered in calculating the design factor are:

   1. Nominal breaking strength of material from which it is constructed.

   2. Splicing or end-attachment.

   3. Number of parts in the sling.

   4. Type of hitch (e.g., straight pull, choker hitch, or basket hitch).

   5. Angle of loading and load center of gravity.

   6. Diameter of curvature around which the sling is bent.

b. The center of gravity of an object is a point around which the entire weight may be concentrated. To make a level lift, the crane hook or point of suspension must be directly above this point. While slight variations are usually permissible, if the crane hook is too far to one side of the center of gravity, dangerous tilting will result and should be corrected at once. For this reason, when the center of gravity is closer to one point of the sling attachment than to the other, the slings must be of unequal length. Sling stresses and sling angles will also be unequal (see Figure 11-6).

c. Rigging shall be configured such that slings do not reeve or slip through the hook. To attach the load, locate the center of gravity, position the crane hook directly above the center of gravity, and then rig the load so that it will lift level and true.

11.3.1.1 Load Angle Factor

a. The following is an example of selecting a sling using the load angle factors shown in Figure 11-7.

   1. Load = 1,000 lb.

   2. Sling = 2-legged bridle.

   3. Angle with horizontal = 45 degrees.

   4. Load angle factor from Figure 11-7 = 1.414

b. Each of the two legs would lift 500 lb if a vertical lift were made. However, there is a 45 sling angle involved. Therefore, the 500-lb load would be multiplied by the load-angle factor in the chart, giving a total of 707 lb (500 lb x 1.414) tension in each sling leg. Each sling leg, therefore, must have a rated capacity of at least 707 lb.

11.3.1.2 Safe Load

a. The rated capacity or working load limit (WLL) of a sling varies depending on the type of hitch. The rated capacity tables in this section show the applications for which the various safe loads apply when the slings are new. All ratings are in pounds (lbs).

b. Figures 11-8 and 11-9 provide information for determining the total rated capacity of 3-leg slings so as not to introduce a working load in direct tension in any leg greater than that permitted. Two legs should be considered to carry the load because in normal lifting practice, the load will not be uniformly distributed on all legs. If rigging techniques, verified by a qualified rigger, ensure that the load is evenly distributed then full use of three legs is allowed. Special rigging techniques verified by a qualified engineer shall be required to prove that a load is evenly distributed over four or more sling legs.

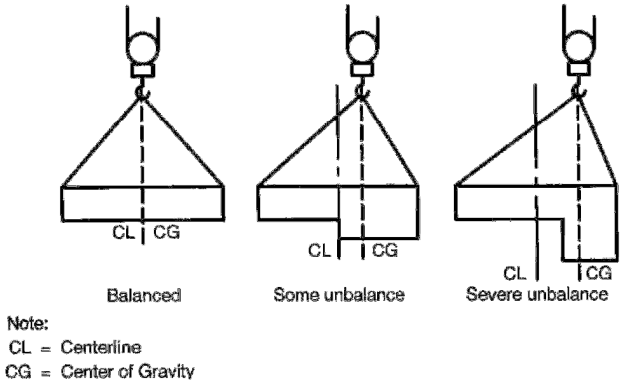

Figure 11-6. Balancing Loads

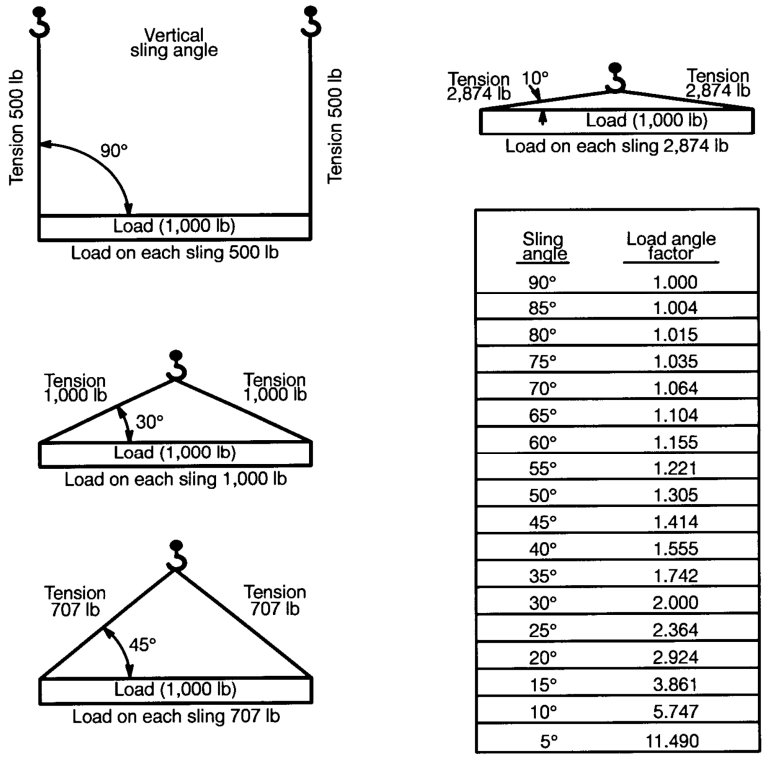

Sling angle	Load angle factor
90°	1.000
85°	1.004
80°	1.015
75°	1.035
70°	1.064
65°	1.104
60°	1.155
55°	1.221
50°	1.305
45°	1.414
40°	1.555
35°	1.742
30°	2.000
25°	2.364
20°	2.924
15°	3.861
10°	5.747
5°	11.490

Figure 11-7. Relationship of load angle and lifting efficiency.

11.3.1.3 Design Factor

In general, a design factor of 5:1 is maintained throughout this section with the exception of alloy steel chain slings. Also, certain sling fittings, such as hooks (which will deform beyond usefulness before breaking) cannot be assigned a definite numerical design factor. In such cases, suitable safe loads are listed, based on wide experience and sound engineering practice.

11.3.1.4 Sling Care

Proper care and usage are essential for maximum service and safety. Wire-rope slings shall be protected from sharp bends and cutting edges by means of corner saddles, burlap padding, or wood blocking. Overloading shall be avoided, as shall sudden dynamic loading that can build up a momentary overload sufficient to break the sling.

11.3.1.5 Sling Storage

Personnel using slings shall ensure that they are stored properly as follows:

a. Slings should be stored in racks (preferably vertical) and in designated locations when not in use. Do not store slings in a location where they will be subjected to mechanical damage, corrosive action, moisture, extreme heat, or kinking. Slings may require segregated storage as determined on a case-by-case basis.

b. Before storage and periodically during storage, wipe slings clean to remove as much dirt and abrasive grit as possible and relubricate wire rope and chain slings to extend their useful life. Chains should not be lubricated when in use.

c. Do not store metal-mesh slings in areas where the temperature exceeds 550 degrees F (288 degrees C) or 200 degrees F (93 degrees C) if elastomer covered.

d. Do not store synthetic-web slings where the temperature exceeds 200 degrees F (93 degrees C).

11.3.1.6 Inspections

a. Sling users shall visually inspect all slings each day they are used or prior to use if the sling has not been in regular service (records are not required). In addition, a periodic inspection shall be made at least annually by a qualified inspector. More frequent intervals for periodic inspections should be established if necessary as determined by a qualified person based upon:

    1. Frequency of sling use.

    2. Severity of service conditions.

    3. Nature of lifts being made.

    4. Experience gained on the service life of slings used in similar circumstances.

b. Users shall carefully note any deterioration that could result in an appreciable loss of original strength and determine whether further use of the sling would constitute a safety hazard. Removal from service criteria are provided for each type of sling in their respective sections.

11.3.1.7 Sling Periodic Inspection Records

Individual site programs shall describe how inspections are recorded. These records may include an external coded mark on the individual sling tag (e.g. date, annually changed color stripe, etc.) indicating both periodicity and the satisfactory completion of the required inspection, or a written record as acceptable documentation.

11.3.2 WIRE-ROPE SLINGS

a. In general, wire-rope slings are made up of 6 x 19 or 6 x 37 classification wire rope. Rotation-resistant wire rope shall not be used for wire-rope slings. Different kinds of slings have been developed for specific purposes. These are divided into different groups or types as follows:

    1. Endless-loop slings (grommet construction) and single-part slings with single-rope legs, double-rope legs, or multiple-part rope legs.

2. Two-leg bridle slings with single-rope legs, equalizing double-rope legs, or multiple-part tope legs.

3. Three-leg bridle slings.

4. Four-leg bridle slings.

5. Special slings and combinations.

b. The total load that can be safely lifted with slings depends on the rating of the slings and the manner in which they are attached to the load. Consult Tables 11-4 through 11-9 and Figure 11-10.

c. Braided slings are made by braiding ordinary wire ropes together, thus making them more flexible than wire-rope slings. The size of a braided sling is determined by the diameter of one wire rope and the number of ropes in the cross section of the slings.

d. The design factor for wire-rope slings shall be a minimum of 5:1 based upon breaking strength.

e. When a wire rope sling is used in a choker hitch, the normal angle formed in the rope body as it passes through the choking eye is 120 degrees or greater [do not confuse the choke angle with the angle of inclination of the load (see Figure 11-10)]. Rated load in load capacity Tables 11-4 through 11-9 are for angles of 120 degrees or greater. For smaller angles, reduce the rated load to the percentages given in Figure 11-10.

When legs are not of equal length, use smallest H/L ratio

NOTE: Load may be supported on only 2 legs while 3rd leg balances it. Therefore, the required SWL is determined by the following:

Total Rated Capacity = WLL (of single vertical hitch) x H/L x 2

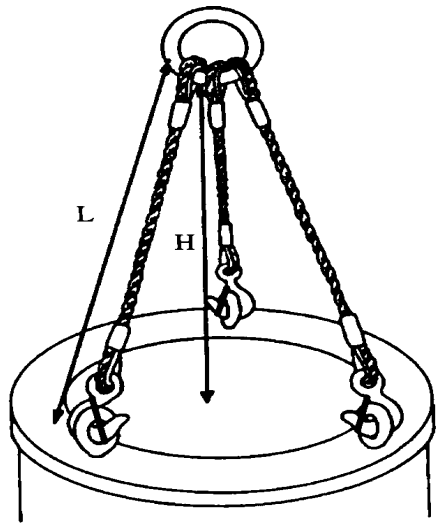

Figure 11-8. Determination of capacity – 3-leg bridle sling.

When legs are not of equal length, use smallest H/L ratio.

NOTE: Load may be carried by only 2 legs while other 2 legs balance it. Therefore, the required SWL is determined by the following:

Total Rated Capacity = WLL (of single vertical hitch) x H/L x 2

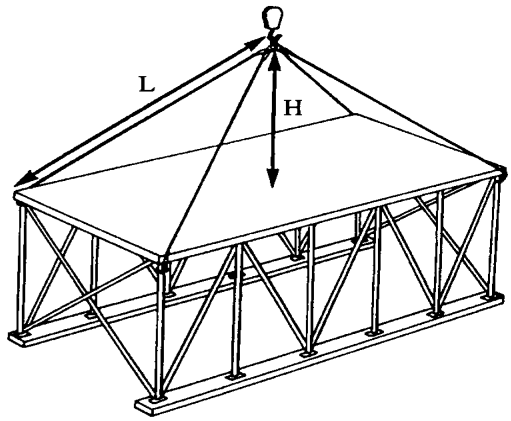

Figure 11-9. Determination of capacity – 4-leg bridle sling.

Table 11-4. Load capacity of wire-rope slings.
Hand tuck splice (IWRC) in pounds Design Factor = 5:1

Dia. in inches	Vertical	Choker	Basket or two legs				Dia. in inches
¼	1,100	820	2,200	1,800	1,500	1,100	¼
5/16	1,600	1,280	3,200	2,800	2,200	1,600	5/16
3/8	2,400	1,840	4,800	4,000	3,200	2,400	3/8
7/16	3,000	2,400	6,000	5,400	4,400	3,000	7/16
½	4,000	3,200	8,000	6,800	5,600	4,000	½
9/16	5,000	4,000	10,000	8,600	7,000	5,000	9/16
5/8	6,000	5,000	12,000	10,400	8,400	6,000	5/8
¾	8,400	7,200	16,800	14,600	11,800	8,400	¾
7/8	11,000	9,600	22,000	19,200	15,600	11,000	7/8
1	14,000	12,600	28,000	24,000	20,000	14,000	1
1 1/8	18,000	15,800	36,000	32,000	26,000	18,000	1 1/8
*1 ¼	22,000	19,400	44,000	36,000	30,000	22,000	*1 ¼
*1 3/8	26,000	24,000	52,000	44,000	36,000	26,000	*1 3/8
*1 ½	32,000	28,000	64,000	52,000	42,000	32,000	*1 ½
*1 5/8	36,000	32,000	72,000	62,000	50,000	36,000	*1 5/8
*1 ¾	42,000	38,000	84,000	70,000	58,000	42,000	*1 ¾
*2	56,000	48,000	112,000	92,000	74,000	56,000	*2
Wire Rope/6 x 19 and *6 x 37 IPS IWRC							

Notes:

(1) These values only apply when the D/d ratio is 25 or greater (choker and basket hitches)

D = Diameter of curvature around which the body of the sling is bent

d = Diameter of rope

(2) Choker hitch values apply only to choke angles greater than 120 degrees.

Table 11-5. Load capacity of wire-rope slings.
Hand tuck splice (Fiber Core) in pounds Design Factor = 5:1

Dia. in inches	Vertical	Choker	Basket or two legs				Dia. in inches
¼	980	760	1,960	1,700	1,400	980	¼
5/16	1,500	1,200	3,040	2,600	2,200	1,500	5/16
3/8	2,200	1,700	4,400	3,600	3,000	2,200	3/8
7/16	2,800	2,400	5,600	5,000	4,000	2,800	7/16
½	3,600	3,000	7,200	6,400	5,200	3,600	½
9/16	4,600	3,800	9,200	8,000	6,400	4,600	9/16
5/8	5,600	4,600	11,200	9,600	8,000	5,600	5/8
¾	7,800	6,600	15,600	13,600	11,000	7,800	¾
7/8	10,400	9,000	20,080	17,800	14,600	10,400	7/8
1	13,400	11,800	26,800	22,000	18,800	13,400	1
1 1/8	16,800	14,800	33,600	28,000	24,000	16,800	1 1/8
*1 ¼	20,000	18,000	40,000	34,000	28,000	20,000	*1 ¼
*1 3/8	24,000	22,000	48,000	42,000	34,000	24,000	*1 3/8
*1 ½	30,000	26,000	60,000	52,000	42,000	30,000	*1 ½
*1 5/8	34,000	30,000	68,000	58,000	48,000	34,000	*1 5/8
*1 ¾	40,000	34,000	80,000	70,000	56,000	40,000	*1 ¾
*2	52,000	44,000	104,000	90,000	74,000	52,000	*2
Wire Rope/6 x 19 and *6 x 37 IPS FC							

Notes:

(1) These values only apply when the D/d ratio is 25 or greater (choker and basket hitches)

D = Diameter of curvature around which the body of the sling is bent

d = Diameter of rope

(2) Choker hitch values apply only to choke angles greater than 120 degrees.

Table 11-6. Load capacity of wire-rope slings.
Mechanical splice (IWRC) in pounds Design Factor = 5:1

Dia. in inches	Vertical	Choker	Basket or two legs				Dia. in inches
¼	1,100	840	2,200	1,940	1,580	1,100	¼
5/16	1,700	1,300	3,400	3,000	2,400	1,700	5/16
3/8	2,400	1,860	4,800	4,200	3,600	2,400	3/8
7/16	3,400	2,500	3,800	5,800	4,800	3,400	7/16
½	4,400	3,200	8,800	7,600	6,200	4,400	½
9/16	5,500	4,200	11,000	9,600	7,700	5,500	9/16
5/8	6,800	5,000	13,600	11,800	9,600	6,800	5/8
¾	9,700	7,200	19,400	16,800	13,600	9,700	¾
7/8	13,000	9,800	26,000	22,000	18,300	13,000	7/8
1	17,000	12,800	34,000	30,000	24,000	17,000	1
1 1/8	20,000	15,600	40,000	36,000	30,000	20,000	1 1/8
*1 ¼	25,000	18,400	50,000	42,000	34,000	25,000	*1 ¼
*1 3/8	30,000	24,000	60,000	52,000	42,000	30,000	*1 3/8
*1 ½	36,000	28,000	72,000	64,000	50,000	32,000	*1 ½
*1 5/8	42,000	32,000	84,000	70,000	58,000	42,000	*1 5/8
*1 ¾	50,000	38,000	100,000	82,000	66,000	50,000	*1 ¾
*2	64,000	48,000	128,000	106,000	86,000	64,000	*2

Notes:

(1) These values only apply when the D/d ratio is 25 or greater (choker and basket hitches)

D = Diameter of curvature around which the body of the sling is bent

d = Diameter of rope

(2) Choker hitch values apply only to choke angles greater than 120 degrees.

Table 11-7. Load capacity of wire-rope slings.
8-part braided rope in pounds Design Factor = 5:1

Dia. in inches	Vertical	Choker	Basket or two legs			Dia. in inches
*1/8	1,900	1,400	3,200	2,600	1,900	*1/8
*3/16	4,200	3,000	7,200	5,800	4,200	*3/16
3/16	3,400	2,600	6,000	4,800	3,400	3/16
¼	6,200	4,600	10,600	8,600	6,200	¼
5/16	9,600	7,200	16,600	13,400	9,600	5/16
3/8	13,600	10,200	24,000	19,400	13,600	3/8
7/16	18,000	13,800	32,000	26,000	18,600	7/16
1/2	24,000	18,000	42,000	34,000	24,000	1/2
9/16	30,000	22,000	52,000	42,000	30,000	9/16
5/8	38,000	28,000	64,000	52,000	38,000	5/8
¾	54,000	40,000	92,000	76,000	54,000	¾
7/8	72,000	54,000	124,000	102,000	72,000	7/8
1	94,000	70,000	162,000	132,000	94,000	1
Wire Rope/6 x 19 IPS and *7 x 7 Galvanized Aircraft Grade						

Notes:

(1) These values only apply when the D/d ratio is 25 or greater (choker and basket hitches)

D = Diameter of curvature around which the body of the sling is bent

d = Diameter of rope

(2) Choker hitch values apply only to choke angles greater than 120 degrees.

Table 11-8. Load capacity of wire-rope slings.
Cable laid grommet-hand tucked in pounds Design Factor = 5:1

Dia. in inches	Vertical	Choker	Basket or two legs	60 degrees	45 degrees	30 degrees	Dia. in inches
*3/8	2,600	1,900	5,000	4,400	3,600	2,600	*3/8
*9/16	5,600	4,200	11,200	9,800	8,000	5,600	*9/16
*5/8	7,800	6,000	15,800	13,600	11,200	6,800	*5/8
¾	10,200	7,600	20,000	17,600	14,400	10,200	¾
15/16	15,800	11,800	32,000	28,000	22,000	15,800	15/16
1 1/8	22,000	16,800	44,000	38,000	32,000	22,000	1 1/8
1 5/16	30,000	22,000	60,000	52,000	42,000	30,000	1 5/16
1 ½	38,000	28,000	78,000	66,000	54,000	38,000	1 ½
1 11/16	48,000	36,000	98,000	84,000	68,000	48,000	1 11/16
1 7/8	60,000	44,000	120,000	104,000	84,000	60,000	1 7/8
2 ¼	84,000	62,000	168,000	146,000	118,000	84,000	2 ¼
2 5/8	112,000	84,000	224,000	194,000	158,000	112,000	2 5/8
3	144,000	108,000	286,000	248,000	202,000	144,000	3
Wire Rope/*7 x 6 x 7 and 7 x 6 x 19 IPS IWRC							

Notes:

(1) These values only apply when the D/d ratio is 10 or greater (choker and basket hitches)

D = Diameter of curvature around which the body of the sling is bent

d = Diameter of rope

(2) Choker hitch values apply only to choke angles greater than 120 degrees.

Table 11-9. Load capacity of wire-rope slings.
Strand laid grommet-hand tucked in pounds Design Factor = 5:1

Dia. in inches	Vertical	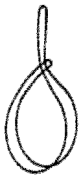 Choker	Basket or two legs	60 degrees	45 degrees	30 degrees	Dia. in inches
¼	1,840	1,320	3,600	3,200	2,600	1,840	¼
3/8	4,000	3,000	8,000	7,000	5,800	4,000	3/8
½	7,000	5,200	14,000	12,200	10,000	7,000	½
5/8	10,800	8,000	22,000	18,800	15,200	10,800	5/8
¾	15,200	11,400	30,000	26,000	22,000	15,200	¾
7/8	20,000	15,200	40,000	34,000	28,000	20,000	7/8

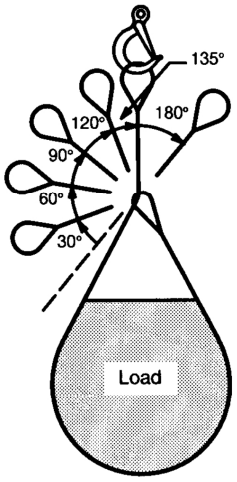

Angle of choke in degrees	Rated capacity IWRC and FC rope percent **
Over 120	100
90–120	87
60–89	74
30–59	62
0–29	49

**Percent of sling rated capacity in a choker hitch

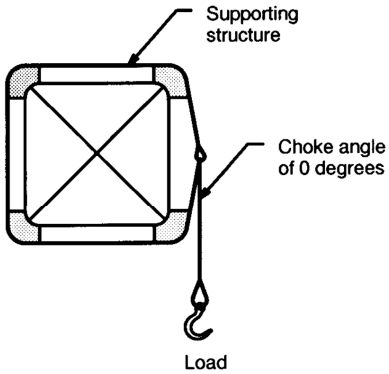

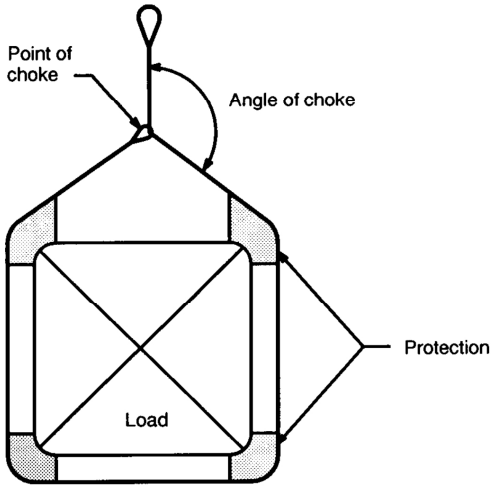

Angle of choke

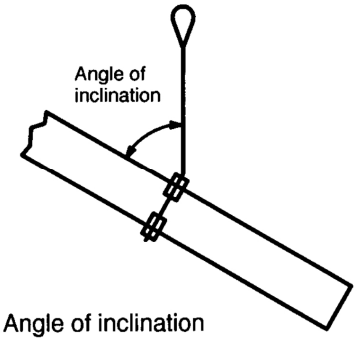

Angle of inclination

Reprinted from ASME B30.9-2006 by permission of The American Society of Mechanical Engineers. All rights reserved.

Figure 11-10. Choker hitch rated capacity adjustment.

11.3.2.1 Removal from Service Criteria

a. Wire rope slings shall be immediately removed from service if any of the following conditions are present:

1. Missing or illegible sling identification

2. Broken wires

   i. For strand-laid and single-part slings, ten randomly distributed broken wires in one rope lay, or five broken wires in one strand in one rope lay.

   ii. For cable-laid slings, 20 broken wires per lay.

   iii. For six-part braided slings, 20 broken wires per braid.

   iv. For eight-part braided slings, 40 broken wires per braid

3. Severe localized abrasion or scraping

4. Kinking, crushing, birdcaging, or any other damage resulting in damage to the rope structure

5. Evidence of heat damage

6. End attachments that are cracked, deformed, or worn to the extent that the strength of the sling is substantially affected

7. Severe corrosion of the rope, end attachments, or fittings

8. For hooks, removal criteria as stated in Section 12.2.

9. Other conditions, including visible damage, that cause doubt as to the continued use of the sling

11.3.2.2 Proof-Testing

a. All swaged socket and poured socket sling assemblies shall be proof-tested to the wire rope or fitting manufacturer's recommendations but in no case greater than 50 percent of the component wire rope's or structural strand's nominal strength. All other sling assemblies shall be proof-tested when specified by the purchaser.

b. As a minimum, the proof load shall be equal to the rated capacity but shall not exceed:

   1. 125 percent of the vertical rated capacity for single-let, hand-tucked slings.

   2. 200 percent of the vertical rated capacity for mechanical-splice single-leg slings and endless slings.

c. The proof-load for multiple-leg bridle slings assemblies shall be applied to the individual leg and shall be in accordance with paragraph a. and b. as applicable.

d. Master links to which multiple-leg slings are connected shall be proof-loaded to 200 percent times the force applied by the combined legs.

e. Welded end attachments shall not be used unless proof-tested at 2 times rated capacity prior to initial use.

f. Test loads described above shall be accurate to within –5 percent, +0 percent of stipulated values. A written letter of certification by the manufacturer or a pull test witnessed and certified in writing by a qualified person is acceptable.

11.3.2.3 Operation

a. The following shall apply to all personnel who use wire-rope slings:

   1. Start and stop slowly; sudden starts and stops dramatically increase the stresses in hoist ropes and slings. Lift slowly until the load is suspended to minimize swinging.

2. Loads shall be set on blocks. Do not pull a sling from under a load that is resting on the sling.

3. Ensure that wire-rope slings are protected against weather, chemicals, solvents, and high temperatures.

4. Permanently remove from service fiber-core rope slings that have been exposed to temperatures in excess of 180 degrees F (82 degrees C).

5. When wire rope slings of any grade are to be used at temperatures above 400 degrees F (204 degrees C) or below -60 degrees F (-51 degrees C), the sling manufacturer should be consulted.

6. Extremely low temperatures (less than 0 degrees F) may cause brittle fractures. Under these conditions, sudden loading should be avoided and the rope should be carefully observed while the load is being applied.

7. Do not use knotted slings.

8. Do not use single-let wire-rope slings unless proper precautions are taken to prevent suspended loads from rotating.

9. Rigging shall be configured such that slings do not reeve or slip through the hook.

10. Do not make a complete turn of wire rope around the crane hook.

11. Use protector pads or blocking at sharp corners.

12. Keep hands and fingers out of the area between the sling and the load.

13. Ensure that the weight of the load is within the rated capacity of the sling.

14. Do not use damaged slings.

15. Ensure that all personnel stand clear of the suspended load.

16. Avoid shock loading.

17. In a basket hitch, ensure that the load is balanced to prevent slippage.

18. Avoid handling hot material with wire-rope slings.

19. Use shackles or adjustable choker hooks when making choker hitches.

20. Store slings on racks away from moisture and acids when not in use.

21. Ensure that damaged wire-rope slings are rendered unusable, removed from service, discarded, and replaced with new slings.

22. Before use and before storage, check wire-rope slings for:

    i. Broken or cut wires or strands.

    ii. Rust or corrosion.

    iii. Kinks.

    iv. Broken seizing wire.

    v. Damage to swaged fittings.

    vi. Other signs of damage or abuse.

23. The capacity of wire-rope slings is derated by the manufacturer by applying the efficiency factors such as those given in Figure 11-11.

24. Do not use wire-rope clips to fabricate wire-rope slings except where the application of slings prevents the use of prefabricated slings and where the specific application is designed by a qualified person. Fabrication of wire rope slings for construction applications is also prohibited (See Section 15.4.2). Slings made with wire rope clips should not be used as a choker hitch (see Figures 11-12 and 11-13).

25. If wire-rope clips are used to fabricate slings, the capacity of the sling shall be derated in accordance with the clip manufacturer's recommendations. Manufacturer's recommendations shall also be followed with regard to clip spacing, number of clips, and torque values.

26. Wire rope clips used to fabricate wire rope slings shall be of drop-forged steel. Malleable cast iron clips shall not be used.

27. Wire rope clips attached with U-bolts shall have the U-bolt over the dead end of the rope and the live rope resting in the clip saddle. Clips shall be tightened evenly to the recommended torque. After the initial load is applied to the rope, the clip nuts shall be retightened to the recommended torque to compensate for any decrease in rope diameter caused by the load. Rope clip nuts should be retightened periodically to compensate for any further decrease in rope diameter during usage.

28. At a minimum, wire-rope slings shall be marked with the following information:

    i. Name of trademark of manufacturer

    ii. Rated capacity for the type of hitch(es)

    iii. Diameter or size

29. Sling identification shall be maintained by the user so as to be legible during the life of the sling.

30. Slings made of rope with 6 x 19 and 6 x 37 construction and cable-laid slings shall have a minimum clear length of rope 10 times the rope diameter between splices, sleeves, or end fittings.

31. Braided slings shall have a minimum clear length of rope 40 times the component (individual) rope diameter between the loops or end fittings.

32. Grommets and endless slings shall have a minimum circumferential length of 96 times the body diameter of the grommet or endless sling.

33. Other configurations may be used provided a qualified engineer provides a documented evaluation, including a destructive pull test in the configuration to be used, as well as use limitations. Minimum design factor of 5:1 shall be maintained.

Efficiencies of wire rope fittings or fastenings in percentages of strength of rope:

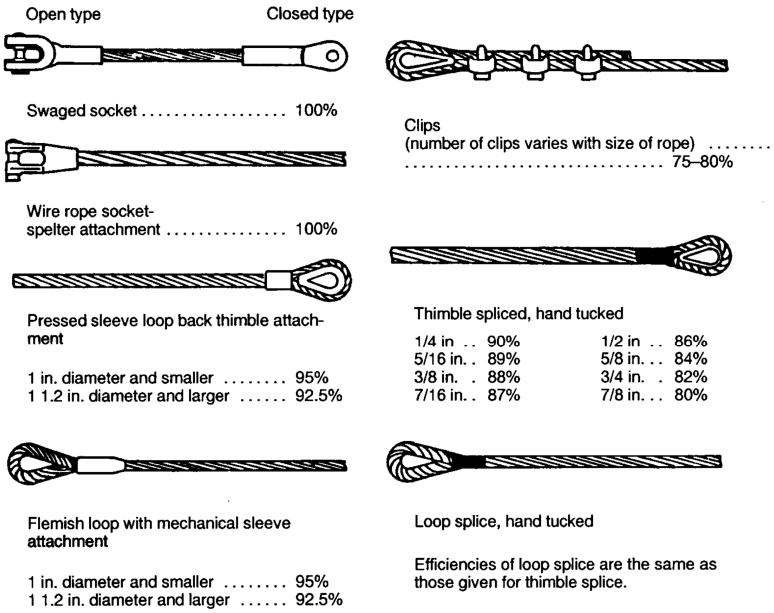

Figure 11-11. Wire-rope fastenings.

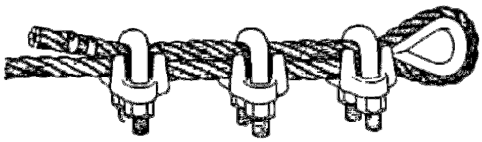

Note that the base of the clip bears against the live end of the wire rope, while the "U" of the bolt presses against the dead end.

Figure 11-12. Wire-rope clips – right Way.

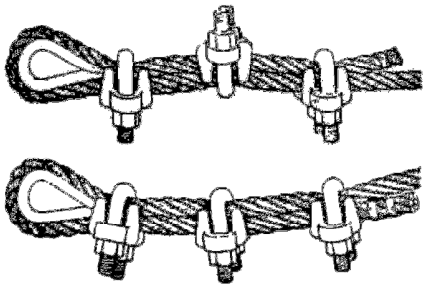

The "U" of the clips shall not bear against the live end of the wire rope because of the possibility of the rope being kinked or crushed.

Figure 11-13. Wire-rope clips – wrong way.

11.3.2.4 Critical Lifts

See chapter 2, "Critical Lifts," for critical lift requirements.

1. All provisions of paragraph 11.3.2.3.a also shall apply to critical lifts.

2. Wire-rope slings used for critical-lift service shall have an initial proof test. If proof testing cannot be verified, the wire-rope sling(s) shall be proof tested before being used to make a critical lift. As a minimum, the proof load shall be equal to the rated capacity, but shall not exceed:

   i. The wire rope or fitting manufacturers' recommendations, but in no case greater than 50 percent of the component wire rope's or structural strands' nominal strength, for all swaged socket and poured socket sling assemblies.

   ii. 125 percent of the vertical rated capacity of single-leg, hand-tucked slings.

   iii. 200 percent of the vertical rated capacity for mechanical-spliced single-let slings and endless slings.

   iv. The proof-load for multiple-leg bridle slings assemblies shall be applied to the individual leg and shall be in accordance with paragraph I, ii, and iii, as applicable.

   v. Master links to which multiple-leg slings are connected shall be proof-loaded to 200 percent times the force applied by the combined legs.

   vi. Test weights shall be accurate to within –5 percent, +0 percent of stipulated values.

3. Wire-rope sling eyes with thimbles shall be made with a thimble having a ratio of thimble diameter (D) to rope diameter (d) of 3 or more (D/d greater than or equal 3).

4. Do not use wedge sockets or wire-rope clips on slings used for critical lifts.

5. Ensure that working loads of wire-rope slings do not exceed their rated capacities.

6. Do not splice slings together.

7. Use thimble eyes for slings to be joined end-to-end.

8. Locate sling eyes so that:

   i. Adequate clearance is maintained between the attached slings and other parts or surfaces of the component or equipment.

   ii. There is no interference with the functioning of hoisting, rigging, or handling equipment.

   iii. Maximum accessibility to the eye is maintained.

   iv. Attached slings can converge over the center of gravity of the lift.

   v. Proper stability can be maintained during lifting and positioning of the item at the installation site.

   vi. The plane of the slinging eye is coincident with the plane of the sling under loaded conditions within ± 5 degrees.

   vii. Sling angles are not less than 45 degrees with the horizontal.

9. In addition to marking requirements listed for ordinary lifts, other items may need to be marked as determined on a case-by-case basis, such as the reach, type, weight of the sling assembly, and rated capacity.

11.3.3 ALLOY STEEL-CHAIN SLINGS

a. This section applies to slings made from grade 80 and 100 alloy chain manufactured and tested in accordance with National Association of Chain Manufacturers welded steel chain specifications – 1990. If chain other than this is used, it shall be used in accordance with the recommendations of the chain manufacturer.

b. Alloy Steel-chain slings differ from wire-rope slings in that components using wire are replaced by link chain. Other sling components are similar. Chain slings are more rugged and flexible, but less shock resistant than wire-rope or braided slings. This size is measured by the link stock.

c. Two basic types with many variations are used: basket type and hook type. An example of each is shown in Figure 11-14.

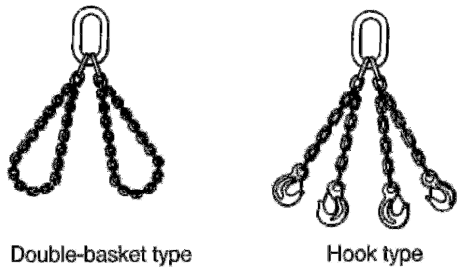

Figure 11-14. Types of chain slings.

d. Alloy-steel-chain slings shall not be heated above 1,000 degrees F (537 degrees C) after being received from the manufacturer.

e. When exposed to service temperatures in excess of 600 degrees F (315 degrees C), reduce working load limits in accordance with the chain manufacturer's recommendations.

f. Extremely low temperatures (less than 0 degrees F) may cause brittle fractures. Under these conditions, sudden loading should be avoided and the load should be lifted a very short distance while the chains are carefully inspected.

g. The design factor for steel-chain slings shall be a minimum of 4:1 based upon breaking strength.

h. Chains should be stored in racks or in designated locations when not in use. Chains should never be stored in damp or dirty places, nor in places exposed to the weather. For long-term storage, they should receive a coating of oil. The ends of all empty chains should be hooked onto the hoist hook or bull ring.

i. Chains should not be lubricated when in use because this might make them dangerous to handle. Chains should be cleaned periodically to remove abrasive grit and to facilitate inspection.

j. The total load that can be lifted safely with steel-chain slings depends on the manner by which the slings are attached to the load. If all legs of a steel-chain sling are hooked back into the master link, the safe-load capacity of the whole sling may be increased by 100 percent if the capacity of the master link is not exceeded.

k. The safe-load level of any chain sling is a function of three basic factors: size and number of legs, condition of chain and other components, and sling angle between legs and horizontal. Table 11-10 shows safe loads in pounds per leg which can be carried by various chain-sling arrangements. Note the effect of very low hook height and wide leg spreads.

l. Hooks, rings, oblong links, pear shaped links, welded or mechanical coupling links and other attachments shall have a rated capacity at least equal to that of the alloy steel chain with which they are used or the sling shall not be used in excess of the rated capacity of the weakest component.

11.3.3.1 Removal from Service Criteria

a. Missing or illegible sling identification.

b. Cracks or breaks.

c. Excessive wear, nicks, or gouges. Minimum thickness on chain links shall not be below the values listed in Table 11-11.

d. Stretched chain links or components.

e. Bent, twisted, or deformed chain links or components.

f. Evidence of heat damage.

g. Excessive pitting or corrosion.

h. Lack of ability of chain or components to hinge (articulate) freely.

i. Weld splatter.

j. For hooks, removal criteria as stated in Chapter 12.

k. Other conditions, including visible damage, that cause doubt as to the continued use of the sling.

11.3.3.2 Proof-Testing

a. Single-leg and endless alloy-steel chain slings shall be certified as having been proof-tested to 200 percent of the rated capacity prior to initial use.

b. The proof load for multiple-let bridle slings shall be applied to the individual legs and shall be 200 percent of the vertical rated capacity of a single-leg sling.

c. Master links to which multiple-leg slings are connected shall be proof-loaded to 200 percent multiplied by the force applied by the combined legs.

d. Test loads shall be accurate to within –5 percent, +0 percent of stipulated values. Either certification by the manufacturer or a pull test certified by a qualified person is acceptable.

Table 11-10. Rated load for Grade 80 Alloy Steel Chain Slings

Size in inches	Single Leg	60° Two Legs	45° Two Legs	30° Two Legs
9/32	3,500	6,100	4,900	3,500
3/8	7,100	12,300	10,000	7,100
½	12,000	20,800	17,000	12,000
5/8	18,100	31,300	25,600	18,100
¾	28,300	49,000	40,000	28,300
7/8	34,200	59,200	48,400	34,200
1	47,700	82,600	67,400	47,700
1 ¼	72,300	125,200	102,200	72,500

Reprinted from ASME B30.9-2006 by permission of The American Society of Mechanical Engineers. All rights reserved.

Notes:

(1) Other grades of proof tested steel chain include Proof Coil (grade 28), Hi-Test (Grade 43) chain and Transport (Grade 70) chain. These grades are not recommended for overhead lifting and therefore are not covered in the applicable standards.

(2) Rating of multi-leg slings adjusted for angle of loading between the inclined leg and the horizontal plane of the load.

Table 11-11. Minimum allowable thickness at any point on a link

Nominal Chain or Coupling Link Size		Minimum Allowable Thickness at Any Point on the Link	
in.	mm	in.	mm
7/32	5.5	0.189	4.80
9/32	7	0.239	6.07
5/16	8	0.273	6.93
3/8	10	0.342	8.69
1/2	13	0.443	11.26
5/8	16	0.546	13.87
3/4	20	0.687	17.45
7/8	22	0.750	19.05
1	26	0.887	22.53
1 1/4	32	1.091	27.71

Reprinted from ASME B30.9-2006 by permission of The American Society of Mechanical Engineers. All rights reserved.

11.3.3.3 Operation

a. The following shall apply to all personnel who use steel-chain slings:

1. Do not set a load on a sling or pull a sling from under a load. Place wooden blocks or other supports under the load to provide sufficient clearance for the chain.

2. Shorten chain slings by hooking back into the chain, into the master link, or with grab hooks. Do not shorten by knotting, twisting, bolting, or inserting the tip of the hook into a link.

3. Do not hammer a chain to force it into position.

4. Protect chain slings from sharp corners that might bend the links. Use a suitable pad to prevent gouging or bending of the chain links, as well as possible scarring of the load.

5. When making choker hitches with chain slings, always face the hook opening out and away from the pull of the sling so that the hooks will not slip out when slack is taken out of the sling.

6. Do not weld or perform local repairs on chain slings. All defective chain slings should be returned, through a formal procedure, to the manufacturer for examination, repair, and recertification.

7. Avoid sudden loading of chain slings.

8. Maintain latches on hooks in good condition.

9. If a chain sling does not look safe, do not use it. Do not assume that a chain sling is safe because it looks new; look for stretched links. If in doubt, check with the supervisor.

10. Do not carry loads on the point or tip of a hook.

11. Avoid unbalanced loads.

12. Do no use homemade links, makeshift fasteners formed from bolts, rods, and the like, or other nonstandard attachments.

13. Do not use makeshift or field-fabricated hooks on steel-chain slings.

14. Hook the ends of all empty chain onto the hoist hook or bull ring.

15. Each steel-chain sling shall be marked, at a minimum, with:

    i. Nominal Chain Size

    ii. Grade

    iii. Rated load for the type(s) of hitch(es) used and the angle on which the rating is based

    iv. Length (Reach)

    v. Number of legs.

    vi. Name or trademark of manufacturer

16. Where slings have more than one leg, ensure that the tag is affixed to the master link.

17. Ensure that the working load does not exceed the rated capacity of the sling.

11.3.3.4 Critical Lifts

See Chapter 2, "Critical Lifts," for critical lift requirements.

a. Single-leg and endless alloy-steel chain slings used for critical-lift service shall have an initial proof test of 200 percent of the vertical rated capacity. If proof testing cannot be verified, the sling(s) shall be proof tested before being used to make a critical lift.

b. The proof load for multiple-leg bridle slings shall be applied to the individual legs and shall be 200 percent of the vertical rated capacity of a single-leg sling.

c. Master links to which multiple-leg slings are connected shall be proof-loaded to 200 percent multiplied by the force applied by the combined legs.

11.3.4 METAL-MESH SLINGS

a. Metal-mesh slings (Figure 11-15) shall be classified with the designations shown in Table 11-12, based on types of duty and material classification.

Table 11-12. Metal-mesh sling Designations.

Type Designation	Classification	
Heavy duty	Carbon steel	35-CS
	Stainless steel	35-SS
Medium duty	Carbon steel	43-CS
	Stainless steel	43-SS
Light duty	Carbon steel	59-CS
	Stainless steel	59-SS

b. The carbon steel used in metal-mesh slings shall be processed to produce the required mechanical properties.

c. The material used for stainless-steel metal-mesh slings shall conform, at least, to the American Iron and Steel Institute standards for Type-302 or Type-304 stainless steel. Other materials may be used. When metal-mesh slings are produced from such materials, however, the sling manufacturer should be consulted for specific data.

d. The handle shall be designed to ensure:

1. At least the same rated capacity as the fabric.

2. No visible permanent deformation after proof-testing.

e. The fabric and handles shall be so joined that:

1. The rated capacity of the sling is not reduced.

2. The load is evenly distributed across the width of the fabric.

3. Sharp edges do not damage the fabric.

f. Metal-mesh slings may be painted, plated, impregnated with elastomers such as neoprene or polyvinyl chloride (PVC), or otherwise suitably coated. The coating shall not diminish the rated capacity of a sling.

g. The design factor for metal-mesh slings shall be a minimum of 5:1 based upon breaking strength.

h. Metal-mesh slings shall not be used to lift loads greater than the rated capacity, properly derated for other than straight-pull configurations (Table 11-13.).

i. Except for elastomer-impregnated slings, all metal-mesh slings covered by this section may be used without derating in a temperature range from –20 degrees F (-29 degrees C) to 550 degrees F (288 degrees C).

j. All metal-mesh slings covered by this section and impregnated with PVC or neoprene shall be used only in a temperature range from 0 degrees F (-18 degrees C) to 200 degrees F (93 degrees C).

k. For operation at temperatures outside these ranges or for other impregnations, consult the manufacturer for specific data.

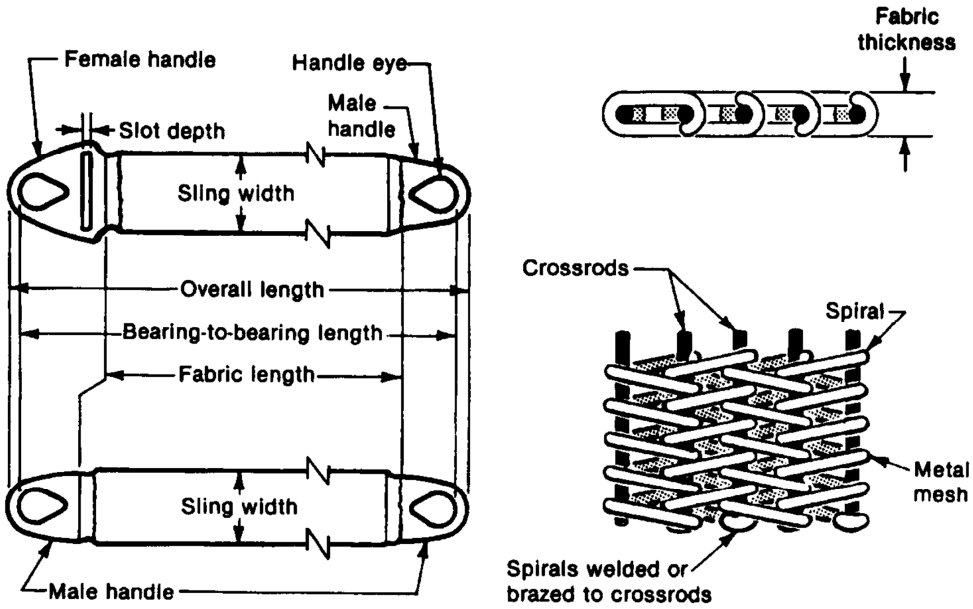

Figure 11-15. Typical metal-mesh sling.

Reprinted from ASME B30.9-2006 by permission of The American Society of Mechanical Engineers. All rights reserved.

Table 11-13. Load capacity of carbon and stainless-steel metal-mesh slings in pounds. Design Factor = 5:1

Sling width (in.)	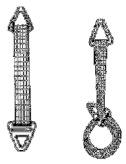 Vertical or choker	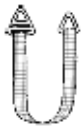 Basket or two legs	60° Basket or two legs	45° Basket or two legs	30° Basket or two legs	Sling width (in.)
Heavy duty 10-ga 35 spirals/ft of mesh width						
2	1,500	3,000	2,600	2,100	1,500	2
3	2,700	5,400	4,700	3,800	2,700	3
4	4,000	8,000	6,900	5,600	4,000	4
6	6,000	12,000	10,400	8,400	6,000	6
8	8,000	16,000	13,800	11,300	8,000	8
10	10,000	20,000	17,000	14,100	10,000	10
12	12,000	24,000	20,700	16,900	12,000	12
14	14,000	28,000	24,200	19,700	14,000	14
16	16,000	32,000	27,700	22,600	16,000	16
Medium duty 12-ga 43 spirals/ft of mesh width						
2	1,350	2,700	2,300	1,900	1,400	2
3	2,000	4,000	3,500	2,800	2,000	3
4	2,700	5,400	4,700	3,800	2,700	4
6	4,500	9,000	7,800	6,400	4,500	6
8	6,000	12,000	10,400	8,500	6,000	8
10	7,500	15,000	13,000	10,600	7,500	10
12	9,000	18,000	15,600	12,700	9,000	12
14	10,500	21,000	18,200	14,800	10,500	14
16	12,000	24,000	20,800	17,000	12,000	16
Light duty 14-ga 59 spirals/ft of mesh width						
2	900	1,800	1,600	1,300	900	2
3	1,400	2,800	2,400	2,000	1,400	3
4	2,000	4,000	3,500	2,800	2,000	4
6	3,000	6,000	5,200	4,200	3,000	6
8	4,000	8,000	6,900	5,700	4,000	8
10	5,000	10,000	8,600	7,100	5,000	10
12	6,000	12,000	10,400	8,500	6,000	12
14	7,000	14,000	12,100	9,900	7,000	14
16	8,000	16,000	13,900	11,300	8,000	16

11.3.4.1 Removal from Service Criteria

Metal-mesh slings shall be removed from service if any of the following defects are present:

a. Missing or illegible sling identification

b. Broken weld or a broken brazed joint along the sling edge

c. Broken wire in any part of the mesh.

d. Reduction in wire diameter of 25% due to abrasion or 15% due to corrosion.

e. Lack of flexibility due to distortion of the mesh

f. Distortion of the choker fitting so the depth of the slot is increased by more than 10%.

g. Distortion of either end fitting so the width of the eye opening is decreased by more than 10%.

h. A 15% reduction of the original cross-sectional area of any point around the hook opening of the end fitting.

i. Visible distortion of either end fitting out of its plane.

j. Cracked end fitting.

k. Slings in which the spirals are locked or without free articulation shall not be used.

l. Fittings that are pitted, corroded, cracked, bent, twisted, gouged, or broken.

m. Other conditions, including visible damage, that cause doubt as to the continued use of the sling.

11.3.4.2 Proof-Testing

a. Metal-mesh slings shall be certified as having been proof-tested to 200 percent of their rated capacity prior to initial use.

b. Coated slings shall be proof-tested prior to being coated.

c. Test loads shall be accurate to within –5 percent, +0 percent of stipulated values. Either certification by the manufacturer or a pull test certified by a qualified person is acceptable.

11.3.4.3 Operation

a. The following shall apply to all personnel who use metal-mesh slings:

   1. Ensure that the weight of the load is within the rated capacity of the sling.

   2. Ensure that metal-mesh slings have suitable characteristics and rated capacity for the load and environment.

b. Metal-mesh slings should be long enough to provide the maximum practical angle between the sling leg and the horizontal (minimum practical angle at the crane hook if vertical angles are used).

c. Do not shorten metal-mesh slings with knots, bolts, or other unapproved methods.

d. Do not use damaged slings.

e. Securely hitch metal-mesh slings to the load.

f. Ensure that sharp corners are padded.

g. Keep hands and fingers out of the area between the sling and the load.

h. Ensure that all personnel stand clear of the suspended load.

i. Avoid shock loading.

j. Do not pull metal-mesh slings from under a load when the load is resting on the sling.

k. Do not store metal-mesh slings in an area where they will be subjected to mechanical damage or corrosive action.

l. Avoid twisting and kinking of the legs.

m. In a choker hitch, ensure that metal-mesh slings are long enough so that the female handle chokes freely on the mesh, never on the handle.

n. In a choker hitch, ensure that the load is balanced. When this cannot be done, consult the manufacturer for a derating factor or for other means of handling this type of load.

o. In a basket hitch, ensure that the load is balanced to prevent slippage.

p. Do not use metal-mesh slings in which the spirals are locked or are without free articulation.

q. Never hammer a sling to straighten a spiral or cross rod or to force a spiral into position.

r. Metal-mesh slings used in pairs should be attached to a spreader beam.

s. Ensure that all metal-mesh slings have a permanently affixed metal identification tag or tags containing the following information:

1. Manufacturer's name or trademark.

2. Rated load for the type(s) of hitch(es) used and the angle upon which it is based.

3. Width and gauge.

11.3.4.4 Critical Lifts

See Chapter 2, "Critical Lifts," for critical lift requirements.

a. Metal-mesh slings used for critical-lift service shall have an initial proof test of 200 percent of the vertical rated capacity. If proof testing cannot be verified, the sling(s) shall be proof tested before being used to make a critical lift.

b. The proof load for multiple-leg bridle slings shall be applied to the individual legs and shall be 200 percent of the vertical rated capacity of a single-leg sling.

c. Master links to which multiple-leg slings are connected shall be proof-loaded to 200 percent multiplied by the force applied by the combined legs.

11.3.5 SYNTHETIC-WEB SLINGS

a. Synthetic web shall posses the following qualities:

1. Be of sufficient strength to meet the sling manufacturer's requirements.

2. Have uniform thickness and width.

3. Have selvage edges and not be split from its woven width.

b. The thread used in the manufacture of a synthetic-web sling shall be of the same type of material as the web.

c. Fittings shall be:

1. Of sufficient strength to sustain twice the rated capacity without permanent deformation.

2. Of a minimum breaking strength equal to that of the sling.

3. Free of all sharp edges that would in any way damage the webbing.

d. The stitching in all load-bearing splices shall be of sufficient strength to maintain the sling design factor.

e. Synthetic-web slings may be coated with elastomers, anti-fungicides, UV inhibitors or other treatments that will provide improved characteristics such as abrasion resistance, sealing of pores, increased coefficient of friction, and UV resistance.

f. The design factor for synthetic-web slings shall be a minimum of 5:1 based upon breaking strength.

g. Rated capacities are affected by the type of hitch used and by the angle from the vertical when used as multi-legged slings or in basket hitches. The sling manufacturer shall supply data on these effects.

h. Synthetic-web slings are available in a number of configurations as follows (see Figure 11-17):

1. *Endless or Grommet Sling* – Both ends of one piece of webbing are lapped and sewn to form a continuous piece. They can be used as vertical hitches, bridle hitches, in choker arrangements, or as basket slings.

2. *Standard Eye and Eye* – Webbing is assembled and sewn to form a flat eye sling with an eye at each end and the eye openings in the same plane as the sling body. The eyes may either be full web width or may be tapered by being folded and sewn to a width narrower than the webbing width.

3. *Twisted Eye* – An eye-and-eye type that has twisted terminations at both ends. The eye openings are at 90 degrees to the plane of the sling body. This configuration is also available with either full-width or tapered eyes.

4. *Metal End Fittings* - In place of the sewn eyes, synthetic-web slings are also available with metal end fittings (see Figure 11-19). The most common are triangle and choker hardware. Combination hardware consists of a triangle for one end of the sling and a triangle/rectangle choker attachment for the other end. With this arrangement, both choker and basket hitches, as well as straight hitches, may be rigged. They help reduce wear in the sling eyes and thus lengthen sling life.

i. Synthetic-web slings can be cut by repeated use around sharp-cornered objects. They eventually show signs of abrasion when they are repeatedly used to hoist rough-surfaced products. There are, however, protective devices offered by most sling manufacturers that minimize these effects (see Figure 11-20). Other protective devices include:

1. Buffer strips of leather, nylon, or other materials that are sewn on the body of a sling protect against wear. While offering some resistance to wear and cutting, leather is subject to weathering and gradual deterioration. Leather is not recommended in lengths over 6 ft due to the different stretching characteristics of the leather and webbing. On the other hand, nylon-web wear pads are more resistant to weathering, oils, grease, and most alkalis; and they stretch in the same ratio as the sling body.

2. Edge guards consist of strips of webbing or leather sewn around each edge of the sling. This is necessary for certain applications where the sling edges are subject to damage.

3. Sleeve- or sliding-tube-type wear pads are available for slings used to handle material having sharp edges. They can be positioned on the sling where required, do not move when the sling stretches, adjust to the load, and cover both sides of the sling.

4. Eye buffers can be attached at the bearing point of the sling eye. This attachment increases the longevity of the fabric sling.

5. Coatings can be applied to provide added resistance to abrasion and chemical damage. These treatments also increase the coefficient of friction, affording a better grip when loads with slippery surfaces are to be handled.

j. The synthetic-web sling capacities listed in Tables 11-14 and 11-15 are approximations only and are based on nylon or polyester webbing having breaking strengths between 6,800 and 9,800 lb/in. of webbing width. The capacities are also based on a 5:1 design factor and assume that the end fittings are of adequate strength.

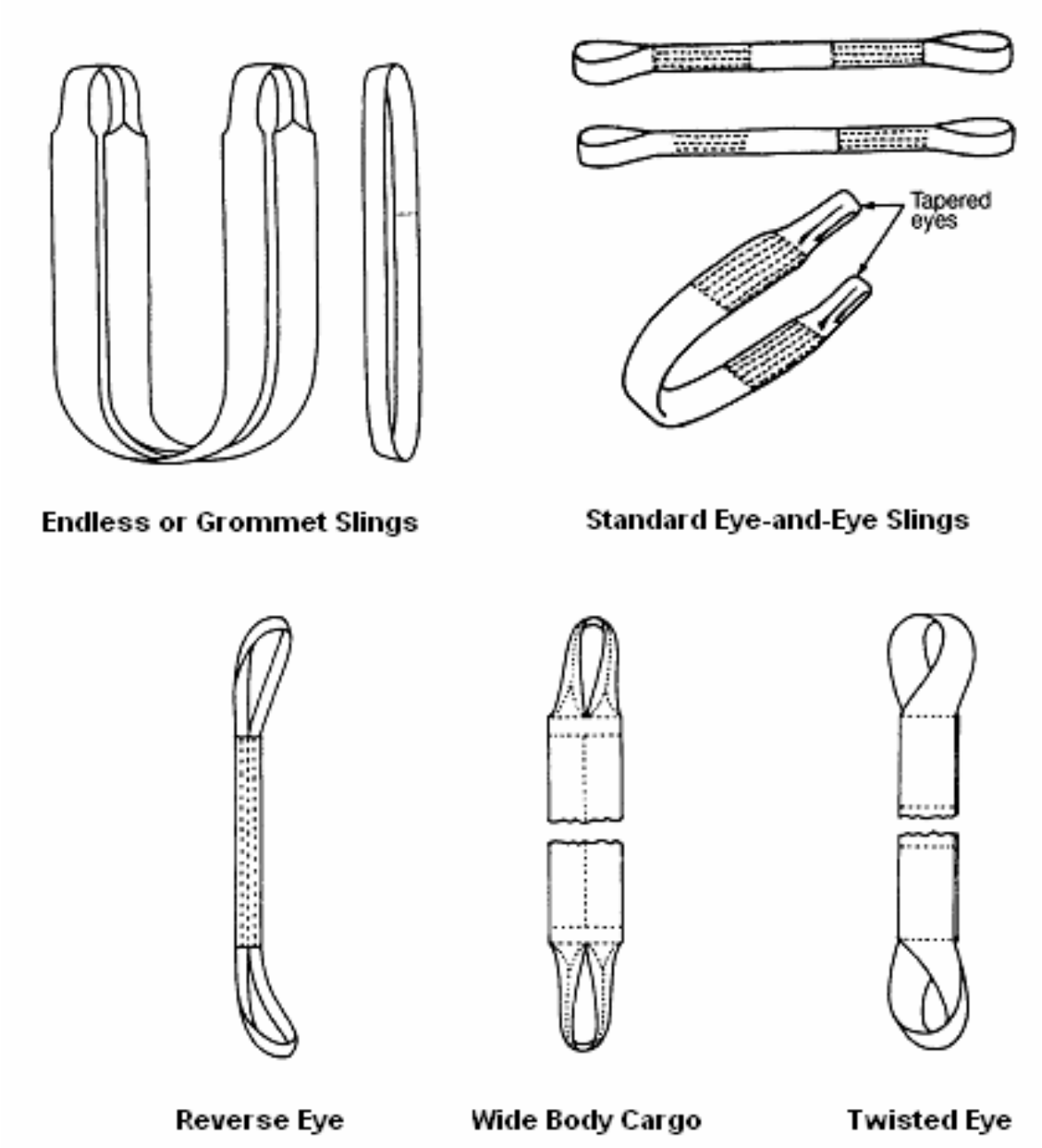

Figure 11-17. Synthetic-web sling types.

k. Although safe working loads for bridle hitches in the choker or double-basket configuration are provided, they should be used only with extreme caution because, as the sling angle decreases, one edge of the web will take all the load, producing a risk of tearing (see Figure 11-18).

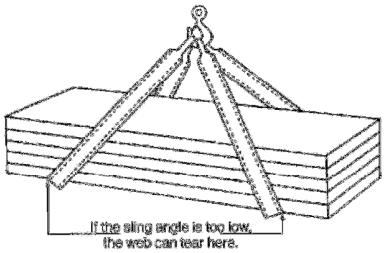

Figure 11-18. Effect of low sling angle.

l. Synthetic-web slings shall be used in accordance with the sling manufacturer's recommendation.

m. Conventional three-strand natural or synthetic fiber rope slings are NOT recommended for lifting service, and should be used only if conventional sling types are not suitable for a unique application. The requirements of ASME B 30.9 ("Slings"), Section 9-4, and 29 CFR 1910.184(h) shall be followed.

n. Tiedown and/or ratchet strap shall not be used as synthetic-web slings. Only synthetic-web slings constructed from webbing approved for sling construction by the manufacturer or other qualified person shall be used at DOE locations.

11.3.5.1 Removal from Service Criteria

Slings shall be immediately removed from service if any of the following defects are visible:

a. Acid or caustic burns.

b. Melting or charring of any part of the surface.

c. Snags, punctures, tears, or cuts.

d. Broken or worn stitching in load bearing splices.

e. Excessive abrasive wear.

f. Knots in any part of the sling.

g. Excessive pitting or corrosion, or cracked, distorted, or broken fittings.

h. Discoloration, brittle or stiff areas on any part of the sling that may indicate chemical or UV damage.

i. Other visible damage that causes doubt as to the strength of the sling.

j. Missing or illegible sling identification.

11.3.5.2 Proof-Testing

a. For single or multiple leg slings and endless slings, each leg shall be proof loaded to 2 times the single-leg vertical hitch rated load.

b. The proof load for fittings attached to single legs shall be a minimum of 2 times the single-leg vertical hitch rated load.

c. Master links for two leg bridle slings shall be proof loaded to a minimum of 4 times the single leg vertical hitch rated load.

d. Master links for three leg bridle slings shall be proof loaded to a minimum of 6 times the single leg vertical hitch rated load.

e. Master links for four leg bridle slings shall be proof loaded to a minimum of 8 times the single leg vertical hitch rated load.

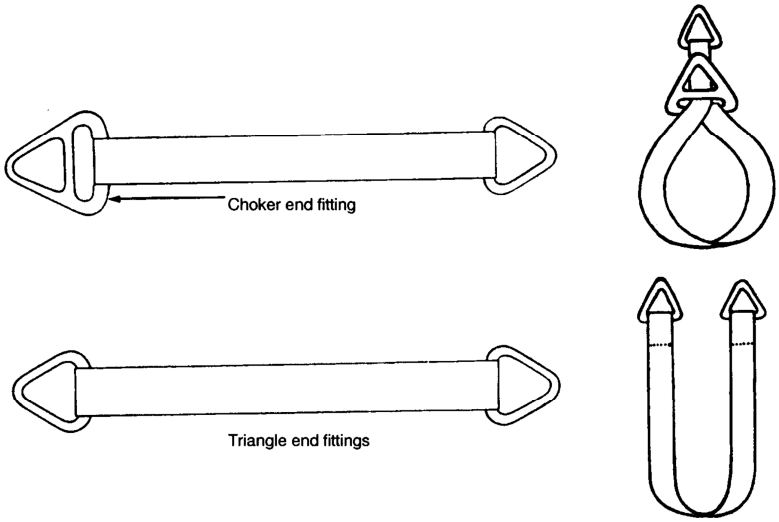

Figure 11-19. Examples of Metal End Fittings

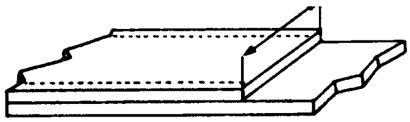

REGULAR. This is the type of edge protection that is sewn on to give fixed protection at expected wear points. They can be sewn anywhere on the sling, at any length on one side, or on both sides.

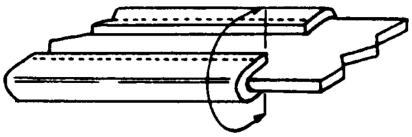

EDGEGUARD. A strip of webbing or leather is sewn around each edge of the sling. This is necessary for certain applications where the sling edges are subject to damage.

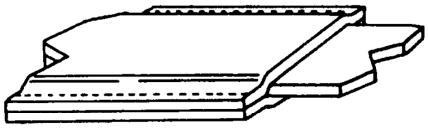

SLEEVE. Sometimes called sleeve or sliding-tube type wear pads, these pads are ideal for handling material with sharp edges because the sleeve does not move when the sling stretches and adjusts to the load. Sleeves cover both sides of the sling and can be shifted to points of expected maximum wear.

Figure 11-20. Examples of Web and edge protectors

Table 11-14. Typical load capacity of Class 5 synthetic web slings in pounds.
Design Factor 5:1
(Regular eye and eye, twisted eye, triangle fittings, choker fittings)

Web width (in.)	Vertical	Choker	Basket or two legs				Web width (in.)
Single Ply Web Slings (6,800 lb/in. material)							
1	1,100	880	2,200	1,900	1,600	1,100	1
2	2,200	1,760	4,400	3,800	3,100	2,200	2
3	3,300	2,640	6,600	5,700	4,700	3,300	3
4	4,400	3,520	8,800	7,600	6,200	4,400	4
5	5,500	4,400	11,000	9,500	7,800	5,500	5
6	6,600	5,280	13,200	11,400	9,300	6,600	6
Double Ply Web slings (6,800 lb/in. material)							
1	2,200	1,760	4,400	3,800	3,100	2,200	1
2	4,400	3,520	8,800	7,620	6,200	4,400	2
3	6,600	5,280	13,200	11,400	9,300	6,600	3
4	8,200	6,560	16,400	14,200	11,600	8,200	4
5	10,200	8,160	20,400	17,700	14,400	10,200	5
6	12,300	9,840	24,600	21,300	17,400	12,300	6

Reprinted from ASME B30.9-2006 by permission of The American Society of Mechanical Engineers. All rights reserved.

(1) For an endless sling with vertical hitch carrying a load of such size as to throw the legs more than 5 degrees off vertical, use rated load data for regular eye and eye sling, basket hitch and corresponding leg angles.

(2) Follow manufacturer's capacities, they vary from manufacturer to manufacturer and from this chart.

(3) Choker hitch values apply only to choke angles greater than 120 degrees.

Table 11-15. Typical load capacity of Class 7 synthetic web slings in pounds.
Design Factor 5:1
(Regular eye, twisted eye, triangle fittings, choker fittings)

Web width (in.)	Vertical	Choker	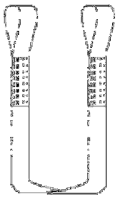 Basket or two legs				Web width (in.)
Single Ply Web Slings (9,800 lb/in. material)							
1	1,600	1,280	3,200	2,800	2,300	1,600	1
2	3,100	2,480	6,200	5,400	4,400	3,100	2
3	4,700	3,760	9,400	8,100	6,600	4,700	3
4	6,200	4,960	12,400	10,700	8,800	6,200	4
5	7,800	6,240	15,600	13,500	11,000	7,800	5
6	9,300	7,440	18,600	16,100	13,200	9,300	6
Double Ply Web slings (9,800 lb/in. material)							
1	3,100	2,480	6,200	5,400	4,400	3,100	1
2	6,200	4,960	12,400	10,700	8,800	6,200	2
3	8,800	7,040	17,600	15,200	12,400	8,800	3
4	11,000	8,800	22,000	19,100	15,600	11,000	4
5	13,700	10,960	27,400	23,700	19,400	13,700	5
6	16,500	13,200	33,000	28,600	23,000	16,500	6

Reprinted from ASME B30.9-2006 by permission of The American Society of Mechanical Engineers. All rights reserved.

(1) For an endless sling with vertical hitch carrying a load of such size as to throw the legs more than 5 degrees off vertical, use rated load data for regular eye and eye sling, basket hitch and corresponding leg angles.

(2) Follow manufacturer's capacities, they vary from manufacturer to manufacturer and from this chart.

(3) Choker hitch values apply only to choke angles greater than 120 degrees.

11.3.5.3 Operation

The following shall apply to all personnel who use synthetic-web slings:

a. Determine the weight of the load and center of gravity.

b. Select a sling having suitable characteristics for the type of load, hitch, and environment.

c. Ensure that slings with end fittings that are used in a choker hitch have sufficient length to that the choking action is on the body of the sling.

d. In slings used in a basket hitch, balance the load to prevent slippage.

e. Do not drag slings across the floor or over any abrasive surface.

f. Do not twist or tie slings into knots.

g. Protect slings from being cut by sharp corners, sharp edges, and highly abrasive surfaces.

h. Do not pull slings from under loads when a load is resting on a sling.

i. Do not use synthetic-web slings to lift loads in excess of the rated capacity. Properly derate for other than straight-pull configuration.

j. Store synthetic-web slings to prevent mechanical or chemical damage.

k. Do not use nylon slings where acid conditions exist.

l. Do not use polyester and polypropylene slings where caustic conditions exist.

m. Nylon and polyester slings shall not be used on contact with objects or at temperatures in excess of 194 degree F (90 degree C), or below -40 degree F (-40 degree C). Polypropylene slings shall not be used in contact with objects or at temperatures in excess of 150 degree F (66 degree C), or below -40 degree F (-40 degree C). The sling manufacturer should be consulted for the temperature range of slings made from other synthetic yarns.

n. Do not use aluminum fittings where acid or caustic fumes, vapors, sprays, mists or liquids are present.

o. Ensure that each sling is permanently marked to show:

   1. Name or trademark of manufacturer.

   2. Manufacturer's code or stock number.

   3. Rated capacity for types of hitches used.

   4. Type of synthetic-web material.

p. Synthetic web slings (e.g., Kevlar, K-Spec, nylon, polyester) may be used in radiation areas only when a qualified person ensures that the absorbed dose does not exceed 100,000 rad during the life of the sling.

11.3.5.4 Critical Lifts

See Chapter 2, "Critical Lifts," for critical lift requirements.

a. Synthetic-web slings used for critical-lift service shall have an initial proof test of 200 percent of the vertical rated capacity. If proof testing cannot be verified, the sling(s) shall be proof tested before being used to make a critical lift.

b. Proof testing shall be performed in accordance with Section 11.3.5.2, Proof-Testing.

11.3.6 SYNTHETIC ROUNDSLINGS

a. Synthetic roundslings shall possess the following qualities:

   1. Core yarn shall be of a synthetic fiber wound together on a plurality of turns for even distribution of the load.

2. In general, the cover and core should be of the same type of material. However, in chemically active environments, the cover and core shall be of the same type of material.

3. When the core and cover are the same yarn type, the thread should be of the same yarn type. When the cover and the core are of different yarn type, the thread should be of the same material as the core.

4. Finishes and coatings shall be compatible with material of the core, cover, and thread and not impair the performance of the roundsling.

b. Fittings shall be:

1. Of sufficient strength to sustain twice the rated capacity without permanent deformation.

2. Of a minimum breaking strength equal to that of the roundsling.

3. Free of all sharp edges that would in any way damage the roundsling.

4. Compatible with the mechanical and environmental requirements imposed on the roundsling.

c. The roundsling manufacturer should be consulted before roundslings are used in chemically active environments.

d. Polyester slings shall not be used on contact with objects or at temperatures in excess of 194 degree F (90 degree C), or below -40 degree F (-40 degree C). Polypropylene slings shall not be used in contact with objects or at temperatures in excess of 150 degree F (66 degree C), or below -40 degree F (-40 degree C). The sling manufacturer should be consulted for the temperature range of slings made from other synthetic yarns.

e. The design factor for synthetic roundslings shall be a minimum of 5:1 based on breaking strength.

f. Rated capacities are affected by the type of hitch used and by the angle from the vertical when used as multi-legged slings or in basket hitches. The sling manufacturer shall supply data on these effects.

g. Synthetic roundslings can be cut by repeated use around sharp-cornered objects. They eventually show sings of abrasion when they are repeatedly used to hoist rough-surfaced products. There are, however, protective devices offered by most sling manufacturers that minimize these effects.

h. The roundsling capacities listed in Table 11-16 are approximate only. The capacities are also based on a 5:1 design factor, and assume that the end fittings are of adequate strength.

11.3.6.1 Removal from Service Criteria

Synthetic roundslings shall be removed from service if any of the following defects are visible:

a. Missing or illegible sling identification.

b. Acid or caustic burns.

c. Evidence of heat damage.

d. Holes, tears, cuts, abrasive wear, or snags that expose the core yarns.

e. Broken or damaged core yarns.

f. Weld splatter that exposes core yarns.

g. Roundslings that are knotted.

h. Discoloration and brittle or stiff areas on any part of the sling, which may mean chemical or UV damage.

i. Fittings that are pitted, corroded, cracked, bent, twisted, gouged or broken

j. Hooks whose condition meets the removal criteria of Section 12.2.

k. Other conditions, including visible damage, that may cause doubt as to the continued use of the sling.

11.3.6.2 Proof-Testing

a. When specified by the purchaser, synthetic round slings of all types shall be certified as having been proof-tested prior to initial use.

   1. For single or multiple leg slings and endless slings, each leg shall be proof loaded to 2 times the single-leg vertical hitch rated load.

   2. The proof load for fittings attached to single legs shall be a minimum of 2 times the single-leg vertical hitch rated load.

   3. Master links for two leg bridle slings shall be proof loaded to a minimum of 4 times the single leg vertical hitch rated load.

   4. Master links for three leg bridle slings shall be proof loaded to a minimum of 6 times the single leg vertical hitch rated load.

   5. Master links for four leg bridle slings shall be proof loaded to a minimum of 8 times the single leg vertical hitch rated load.

b. Test loads shall be accurate to within –5 percent, +0 percent of stipulated values. Either certification by the manufacturer or a pull test certified by a qualified person is acceptable.

11.3.6.3 Operation

The following shall apply to all personnel who use roundslings:

a. Determine the weight and center of gravity of the load.

b. Select a sling having suitable characteristics for the type of lad, hitch, and environment.

c. Ensure that slings with end fittings that are used in a choker hitch have sufficient length so that the choking action is on the body f the sling.

d. In slings used in a basket hitch, balance the load to prevent slippage.

e. Do not drag slings across the floor or over any abrasive surface.

f. Do not twist or tie slings into knots.

g. Protect slings from being cut by sharp corners, sharp edges, and highly abrasive surfaces.

h. Do not pull slings from under loads when a load is resting on a sling.

i. Do not use roundslings to lift loads in excess of the rated capacity, properly derated for other than straight-pull configuration.

j. When not in use, store slings to prevent mechanical, chemical or environmental damage.

k. Personnel should never stand in line with or next to a roundsling that is under tension.

l. If extreme temperatures are involved, ensure the guidance in 11.3.6.d is followed.

m. Do not allow the load, hook, or any fitting to constrict, bunch, or pinch roundslings.

n. Ensure that roundslings are <u>not</u> used as bridles on suspended personnel platforms.

o. For multiple leg roundslings used with non-symmetrical loads, an analysis should be performed by a qualified person to prevent overloading of any leg.

p. Ensure that each sling is permanently marked to show:

   1. Name or trademark of manufacturer.

   2. Manufacturer's code or stock number.

3. Rated loads for the type(s) of hitch(es) used and the angle upon which it is based.

4. Core material

5. Cover material, if different than core material.

q. Synthetic roundslings (e.g., Kevlar, K-Spec, nylon, polyester) may be used in radiation areas only when a qualified person ensures that the absorbed dose does not exceed 100,000 rad during the life of the sling.

11.3.6.4 Critical Lifts

See Chapter 2, "Critical Lifts," for critical lift requirements.

a. Synthetic roundslings used for critical-lift service shall have an initial proof test of 200 percent of the vertical rated capacity. If proof testing cannot be verified, the sling(s) shall be proof tested before being used to make a critical lift.

b. Proof testing shall be performed in accordance with Section 11.3.6.2, Proof-Testing.

Table 11-16 - Load capacity of Single Leg Polyester Roundslings in pounds. Endless and Eye-and-Eye Type, Design Factor 5:1

Size (Note 1)	Vertical	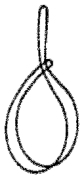 Choker	Basket or two leg	60 degrees	45 degrees	30 degrees
1	2,600	2,100	5,200	4,500	3,700	2,600
3/82	5,300	4,200	10,600	9,300	7,500	5,300
½3	6,400	6,700	16,800	14,500	11,900	6,400
5/84	10,600	8,500	21,200	18,400	15,000	10,600
¾5	13,200	10,600	26,400	22,900	18,700	13,200
7/86	16,800	13,400	33,600	29,100	23,800	16,800
7	21,200	17,000	42,400	36,700	30,000	21,200
8	25,000	20,000	50,000	43,300	35,400	25,000
9	31,000	24,800	62,000	53,700	43,800	31,000
10	40,000	32,000	80,000	69,300	56,600	40,000
11	53,000	42,400	106,000	91,800	74,900	53,000
12	66,000	52,800	132,000	114,300	93,300	66,000
13	90,000	72,000	180,000	155,900	127,300	90,000

Reprinted from ASME B30.9-2006 by permission of The American Society of Mechanical Engineers. All rights reserved.

NOTES:

1. Roundslings are identified by the vertical rated load shown on the tag. The Size Number in this column has been adopted by the Web Sling and Tiedown Association to describe certain polyester roundslings. They are included for reference only. Other polyester roundslings may have different vertical rated loads.

2. Color guidelines for polyester roundsling covers are widely used to indicate the vertical rated load of roundslings; however, this is not followed by some manufacturers. Always select and use roundslings by the rated load as shown on the tag, never by color.

CHAPTER 12
RIGGING HARDWARE

This chapter provides requirements for rigging accessories used in hoisting and rigging – shackles, eyebolts, eye nuts, links, rings, swivels, wire-rope clips, turnbuckles, rigging hooks, and load-indicating devices and implements the requirements of ANSI/ASME B30.26, "Rigging Hardware" (for latest ASME standards, see http://catalog.asme.org/home.cfm?Category=CS).

12.1 GENERAL 12-1
12.1.1 Good and Bad Rigging Practices 12-1

12.2 RIGGING HOOKS 12-5
12.2.1 Design 12-5
12.2.2 Marking 12-5
12.2.3 Construction 12-5
12.2.4 Load Limits 12-5
12.2.5 Inspections 12-5
12.2.6 Testing 12-6
12.2.7 Maintenance 12-6
12.2.8 Operation 12-6

12.3 SHACKLES 12-7
12.3.1 General 12-7
12.3.2 Effects of Environment 12-7
12.3.3 Training 12-7
12.3.4 Inspections 12-7
12.3.5 Removal Criteria 12-8
12.3.6 Repairs 12-8
12.3.7 Critical Lifts 12-8

12.4 EYEBOLTS 12-11
12.4.1 General 12-11
12.4.2 Effects of Environment 12-11
12.4.3 Training 12-11
12.4.4 Inspections 12-11
12.4.5 Removal Criteria 12-12
12.4.6 Repairs 12-12
12.4.7 Critical Lifts 12-12

12.5 EYE NUTS 12-14
12.5.1 General 12-14
12.5.2 Effects of Environment 12-14
12.5.3 Training 12-14
12.5.4 Inspections 12-14
12.5.5 Removal Criteria 12-15
12.5.6 Repairs 12-15
12.5.7 Critical Lifts 12-15

12.6 TURNBUCKLES 12-16
12.6.1 General 12-16
12.6.2 Operating Practices 12-16

12.6.3 Effects of Environment 12-16
12.6.4 Training 12-16
12.6.5 Inspections 12-16
12.6.6 Removal Criteria 12-17
12.6.7 Repairs 12-17
12.6.8 Critical Lifts 12-17

12.7 LINKS, RINGS, AND SWIVELS 12-19
12.7.1 General 12-19
12.7.2 Operating Practices 12-19
12.7.3 Effects of Environment 12-19
12.7.4 Training 12-19
12.7.5 Inspections 12-19
12.7.6 Removal Criteria 12-20
12.7.7 Repairs 12-20
12.7.8 Critical Lifts 12-20

12.8 SWIVEL HOIST RINGS 12-21
12.8.1 General 12-21
12.8.2 Effects of Environment 12-21
12.8.3 Training 12-21
12.8.4 Inspections 12-21
12.8.5 Removal Criteria 12-22
12.8.6 Repairs 12-22
12.8.7 Critical Lifts 12-22

12.9 LOAD-INDICATING DEVICES 12-25
12.9.1 General 12-25
12.9.2 Critical Lifts 12-25

12.10 PRECISION LOAD POSITIONERS 12-26
12.10.1 General 12-26
12.10.2 Critical Lifts 12-26

12.11 COMPRESSION HARDWARE 12-27
12.11.1General 12-27
12.11.2 Assembly – Wire Rope Clips 12-27
12.11.3 Assembly – Wedge Sockets 12.27
12.11.4 Effects of Environment 12-28
12.11.5 Training 12-28
12.11.6 Inspections 12-28
12.11.7 Removal Criteria 12-28
12.11.8 Repairs 12-29
12.11.9 Critical Lifts 12-29

12.1 GENERAL

a. The information presented in this chapter provides guidance for safely handling lifted loads. Diagrams are used to illustrate hoisting and rigging principles and good and bad rigging practices. This is not a rigging textbook; the information should be applied only by qualified riggers.

b. All manufacturer-provided lift points designed for and installed on engineered or manufactured equipment are considered part of the equipment and are acceptable for their intended use. Manufacturer-supplied lift points shall:

   1. Meet manufacturer's pre-operational inspection, testing, and maintenance criteria.
   2. Be inspected by a designated person prior to use.
   3. Be used in accordance with manufacturer's instructions. In the absence of such information, further qualified technical support may be needed.

c. Rigging accessories that have been damaged or removed from service shall be made unusable for hoisting and rigging operations before being discarded.

d. Determine the weight of the load:

   1. From markings on the load.
   2. By weighing, if the load is still on the truck or railroad car.
   3. From drawings or other documentation.
   4. By calculation, using the load dimensions and the weights of common materials in Table 12-1.

e. Determine the center of gravity of the load as accurately as possible:

   1. From drawings or other documentation.
   2. From markings on the load.
   3. By calculation.

f. Determine the best method to attach the load and select the lifting devices (e.g., eyebolts or shackles).

g. Evaluate load stability (i.e., evaluate load center of gravity with respect to lift points)

h. Rigging equipment loading for applications other than vertical shall be evaluated as shown in Fig. 12-4.

i. Manufacturer specifications and requirements for use and application of rigging accessories shall be followed.

j. Multiple slings or rigging hardware gathered in a link or ring shall not exceed a 120° included angle (See Fig. 12-4).

k. The horizontal angle of loading should not be less than 30° unless approved by a qualified person (See Fig. 12-4).

l. All rigging attachment points (e.g., eyebolts, imbedded anchor bolts) shall be evaluated to ensure their capability to safely carry imposed rigging loads.

m. The working load limit (WLL) of rigging hardware shall not be exceeded in its as configured application.

n. Rigging hardware service is defined as follows for all types of rigging hardware other than rigging hooks (for hooks see Section 12.2.5.3.b):

   1. Normal – Service that involves use of loads at or below the rated load.
   2. Severe – Service that involves normal service coupled with abnormal rigging or operating conditions.
   3. Special – Service that involves operation, other than normal or severe, which is approved by a qualified person.

12.1.1 GOOD AND BAD RIGGING PRACTICES

Figure 12-1 illustrates some good and bad rigging practices.

Table 12-1. Weights of Common Materials

Name of Metal	Weight (lb/ft^3)	Name of Material	Weight (lb/ft^3)
Aluminum	166	Bluestone	160
Antimony	418	Brick, pressed	50
Bismuth	613	Brick, common	125
Brass, cast	504	Cement, Portland (packed)	100-120
Brass, rolled	523	Cement, Portland (loose)	70-90
Copper, cast	550	Cement, slag (packed)	80-100
Copper, rolled	555	Cement, slag (loose)	55-75
Gold, 24-carat	1,204	Chalk	156
Iron, cast	450	Charcoal	15-34
Iron, wrought	480	Cinder concrete	110
Lead, commercial	712	Clay, ordinary	120-150
Mercury, 60 degrees F	846	Coal, hard, solid	93.5
Silver	655	Coal, hard, broken	54
Steel	490	Coal, soft, solid	84
Tin, cast	458	Coal, soft, broken	54
Uranium	1,163	Coke, loose	23-32
Zinc	437	Concrete or stone	140-155
		Earth, rammed	90-100
Name of wood		Granite	165-170
		Gravel	117-125
Ash	35	Lime, quick (ground loose)	53
Beech	37	Limestone	170
Birch	40	Marble	164
Cedar	22	Plaster of paris (cast)	80
Cherry	30	Sand	90-106
Chestnut	26	Sandstone	151
Cork	15	Shale	162
Cypress	27	Slate	160-180
Ebony	71	Terra-cotta	110
Elm	30	Traprock	170
Fir, Balsam	22	Water	65
Hemlock	31		
Maple, Oak	62		
Pine, Poplar	30		

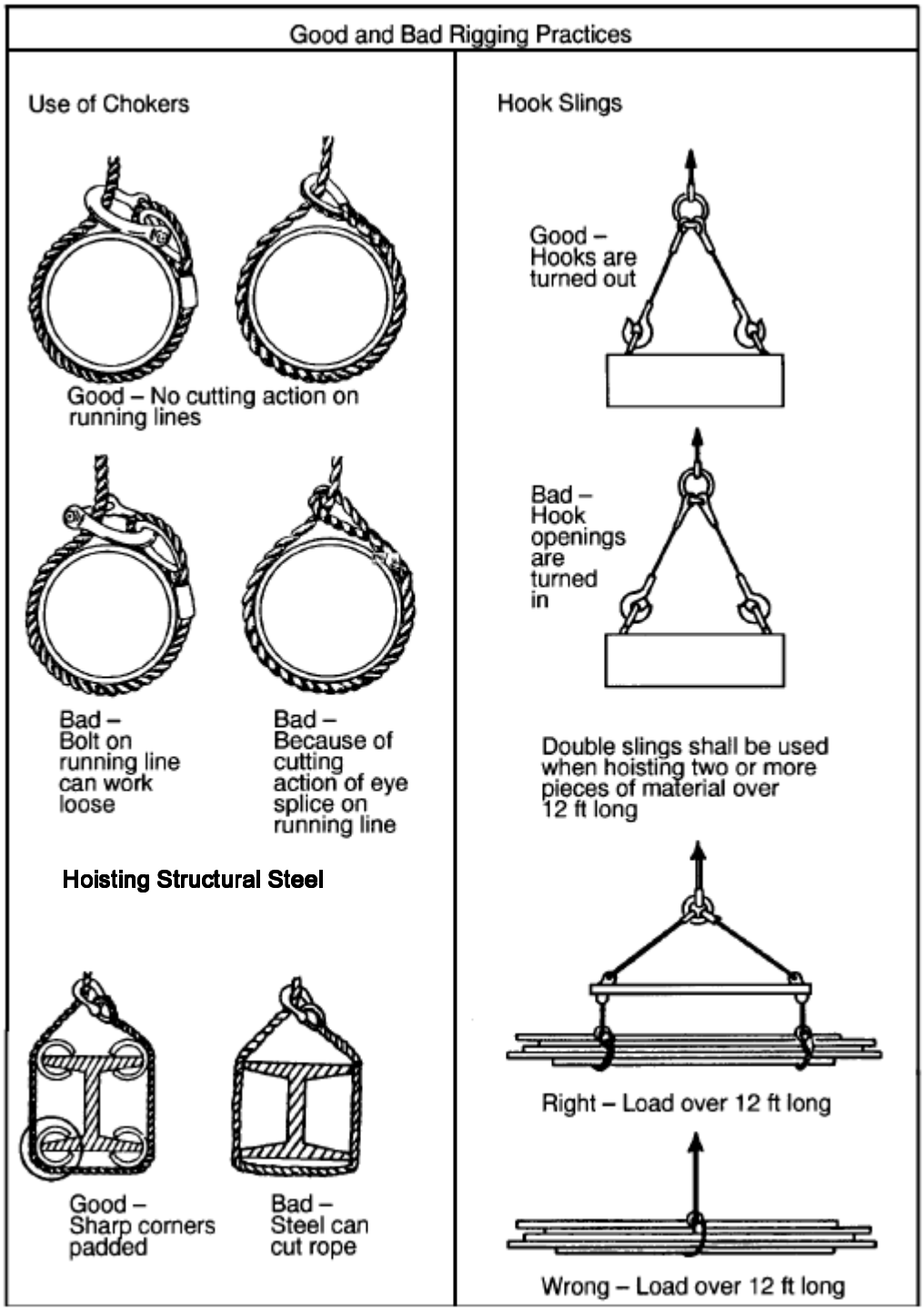

Figure 12-1. Good and bad rigging practices

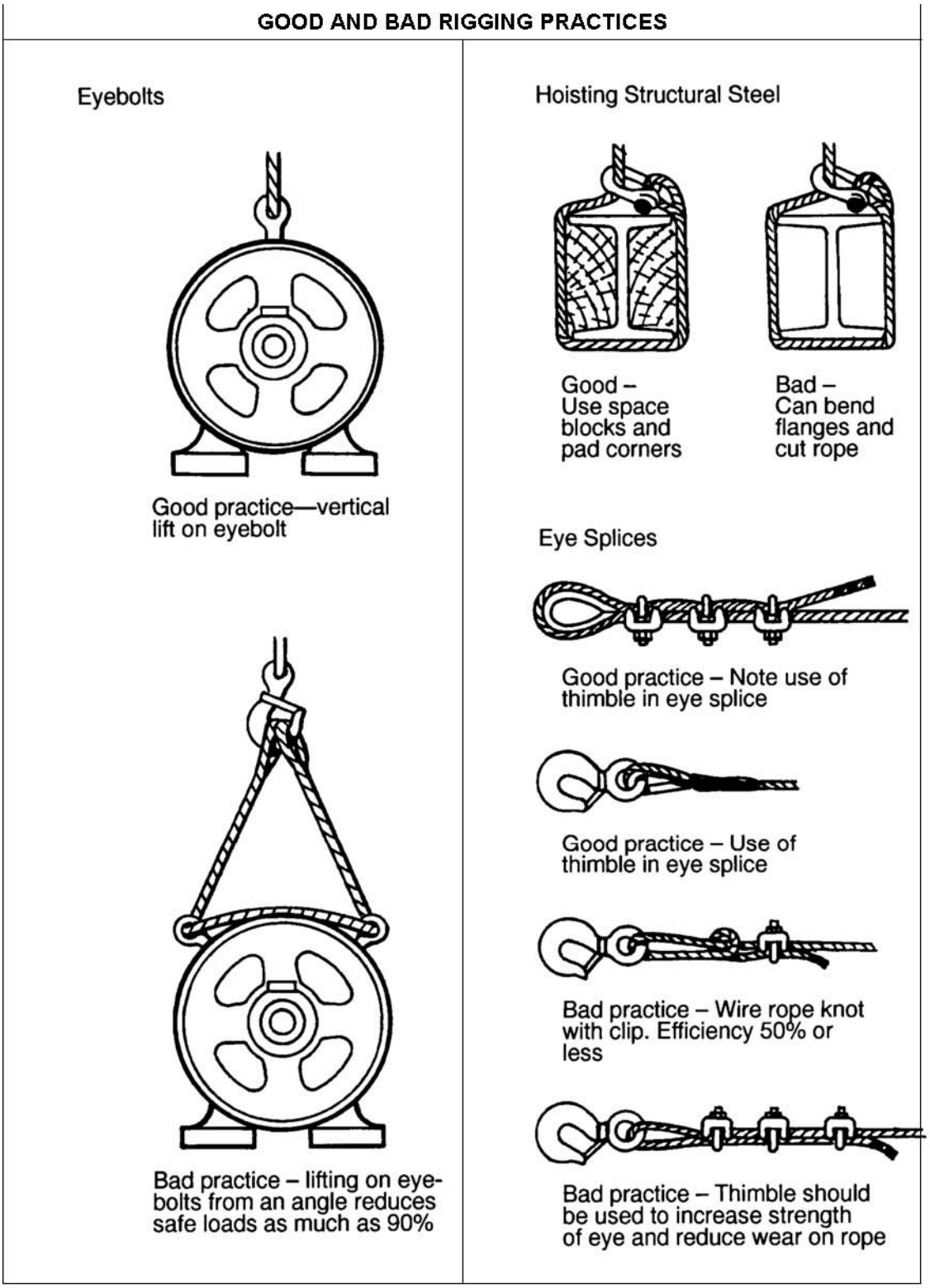

Figure 12-1. (continued).

12.2 RIGGING HOOKS

12.2.1 DESIGN

Hook design shall meet generally accepted hook design standards and shall comply with the requirements of ASME B30.10. (See Chapter 13, "Load Hooks," for equipment load hook requirements).

12.2.2 MARKING

The manufacturer's identification shall be forged, cast, or die-stamped on a low-stress and nonwearing area of the hook.

12.2.3 CONSTRUCTION

a. The hook material shall have sufficient ductility to permanently deform before failure at the temperature at which the hook will be used.

b. Rated capacities for hooks shall equal or exceed the rated capacity of the chain, wire rope, or other suspension members to which they are attached.

12.2.4 LOAD LIMITS

A hook shall not be loaded beyond its rated capacity, except as is necessary to conform to the requirements for load testing of the sling or hardware to which it is attached.

12.2.5 INSPECTIONS

12.2.5.1 Initial Inspection

a. A designated inspector shall inspect all new and repaired hooks prior to initial use. Dimensional data on the hooks shall be recorded to facilitate subsequent inspections for wear and throat openings. Dated and signed inspection records shall be kept on file and shall be readily available.

b. Inspection procedure and record keeping requirements for hooks in regular service shall be determined by the kind of equipment in which they are used. When such requirements for hooks are stated in standards for the specific equipment, they shall take precedence over the requirements of this section.

12.2.5.2 Daily Inspection

a. The operator or other designated person shall visually inspect hooks daily or prior to first use, if the hook is not in regular service, for the following (records are not required):

   1. Cracks, nicks, gouges.
   2. Deformation.
   3. Damage from chemicals.
   4. Damage, engagement, or malfunction of latch (if provided).
   5. Evidence of heat damage.

b. A designated person shall examine deficiencies and determine whether they constitute a safety hazard and whether a more detailed inspection is required.

12.2.5.3 Frequent Inspection

a. The operator or other designated personnel shall visually inspect the hook at the following intervals (records are not required):

   1. Normal service – monthly.
   2. Heavy service – weekly to monthly.
   3. Severe service – daily to weekly.

b. Hook service is defined as follows:

   1. Normal service – operation at less than 85 percent of rated capacity except for isolated instances.
   2. Heavy service – operation at 85 to 100 percent of rated capacity as a regular specified procedure.
   3. Severe service – operation at heavy service coupled with abnormal operating conditions.

c. These inspections shall, in addition to the requirements of Section 12.2.5.2, "Daily Inspection," include the following:

   1. Wear.
   2. Hook attachment and securing means.

d. A designated person shall examine deficiencies and determine whether a more detailed inspection is required.

12.2.5.4 Periodic Inspection

a. A designated inspector shall perform a complete inspection at the following intervals:

   1. Normal service – yearly.
   2. Heavy service – semiannually.
   3. Severe service – quarterly.

b. A designated inspector shall examine deficiencies and determine whether they constitute a safety hazard.

c. The inspection shall include the requirements of Section 12.2.5.3, "Frequent Inspection."

d. Hooks having any of the following conditions shall be removed from service until repaired or replaced:

   1. Any visibly apparent bend or twist from the plane of the unbent hook.
   2. Any distortion causing an increase in throat opening exceeding 5 percent not to exceed ¼ inch, (or as recommended by the manufacturer).
   3. Any wear exceeding 10 percent (or as recommended by the manufacturer) of the original section dimension of the hook.
   4. Cracks.

e. If a latch is provided and it becomes inoperative or fails to fully bridge the throat opening, the hook shall be removed from service until the device has been repaired or replaced

12.2.6 TESTING

a. Performance testing of hooks shall not be required except where necessary to conform to the requirements for the equipment of which they are part. When tests are specified, documentation shall be uniquely identified to the hook by serial number or other identifier.

b. If detailed inspections are performed (refer to Sections 12.2.5.2.b, 12.2.5.3.d, and 12.2.5.4.c), the results shall be evaluated by a designated person to determine the need for subsequent nondestructive testing (NDT). If NDT is deemed necessary, it shall be performed in accordance with Section 13.4.3.

12.2.7 MAINTENANCE

a. A designated person shall repair cracks, nicks, and gouges by grinding longitudinally, following the contour of the hook, provided that no dimension is reduced more than 10 percent of its original value (or as recommended by the manufacturer).

b. All other repairs shall be performed by the manufacturer.

12.2.8 OPERATION

The following shall apply to rigging hook users:

a. Determine that the load does not exceed the lesser of the rated capacity of the hook or the load rating of the equipment of which it is a part.,

b. Avoid shock loading.

c. Keep hands, fingers, and body from getting between the hook and the load.

d. Load shall be centered in the base of the hook to prevent point loading of the hook.

e. Hooks shall not be used in such a manner as to place a side load or back load on the hook.

f. When using a device to close the throat opening of the hook, care shall be taken that the load is not carried by the closing device

g. The use of a hook with a latch does not preclude the inadvertent detachment of a slack sling or a load from the hook. Visual verification of proper hook engagement is required in all cases.

h. Self-locking hooks shall be locked during use.

i. When a lock is equipped with a latch, the latch shall not be constrained from closing during use.

12.3 SHACKLES

12.3.1 GENERAL

a. Shackles are made of drop-forged steel bent into shape. The shackle shall have sufficient ductility to permanently deform before losing the ability to support the load at the temperatures at which the manufacturer has specified for use. They are strong, closed attachments that will not come unhooked. The size is specified by the diameter of the body. Side pulls on the shackle body are only permitted if the manufacturer has rated the shackle for that type of lift.

NOTE: Round pin shackles (restrained by cotter pin only) shall not be used for lifting.

b. Types:

1. Body types covered are anchor, chain, and synthetic sling (see Fig. 12.2).
2. Pin types covered are screw pin and bolt-type (see Fig. 12.2).
3. Shackles other than those detailed in this chapter shall be used only in accordance with recommendations of the shackle manufacturer or a qualified person.

c. Shackle pins shall fit free without binding. A bolt shall not be used as a substitute for a shackle pin. Figure 12-3 shows the components and typical inspection points of shackles.

d. Each shackle body shall be permanently and legible marked by the manufacturer. Raised or stamped letters on the side of the bow shall be used to show:

1. Manufacturer's name and trademark.
2. Size.
3. Rated capacity.

e. Pins for shackles manufactured after May 20, 2006 shall be marked by the manufacturer with raised or stamped letters showing:

1. Name or trademark of manufacturer
2. Grade, material type or load rating

f. When shackles are side loaded, the safe loading shall be reduced as specified by the manufacturer (See Figure 12-5).

g. Design Factor:

1. The design factor for shackles up to and including a 150 ton rated load shall be a minimum of 5:1.
2. The design factor for shackles over 150 ton rated load shall be a minimum of 4:1.

i. Rated load shall be in accordance with the recommendation of the shackle manufacturer. The terms “rated capacity” and “working load limit” are commonly used to describe rated load.

12.3.2 EFFECTS OF ENVIRONMENT

a. When shackles are to be used at temperatures above 400°F (204°C) or below -40°F (-40°C), the shackle manufacturer or a qualified person should be consulted.

b. The strength of shackles can be affected by chemically active environments such as caustic or acid substances or fumes. The shackle manufacturer or a qualified person should be consulted before shackles are used in chemically active environments.

12.3.3 TRAINING

Shackle users shall be trained in the selection, inspection, cautions to personnel, effects of environment, and rigging practices as covered by this standard.

12.3.4 INSPECTIONS

a. Initial Inspection

1. Prior to use, all new, altered, modified, or repaired shackles shall be inspected by a designated person to verify compliance with the applicable provisions of this chapter. Written records are not required.

b. Frequent Inspection

1. A visual inspection shall be performed by the user or other designated person each day before the shackle is used. Semi-permanent and inaccessible locations where frequent inspections are not feasible shall have periodic inspections performed.
2. Conditions such as those listed in Section 12.3.5 or any other condition that may result in a hazard shall cause the shackle to be removed from service. Shackles shall not be returned to service until approved by a qualified person.

3. Written records are not required.

c. Periodic Inspection:

1. A complete inspection of the shackle shall be performed by a designated person. The shackle shall be examined for conditions such as those listed in Section 12.3.5 and a determination made as to whether they constitute a hazard.

2. Periodic inspection intervals shall not exceed one year. The frequency of periodic inspections should be based on:

i. Frequency of use.

ii. Severity of service conditions.

iii. Nature of lifts being made.

iv. Experience gained on the service life of shackles used in similar circumstances.

3. Guidelines for the time intervals are:

i. Normal service – yearly.

ii. Severe service – monthly to quarterly.

iii. Special service – as recommended by a qualified person.

4. Written records are not required.

12.3.5 REMOVAL CRITERIA

a. Shackles shall be removed from service if damage such as the following is visible, and shall only be returned to service when approved by a qualified person:

1. Missing or illegible manufacturer's name or trademark and/or rated load identification.

2. Indications of heat damage including welding spatter or arc strikes.

3. Excessive pitting or corrosion

4. Bent, twisted, distorted, stretched, elongated, cracked, or broken load-bearing components

5. Excessive nicks or gouges

6. A 10% reduction of the original or catalog dimension at any point around the body or pin.

7. Incomplete pin engagement

8. Excessive thread damage.

9. Evidence of unauthorized welding.

10. Other conditions, including visible damage, that cause doubt as to the continued use of the shackle..

12.3.6 REPAIRS

a. Repairs, alterations, or modifications shall be as specified by the shackle manufacturer or a qualified person.

b. Replacement parts shall meet or exceed the original equipment manufacturer's specifications.

12.3.7 CRITICAL LIFTS

a. See Chapter 2, "Critical Lifts," for critical lift requirements.

b. Shackles used for critical-lift service shall have an initial proof load test of 200 percent of the rated capacity. Test loads shall be accurate to within -5 percent, +0 percent of stipulated values. If proof testing cannot be verified, the shackle(s) shall be proof tested before being used to make a critical lift.

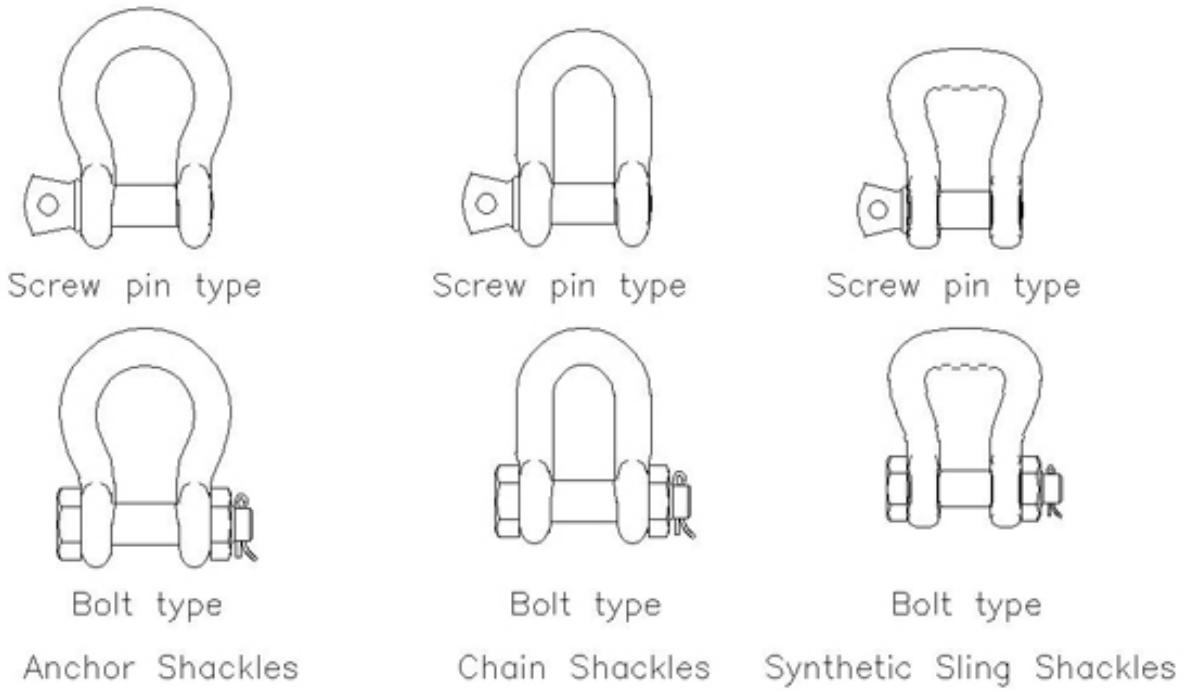

Reprinted from ASME B30.26-2004 by permission of The American Society of Mechanical Engineers. All rights reserved.

Figure 12-2. Shackle Types

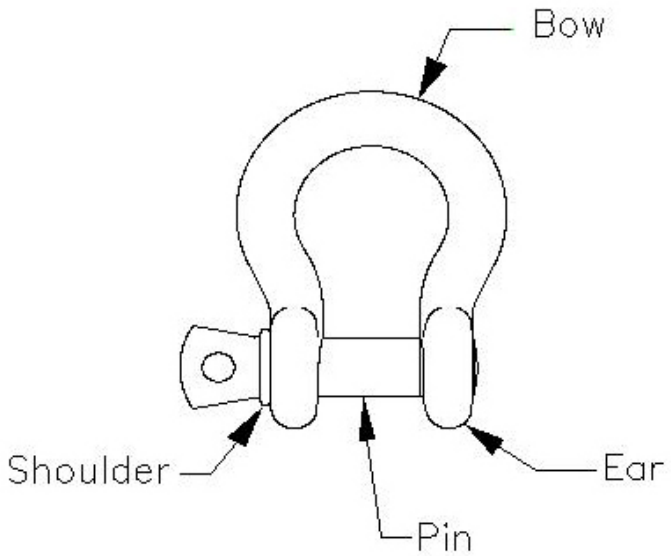

Reprinted from ASME B30.26-2004 by permission of The American Society of Mechanical Engineers. All rights reserved.

Figure 12-3. Typical Shackle Inspection Points

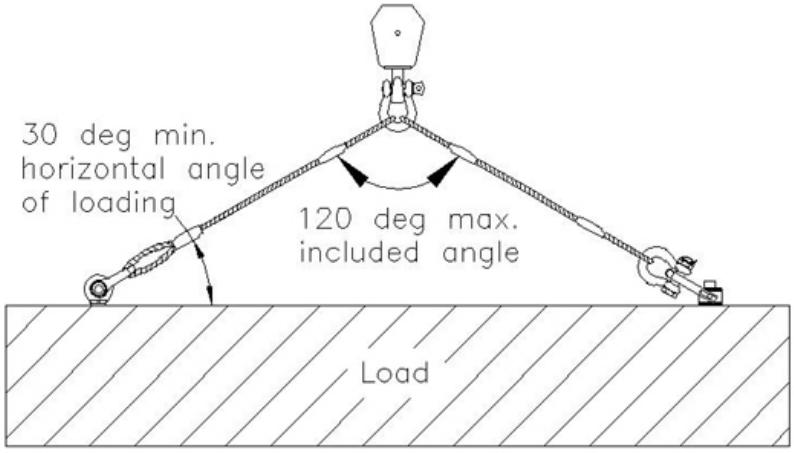

Horizontal Angle, deg.	Load Multiplier
90	1.000
60	1.155
45	1.414
30	2.000

Reprinted from ASME B30.26-2004 by permission of The American Society of Mechanical Engineers. All rights reserved.

Figure 12-4. Effect of Loading Angle

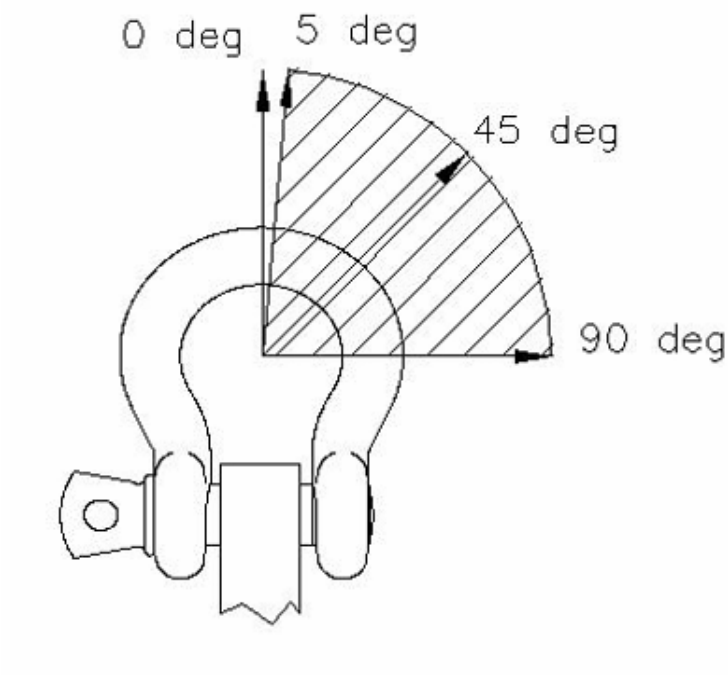

Reprinted from ASME B30.26-2004 by permission of The American Society of Mechanical Engineers. All rights reserved.

Figure 12-5. Side Loading

12.4 EYEBOLTS

12.4.1 GENERAL

a. This section specifies requirements for eyebolts that are used as rigging hardware during normal hoisting and rigging activities.

b. Eyebolts used for hoisting shall be fabricated from forged carbon or alloy steel and shall have sufficient ductility to permanently deform before losing the ability to support the load at temperatures at which the manufacturer has specified for use.

c. Each eyebolt shall be marked to show:

   1. Name or trademark of manufacturer.

   2. Size or rated load.

   3. Grade for alloy eyebolts.

d. Eyebolts shall have a minimum design factor of 5:1.

e. Only shouldered eyebolts shall be used for rigging hardware, except when prohibited by the configuration of the item to be lifted. Where non-shouldered eyebolts are required, they shall only be used in vertical pulls or in rigging systems that are designed and approved by a qualified person.

f. Nuts, washers, and drilled plates shall not be used or assembled to make shouldered eyebolts.

g. Wire-type or welded eyebolts shall not be used.

h. Shoulders shall seat uniformly, snugly and flush against the surface on which they bear (See Fig. 12-6).

i. When eyebolts cannot be properly seated and aligned, a steel washer or spacer with the smallest inside diameter that will fit the eyebolt shank may be used to put the plane of the eye in the direction of the load when the shoulder is seated. The washer or spacer shall not exceed one thread pitch in thickness or as recommended by the manufacturer.

j. Eyebolts shall be tightened or otherwise secured against rotation during the lift.

k. When used in a tapped blind hole, the effective thread length shall be at least one and one half times the diameter of the bolt for engagement in steel (see Fig. 12-6). For other thread engagements or engagement in other materials, contact the eyebolt manufacturer or qualified person.

l. When used in a tapped through-hole of less than one and one half diameter thickness, a nut shall be used under the load and shall be fully engaged and tightened securely against the load (see Fig. 12-6).

m. Only shouldered eyebolts shall be used for angular loading. The shoulder shall be securely tightened against the load and the eye shall be aligned with the direction of the loading. The working load limit shall be reduced as recommended by the manufacturer.

n. Shock loading shall be avoided.

12.4.2 EFFECTS OF ENVIRONMENT

a. When alloy steel eyebolts are to be used at temperatures above 400°F (204°C) or below-40°F (-40°C), the eyebolt manufacturer or a qualified person should be consulted.

b. Carbon steel eyebolts shall not be used at temperatures above 275°F (135°C) or below 30° F (-1°C) unless approved by manufacturer or a qualified person.

c. The strength of eyebolts can be affected by chemically active environments such as caustic or acid substances or fumes. The eyebolt manufacturer or a qualified person should be consulted before eyebolts are used in chemically active environments.

12.4.3 TRAINING

Eyebolt users shall be trained in the selection, inspection, cautions to personnel, effects of environment, and rigging practices as covered by this standard.

12.4.4 INSPECTIONS

a. Initial Inspection

   1. Prior to use, all new, altered, modified, or repaired eyebolts shall be inspected by a designated person to verify compliance with the applicable provisions of this chapter. Written records are not required.

b. Frequent Inspection

   1. A visual inspection shall be performed by the user or other designated person each shift before the eyebolt is used. Semi-permanent and inaccessible locations where frequent inspections are not feasible shall have periodic inspections performed.

2. Conditions such as those listed in Section 12.4.5 or any other condition that may result in a hazard shall cause the eyebolt to be removed from service. Eyebolts shall not be returned to service until approved by a qualified person.

3. Written records are not required.

c. Periodic Inspection:

1. A complete inspection of the eyebolt shall be performed by a designated person. The eyebolt shall be examined for conditions such as those listed in Section 12.4.5 and a determination made as to whether they constitute a hazard.

2. Periodic inspection intervals shall not exceed one year. The frequency of periodic inspections should be based on:

v. Frequency of use.

vi. Severity of service conditions.

vii. Nature of lifts being made.

viii. Experience gained on the service life of eyebolts used in similar circumstances.

3. Guidelines for the time intervals are:

i. Normal service – yearly.

ii. Severe service – monthly to quarterly.

iii. Special service – as recommended by a qualified person.

4. Written records are not required.

12.4.5 REMOVAL CRITERIA

Eyebolts shall be removed from service if damage such as the following is visible, and shall only be returned to service when approved by a qualified person:

a. Missing or illegible manufacturer's name or trademark and/or rated load identification.

b. Indications of heat damage including welding spatter or arc strikes.

c. Excessive pitting or corrosion.

d. Bent, twisted, distorted, stretched, elongated, cracked, or broken load-bearing components.

e. Excessive nicks or gouges.

f. A 10% reduction of the original or catalog dimension at any point around the body or pin.

g. Excessive thread damage or wear.

h. Evidence of unauthorized welding or modification

i. Other conditions, including visible damage, that cause doubt as to continue use.

12.4.6 REPAIRS

a. Repairs, alterations, or modifications shall be as specified by the eyebolt manufacturer or a qualified person.

b. Replacement parts shall meet or exceed the original equipment manufacturer's specifications.

12.4.7 CRITICAL LIFTS

a. See Chapter 2, "Critical Lifts," for critical lift requirements.

b. Eyebolts used for critical-lift service shall have an initial proof test of 200 percent of the rated capacity. Test loads shall be accurate to within -5 percent, +0 percent of stipulated values. If proof testing cannot be verified, the eyebolts shall be proof tested before being used to make a critical lift

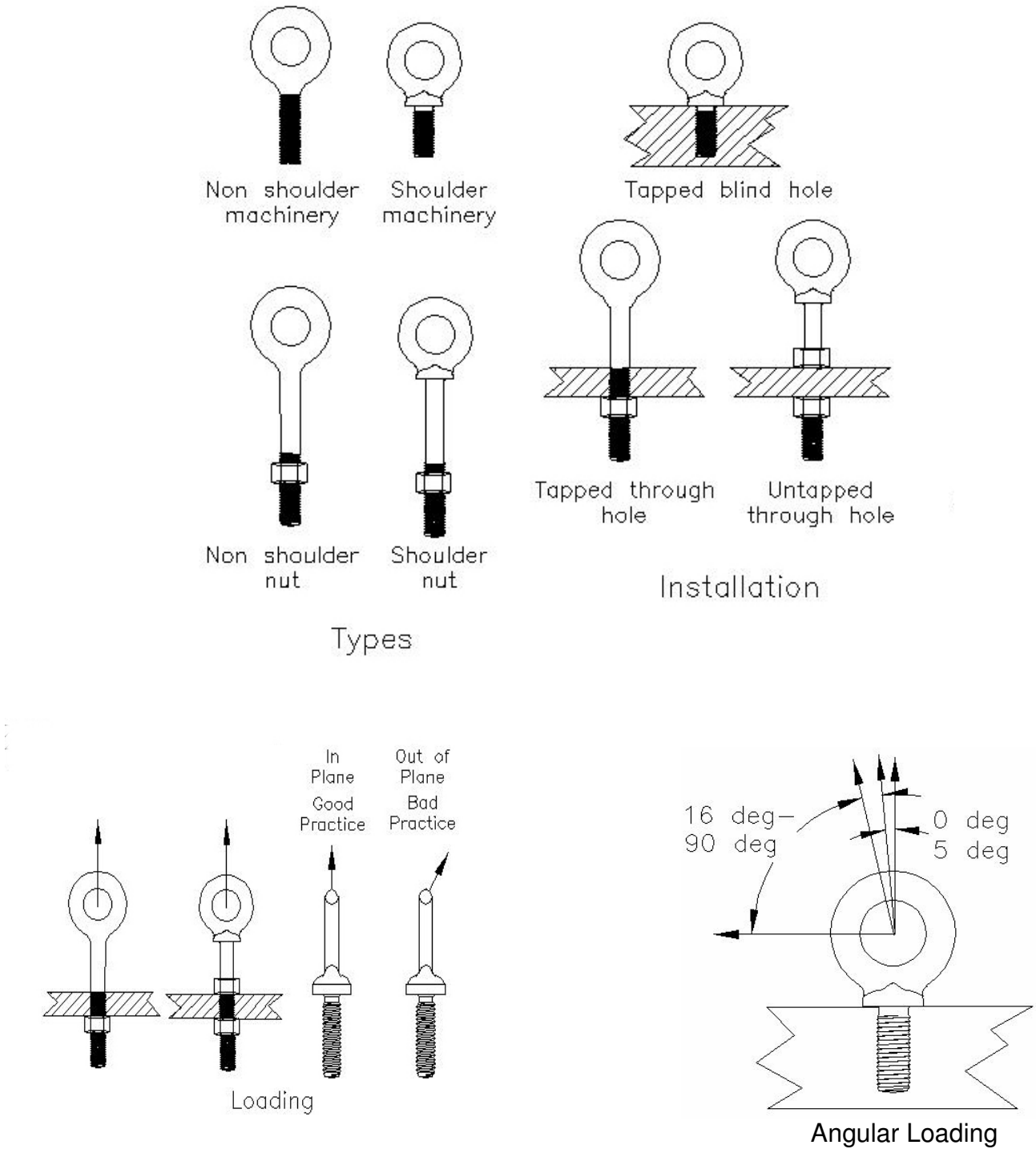

Reprinted from ASME B30.26-2004 by permission of The American Society of Mechanical Engineers. All rights reserved.

Figure 12-6. Eyebolts

12.5 EYE NUTS

12.5.1 GENERAL

a. This section specifies requirements for eye nuts that are used as rigging hardware during normal hoisting and rigging activities.

b. Eye nuts used for hoisting shall have sufficient ductility to permanently deform before losing the ability to support the load at temperatures at which the manufacturer has specified for use.

c. Each eye nut shall be marked to show:

   1. Name or trademark of manufacturer.

   2. Size or rated load.

d. Eye nuts shall have a minimum design factor of 5:1.

e. Eye nuts shall be secured against rotation during the lift.

f. The threads of the eye nut shall be fully engaged (See Fig. 12-7).

g. Eye nuts shall only be used for in-line loads.

h. The plane of the eye may be positioned with a flat washer(s) or lock nut.

i. Shock loading should be avoided.

12.5.2 EFFECTS OF ENVIRONMENT

a. When eye nuts are to be used at temperatures above 400°F (204°C) or below-40°F (-40°C), the eye nut manufacturer or a qualified person should be consulted.

b. The strength of eye nuts can be affected by chemically active environments such as caustic or acid substances or fumes. The eye nut manufacturer or a qualified person should be consulted before eye nuts are used in chemically active environments.

12.5.3 TRAINING

Eye nut users shall be trained in the selection, inspection, cautions to personnel, effects of environment, and rigging practices as covered by this standard.

12.5.4 INSPECTIONS

a. Initial Inspection

   1. Prior to use, all new, altered, modified, or repaired eye nuts shall be inspected by a designated person to verify compliance with the applicable provisions of this chapter. Written records are not required.

b. Frequent Inspection

   1. A visual inspection shall be performed the user or other designated person each shift before the eye nut is used. Semi-permanent and inaccessible locations where frequent inspections are not feasible shall have periodic inspections performed.

   2. Conditions such as those listed in Section 12.5.5. or any other condition that may result in a hazard shall cause the eye nut to be removed from service. Eye nuts shall not be returned to service until approved by a qualified person.

   3. Written records are not required.

c. Periodic Inspection:

   1. A complete inspection of the eye nut shall be performed by a designated person. The eye nut shall be examined for conditions such as those listed in Section 12.5.5 and a determination made as to whether they constitute a hazard.

   2. Periodic inspection intervals shall not exceed one year. The frequency of periodic inspections should be based on:

      i. Frequency of use.

      ii. Severity of service conditions.

      iii. Nature of lifts being made.

      iv. Experience gained on the service life of eye nuts used in similar circumstances.

   3. Guidelines for the time intervals are:

      i. Normal service – yearly.

      ii. Severe service – monthly to quarterly.

      iii. Special service – as recommended by a qualified person.

d. Written records are not required.

12.5.5 REMOVAL CRITERIA

Eye nuts shall be removed from service if damage such as the following is visible, and shall only be returned to service when approved by a qualified person:

a. Missing or illegible manufacturer's name or trademark and/or rated load identification.

b. Indications of heat damage including welding spatter or arc strikes.

c. Excessive pitting or corrosion.

d. Bent, twisted, distorted, stretched, elongated, cracked, or broken load-bearing components.

e. Excessive nicks or gouges.

f. A 10% reduction of the original or catalog dimension at any point around the body or pin.

g. Excessive thread damage or wear.

h. Evidence of unauthorized welding or modification

i. Other conditions, including visible damage, that cause doubt as to continue use.

12.5.6 REPAIRS

a. Repairs, alterations, or modifications shall be as specified by the eye nut manufacturer or a qualified person.

b. Replacement parts shall meet or exceed the original equipment manufacturer's specifications.

12.5.7 CRITICAL LIFTS

a. See Chapter 2, "Critical Lifts," for critical lift requirements.

b. Eye nuts used for critical-lift service shall have an initial proof test of 200 percent of the rated capacity. Test loads shall be accurate to within -5 percent, +0 percent of stipulated values. If proof testing cannot be verified, the eye nut shall be proof tested before being used to make a critical lift.

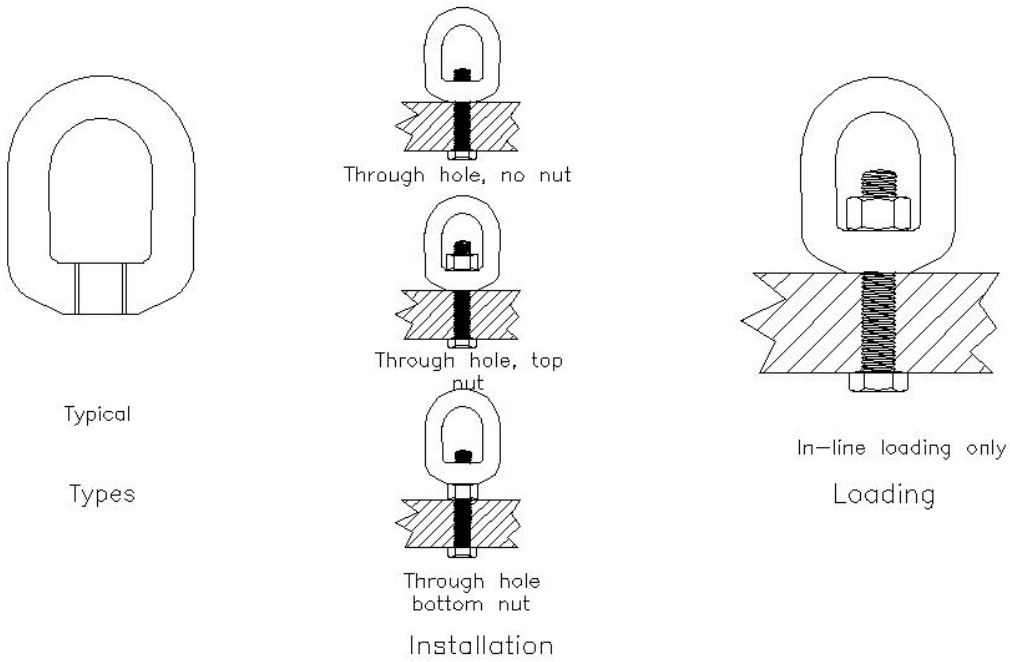

Reprinted from ASME B30.26-2004 by permission of The American Society of Mechanical Engineers. All rights reserved.

Figure 12-7. Eye Nuts

12.6 TURNBUCKLES

12.6.1 GENERAL

a. Turnbuckles include open and pipe bodies and have hook, eye, jaw, or stub end fittings (See Figure 12-8). Before each use, turnbuckles shall be inspected for damage. Damaged threads, jamb nuts, or bent frame members make the unit unsuitable for use.

b. Turnbuckles shall be fabricated from material of sufficient ductility to permanently deform before losing the ability to support the load within the temperature range that the manufacture specified and shall have a minimum design factor of 5:1.

c. Each turnbuckle body shall be permanently and legibly marked by the manufacturer to show:

   1. Manufacturer's name or trademark.

   2. Size or rated load.

12.6.2 OPERATING PRACTICES:

a. Turnbuckle end fitting threads shall be fully engaged in the body threads.

b. Components, including pins, bolts, nuts, or cotter pins used with jaw ends, shall be in good working condition prior to use.

c. Contact with obstructions that could damage or bend the turnbuckle should be avoided.

d. Shock loading should be avoided.

e. The load applied to the turnbuckle should be in line and in tension.

f. When turnbuckles are used at load angles other than 90 degrees, the safe-load rating shall be reduced per the manufacturer's recommendations.

g. Turnbuckles should not be side loaded.

h. Turnbuckles used in applications where there is vibration shall be secured to the frame with locks, pins, or wires to prevent turning or loosening.

i. Turnbuckles should be rigged or secured to prevent unscrewing during the lift.

j. For long-term installations, turnbuckles shall be secured to prevent unscrewing.

k. Turnbuckles should not be dragged on and an abrasive surface.

l. Turnbuckles should be adjusted with a properly sized wrench, used on the flats of the turnbuckle body.

12.6.3 EFFECTS OF ENVIRONMENT

a. When a turnbuckle is to be used at temperatures above 400°F (204°C) or below-40°F (-40°C), the turnbuckle manufacturer or a qualified person should be consulted.

b. The strength of turnbuckles can be affected by chemically active environments such as caustic or acid substances or fumes. The turnbuckle manufacturer or a qualified person should be consulted before turnbuckles are used in chemically active environments.

12.6.4 TRAINING

Turnbuckle users shall be trained in the selection, inspection, cautions to personnel, effects of environment, and rigging practices as covered by this standard.

12.6.5 INSPECTIONS

a. Initial Inspection

   1. Prior to use, all new, altered, modified, or repaired turnbuckles shall be inspected by a designated person to verify compliance with the applicable provisions of this chapter. Written records are not required.

b. Frequent Inspection

   1. A visual inspection shall be performed the user or other designated person each shift before the turnbuckle is used. Semi-permanent and inaccessible locations where frequent inspections are not feasible shall have periodic inspections performed.

   2. Conditions such as those listed in Section 12.6.6 or any other condition that may result in a hazard shall cause the turnbuckle to be removed from service. Turnbuckles shall not be returned to service until approved by a qualified person.

   3. Written records are not required.

c. Periodic Inspection:

   1. A complete inspection of the turnbuckle shall be performed by a designated person. The turnbuckle shall be examined for conditions such as those listed in Section

12.6.6.and a determination made as to whether they constitute a hazard.

2. Periodic inspection intervals shall not exceed one year. The frequency of periodic inspections should be based on:
   i. Frequency of use.
   ii. Severity of service conditions.
   iii. Nature of lifts being made.
   iv. Experience gained on the service life of turnbuckles used in similar circumstances.
3. Guidelines for the time intervals are:
   i. Normal service – yearly.
   ii. Severe service – monthly to quarterly.
   iii. Special service – as recommended by a qualified person.
4. Written records are not required.

12.6.6 REMOVAL CRITERIA

Turnbuckles shall be removed from service if damage such as the following is visible, and shall only be returned to service when approved by a qualified person:

a. Missing or illegible manufacturer's name or trademark and/or rated load identification.

b. Indications of heat damage including welding spatter or arc strikes.

c. Excessive pitting or corrosion.

d. Bent, twisted, distorted, stretched, elongated, cracked, or broken load-bearing components.

e. Excessive nicks or gouges.

f. A 10% reduction of the original or catalog dimension at any point.

g. Excessive thread damage or wear.

h. Evidence of unauthorized welding or modification

i. Other conditions, including visible damage, that cause doubt as to continue use.

12.6.7 REPAIRS

a. Repairs, alterations, or modifications shall be as specified by the turnbuckle manufacturer or a qualified person.

b. Replacement parts shall meet or exceed the original equipment manufacturer's specifications.

12.6.8 CRITICAL LIFTS

a. See Chapter 2, "Critical Lifts," for critical lift requirements.

b. Turnbuckles used for critical-lift service shall have an initial proof test of 200 percent of the rated capacity. Test loads shall be accurate to within -5 percent, +0 percent of stipulated values. If proof testing cannot be verified, the turnbuckles shall be proof tested before being used to make a critical lift. If proof tested, turnbuckles shall be inspected after the test for the removal conditions stated above.

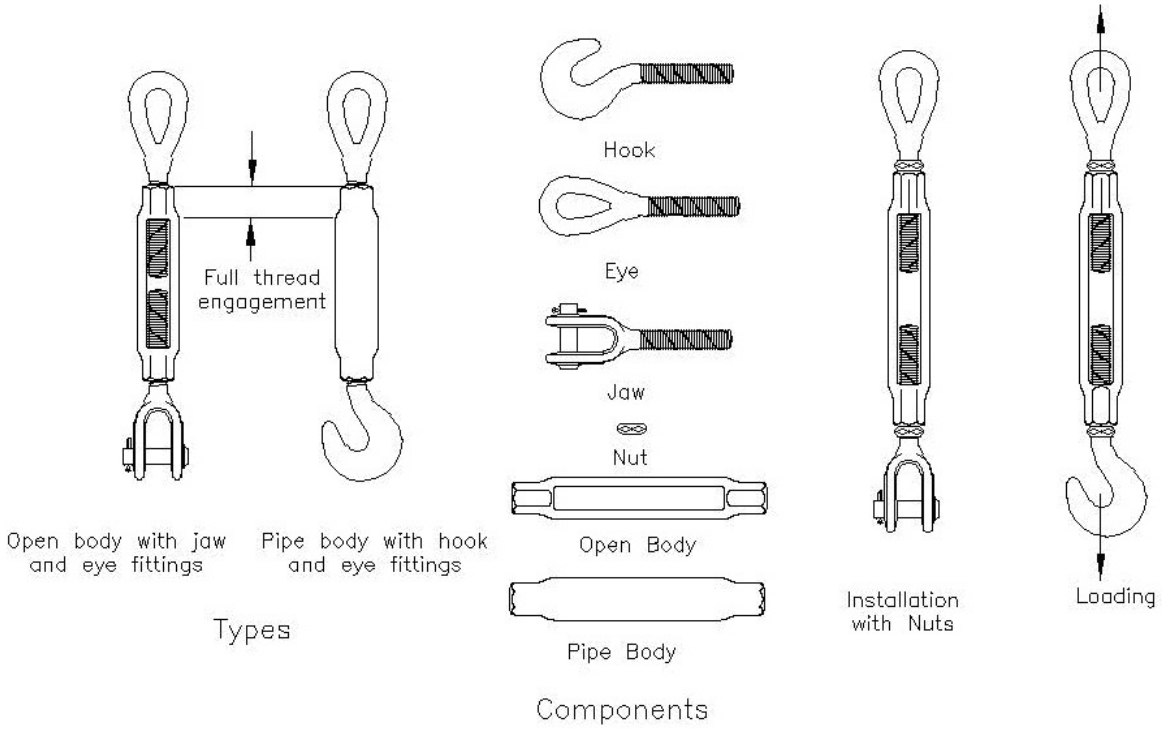

Reprinted from ASME B30.26-2004 by permission of The American Society of Mechanical Engineers. All rights reserved.

Figure 12-8. Turnbuckles

12.7 LINKS, RINGS AND SWIVELS

12.7.1 GENERAL

a. Links, rings and swivels are usually designed and manufactured as a part of the lifting hardware for a specific purpose, such as the peak link on multiple-leg slings positioning. However, the rings and links may also be found on the load-attachment end of slings. Figure 12-9 shows typical rings, links and swivels.

b. Links, rings and swivels shall be fabricated from material of sufficient ductility to permanently deform before losing the ability to support the load within the temperature range specified by the manufacturer, and shall have a minimum design factor of 5:1.

c. Each link, ring or swivel body shall be permanently and legibly marked by the manufacturer to show:

   1. Manufacturer's name or trademark.
   2. Size or rated load.
   3. Grade, if required to identify rated load.

12.7.2 OPERATING PRACTICES:

a. Contact with obstructions that could damage the link, ring, or swivel should be avoided.

b. Shock loading should be avoided.

c. The load applied to the link, ring or swivel should be in line and in tension.

d. Links, rings and swivels should not be side loaded.

e. Links, rings and swivels should not be dragged on any abrasive surface.

f. The link, ring or swivel shall be of proper shape and size to ensure that it seats properly in the hook or lifting device.

12.7.3 EFFECTS OF ENVIRONMENT

a. When link, rings or swivels are to be used at temperatures above 400°F (204°C) or below-40°F (-40°C), the link, ring or swivel manufacturer or a qualified person should be consulted.

b. The strength of link, rings or swivels can be affected by chemically active environments such as caustic or acid substances or fumes. The link, ring or swivel manufacturer or a qualified person should be consulted before links, rings or swivels are used in chemically active environments.

12.7.4 TRAINING

Link, ring or swivel users shall be trained in the selection, inspection, cautions to personnel, effects of environment, and rigging practices as covered by this standard.

12.7.5 INSPECTIONS

a. Initial Inspection

   1. Prior to use, all new, altered, modified, or repaired link, ring or swivel shall be inspected by a designated person to verify compliance with the applicable provisions of this chapter. Written records are not required.

b. Frequent Inspection

   1. A visual inspection shall be performed the user or other designated person each shift before the link, ring or swivel is used. Semi-permanent and inaccessible locations where frequent inspections are not feasible shall have periodic inspections performed.
   2. Conditions such as those listed in Section 12.7.6 or any other condition that may result in a hazard shall cause the link, ring or swivel to be removed from service. Links, rings or swivels shall not be returned to service until approved by a qualified person.
   3. Written records are not required.

c. Periodic Inspection:

   1. A complete inspection of the link, ring, or swivel shall be performed by a designated person. The links, rings or swivels shall be examined for conditions such as those listed in Section 12.7.6 and a determination made as to whether they constitute a hazard.
   2. Periodic inspection intervals shall not exceed one year. The frequency of periodic inspections should be based on:

      i. Frequency of use.
      ii. Severity of service conditions.
      iii. Nature of lifts being made.
      iv. Experience gained on the service life of links, rings or swivels used in similar circumstances.

3. Guidelines for the time intervals are:
   i. Normal service – yearly.
   ii. Severe service – monthly to quarterly.
   iii. Special service – as recommended by a qualified person.
4. Written records are not required.

12.7.6 REMOVAL CRITERIA

Links, rings or swivels shall be removed from service if damage such as the following is visible, and shall only be returned to service when approved by a qualified person:

a. Missing or illegible manufacturer's name or trademark and/or rated load identification.

b. Indications of heat damage including welding spatter or arc strikes.

c. Excessive pitting or corrosion.

d. Bent, twisted, distorted, stretched, elongated, cracked, or broken load-bearing components.

e. Excessive nicks or gouges.

f. A 10% reduction of the original or catalog dimension at any point.

g. Excessive thread damage or wear.

h. Evidence of unauthorized welding or modification

i. For swivels, lack of ability to freely rotate when not loaded

j. For swivels, loose or missing nuts, bolts, cotter pins, snap rings, or other fasteners or retaining devices

k. Other conditions, including visible damage, that cause doubt as to continue use.

12.7.7 REPAIRS

a. Repairs, alterations, or modifications shall be as specified by the link, ring or swivel manufacturer or a qualified person.

b. Replacement parts shall meet or exceed the original equipment manufacturer's specifications.

12.7.8 CRITICAL LIFTS

a. See Chapter 2, "Critical Lifts," for critical lift requirements.

b. Links, rings and swivels used for critical-lift service shall have an initial proof load test of 200 percent of the rated capacity. Test loads shall be accurate to within -5 percent, +0 percent of stipulated values. If proof testing cannot be verified, the links and/or rings shall be proof tested before being used to make a critical lift. If proof-tested, the link, rink or swivel shall be inspected after the test for the removal conditions stated above.

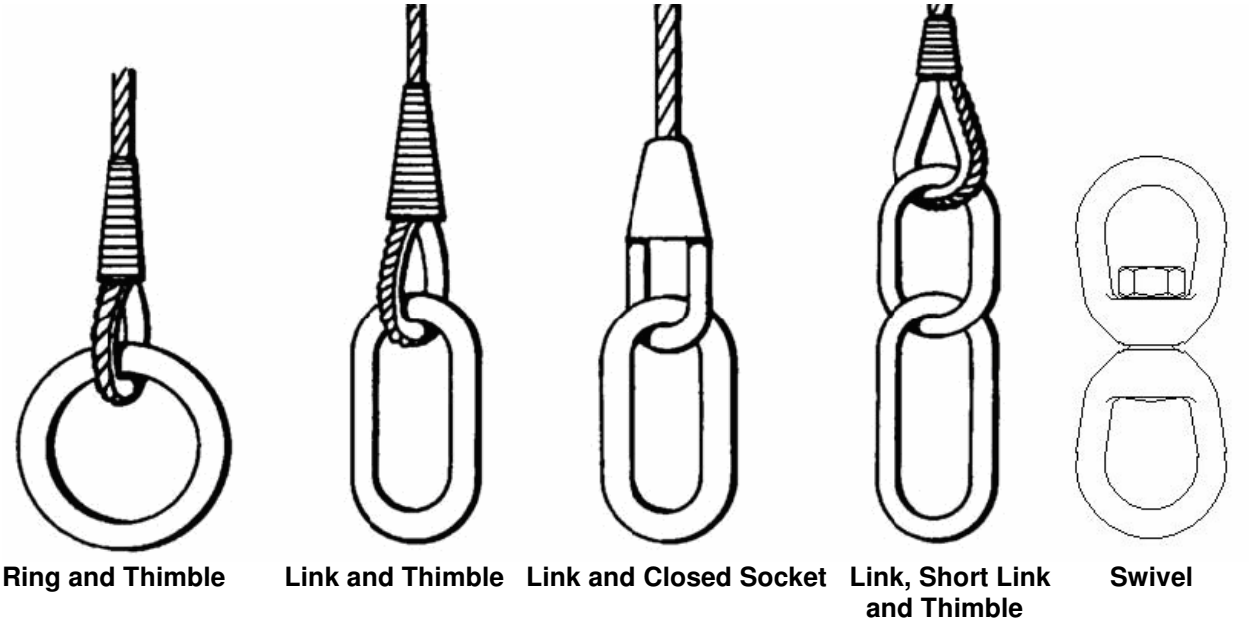

Figure 12-9. Ring, Links and Swivels

12.8 SWIVEL HOIST RINGS

12.8.1 GENERAL

a. This section specifies requirements for swivel hoist rings that are used as rigging hardware during hoisting and rigging activities.

b. Swivel hoist rings, excluding bushings and bearings, shall have sufficient ductility to permanently deform before losing the ability to support the load at temperatures at which the manufacturer has specified for use.

c. Each swivel hoist ring shall be marked to show:

1. Name or trademark of manufacturer.
2. Size or rated load.
3. Torque value.

d. Swivel hoist rings shall have a minimum design factor of 5:1.

e. When used in a threaded hole, the effective thread length shall be at least one and one half times the diameter of the bolt for engagement in steel (see Fig. 12-10). For other thread engagements or engagement in other materials, contact the swivel hoist ring manufacturer or qualified person.

f. When used in a through-hole application, a nut and washer shall be used. The washer and nut shall be in accordance with the swivel hoist ring manufacturer's recommendations. The nut shall be fully engaged (see Fig. 12-10).

g. The bushing flange (Fig. 12-10) shall fully contact the load surface.

h. Spacers or washers shall not be used between the bushing and the mounting surface of the load being lifted.

i. The swivel hoist ring shall be tightened to the manufacturer's torque specifications.

j. The swivel hoist ring shall be free to rotate and pivot without interference during lifting (see Fig. 12-11).

k. The load applied to the swivel hoist ring shall be centered in the bail to prevent side loading.

l. Any attached lifting component shall be narrower than the inside width of the bail to avoid spreading (see Fig. 12-11).

m. Ensure that the swivel hoist ring working load limit meets or exceeds the anticipated angular rigging tension (see Fig. 12-11).

n. Shock loading should be avoided.

12.8.2 EFFECTS OF ENVIRONMENT

a. When swivel hoist rings are to be used at temperatures above 400°F (204°C) or below-20°F (-40°C), the swivel hoist ring manufacturer or a qualified person should be consulted.

b. The strength of swivel hoist rings can be affected by chemically active environments such as caustic or acid substances or fumes. The swivel hoist ring manufacturer or a qualified person should be consulted before swivel hoist rings are used in chemically active environments.

12.8.3 TRAINING

Swivel hoist ring users shall be trained in the selection, inspection, cautions to personnel, effects of environment, and rigging practices as covered by this standard.

12.8.4 INSPECTIONS

a. Initial Inspection

1. Prior to use, all new, altered, modified, or repaired swivel hoist rings shall be inspected by a designated person to verify compliance with the applicable provisions of this chapter. Written records are not required.

b. Frequent Inspection

1. A visual inspection shall be performed the user or other designated person each shift before the swivel hoist ring is used. Semi-permanent and inaccessible locations where frequent inspections are not feasible shall have periodic inspections performed.
2. Conditions such as those listed in Section 12.8.5 or any other condition that may result in a hazard shall cause the swivel hoist ring to be removed from service. Swivel hoist rings shall not be returned to service until approved by a qualified person.
3. Written records are not required.

c. Periodic Inspection:

1. A complete inspection of the swivel hoist ring shall be performed by a designated person. The swivel hoist ring shall be examined for conditions such as those listed

in Section 12.8.5 and a determination made as to whether they constitute a hazard.

2. Periodic inspection intervals shall not exceed one year. The frequency of periodic inspections should be based on:

   i. Frequency of use.

   ii. Severity of service conditions.

   iii. Nature of lifts being made.

   iv. Experience gained on the service life of swivel hoist rings used in similar circumstances.

4. Guidelines for the time intervals are:

   i. Normal service – yearly.

   ii. Severe service – monthly to quarterly.

   iii. Special service – as recommended by a qualified person.

5. Written records are not required.

12.8.5 REMOVAL CRITERIA

Swivel hoist rings shall be removed from service if damage such as the following is visible, and shall only be returned to service when approved by a qualified person:

a. Missing or illegible manufacturer's name or trademark and/or rated load identification.

b. Indications of heat damage including welding spatter or arc strikes.

c. Excessive pitting or corrosion.

d. Bent, twisted, distorted, stretched, elongated, cracked, or broken load-bearing components.

e. Excessive nicks or gouges.

f. A 10% reduction of the original or catalog dimension at any point.

g. Excessive thread damage or wear.

h. Evidence of unauthorized welding or modification

i. Lack of the ability to freely rotate or pivot

j. Other conditions, including visible damage, that cause doubt as to continue use.

12.8.6 REPAIRS

a. Repairs, alterations, or modifications shall be as specified by the swivel hoist ring manufacturer or a qualified person.

b. Replacement parts shall meet or exceed the original equipment manufacturer's specifications.

12.8.7 CRITICAL LIFTS

a. See Chapter 2, "Critical Lifts," for critical lift requirements.

b. Swivel hoist rings used for critical-lift service shall have an initial proof test of 200 percent of the rated capacity or as recommended by the manufacturer. Test loads shall be accurate to with -5 percent, +0 percent of stipulated values. If proof testing cannot be verified, the swivel hoist rings shall be proof tested before being used to make a critical lift.

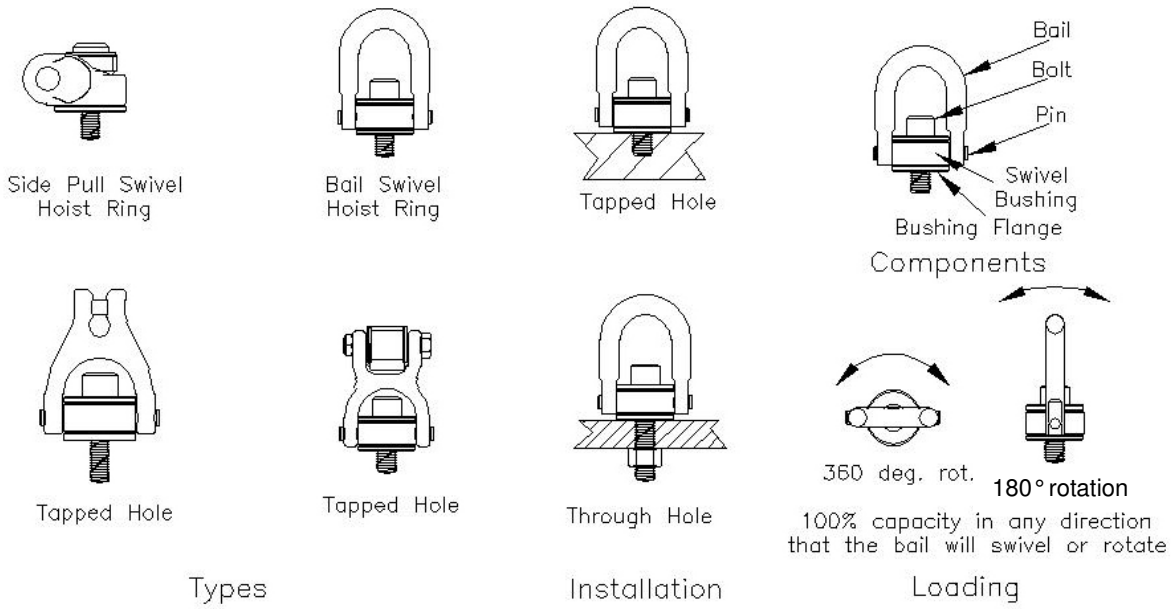

Reprinted from ASME B30.26-2004 by permission of The American Society of Mechanical Engineers. All rights reserved.

Figure 12-10. Swivel Hoist Rings

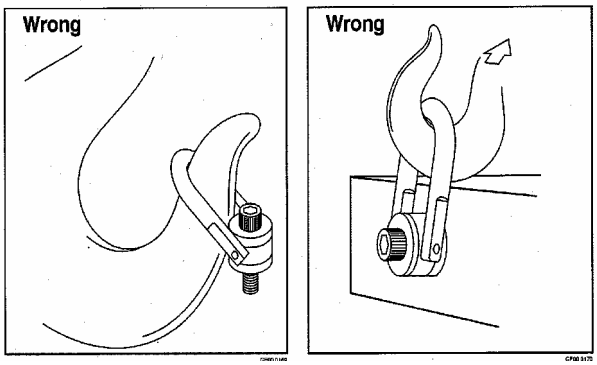

Attach lifting device ensuring free fit to swivel hoist ring bail and ensuring no interference between load (work piece) and bail.

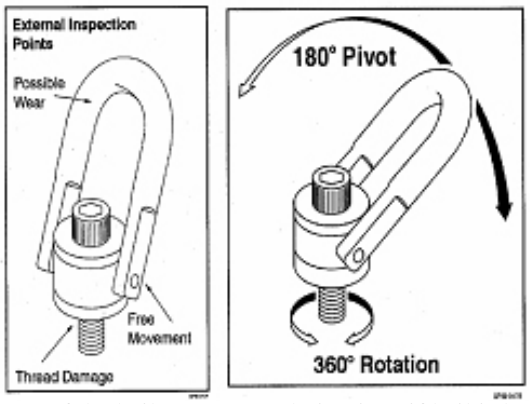

Always ensure free movement of the bail. Never use hoist rings if bail is bent or elongated.

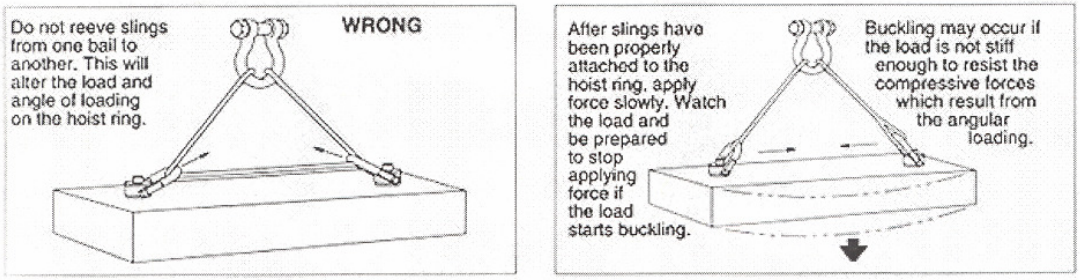

Figure 12-11. Guidelines for Attaching and Using Swivel Hoist Rings

12.9 LOAD INDICATING DEVICES

12.9.1 GENERAL

a. Load-indicating devices are not required in routine operations where loads of known and essentially consistent weight are to be handled. Rather, load-indicating devices are required for use with loads of uncertain weight that could be within 90 - 100 percent of the rated capacity of the equipment or maximum working load of any part of the tackle. Use load-indicating devices where the equipment/tackle configuration could result in binding or friction of the load that could cause a greater stress in the hoist or tackle than would result from the apparent hook load.

b. The accuracy of load-indicating devices shall depend on the requirements of the load system planned, and shall not restrict the system requirements; an accuracy of 2 percent of full-scale reading within 10 - 70 percent of instrument range is recommended. The device should be selected so that the estimated hook load lies between 10 and 70 percent of the instrument range.

c. Load-indicating devices shall have a design factor of not less than 3:1.

d. Dynamometers and load cells shall be calibrated at least once a year and when specified in the critical lift procedure. This also applies if they have not been used in the previous 6 months. All calibrated devices shall have a tag affixed indicating date of calibration, by whom they were calibrated, and the date that the next calibration is due.

12.9.2 CRITICAL LIFTS

a. See Chapter 2, “Critical Lifts,” for critical lift requirements.

b. Load indicating devices used for critical-lift service shall have an initial proof load test per the manufacturer’s specifications confirming the load rating. If proof testing cannot be verified, the load indicating device shall be proof tested before being used to make a critical lift.

12.10 PRECISION LOAD POSITIONERS

12.10.1 GENERAL

a. A precision load positioning device in the load path shall have a design factor of no less than 5:1, based on ultimate strength of the device's load bearing components.

b. A precision load positioner shall be operated, maintained, calibrated and tested in accordance with the manufacturer's instructions.

c. Prior to initial use, all new, repaired, and altered precision load positioning devices shall be load tested, and a written report shall be furnished, confirming the load rating. If the load test is not performed by the manufacturer, it shall be done under the direction of a designated or authorized person in strict compliance with the manufacturer's instructions. Special attention should be paid to the manufacturer's instructions concerning testing of devices equipped with load gages as they may be damaged during the load test.

12.10.2 CRITICAL LIFTS

a. See Chapter 2, "Critical Lifts," for critical lift requirements.

b. Precision load positioners used for critical-lift service shall have an initial proof load test per the manufacturer's specifications confirming the load rating. If proof testing cannot be verified, the precision load positioners shall be proof tested before being used to make a critical lift.

12.11 COMPRESSION HARDWARE

12.11.1 GENERAL

a. This section specifies requirements for U-bolt and double saddle wire rope clips (see Fig. 12-12) and wedge sockets (see Fig. 12-13). Other compression hardware shall be used only in accordance with recommendations of the manufacturer or a qualified person.

b. Wire rope clip materials shall be of sufficient strength such that failure of the wire rope will occur before failure of the wire rope clip at the temperatures that the manufacturer has specified for use. Saddles shall be forged steel.

c. Wedge socket materials shall be of sufficient strength such that failure of the wire rope will occur before failure of the wedge socket at the temperatures, specified for use by the manufacturer.

d. The rated load for wire rope assemblies using compression hardware is based on the wire rope minimum breaking force, 80% minimum connection efficiency and the design factor of the wire rope application. The rated load shall not be exceeded

e. Compression hardware is not required to be proof tested unless specified by the purchaser. If a proof test is specified, the load shall be applied to the wedge socket or the connection made by the wire rope clips after the assembly is complete. The proof load shall be at least 40%, but not exceed 50% of the minimum breaking force unless approved by the compression hardware manufacturer or a qualified person. After proof testing, wire rope clips on a finished assembly shall be re-tightened to the torque recommended by the wire rope clip manufacturer or a qualified person. The compression hardware shall then be inspected in accordance with Section 12.11.6.

f. Wire rope clips shall have the manufacturer's name or trademark and the saddle size either forged or die-stamped into the saddle.

g. Wedge sockets shall have the manufacturer's name or trademark, the size and model (if required to match the wedge to the body) either forged, cast or die stamped into the wedge and socket body.

h. Compression hardware should not be in contact with the load or any obstruction during the lift.

i. Rigging using compression hardware should not be dragged on an abrasive surface or in contact with sharp edges.

j. Wedge sockets should not be side loaded.

k. Impacts can dislodge the wedge from the body and should be avoided.

12.11.2 ASSEMBLY – WIRE ROPE CLIPS

a. Before installing a wire rope clip on plastic coated or plastic impregnated wire rope, consult the wire rope clip manufacturer, wire rope manufacturer, or a qualified person.

b. For U-bolt clips used to create end terminations, the saddle shall be placed on the live end of the wire rope, with the U-bolt on the dead end side (see Fig. 12-12).

c. The minimum number of clips, spacing, turn-back and torque values shall be as recommended by the manufacturer or a qualified person.

d. After assembly, the connection shall be loaded to at least the expected working load. After unloading, wire rope clips shall then be re-tightened to the torque recommended by the manufacturer or a qualified person.

12.11.3 ASSEMBLY – WEDGE SOCKETS

a. The wedge socket shall be assembled as recommended by the manufacturer or a qualified person.

b. Before installing a wedge socket on plastic coated or plastic impregnated wire rope, consult the wedge socket manufacturer, wire rope manufacturer, or a qualified person.

c. The live end of the wire rope in the wedge socket cavity shall be in alignment with the socket's pin (see Fig. 12-13).

d. The assembler shall match the proper wedge with the socket for the wire rope to be installed.

NOTE: Wedges shall not be interchanged between different manufacturers' sockets or models.

e. The length of the dead end tail of the wire rope shall be as required by the manufacturer or a qualified person.

f. The dead end tail of the wire rope extending beyond the wedge socket shall be secured in a manner recommended by the wedge socket

manufacturer or a qualified person (see Fig. 12-13).

g. The dead end of the wire rope shall not be secured to the live end of the wire rope such that it restricts the movement of the live end (see Fig. 12-13).

h. After assembly, the connection shall be loaded to fully seat the wedge before use.

12.11.4 EFFECTS OF ENVIRONMENT

a. Compression hardware are to be used at temperatures above 400°F (204°C) or below-40°F (-40°C), the compression hardware manufacturer or a qualified person should be consulted.

b. The strength of compression hardware can be affected by chemically active environments such as caustic or acid substances or fumes. The compression hardware manufacturer or a qualified person should be consulted before compression hardware are used in chemically active environments.

12.11.5 TRAINING

Compression hardware users shall be trained in the selection, inspection, cautions to personnel, effects of environment, and rigging practices as covered by this standard.

12.11.6 INSPECTIONS

a. Initial Inspection

1. Prior to use, all new, altered, modified, or repaired compression hardware shall be inspected by a designated person to verify compliance with the applicable provisions of this chapter. Written records are not required.

b. Frequent Inspection

1. A visual inspection shall be performed by the user or other designated person each shift before the compression hardware is used. Semi-permanent and inaccessible locations where frequent inspections are not feasible shall have periodic inspections performed.

2. Conditions such as those listed in Section 12.11.7 or any other condition that may result in a hazard shall cause the compression hardware to be removed from service. Compression hardware shall not be returned to service until approved by a qualified person.

3. Written records are not required.

c. Periodic Inspection:

1. A complete inspection of the compression hardware shall be performed by a designated person. The compression hardware shall be examined for conditions such as those listed in Section 12.11.7 and a determination made as to whether they constitute a hazard.

2. Periodic inspection intervals shall not exceed one year. The frequency of periodic inspections should be based on:

i. Frequency of use.

ii. Severity of service conditions.

iii. Nature of lifts being made.

iv. Experience gained on the service life of compression hardware used in similar circumstances.

3. Guidelines for the time intervals are:

i. Normal service – yearly.

ii. Severe service – monthly to quarterly.

iii. Special service – as recommended by a qualified person.

4. Written records are not required.

12.11.7 REMOVAL CRITERIA

Compression hardware shall be removed from service if damage such as the following is visible, and shall only be returned to service when approved by a qualified person:

a. Missing or illegible manufacturer's name or trademark and/or rated load identification.

b. Indications of heat damage including welding spatter or arc strikes.

c. Excessive pitting or corrosion.

d. Bent, twisted, distorted, stretched, elongated, cracked, or broken components.

e. Excessive nicks or gouges.

f. A 10% reduction of the original or catalog dimension at any point.

g. Evidence of unauthorized welding or modification

h. Unauthorized replacement components

i. Insufficient number of wire rope clips

j. Improperly tightened wire rope clips

k. Indications of wire rope slippage

l. Improper assembly or other conditions, including visible damage, that cause doubt as to continue use.

12.11.8 REPAIRS

a. Repairs, alterations, or modifications shall be as specified by the compression hardware manufacturer or a qualified person.

b. Replacement parts shall meet or exceed the original equipment manufacturer's specifications.

12.11.9 CRITICAL LIFTS

a. See Chapter 2, "Critical Lifts," for critical lift requirements.

b. Compression hardware used for critical-lift service shall be proof tested as part of the completed assembly.

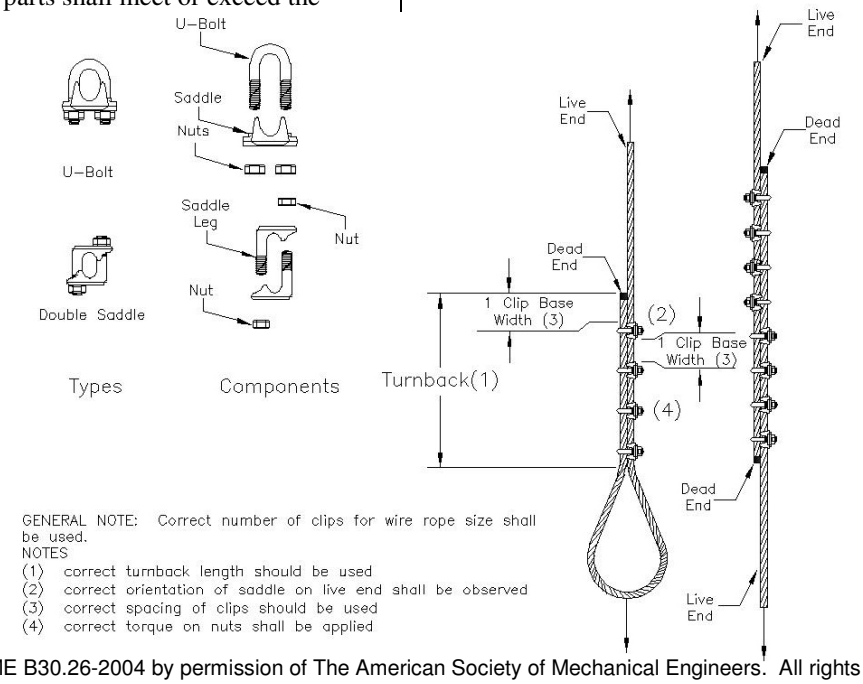

Reprinted from ASME B30.26-2004 by permission of The American Society of Mechanical Engineers. All rights reserved.

Figure 12-12. Wire Rope Clips

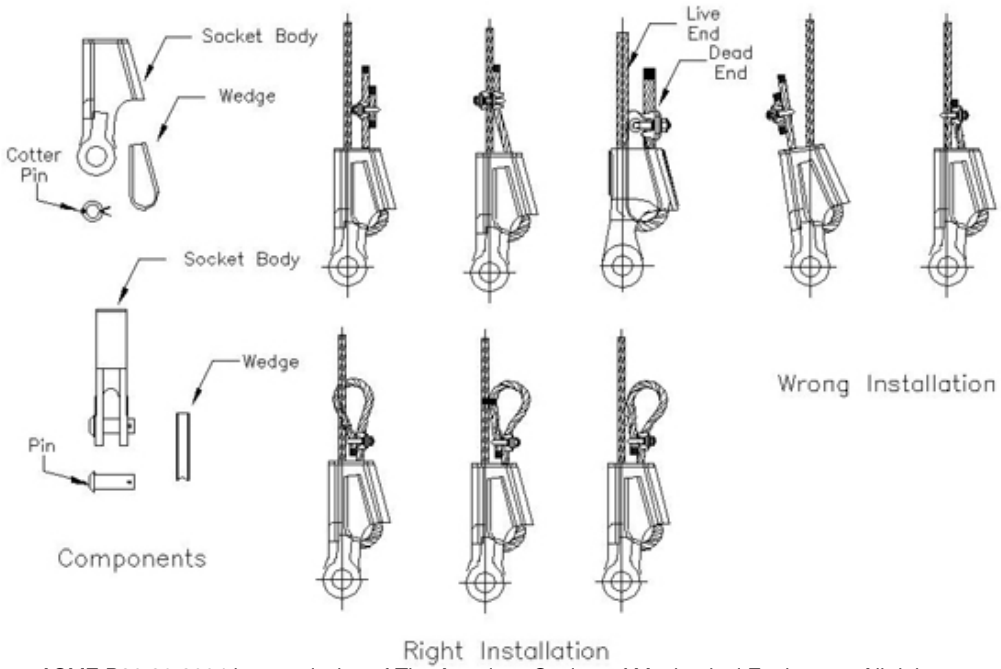

Reprinted from ASME B30.26-2004 by permission of The American Society of Mechanical Engineers. All rights reserved.

Figure 12-13. Wedge Sockets

CHAPTER 13 LOAD HOOKS

This chapter provides safety standards for the inspection, testing, and maintenance of load hooks installed on cranes or hoists and implements the requirements of ASME B30.10, Chapter 10-1, "Hooks." See Chapter 12, "Rigging Accessories," for rigging hook requirements (for latest ASME standards, see http://catalog.asme.org/home.cfm?Category=CS).

13.1 GENERAL 13-1
- 13.1.1 Marking 13-1
- 13.1.2 Attachments 13-1
- 13.1.3 Load Limits 13-1
- 13.1.4 Hook Standards 13-1

13.2 INSPECTIONS 13-2
- 13.2.1 Hook Service 13-2
- 13.2.2 Initial Inspection 13-2
- 13.2.3 Daily Inspection 13-2
- 13.2.4 Frequent Inspection 13-2
- 13.2.5 Periodic inspection 13-2

13.3 TESTING 13-4

13.4 NONDESTRUCTIVE TESTING (NDT) 13-6
- 13.4.1 NDT Requirements 13-6
- 13.4.2 NDT Records 13-6
- 13.4.3 NDT Methods 13-6
- 13.4.4 Acceptance Criteria 13-6
- 13.4.5 Discontinuity Removal 13-6

13.5 MAINTENANCE 13-8

13.6 OPERATION 13-9

Exhibit I Hook Periodic Inspection Report 13-13

INTENTIONALLY BLANK

13.1 GENERAL

13.1.1 MARKING

a. The manufacturer's identification shall be forged, cast, or die-stamped on a low-stress and nonwearing area of the hook.

b. Hoisting hooks furnished by the original hoisting equipment manufacturer as an integral part the hoist assembly or by the original hoist manufacturer as replacement hooks are not required to have manufacturer markings.

13.1.2 ATTACHMENTS

a. Hoisting hooks shall be fitted with a latch to bridge the throat opening to prevent the accidental release of slings or attachments. Hooks without latches may be used in special applications where the latch would interfere with the proper use of the hook, providing that (1) the use of the hook is restricted to the application for which it is approved, and (2) in questionable cases, concurrence is obtained from the appropriate safety organization.

b. If a handle or latch support is required to be welded to the hook, welding shall be done prior to final heat-treating.

13.1.3 LOAD LIMITS

Hooks shall not be loaded beyond rated capacity except during load tests of the equipment of which they are a part.

13.1.4 HOOK STANDARDS

a. Hook design shall meet generally accepted hook design standards and be compatible with the requirements of ASME B30.10.

b. Hook material shall have sufficient ductility to permanently deform before failure at the ambient temperatures at which the hook will be used.

c. When a latch is provided, it shall be designed to retain such items as slings under slack conditions. The latch is not intended to support the load.

d. The bearing surfaces of new hooks shall be the arc of a circle. Gauge points, or hook gauges, for measuring spread after load testing should be provided.

e. Field-fabricated hooks shall meet the requirements of this section and shall be approved by a qualified engineer.

13.2 INSPECTIONS

13.2.1 HOOK SERVICE

Hook service is defined as follows:

a. Normal service – operation at less than 85 percent of rated capacity except for isolated instances.

b. Heavy service – operation at 85 to 100 percent of rated capacity as a regular specified procedure.

c. Severe service – operation at heavy service coupled with abnormal operating conditions, (i.e., extreme temperatures, corrosive atmospheres, etc.).

13.2.2 INITIAL INSPECTION

a. Prior to initial use, all new and repaired hooks shall be inspected by a qualified inspector to ensure their compliance with the applicable provisions of ASME B30.10, Section 10-1.2. Dated and signed inspection records shall be kept on file and shall be readily available.

b. Inspection procedure and record keeping requirements for hooks in regular service shall be governed by requirements for the kind of equipment in which they are used. When such requirements are stated in standards for the specific equipment, they shall take precedence over the requirements of this section.

13.2.3 DAILY INSPECTION

a. Operators or other designated personnel shall visually inspect hooks for deficiencies such as the following each day or prior to use if the hook has not been in regular service (records are not required):

   1. Cracks, nicks, and gouges.

   2. Deformation.

   3. Damage from chemicals.

   4. Latch engagement, damage to or malfunction of latch (if provided).

   5. Evidence of heat damage.

b. A designated person shall examine deficiencies and determine whether they constitute a safety hazard and whether a more detailed inspection is required.

13.2.4 FREQUENT INSPECTION

a. Operators or other designated personnel shall visually inspect the hook at the following intervals (records are not required):

   1. Normal service – monthly. .

   2. Heavy service – weekly to monthly.

   3. Severe service

b. These inspections shall, in addition to the requirements of Section 13.2.3, “Daily Inspection,” include the following:

   1. Wear.

   2. Hook attachment and securing means.

c. A designated person shall examine deficiencies and determine whether they constitute a safety hazard and whether a more detailed inspection is required.

13.2.5 PERIODIC INSPECTION

a. A qualified inspector shall perform a complete inspection at the following intervals:

   1. Normal service – yearly.

   2. Heavy service – semiannually.

   3. Severe service – quarterly.

b. A qualified person shall examine deficiencies and determine whether they constitute a safety hazard.

c. The inspection shall include the requirements of Section 13.2.4, "Frequent Inspection."

d. Hooks having any of the following conditions shall be removed from service until repaired or replaced:

1. *Deformation* – Any visibly apparent bend or twist from the plane of the unbent hook.

2. *Throat opening* – Any distortion causing an increase in throat opening exceeding 5 percent, not to exceed ¼ inch (or as recommended by the manufacturer).

3. *Wear* – Any wear exceeding 10 percent (or as recommended by the manufacturer) of the original section dimension of the hook or its load pin.

4. Cracks.

5. If a latch is provided and it becomes inoperative because of wear or deformation or fails to fully bridge the throat opening, the hook shall be removed from service until the device has been repaired or replaced and the throat opening has been assessed as described above.

6. Any self-locking hook that does not lock.

e. If hooks are painted, a visual inspection should take the coating into consideration. Surface variations can disclose evidence of heavy or severe service. The surface condition may call for stripping the paint in such instances.

f. Hooks in severe service as defined in 13.2.1.c. may show the need for a nondestructive testing.

f. Dated and signed inspection records shall be kept on file and shall be readily available.

13.3 TESTING

a. Each new or replacement hook of 150-ton capacity or greater and a prototype of each hook design of less than 150-ton capacity shall be proof-tested by the manufacturer in accordance with Table 13-1.

b. When proof tests are used, the hooks shall withstand the proof load application without permanent deformation when the load is applied for a minimum of 15 seconds. This condition is considered satisfied if the permanent increase in the throat opening does not exceed 0.5 percent or 0.01 in. (0.25 mm), whichever is greater.

c. For a duplex (sister) hook having a pin eye, the proof load for the eye shall be in accordance with Table 13-1. The proof load shall be shared equally between the two prongs of a sister hook, unless the hook is designed for unbalanced loading.

d. Hooks that have been proof-tested may be subsequently inspected by the magnetic-particle method in accordance with ASTM E-709 ("Standard Practice for Magnetic Particle Examination") and shall show no cracks, inclusions, or other relevant discrepancies; casting shall be evaluated in accordance with ASTM E-165 ("Standard Practice for Liquid Penetrant Inspection Method").

e. Performance testing of hooks shall not be required except where necessary to conform to the requirements for the equipment of which they are part. When testing is specified, documentation shall be uniquely identified to the hook by serial number or other identifier.

Table 13-1. Proof test load.

Rated load, tons (2,000 lb)	kg	% rated load	Proof load (minimum), tons (2,000 lb)	kg
0.50	453.6	200	1	907.2
1	907.2	200	2	1,814.4
5	4,536	200	10	9,072
10	9,072	200	20	18,144
15	13,608	200	30	27,216
20	18,144	200	40	36,288
25	22,680	200	50	45,360
30	27,216	200	60	54,432
35	31,752	200	70	63,504
40	36,288	200	80	72,576
45	40,824	200	90	81,648
50	45,360	200	100	90,720
60	54,432	193	116	105,235
75	68,040	183	137	124,286
100	90,720	166	166	150,595
125	113,400	150	188	170,554
150	136,080	133	200	181,440
175	158,760	133	233	211,378
200	181,440	133	266	241,315
250	226,800	133	333	302,098
300	272,160	133	399	361,973
350	317,520	133	465	421,848
400	362,880	133	532	482,630
450	408,240	133	598	542,506
500	453,600	133	665	603,288
Above 500	453,600	133		

Note: 1 ton (short, 2,000 lb) = 907.2 kg

For hooks with load ratings not shown above, use the next lower load rating for determining the percent f rated load to be applied.

Reprinted from ASME B30.10-2005 by permission of The American Society of Mechanical Engineers. All rights reserved.

13.4 NONDESTRUCTIVE TESTING (NDT)

13.4.1 NDT REQUIREMENTS

If detailed inspections are performed (refer to sections 13.2.3.b., 13.2.4.c, and 13.2.5.b.), the results shall be evaluated by a qualified person to determine the need for subsequent NDT. If NDT is deemed necessary, it shall be performed in accordance with Section 13.4.3.

13.4.2 NDT RECORDS

Dated and signed NDT records, traceable to the hook by a serial number or other identifier, shall be kept on file as long as the hook remains in service and shall be readily available to appointed personnel.

13.4.3 NDT METHODS

a. Use magnetic-particle testing or liquid-penetrant testing methods to inspect for surface intersecting discontinuities.

b. A qualified inspector or designated person shall perform NDTs in accordance with the following ASTM standards:

   1. ASTM E-709.

   2. ASTM E-165.

c. For magnetic-particle testing, a coil, yoke, or wet technique should be used to eliminate the possibility of prod burns or arc strikes.

d. Perform an NDT with the hook in place unless conditions indicate that disassembly for thread or shank inspection is necessary.

13.4.4 ACCEPTANCE CRITERIA

A designated person shall document and resolve the following relevant indications:

a. Arc strikes (welding or electrical).

b. Surface intersecting discontinuities 0.25 in. long or longer.

13.4.5 DISCONTINUITY REMOVAL

a. Two directions of discontinuity, “P” and “T,” are shown on Figures 13-1 and 13-2. Discontinuity “P” parallels the contour of the hook, is considered nonserious, and does not require removal. Discontinuity “T,” on the other hand, is transverse to the contour of the hook and is more serious; when occurring in zones B, C, or D, discontinuity “T” may reduce the longevity of the hook.

b. Discontinuities may be removed by grinding longitudinally following the contour of the hook to produce a smooth, gently undulating surface. In zones B and D, such grinding shall not reduce the original hook dimension by more than 10 percent. Such a reduction will not affect the working load limit rating or the ultimate load rating of the hook. In zone C, grinding shall not reduce the original dimension by more than 5 percent.

c. Under normal and proper application, zone A is an unstressed zone. Therefore, it is not required that discontinuities in that zone be ground out.

d. The hook shall be reexamined by performing an NDT after grinding to verify removal of relevant discontinuities.

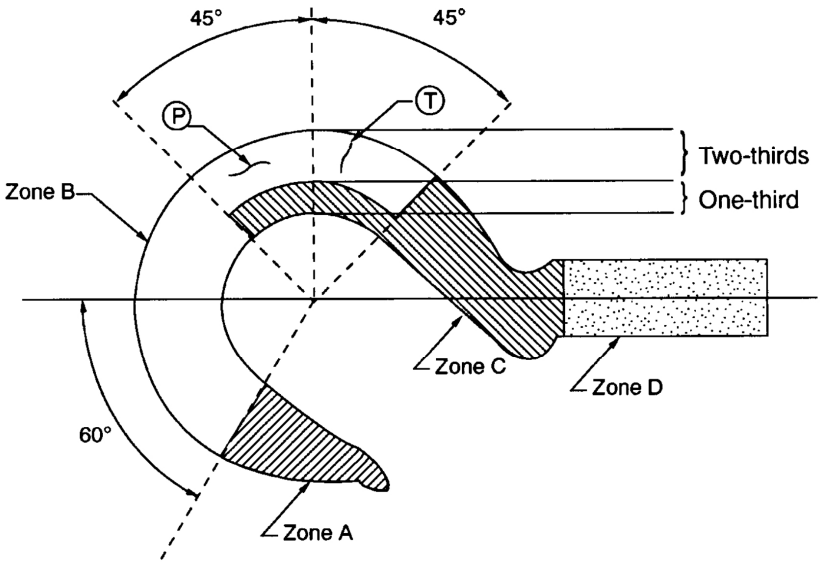

Figure 13-1. Shank hook.

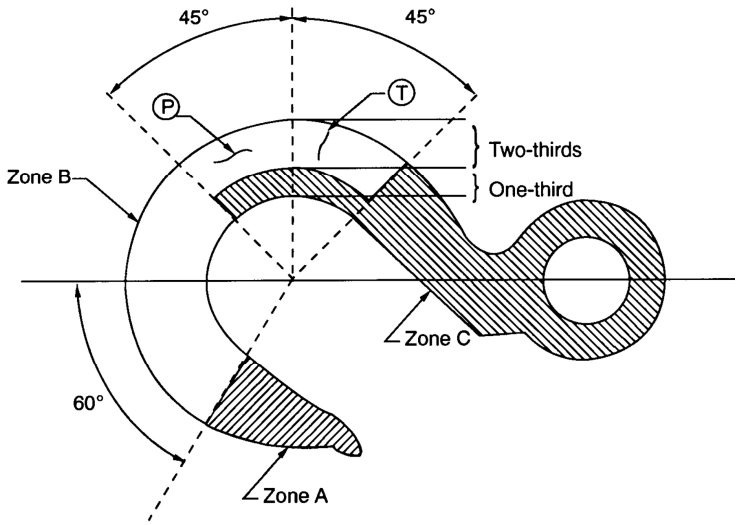

Figure 13-2. Eye hook.

13.5 MAINTENANCE

a. A hook latch that is inoperative or missing shall be repaired or replaced.

b. A hook with a latch that does not bridge the throat opening shall be removed from service until the latch is replaced or repaired and the hook is examined for deformation with special attention to the throat opening.

c. A designated person shall repair cracks, nicks, and gouges by grinding longitudinally, following the contour of the hook, provided no dimension is reduced more than 10 percent (or as recommended by the manufacturer) of its original value.

d. All other repairs shall be performed by the manufacturer or a qualified person.

e. Replacement parts, such as load pins for clevis hooks, shall be at least equal to the original manufacturer's specifications.

13.6 OPERATION

Hook users shall do the following:

a. Determine that the weight of the load to be lifted does not exceed the load rating f the hook.

b. Avoid shock loading.

c. Center the load in the base (bowl or saddle) of the hook to prevent point loading of the hook.

d. Do not use hooks in such a manner as to place a side- or backload on the hook.

e. When using a device to bridge the throat opening of the hook, ensure that no portion of the load is carried by the bridging device.

f. Keep hands and fingers from between the hook and the load.

g. Load duplex (sister) hooks equally on both sides, unless the hook is specifically designed for single loading.

h. Do not load the pinhole in duplex (sister) hooks beyond the rated load of the hook.

INTENTIONALLY BLANK

Exhibit I is intended to be a sample form only.
The equipment manufacturer's inspection/testing
criteria supercede any other criteria.
In cases where the equipment manufacturer does not include
inspection/testing criteria, other forms developed to facilitate
required inspection/testing are acceptable.

INTENTIONALLY BLANK

EXHIBIT I
(SAMPLE FORM)

DEVICE:_____ DEVICE NO.:_____

SERVICE CLASSIFICATION:_____ LOCATION:_____

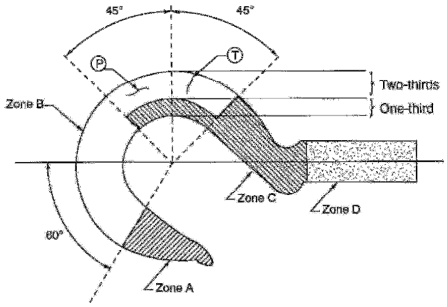

Two directions of discontinuities are labeled on the drawing above as "P" and "T." discontinuity P parallels the contour of the hook and is considered non-serious in nature and does not require removal from service. Discontinuity T is transverse to contour of the hook and is more serious in nature. Discontinuity T, when occurring in Zones B, C, or D, may reduce longevity of the hook. If the inspection identifies discontinuities, NDT should be considered.

	Original Measurements				
Date					
Throat Opening					
Tram AA					
Tram BB					
Twist Angle					
Crack					
Wear					
Hook Latch					
NDT Performed					
Pass/Fail					
Inspector					

COMMENTS:

NOTES ON RESULTS:

INTENTIONALLY BLANK

CHAPTER 14
BELOW-THE-HOOK LIFTING DEVICES

This chapter provides the requirements for below-the-hook lifting devices used in hoisting and rigging, such as spreader bars, lifting yokes, and lift fixtures. This section implements the requirements of ASME B30.20, "Below-the-Hook Lifting Devices" (for latest ASME standards, see http://catalog.asme.org/home.cfm?Category=CS).

NOTE: Special lifting devices for shipping containers weighing 10,000 lb or more that are used for radioactive materials are governed by ANSI N14.6 ["Standard for Special Lifting Devices for Shipping Containers Weighing 10,000 Pounds (4,500 kg) or More for Nuclear Materials."]

14.1 GENERAL 14-1

14.2 STRUCTURAL AND MECHANICAL LIFTING DEVICES 14-2
- 14.2.1 Design/Fabrication 14-2
- 14.2.2 Marking 14-2
- 14.2.3 Modification/Rerating 14-3
- 14.2.4 Guarding 14-3
- 14.2.5 Inspections 14-3
  - 14.2.5.1 Initial Inspection 14-3
  - 14.2.5.2 Frequent Inspection 14-3
  - 14.2.5.3 Periodic Inspection 14-3
- 14.2.6 Testing 14-4
  - 14.2.6.1 Operational Test 14-4
  - 14.2.6.2 Rated Load Test 14-4
- 14.2.7 Maintenance 14-4
- 14.2.8 Training/Qualification 14-4
- 14.2.9 Operation 14-8
- 14.2.10 Critical Lifts 14-8

14.3 VACUUM LIFTING DEVICES 14-9
- 14.3.1 Design/Fabrication 14-9
- 14.3.2 Marking 14-9
- 14.3.3 Installation 14-11
- 14.3.4 Inspections 14-11
  - 14.3.4.1 Initial Inspection 14-11
  - 14.3.4.2 Frequent Inspection 14-11
  - 14.3.4.3 Periodic Inspection 14-11
- 14.3.5 Testing 14-12
  - 14.3.5.1 Operational Test 14-12
  - 14.3.5.2 Rated Load Test 14-12
- 14.3.6 Maintenance 14-12
- 14.3.7 Training/Qualification 14-12
- 14.3.8 Operation 14-13
- 14.3.9 Critical Lifts 14-14

14.4 MAGNETS, CLOSE-PROXIMITY-OPERATED 14-15
- 14.4.1 Design/Fabrication 14-15
- 14.4.2 Marking 14-15
  - 14.4.2.1 Rated Load (Capacity) 14-17
  - 14.4.2.2 Controls 14-17
- 14.4.3 Installation 14-17

14.4.4 Inspections 14-17
14.4.4.1 Initial Inspection 14-17
14.4.4.2 Frequent Inspection 14-17
14.4.4.3 Periodic Inspection 14-17
14.4.5 Testing 14-18
14.4.5.1 Operational Test 14-18
14.4.5.2 Rated Load Test 14-18
14.4.6 Maintenance 14-18
14.4.7 Training/Qualification 14-19
14.4.8 Operation 14-19
14.4.8.1 External-Powered Electromagnets 14-20
14.4.8.2 Battery-Operated Electromagnets 14-20
14.4.8.3 Electrically Controlled Permanent Magnets 14-20
14.4.8.4 Manually Controlled Permanent Magnets 14-20
14.4.9 Critical Lifts 14-20

14.5 MAGNETS, REMOTE OPERATED 14-21
14.5.1 Design/Fabrication 14-21
14.5.2 Marking 14-21
14.5.3 Installation 14-21
14.5.4 Inspections 14-21
14.5.4.1 Initial Inspection 14-21
14.5.4.2 Frequent Inspection 14-21
14.5.4.3 Periodic Inspection 14-21
14.5.5 Testing 14-23
14.5.5.1 Operational Test 14-23
14.5.6 Maintenance 14-23
14.5.7 Training/Qualification 14-23
14.5.8 Operation 14-24
14.5.9 Critical Lifts 14-24

Exhibit I Lifting Bars and Spreaders Load Test and Inspection 14-27

14.1 GENERAL

a. Below-the-hook lifting devices are arranged in the following groups because of the diversity of types:

   1. Structural and mechanical lifting devices.

   2. Vacuum lifting devices.

   3. Close-proximity-operated magnets.

   4. Remote-operated magnets.

b. Slings and rigging accessories that may be components in a below-the hook lifting device are covered in Chapters 11 and 12 ("Wire Rope and Slings," and "Rigging Accessories," respectively) of this standard..

c. The working load limit (WLL) of below-the- hook lifting devices shall not be exceeded in their as configured application.

d. Individual site programs shall describe how periodic inspections for below-the-hook lifting devices are recorded. These records may include an external coded mark or tag on the device (e.g. date, annually changed color stripe, etc.) indicating both periodicity and the satisfactory completion of the required periodic inspection, or a written record as acceptable documentation. (Refer to Sections 14.2.5.3.d, 14.3.4.3.d, 14.4.4.3.e, and 14.5.4.3.d.)

14.2 STRUCTURAL AND MECHANICAL LIFTING DEVICES

a. Structural and mechanical lifting devices are often one-of-a-kind designs. Typical devices include:

   1. Load-supporting lifting devices (Figure 14-1).

   2. Friction-type pressure gripping lifting devices (Figure 14-2).

   3. Indentation-type gripping lifting devices (Figure 14-3).

   4. Cask lift fixtures (Figure 14-4).

14.2.1 DESIGN/FABRICATION

Structural and mechanical lifting devices shall be designed, fabricated , labeled and assigned a design category according to the provisions of ASME B30.20 and ASME BTH-1.

14.2.2 MARKING

a. The rated capacity of each lifting device shall be marked on the main structure where it is visible and legible. If the lifting device comprises several items, each detachable from the assembly, each lifting device shall be marked with its rated capacity. At a minimum, a nameplate, name tag, or other permanent marker shall be affixed displaying the following data.

   1. Manufacturer's name (contractor's name if fabricated onsite).

   2. Lifting device weight (if over 100 lb).

   3. Serial number (if applicable).

   4. Rated capacity.

b. All new structural and mechanical lifting devices shall be marked with, but not limited to, the following information:

   1. Manufacturer's name and address

   2. Serial number

   3. Lifter weight, if over 100 lb (45 kg)
   4. Cold current (amps) (when applicable)

   5. Rated voltage (when applicable)

   6. Rated load (as described in section 14.2.2.a)

   7. ASME BTH-1 Design Category

   8. ASME BTH-1 Service Class

c. All repaired or modified structural and mechanical lifters shall be provided with identification displaying, but not limited to, the following information:

   1. name and address of the repairer or modifier

   2. repairer's or modifier's unit identification

   3. lifter weight (if altered)

   4. cold current (amps) (if altered)

   5. rated voltage (if altered)

   6. rated load (if altered) [as described in section 14.2.2.a

   7. ASME BTH-1 Design Category (if altered)

   8. ASME BTH-1 Service Class (if altered)

d. A rerated lifting device shall be relabeled with the new rated capacity.

e. Cases may exist where a lifting device cannot be marked with its rated capacity and weight. This may be due to the security classification of the load to be lifted or other reasons approved by the responsible manager. In these cases, the lifting device shall be marked with an identification number, and its documentation shall describe both its rated capacity and weight.

14.2.3 MODIFICATION/RERATING

a. Structural and mechanical lifting devices may be modified or rerated if the changes are analyzed by a qualified engineer or the manufacturer of the lifting device.

b. Rerated or modified lift fixtures shall be load-tested as described in Section 14.2.6.2, "Rated Load Test," below.

14.2.4 GUARDING

Exposed moving parts or pinch points, such as gearing, chain drives, and rotating shafts, that may be a hazard to personnel during lifting operations shall be guarded.

14.2.5 INSPECTIONS

14.2.5.1 Initial Inspection

Prior to their initial use, a qualified inspector shall inspect all new, modified, or repaired lifting devices to ensure compliance with Section 14.2.5.3, "Periodic Inspection."

14.2.5.2 Frequent Inspection

a. The operator or other designated person shall visually inspect each lifting device at the beginning of each shift or prior to use, if it has not been in regular service, for the following items or conditions (records are not required):

   1. Structural deformation, cracks, or excessive wear on any part.

   2. Loose or missing guards, fasteners, covers, stops, or nameplates.

   3. All operating mechanisms and automatic hold-and-release mechanisms for maladjustments interfering with operation.

b. The operator or designated person shall carefully examine any deficiencies and determine whether they constitute a hazard. Deficiencies noted during the inspection shall be corrected before the lifting device is used.

14.2.5.3 Periodic Inspection

a. A qualified inspector shall perform a complete inspection at the following intervals:

   1. Normal service – yearly. Inspect equipment at site of use.

   2. Heavy service – semiannually. Inspect equipment at site of use unless external conditions indicate that disassembly should be done to permit detailed inspection.

   3. Severe service – quarterly. Inspect equipment at site of use unless external conditions indicate that disassembly should be done to permit detailed inspection.

   4. Special or infrequent service – as recommended by a qualified person before the first such use and as directed by the qualified person for any subsequent uses.

b. Lifting device service is defined as follows:

   1. Normal – operation with various weights within the rated load limit, or uniform loads less than 65 percent of rated load.

   2. Heavy – operation within the rated load limit that exceeds normal service.

   3. Severe – operation at normal or heavy service under abnormal operating conditions.

c. This inspection shall include the items listed in Section 14.2.5.2, "Frequent Inspection," in addition to the following:

   1. Loose bolts or fasteners.

   2. Check for suspect/counterfeit parts (see Terminology and Definitions, Chapter 1).

   3. Cracked or worn gears, pulleys, sheaves, sprockets, bearings, chains, and belts.

   4. Excessive wear of friction pads, linkages, and other mechanical parts.

5. Excessive wear at hoist-attaching points and load-support shackles or pins.

6. External evidence of damage to motors or controls.

d. A qualified inspector shall inspect fixtures not in regular use according to periodic inspection requirements before placing them in service.

e. Dated reports of each periodic inspection shall be prepared. They shall be kept on file and shall be readily available. A sample load test and inspection form is included as Exhibit I at the end of this section. This form is intended to be a sample only and is not intended to be mandatory.

14.2.6 TESTING

14.2.6.1 Operational Test

a. Modified or repaired lifting devices shall be tested before initial use to ensure compliance with the requirements of this section (test reports kept on file). Testing shall include the following:

1. Lifting devices with moving parts shall be tested to confirm that the lifting device operates in accordance with manufacturer's instructions.

2. Lifting devices with manually operated or automatic latches shall be tested to verify that the latches operate in accordance with manufacturer's instructions.

14.2.6.2 Rated Load Test

a. All new, altered, modified, or repaired lifting devices shall be tested and inspected before use. The results of the test and inspection shall be documented in the equipment history file.

b. The rated capacity shall not be more than 80 percent of the maximum load sustained during the test. Test loads shall not be more than 125 percent of the rated capacity unless otherwise recommended by the manufacturer. Test weights shall be accurate to within -5 percent, +0 percent of stipulated values.

c. The rated load test shall consist of the following:

1. Hoist the test load a sufficient distance to ensure that it is supported by the lifting device, or apply the required load if the test is made using a testing machine. Personnel shall remain clear of suspended loads.

2. Visually inspect the lifting device for deformation, cracks, or other defects after the load test is completed.

14.2.7 MAINTENANCE

a. A preventive maintenance program shall be established based upon manufacturer's recommendations. If equipment maintenance procedures deviate from published manufacturer's recommendations, the alternate procedures shall be approved in advance by the manufacturer or another qualified person and be kept readily available.

b. Replacement parts shall be equivalent to the original specifications.

14.2.8 TRAINING/QUALIFICATION

a. Below-the-hook lifting device operators shall be trained and qualified as required in Chapter 6, "Personnel Qualification and Training." At a minimum, instruction should include the following:

1. Application of the lifting device to the load and adjustments to the device, if any, that adapt it to various sizes or kinds of loads.

2. Any special operations or precautions.

3. Condition of the load itself required for operation of the lifting device such as balance, degree of order of stacked loads, surface cleanliness, bending, and load thickness.

4. Procedure for storage of lifting device to protect it from damage.

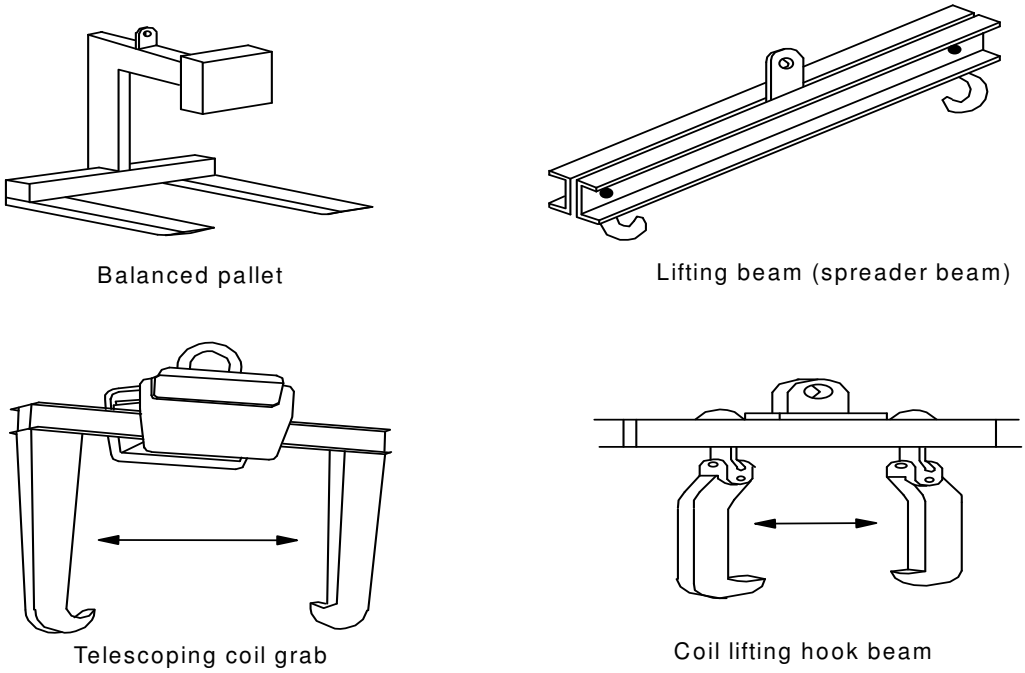

Reprinted from ASME B30.20-2006 by permission of The American Society of Mechanical Engineers. All rights reserved.

Figure 14-1. Load-supporting lifting devices

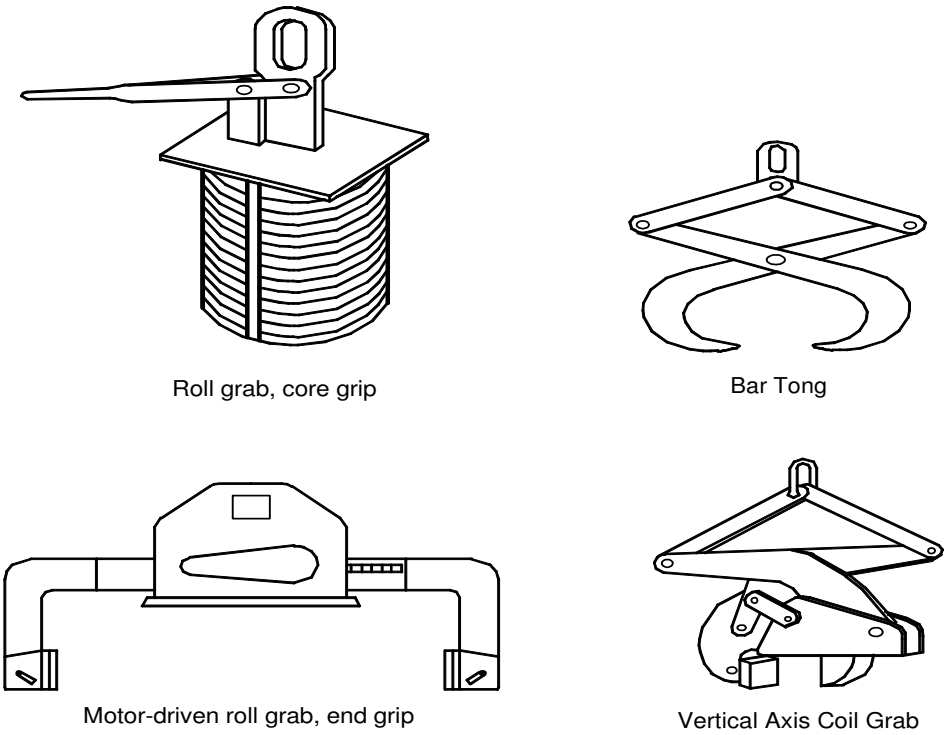

Reprinted from ASME B30.20-2006 by permission of The American Society of Mechanical Engineers. All rights reserved.

Figure 14-2. Friction-type pressure gripping lifting devices.

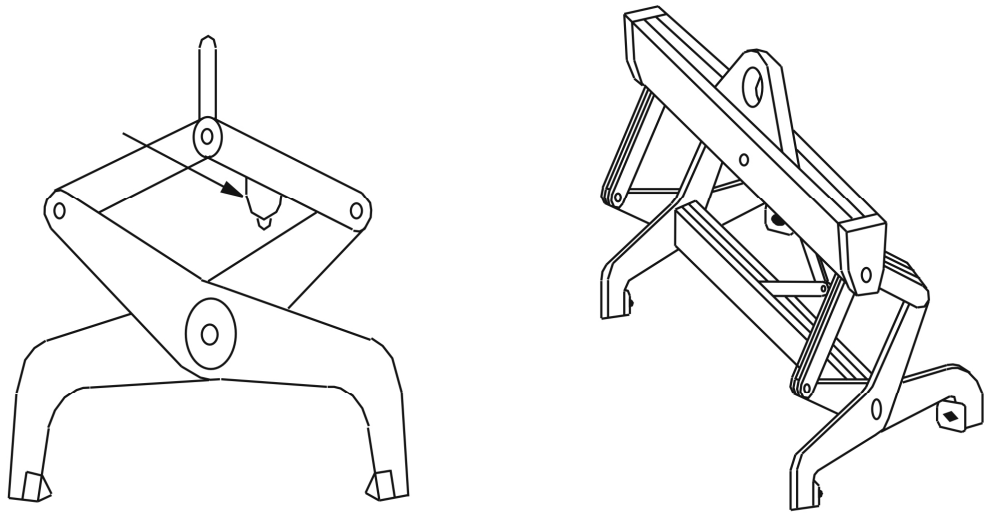

Reprinted from ASME B30.20-2006 by permission of The American Society of Mechanical Engineers. All rights reserved.

Figure 14-3. Indentation-type gripping lifting device

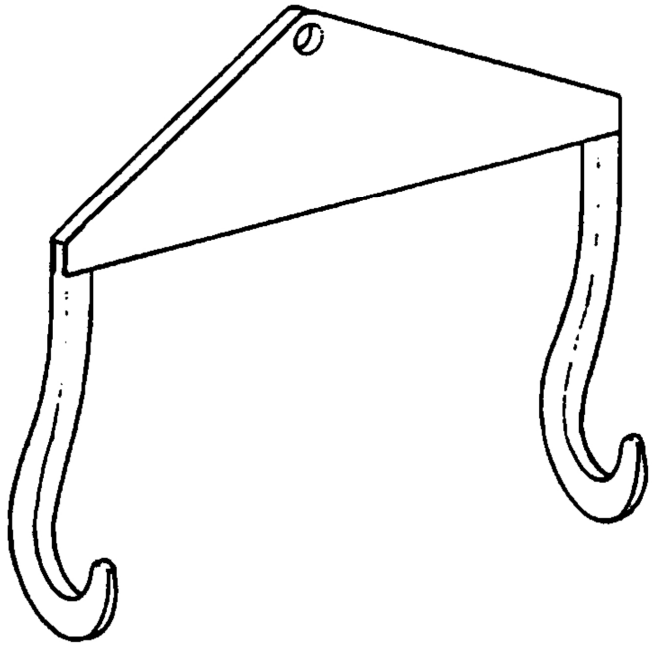

Figure 14-4. Typical cask lift fixture

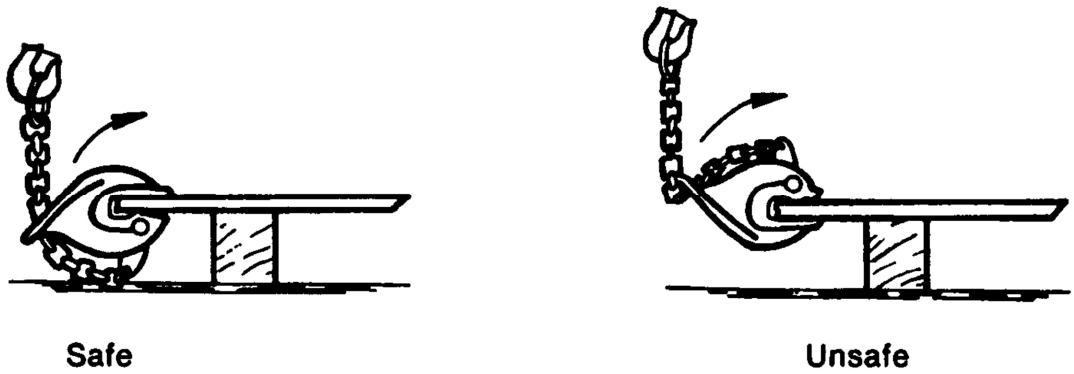

Reprinted from ASME B30.20-2006 by permission of The American Society of Mechanical Engineers. All rights reserved.

Figure 14-5. Metal-plate clamps.

5. Instructions for not exceeding the rated capacity of the lifting device or the capacity of the hoisting equipment by the combined weight of the load, the lifting device, and the rigging.

b. Operators shall demonstrate the ability and competence to operate the lifting device as instructed before assuming responsibility for using it.

14.2.9 OPERATION

a. Only the following personnel shall operate structural and mechanical lifting devices:

1. Qualified operators or riggers.

2. Trainees under the direct supervision of a qualified operator.

3. Maintenance and test personnel, when it is necessary in the performance of their duties.

4. Inspectors of lifting devices.

b. The following shall apply to all personnel who operate structural and mechanical lifting devices:

1. Observe the condition of the lifting device before use and during operation. If you observe a defect that affects the continued safe use of the lifting device, remove it from service.

2. Place any attached load on the floor or ground and, after use, properly store the lifting device before leaving.

3. Before they are used on each shift, test the lifting device controls. If any controls do not operate properly, adjust or repair them before operations begin.

4. Do not load the lifting device in excess of its rated capacity (except for test loads) or handle any load for which it is not designed.

5. Apply the lifting device to the load in accordance with established procedures.

6. Before lifting, ensure that lifting-device ropes or chains are not kinked and multiple-part lines are not interwoven.

7. Ensure that the load is correctly distributed for the lifting device being used.

8. Do not use the lifting device for side pulls or sliding the load unless specifically authorized by a qualified person or by an approved procedure.

9. Do not use a lifting device that is tagged “Danger – Do Not Operate” or otherwise designated as nonfunctional.

10. Do not remove “Danger – Do Not Operate” tags from lifting devices without the approval of the person who placed them or an authorized person.

11. Store the lifting device in a dry, inside location when not in use.

12. Ensure that markings or tags are not removed or defaced. Replace missing or defaced markings or tags.

14.2.10 CRITICAL LIFTS

See Chapter 2, “Critical Lifts,” for critical lift requirements.

a. Structural and mechanical lifting devices for critical-lift service shall have an initial proof-load test of not less than 125 percent of its rated capacity or as specified by the design standard to which it was built. If proof-testing cannot be verified, the lifting device shall be proof-tested before being used to make a critical lift.

14.3 VACUUM LIFTING DEVICES

Typical power-operated and mechanically operated vacuum lifting and manipulating devices are shown in Figures 14-5 and 14-6. This section does not cover devices used to handle porous materials, which requires special design and construction.

14.3.1 DESIGN/FABRICATION

Power- and mechanically-operated vacuum lifting devices shall be designed and fabricated according to the provisions of ASME B30.20, 20-2.2.2.

14.3.2 MARKING

a. The rated capacity, maximum width and length, and minimum thickness of load shall be marked on the main structure where it is visible and legible.

b. Individual pads or groups of pads, controlled by shutoff valves, shall be marked with the rated capacity of each pad or group of pads.

c. At a minimum, a nameplate, name tag, or other permanent marker shall be affixed to each lifter displaying the following data:

   1. Manufacturer's name.

   2. Model number or unit identification.

   3. Weight of lifting-device.

   4. Electric power (when applicable).

   5. Pressure and volume of compressed air (when applicable).

   6. Rated capacity.

d. Manual shutoff valves on individual pads or groups of pads shall be marked to show operating position.

e. Cases may exist where a lifting device cannot be marked with its rated capacity and weight. This may be due to the security classification of the load to be lifted or other reasons approved by the responsible manager. In these cases, the lifting device shall be marked with an identification number, and its documentation shall contain both its rated capacity and weight.

f. A label or labels shall be affixed t each vacuum lifting device in a readable position that displays the word "WARNING" or other legend designed to bring the label to the attention of the operator. The label shall also contain information cautioning against:

   1. Exceeding the rated capacity or lifting loads not specified in the manufacturer's instruction manual.

   2. Operating a damaged or malfunctioning unit or a unit with missing parts.

   3. Operating when vacuum indicators show insufficient vacuum.

   4. Operating the unit when vacuum pads are not spaced for equal loading.

   5. Incorrect positioning of the lifting device on the load.

   6. Lifting people.

   7. Moving loads above people.

   8. Removing/obscuring warning labels.

   9. Operating the lifting device when the rated capacity, lifting-device weight, or safety markings are missing (except in cases where the device cannot, for security or other reasons, be marked).

   10. Making alterations or modifications to the lifting device.

   11. Lifting loads higher than necessary and leaving suspended loads unattended.

g. A label shall be affixed to each unit that directs the user to consult the manufacturer's manual if the size or shape of the unit prohibits the inclusion of the above markings.

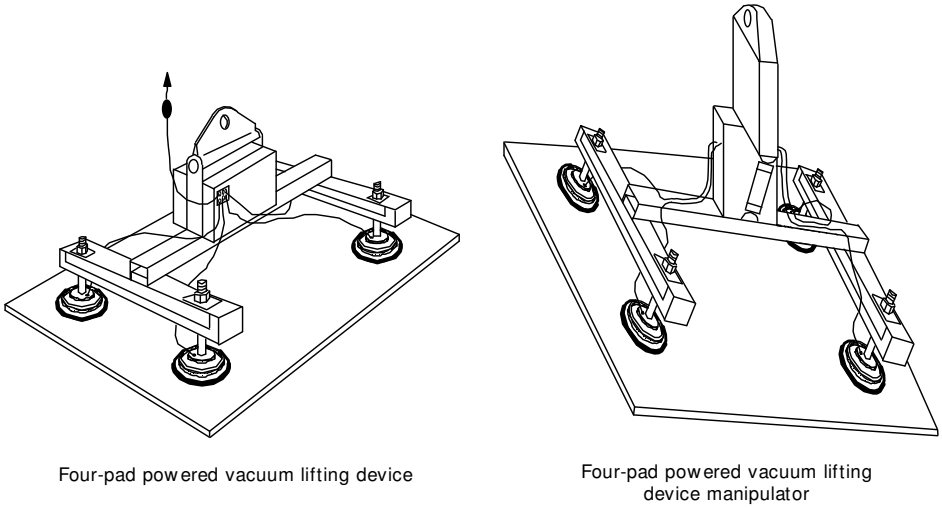

Reprinted from ASME B30.20-2006 by permission of The American Society of Mechanical Engineers. All rights reserved.

Figure 14-5. Powered vacuum lifting devices.

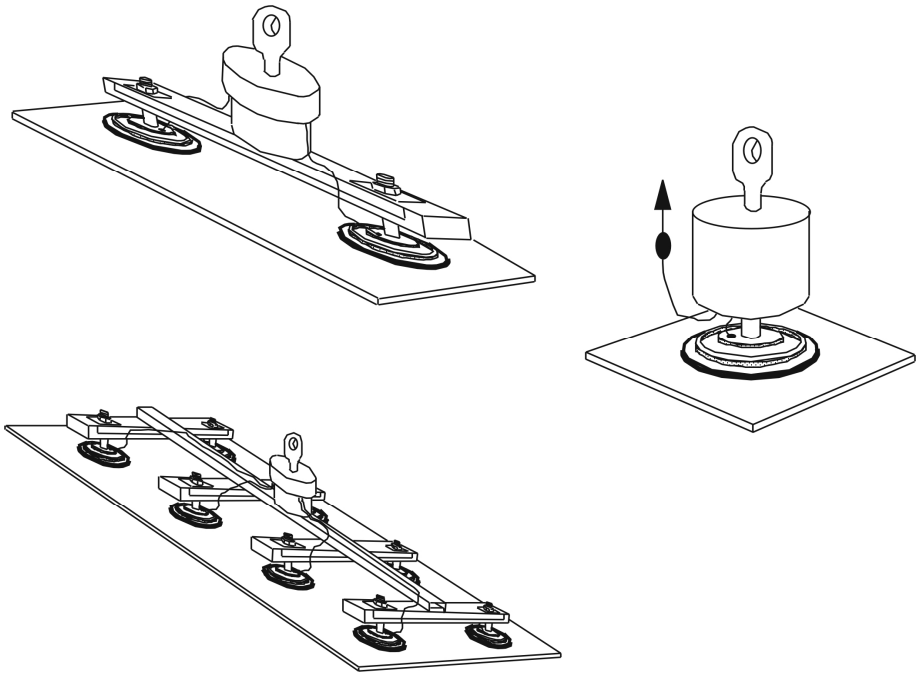

Reprinted from ASME B30.20-2006 by permission of The American Society of Mechanical Engineers. All rights reserved.

Figure 14-6. Mechanical vacuum lifting devices.

14.3 VACUUM LIFTING DEVICES

14.3.3 INSTALLATION

a. Vacuum lifting devices shall be assembled and installed in accordance with the manufacturer's instructions.

b. The power supply to the vacuum lifting device shall be the same as that shown on the nameplate and shall be connected to the line side of the crane disconnect or to an independent circuit.

c. The user shall check for correct rotation of all pumps.

14.3.4 INSPECTIONS

14.3.4.1 Initial Inspection

Prior to their initial use, a qualified inspector shall inspect all new or repaired vacuum lifting devices to ensure their compliance with Section 14.3.4.3, "Periodic Inspection."

14.3.4.2 Frequent Inspection

a. The operator or other designated person shall inspect each vacuum lifting device at the beginning of each shift or prior to use, if it has not been in regular service.

b. The inspection shall be for the following (records are not required):

   1. Deformation, cracks, and excessive wear of load-bearing parts.

   2. Adequate vacuum generator output.

   3. Cuts, tears, excessive wear, and foreign particles at vacuum pad seal rings.

   4. Leakage, cuts, kinks, and collapsed areas of vacuum lines/connections.

   5. Leaks or damage to the vacuum reservoir.

   6. Failure of the entire vacuum system to function properly by attaching a non-porous, clean test plate to the vacuum pads and then stopping the vacuum source. Vacuum levels in the system shall not decrease by more than the manufacturer's specified rate.

14.3.4.3 Periodic Inspection

a. A qualified inspector shall perform a complete inspection at the following intervals:

   1. Normal service – yearly. Inspect equipment at site of use.

   2. Heavy service – semiannually. Inspect equipment at site of use unless external conditions indicate that disassembly should be done to permit detailed inspection.

   3. Severe service – quarterly. Inspect equipment at site of use unless external conditions indicate that disassembly should be done to permit detailed inspection.

   4. Special or infrequent service – as recommended by a qualified person before the first use and as directed by the qualified person for any subsequent occurrences.

b. Lifting device service is defined as follows:

   1. Normal – operation with various weights within the rated load limit, or uniform loads less than 65 percent of rated load.

   2. Heavy – operation within the rated load limit that exceeds normal service.

   3. Severe – operation under normal or heavy service with abnormal operating conditions.

c. This inspection shall include those conditions or items specified in Section 14.3.4.2, "Frequent Inspection," in addition to the following:

   1. External evidence of looseness, wear, deformation, cracking, or corrosion.

2. External evidence of damage to supporting structure, motors, controls, and other auxiliary components.

3. Check for suspect/counterfeit parts (see Terminology and Definitions, Chapter 1).

4. Presence of warning label required by Section 14.3.2, "Marking."

d. A qualified inspector shall inspect fixtures not in regular use according to periodic inspection requirements before placing them in service.

e. Dated inspection reports shall be prepared for each inspection. Inspection records shall be kept on file and shall be readily available.

14.3.5 TESTING

14.3.5.1 Operational Test

a. All new, reinstalled, modified, or repaired vacuum lifting fixtures shall be tested prior to use. Tests shall be performed by a qualified inspector or under the direction of that inspector to ensure compliance with the requirements of this section. Dated reports shall be dept on file.

b. Testing shall include the following:

1. Seals and connections shall be tested for leaks by attaching a nonporous, clean test plate to the vacuum pads and then stopping the vacuum source. Vacuum level in the system shall not decrease by more than the rate specified by the manufacturer.

2. Test indicator lights, gauges, horns, bells, pointers, or other warning devices and vacuum level indicators for proper operation.

14.3.5.2 Rated Load Test

a. All new, reinstalled, repaired, or modified vacuum lifting devices shall be tested and inspected before use. Tests and inspections shall be performed by a qualified inspector or under the direction of that inspector. Test and inspection results shall be documented and kept on file.

b. The rated capacity shall not be more than 80 percent of the maximum load sustained during the test. Test loads shall not be more than 125 percent of the rated capacity unless otherwise recommended by the manufacturer. Test weights shall be accurate to within -5 percent, +0 percent of stipulated values.

c. The rated load test shall consist of the following steps at a minimum:

1. Attach pads to the designated test load.

2. Raise the test load a minimum distance to ensure that it is supported by the vacuum lifting device, and hold it for 2 minutes.

3. Remain clear of the suspended load.

4. Lower and release the load.

5. Visually inspect the vacuum lifting device for defects, and correct any deficiencies prior to returning the device to service.

14.3.6 MAINTENANCE

a. A preventive maintenance program shall be established and be based on recommendations made by the vacuum lifting device manufacturer or a qualified person.

b. Replacement parts shall be equivalent to the original specifications.

c. The vacuum generator, vacuum pads, sealing rings, mufflers, and filters shall be maintained and cleaned according to the manufacturer's specifications.

14.3.7 TRAINING/ QUALIFICATION

a. Vacuum lifting device operators shall be trained and qualified as specified in Chapter 6, "Personnel Qualification and Training." At a minimum, instruction shall include the following (as applicable):

1. Application of the lifting device to the load and adjustments of the device, if any, that adapt it to various sizes or kinds of loads.

2. Any special operations or precautions.

3. Condition of the load itself required for operation of the lifting device such as balance, degree of order of stacked loads, surface cleanliness, bending, and load thickness.

4. Procedure for storage of lifting device to protect it from damage.

5. Instructions for not exceeding the rated capacity of the lifting device or the capacity of the hoisting equipment by the combined weight of the load, the lifting device, and the rigging.

6. Charging of the battery (if required).

7. The purpose of indicators, meters, or alarms on the vacuum lifting device.

8. The proper attachment of adaptors to vacuum lifting devices for handling of special loads.

b. Users shall demonstrate the ability and competence to operate the lifting device as instructed before assuming responsibility for using it.

14.3.8 OPERATION

a. Only the following personnel shall operate vacuum lifting devices:

1. Qualified operators or riggers.

2. Trainees under the direct supervision of a qualified operator.

3. Maintenance and test personnel, when it is necessary in the performance of their duties.

4. Inspectors of lifting devices.

b. The following shall apply to all personnel who operate vacuum lifting devices:

1. Before starting the lift, verify that the "vacuum on" indicator has reached the required level. Also, verify that the vacuum lifting device has been correctly applied and a stable vacuum level exists by lifting the load a few inches and observing conditions.

2. Observe the condition of the lifting device before use and during operation. If you observe a defect that affects the continued safe use of the lifting device, remove it from service.

3. Place any attached load on the floor or ground and, after use, properly store the lifting device before leaving.

4. Before they are used on a shift, test the lifting device controls. If any do not operate properly, adjust or repair them before operations begin.

5. Do not load the lifting device in excess of its rated capacity (except for test loads) or handle any load for which it is not designed.

6. Apply the lifting device to the load in accordance with established procedures.

7. Before lifting, ensure that lifting-device ropes or chains are not kinked and multiple-part lines are not interwoven.

8. Ensure that the load is correctly distributed for the lifting device being used.

9. Do not use the lifting device for side pulls or sliding the load unless specifically authorized by a qualified person or by an approved procedure.

10. Warn all personnel in the vicinity of the lifting device and place the load on the floor or ground, if possible to do so, if electrical power goes off while a load is being lifted.

11. Do not leave your position at the controls.

12. Do not use a lifting device that is tagged "Danger – Do Not Operate" or otherwise designated as nonfunctional.

13. Do not remove "Danger – Do not Operate" tags from lifting devices without the approval of the person who placed them or an authorized person.

14. Store the lifting device in a dry, inside location when not in use.

15. Ensure that markings or tags are not removed or defaced. Replace missing or defaced markings or tags.

14.3.9 CRITICAL LIFTS

See Chapter 2, "Critical Lifts," for critical lift requirements.

a. Vacuum lifting devices for critical-lift service shall have an initial proof-load test of not more than 125 percent of its rated capacity. If proof-testing cannot be verified, the lifting device shall be proof-tested before being used to make a critical lift.

14.4 MAGNETS, CLOSE-PROXIMITY-OPERATED

Close-proximity-operated magnetic lifting devices are used for single- or multiple-steel-piece handling operations in which the operator of the magnet is required to manually guide the load during its movement. They are also used in situations where remotely operated magnets are operated close to people. Typical close-proximity-operated magnetic lifting devices are shown in Figure 14-7.

14.4.1 DESIGN/FABRICATION

Close-proximity-operated magnetic lifting devices shall be designed and fabricated in accordance with the provisions of ASME B30.20, 20-3.2.2 and 20-3.2.3.

14.4.2 MARKING

a. At a minimum, a nameplate, name tag, or other permanent marker shall be affixed to each lifting magnet, and shall display the following data:

   1. Manufacturer's name, or if the magnet has been repaired or modified, the name and address of the repairer/modifier.

   2. Model or unit identification.

   3. Weight.

   4. Duty cycle, if applicable.

   5. Cold current.

   6. Rated capacity.

b. Also, battery-powered and external-powered lifting electromagnets and electrically controlled permanent-magnet lifting magnets shall be marked with:

   1. The voltage of the battery or primary power supply.

   2. The cold current or watts at 68 degrees F (20 degrees C) and rated voltage.

c. Cases may exist where a lifting device cannot be marked with its rated capacity and weight. This may be due to the security classification of the load to be lifted or other reasons approved by the responsible manager. In these cases, the lifting device shall be marked with an identification number, and its documentation shall contain both its rated capacity and weight.

d. A label or labels shall be affixed to each lifting magnet in a readable position that displays the word "CAUTION" or other legend designed to bring the label to the attention of the operator. The label shall also contain information cautioning against:

   1. Operating when the battery capacity is inadequate.

   2. Exceeding magnet duty cycle and disconnecting the magnet with the power on (for externally powered electromagnets).

   3. Operating if the internal control function indicator, where applicable, does not indicate a complete cycle (on electrically controlled permanent magnets).

   4. Operating with the control handle not fully in the "Lift" position (on manually controlled permanent magnets).

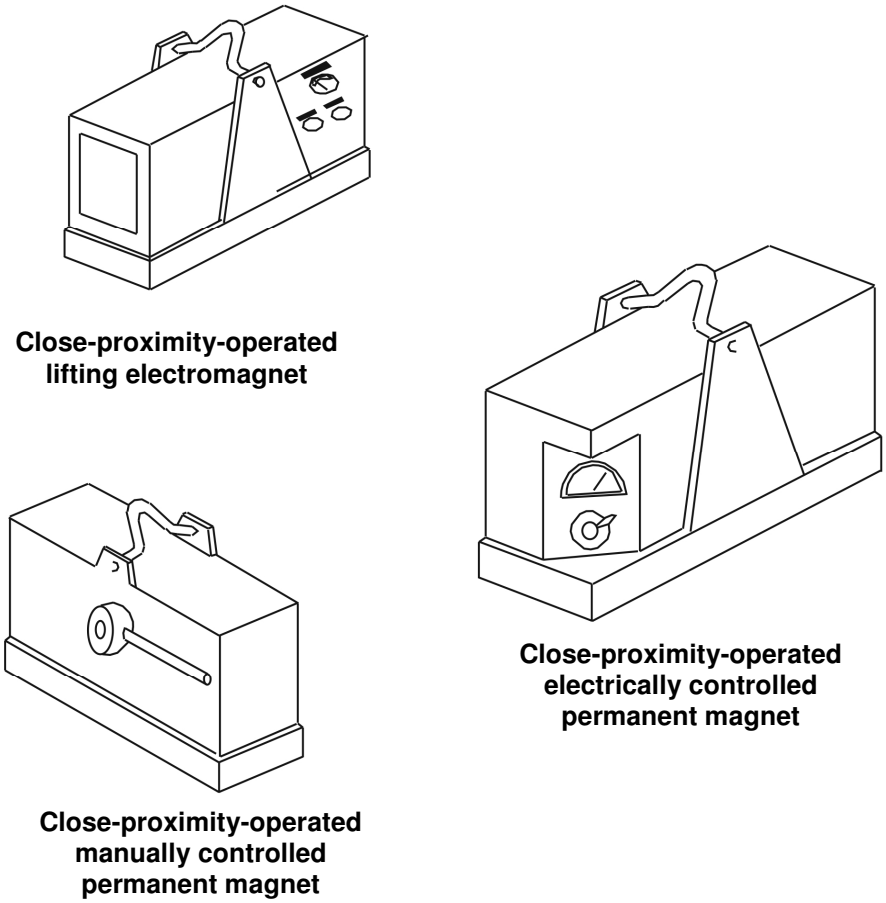

Reprinted from ASME B30.20-2006 by permission of The American Society of Mechanical Engineers. All rights reserved.

Figure 14-7. Close-proximity-operated magnetic lifting devices.

14.4.2.1 Rated Load (Capacity)

a. General-application magnets shall include the rated load (capacity) of the magnet on the lifting magnet or on a tag attached to it. This capacity rating shall refer to the instruction manual for information relating to decreases in rating due to the load surface condition, thickness, percentage of contact with magnet, temperature, metallurgical composition, and deflection.

b. Specified-application magnets shall include the application load (capacity) of the magnet on the lifting magnet or on a tag attached to it. This capacity rating shall refer to the specific loads for which it applies.

14.4.2.2 Controls

The position of the control switch or handle of a lifting magnet shall be marked with "Lift," "Off," and "Drop," or equivalent terms indicating the mode of operation of the lifting magnet.

14.4.3 INSTALLATION

a. Close-proximity-operated magnetic lifting devices shall be installed according to the manufacturer's recommendations.

b. Users shall ensure that:

   1. External power input is the correct voltage and amperage.

   2. Power conductors and controls are of adequate rating and are insulated or otherwise protected against accidental interruption or damage.

14.4.4 INSPECTIONS

14.4.4.1 Initial Inspection

Prior to their initial use, a qualified inspector shall inspect all new, modified, or repaired lifting magnets to ensure compliance with Section 14.4.4.3, "Periodic Inspection."

14.4.4.2 Frequent Inspection

a. The operator or other designated person shall visually inspect each magnetic lifting device at the beginning of each shift or prior to use, if it has not been in regular service.

b. The inspection shall be for the following (records are not required):

   1. Lifting magnet face for freedom from foreign materials and for smoothness.

   2. Lifting bail or sling suspension for proper condition.

   3. Control handle for proper condition and operation.

   4. Current indicator, where applicable, for proper condition and operation.

   5. Labels, markings, and indicators or meters for legibility.

   6. Electrical conductors, if applicable, for loose connections, continuity, corrosion, and damage to insulation.

   7. Battery for correct electrolyte level and lack of corrosion of battery posts or connectors, if applicable.

14.4.4.3 Periodic Inspection

a. A qualified inspector shall perform a complete inspection with the equipment in place at the following intervals:

   1. Normal service – yearly.

   2. Heavy service – yearly.

   3. Severe service – quarterly.

b. Lifting device service is defined as:

   1. Normal – operation with various weights within the rated load limit, or uniform loads less than 65 percent of rated load.

   2. Heavy – operation within the rated load limit that exceeds normal service.

   3. Severe – operation under normal or heavy service with abnormal operating conditions.

c. This inspection shall include those items specified in Section 14.4.4.2, "Frequent Inspection," in addition to the following:

   1. Deformation, wear, and corrosion of all members, fasteners, locks, switches, warning labels, and lifting parts.

   2. Check for suspect/counterfeit parts (see Terminology and Definitions, Chapter 1).

   3. Operation and condition of electrical components (i.e., meters, indicators, and alarms).

   4. Magnet coil tested for ohmic/ground readings and readings compared to manufacturer's standards.

d. A qualified inspector shall inspect a lifting magnet that has been idle for 1 month or more according to periodic inspection requirements before placing it in service.

e. Dated inspection reports shall be prepared for each inspection. Inspection records shall be kept on file and shall be readily available.

14.4.5 TESTING

14.4.5.1 Operational Test

a. All new, modified, or repaired lifting magnets shall be tested prior to their initial use. Tests shall be performed by a qualified inspector or under the direction of that inspector. Dated reports shall be kept on file.

b. Testing shall include the following:

   1. A check to ensure that the lifting magnet contains no visible defects.

   2. A check for proper operation of all electrical protective equipment, meters, indicators, alarms, etc.

14.4.5.2 Rated Load Test

a. All new, modified, or repaired lifting magnets shall be tested and inspected before initial use. Tests and inspections shall be performed by a qualified inspector or under the direction of that inspector. Test and inspection results shall be documented and kept on file.

b. General-application magnets are required to satisfy the rated breakaway-force test. The breakaway force measured in this test must exceed the rated load (capacity) by a factor of at least 2.

c. Specified-application magnets are required to comply with the application breakaway-force test. The breakaway forces measured in this test must exceed the specified application load (capacity) by a factor of at least 2.

d. The rated breakaway-force test shall establish the breakaway force required to vertically remove the lifting magnet from a low-carbon rolled-steel plate of the minimum thickness stated by the magnet manufacturer. The portion of this plate in contact with the magnet shall have a 125-µin. (3.2×10^{-3} mm) finish and be flat within 0.002 in./ft (0.05 mm/m), but not exceeding 0.005 in. (0.127 mm) total. The full operating face of the lifting magnet shall be in contact with the steel plate, which shall be between 60 degrees F (15 degrees C). Battery-operated electromagnets and external-powered lifting electromagnets shall be operated at the manufacturer's recommended current.

e. The application breakaway-force test shall establish the application breakaway forces of the lifting magnet under the variety of loading conditions for which the magnet is specified. The details of this test should be supplied by the manufacturer of the lifting magnet.

14.4.6 MAINTENANCE

a. A preventive maintenance program shall be established and be based on recommendations made by the manufacturer or a qualified person.

b. Replacement parts shall be equivalent to the original specifications.

c. Before adjustment and repairs are started on a lifting magnet or its controls, maintenance personnel shall take the following precautions:

1. Ensure that all sources of magnet power are disconnected and locked out, tagged out, or flagged.

2. Ensure that a magnet removed for repair is tagged as defective.

d. Only qualified personnel shall work on equipment when adjustments and tests are required.

e. After adjustments and repairs have been made, the lifting magnet shall not be returned to service until it has been inspected according to Section 14.4.4.3.

f. Dated records of repairs and replacements shall be available.

g. Maintenance personnel shall ensure that any defective condition disclosed by the inspection is corrected before operation of the lifting magnet is resumed. Repairs shall be done only by designated persons.

14.4.7 TRAINING/ QUALIFICATION

a. Magnetic lifting device operators shall be trained and qualified as specified in Chapter 6, "Personnel Qualification and Training." At a minimum, instruction shall include the following:

1. Application of the lifting device to the load and adjustments of the device, if any, that adapt it to various sizes or kinds of loads.

2. Any special operations or precautions.

3. Condition of the load itself required for operation of the lifting device such as balance, degree of order of stacked loads, surface cleanliness, bending, and load thickness.

4. Procedure for storage of lifting device to protect it from damage.

5. Instructions for not exceeding the rated capacity of the lifting device or the capacity of the hoisting equipment by the combined weight of the load, the lifting device, and the rigging.

6. Charging of the lifting magnet battery (if required).

7. The purpose of indicators, meters, or alarms on the lifting magnet.

8. The proper attachment of adaptors to lifting magnets for handling of special loads.

b. Operators shall demonstrate the ability and competence to operate the lifting device as instructed before assuming responsibility for using it.

14.4.8 OPERATION

a. Only the following qualified personnel shall operate lifting devices:

1. Designated persons.

2. Trainees under the direct supervision of a designated person.

3. Maintenance and test personnel, when it is necessary in the performance of their duties.

4. Inspectors of lifting devices.

b. The following shall apply to personnel who use close-proximity-operated magnets:

1. Place any attached load on the floor or ground and, after use, properly store the lifting device before leaving it.

2. Before they are used during a shift, test all controls. If any do not operate properly, adjust or repair them before operations begin.

3. Do not load the lifting device in excess of its rated capacity or handle any load for which it is not designed.

4. Apply the lifting device to the load in accordance with established procedures.

5. Before lifting, ensure that lifting-device ropes or chains are not kinked and that multiple-part lines are not interwoven.

6. Ensure that the load is correctly distributed for the lifting device being used.

7. Ensure that the temperature of the load does not exceed the maximum allowable limits of the lifting device.

8. Do not use the lifting device for side pulls or sliding the load unless specifically authorized by a qualified person.

9. Keep the lifting magnet face and the magnet contact area clean.

10. Ensure that the load to be lifted is within the magnet's rated capacity or application capacity and lifting equipment rated capacity.

11. Observe all meters and indicators on the lifting magnet to confirm proper operation prior to making a lift.

12. Before starting the lift, lift the load a few inches to establish that it is securely attached to the magnet.

13. Do not use a lifting magnet that is tagged "Danger – Do Not Operate" or otherwise designated as nonfunctional.

14. Do not remove "Danger – Do Not Operate" tags from magnetic lifting devices without the approval of the person who placed them or an authorized person.

15. Store the lifting device in a dry, inside location when not in use.

14.4.8.1 External-Powered Electromagnets

Before raising the load more than 2 in (50 mm), ensure that any adjustable input control is switched to the "FULL POWER" or "FULL ON" position and remains in this position until the load is removed from the magnet.

14.4.8.2 Battery-Operated Electromagnets

a. Before lifting, confirm that the device indicating correct current flow remains stable for a minimum of 5 seconds.

b. For a lift of extended duration, observe the device indicating correct current flow every 5 minutes.

c. Open the ventilation lid before charging the battery.

d. Before raising the load more than 2 inches (50 mm), ensure that nay adjustable input control is switched to the "FULL POWER" or "FULL ON" position and remains in this position until the load is removed.

14.4.8.3 Electrically Controlled Permanent Magnets.

Before raising the load, check the internal control function indicator, where applicable, to confirm proper operation of the lifting magnet.

14.4.8.4 Manually Controlled Permanent Magnets

Before raising the load, confirm that the control handle is in the "LIFT" or "ON" position and the control handle latch is operating.

14.4.9 CRITICAL LIFTS

Se Chapter 2, "Critical Lifts," for critical lift requirements.

a. General-application magnets are required to satisfy the rated breakaway-force test. The breakaway force measured in this test must exceed 200 percent of the rated load. If the rated breakaway-force test cannot be verified, the lifting device shall be required to satisfy the rated breakaway-force test before being used to make a critical lift.

b. Specified-application magnets are required to satisfy the rated breakaway-force test. The breakaway force measured in this test must exceed 200 percent of the rated load. If the rated breakaway-force test cannot be verified, the lifting device shall be required to satisfy the rated breakaway-force test before being used to make a critical lift.

14.5 MAGNETS, REMOTE-OPERATED

Typical remote-operated magnetic lifting devices are shown in Figure 14-8.

14.5.1 DESIGN/FABRICATION

Remote-operated magnetic lifting devices shall be designed and fabricated in accordance with the provisions of ASME B30.20, 20-4.2.2.

14.5.2 MARKING

a. At a minimum, all new lifting magnets shall be provided with a nameplate, mane tag, or other permanent marker displaying the following information.

   1. Manufacturer's name and address, or if the magnet has been repaired or modified, the name and address of the repairer/modifier.

   2. Manufacturer's model or unit identification.

   3. Weight.

   4. Duty cycle, if applicable.

   5. Cold current.

b. Cases may exist where a lifting device cannot be marked with its rated capacity and weight. This may be due to the security classification of the load to be lifted, or other reasons approved by the responsible manager. In these cases, the lifting device shall be marked with an identification number, and its documentation shall contain both its rated capacity and weight.

14.5.3 INSTALLATION

a. Remote-operated magnets shall be installed according to the manufacturer's recommendations.

b. Operators shall ensure that:

   1. External power input is of the correct voltage and amperage.

   2. Power conductors and controls are of adequate rating and are insulated or otherwise protected against accidental interruption or damage.

14.5.4 INSPECTIONS

14.5.4.1 Initial Inspection

Prior to their initial use, a qualified inspector shall inspect all new, modified, or repaired lifting magnets to ensure compliance with Section 14.5.4.3, "Periodic Inspection."

14.5.4.2 Frequent Inspection

a. The operator or other designated personnel shall visually inspect each magnetic lifting device at the beginning of each shift or prior to use, if it has not been in regular service.

b. The inspection shall be for the following (records are not required):

   1. Lifting magnet face for smoothness or presence of foreign materials, if applicable.

   2. Magnet suspension system.

   3. All visible electrical conductors (without disassembly).

14.5.4.3 Periodic Inspection

a. A qualified inspector shall perform a complete inspection of the lifting device with the equipment in place at the following intervals:

   1. Normal service – yearly.

   2. Heavy Service – quarterly.

   3. Severe service – quarterly.

   4. Special or infrequent service – as authorized by a qualified person before the first use and as directed by the qualified for any subsequent occurrences.

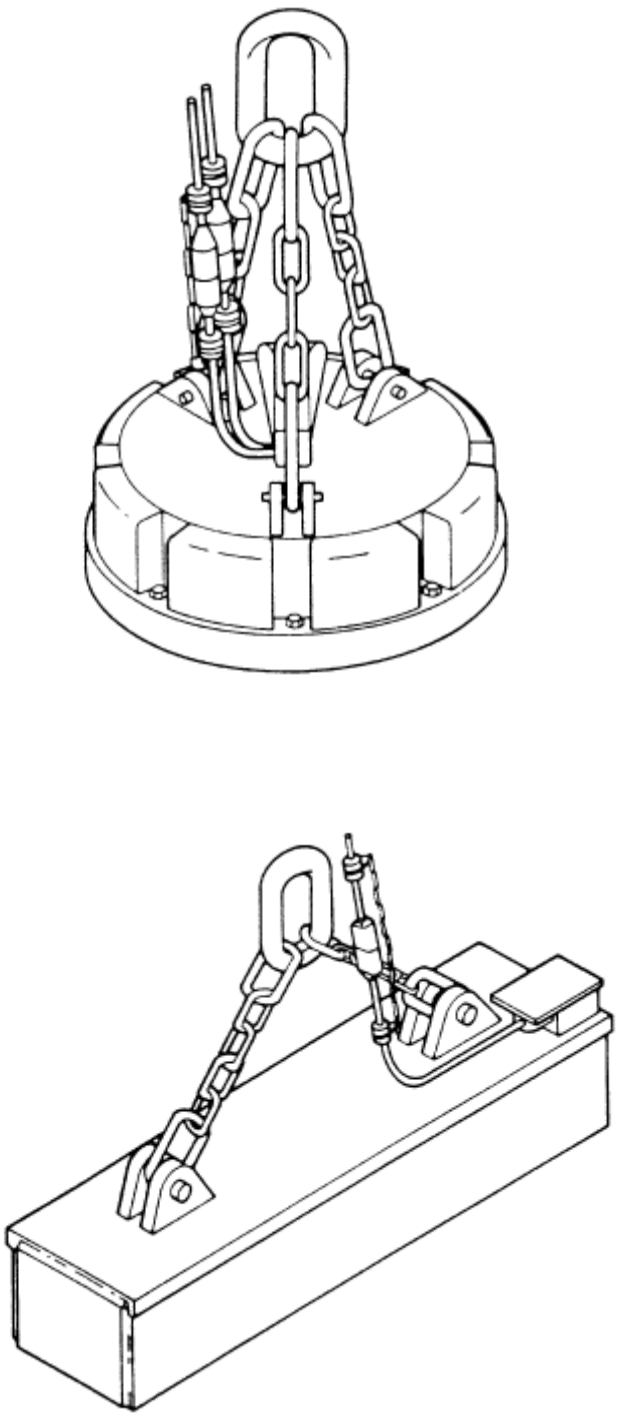

Reprinted from ASME B30.20-2006 by permission of The American Society of Mechanical Engineers. All rights reserved.

Figure 14-8. Remote-operated magnetic lifting devices.

b. Lifting device service is defined as follows:

1. Normal – operation with various weights within the rated load limit, or uniform loads less than 65 percent of rated load.

2. Heavy – operation within the rated load limit that exceeds normal service.

3. Severe – operation under normal or heavy service with abnormal operating conditions.

c. This inspection shall include those items specified in Section 14.5.4.2, "Frequent Inspection," in addition to the following:

1. Deformation, wear, and corrosion of all members, fasteners, and lifting parts.

2. Check for suspect/counterfeit parts (see Terminology and Definitions, Chapter 1).

3. Proper operation and condition of electrical components.

4. Magnetic coil tested for ohmic/ground readings and compared to manufacturer's standards.

d. Dated inspection reports shall be prepared for each inspection. Inspection records shall be kept on file and shall be readily available.

14.5.5 TESTING

14.5.5.1 Operational Test

a. All new, modified, or repaired lifting magnets shall be tested prior to initial use. Tests shall be performed by a qualified inspector or under the direction of that inspector. Dated reports shall be kept on file.

b. Testing shall include the following:

1. A check for proper operation of all electrical equipment.

2. A visual inspection of the lifting magnet for visible defects.

14.5.6 MAINTENANCE

a. A preventive maintenance program shall be established and be based on the recommendations of the manufacturer or a qualified person.

b. Replacement parts shall be equivalent to original specifications.

c. Before maintenance is started on a lifting magnet or controls, maintenance personnel shall take the following precautions:

1. Ensure that all sources of magnet power are disconnected and locked out, tagged out, or flagged.

2. Ensure that a magnet removed for repair is tagged as defective.

d. Only qualified personnel shall work on equipment when maintenance and test are required.

e. After repairs have been made, the lifting magnet shall not be returned to service until it has been inspected according to Section 14.5.4.3.

f. Dated records of repairs and replacements shall be available.

g. Any defective condition disclosed by the inspection shall be corrected before the lifting magnet is returned to service.

14.5.7 TRAINING/ QUALIFICATION

a. Operators shall be trained and qualified as specific in Chapter 6, "Personnel Qualification and Training." At a minimum, instruction shall include the following:

1. Application of the lifting device to the load and adjustments of the device, if any, that adapt it to various sizes or kinds of loads.

2. Any special operations or precautions.

3. Condition of the load itself required for operation of the lifting device, such as balance, degree of order of stacked

loads, surface cleanliness, bending, and load thickness.

4. Procedure for storage of the lifting device to protect it from damage.

5. Instructions for not exceeding the rated capacity of the lifting device or the capacity of the hoisting equipment by the combined weight of the load, the lifting device, and the rigging.

6. Charging of the lifting magnet battery (if required).

7. The purpose of indicators, meters, or alarms on the lifting magnet.

8. The proper attachment of adaptors to lifting magnets for handling of special loads.

b. Operators shall demonstrate the ability and competence to operate the lifting device as instructed before assuming responsibility for using it.

14.5.8 OPERATION

a. Only the following qualified personnel shall operate lifting devices:

1. Designated persons.

2. Trainees under the direct supervision of a designated person.

3. Maintenance and test personnel, when it is necessary in the performance of their duties.

4. Inspectors of lifting devices.

b. The following shall apply to all personnel who operate remote-operated magnets:

1. Place any attached load on the floor or ground and, after use, properly store the lifting device before leaving it.

2. Before they are used during a shift, test all controls. If any do not operate properly, adjust or repair them before operations begin.

3. Do not load the lifting device in excess of its rated capacity or handle any load for which it is not designed.

4. Apply the lifting device to the load in accordance with established procedures.

5. Before lifting, ensure that lifting-device ropes or chains are not kinked and that multiple-part lines are not interwoven.

6. Ensure that the load is correctly distributed for the lifting device being used.

7. Ensure that the temperature of the load does not exceed the maximum allowable limits of the lifting device.

8. Do not use the lifting device for side pulls or sliding the load unless specifically authorized by a qualified person.

9. Do not use a lifting magnet that is tagged “Danger – Do Not Operate” or otherwise designated as nonfunctional.

10. Do not remove “Danger – Do Not Operate” tags without the approval of the person who placed them or an authorized person.

11. Store the lifting device in a designated location when not in use.

14.5.9 CRITICAL LIFTS

See Chapter 2, “Critical Lifts,” for critical lift requirements.

a. Remote-operated magnets for critical-lift service shall have been tested for proper operation of all electrical equipment and a visual inspection of the lifting device for defects. If testing and inspection cannot be verified, the lifting device shall be tested and inspected before being used to make a critical lift.

Exhibit I is intended to be a sample form only.
The equipment manufacturer's inspection/testing
criteria supercede any other criteria.
In cases where the equipment manufacturer does not include
inspection/testing criteria, other forms developed to facilitate
required inspection/testing are acceptable.

INTENTIONALLY BLANK

EXHIBIT I
(SAMPLE FORM)

LIFTING BARS AND SPREADERS LOAD TEST

INSPECTOR:_____ INSPECTION DATE:_____

NOTES:
1. Proof-test to not more than 125 percent f rated capacity for critical lift service. The test load shall be accurate to within –5%, +0% of stipulated values.
2. Qualified inspector shall witness all steps below.

INSPECTION

Lifting bars and spreaders shall be checked for signs of incipient failure in bending and shall be replaced if permanently bent more than ½ inch in 10 feet, or twisted more than 5 degrees out of the original plan. Hook attachment welds shall be examined for cracks and signs of failure in tension.

Qualified inspector shall perform test by visual examination, liquid-penetrant examination, or magnetic-particle examination.

Acceptance: No cracks, linear indication, laps, or seams.

STATIC TEST: Hold weight for 10 minutes and visually inspect for deformation.

Type_____ Size _____

Rated Capacity (SWL) _____lb Actual Load Test _____lb

Serial Number _____

Qualified Inspector Verify (Load Test) _____

Remarks _____
_____
_____

INTENTIONALLY BLANK

CHAPTER 15
CONSTRUCTION HOISTING AND RIGGING EQUIPMENT REQUIREMENTS

This chapter outlines the requirements for the safe use of hoisting and rigging equipment on construction projects at DOE installations.

15.1 GENERAL 15-1

15.2 PERSONNEL QUALIFICATIONS 15-2
- 15.2.1 Qualified Operators of Mobile Cranes 15-2
- 15.2.2 Qualified Operators of Forklift Trucks 15-3
- 15.2.3 Qualified Riggers 15-4
- 15.2.4 Person-in-Charge (PIC) 15-4
- 15.2.5 Designated Leader 15-5
- 15.2.6 Inspector 15-5
- 15.2.7 Maintenance 15-5

15.3 INSPECTION AND TESTING 15-6

15.4 OPERATION 15-7
- 15.4.1 General 15-7
- 15.4.2 Wire Rope Slings 15-7

15.5 STEEL ERECTION 15-8
- 15.5.1 General 15-8
- 15.5.2 Definitions 15-8
- 15.5.3 Pre-Shift Inspection of Cranes 15-8
- 15.5.4 Qualified Rigger 15-9
- 15.5.5 Lifting Personnel 15-9
- 15.5.6 Safety Latches 15-9
- 15.5.7 Working Under Loads 15-9
- 15.5.8 Multiple Load Lifts 15-9

INTENTIONALLY BLANK

15.1 GENERAL

a. The versatility of hoisting and rigging equipment makes it extremely useful on construction projects. Improper and unsafe use, however, can result in serious accidents.

b. This chapter outlines the requirements for lifting service on construction and demolition activities and provides references to other chapters of this Standard applicable to the use of hoisting and rigging equipment at construction projects on DOE installations.

c. The following chapters of this Standard are applicable to construction hoisting and rigging operations:

1. Chapter 1 "*Terminology and Definitions*,"
2. Chapter 2 "*Critical Lifts*,"
3. Chapter 4 "*Lifting Personnel*,"
4. Chapter 7 "*Overhead and Gantry Cranes*,"
5. Chapter 8 "*Hoists*,"
6. Chapter 9 "*Mobile Cranes*,"
7. Chapter 10 "*Forklift Trucks*,"
8. Chapter 11 "*Wire Rope and Slings*,"
9. Chapter 12 "*Rigging Accessories*,"
10. Chapter 13 "*Hooks*,"
11. Chapter 14 "*Below-the-Hook Lifting Devices*,"
12. Chapter 16 "*Miscellaneous Lifting Devices*."

15.2 PERSONNEL QUALIFICATIONS

15.2.1 QUALIFIED OPERATORS OF MOBILE CRANES

a. Only qualified personnel or trainees, under the direct supervision of qualified personnel, who meet the following physical qualifications and requirements shall be allowed to operate mobile cranes:

1. Be at least 18 years of age.

2. Understand spoken and written English.

3. Have vision of at least 20/30 Snellen in one eye, and 20/50 in the other, with or without corrective lenses.

4. Be able to distinguish colors, regardless of position, if color differentials required for operation.

5. Have adequate hearing, with or without a hearing aid, for a specific operation.

6. Have physical strength, coordination, and sufficient reaction speed to meet the demands of equipment operation.

7. Show no evidence of physical defects or of emotional instability that could be a hazard to themselves or others, or which, in the opinion of the examiner, could interfere with their safe performance; such evidence may be sufficient cause for disqualification. In these cases, medical judgments and test may be required.

8. Show no evidence of being subject to seizures or loss of physical control; such evidence shall be sufficient reason for disqualification. Medical examinations may be required to determine these conditions.

9. Have normal depth perception, field of vision, manual dexterity, coordination, and no tendencies to dizziness or similar potentially hazardous characteristics.

10. Have no detectable or known disease or physical restriction that would render them incapable of safely operating equipment. Where any deficiency of an upper or lower extremity exists, the acceptability of a candidate shall be the decision of the supervisor, after consulting with the designated physician.

11. Shall successfully pass with a negative result, a substance abuse test. The level of testing will be determined by the standard practice for the industry where the crane is employed and this test shall be confirmed by a recognized laboratory service.

12. Operator physical examinations shall be required every three years or more frequently if supervision deems it necessary.

b. Prior to allowing mobile crane operations at DOE installations, the construction manager shall implement a program or ensure that the construction contractor has an acceptable program to evaluate crane operator qualifications. This program shall include written testing to evaluate operator knowledge and performance ("hands-on") testing to evaluate operator skills. These tests shall include, but not be limited to applicable elements of the following:

1. Pre-use crane inspection.

2. The crane's specifications, operator's manual, charts (e.g., load charts, work area charts), instrumentation, controls, operator aids, and operating characteristics.

3. Operating procedures under emergency conditions.

4. Set-up, shut-down and parking of the crane.

5. Crane attachments (e.g., jibs, boom extensions, heavy lift equipment).

6. Configurations and loading effects on the crane.

7. Standards, rules and regulations (e.g., hand signals, distances for working around electrical power lines).

8. Rigging practices.

9. Personnel lifting procedures.

NOTE: The means of determining operator qualifications shall be included in the contract documents. Contract documents shall also include requirements for maintenance of testing records. Consideration should be given to local, state, or federal crane operator licensing requirements within the work jurisdiction as well as certification programs administered by recognized private organizations.

15.2.2 QUALIFIED OPERATORS OF FORKLIFT TRUCKS

a. Physical qualifications shall be based on specific job requirements.

b. Operators shall be required by the employer to pass a practical operating skill evaluation. Qualification shall be limited to the type of forklift for which the operator is being evaluated.

c. The actual or simulated operation shall enable operators to demonstrate basic knowledge and skills at a level that ensures the safety of personnel and equipment.

d. Only qualified and authorized operators shall be permitted to operate powered forklift trucks. Operator trainees may operate powered forklift trucks under the direct supervision of a qualified operator or trainer and only where such operation does not endanger the trainee or other employees.

e. The initial training of operators shall include:

   1. A combination of formal instruction (e.g., lecture, discussion, interactive computer learning, video tape, written material).

   2. Practical training (demonstrations performed by the trainer and practical exercises performed by the trainee).

   3. Evaluation of the operator's performance in the workplace, including results of written and oral evaluation, and witnessing a demonstration of the operator's skills.

f. The following checklist contains basic factors with which a forklift truck operator should be familiar. This checklist must be tailored to suit actual conditions.

   1. Operating instruction, warnings, and precautions for the type of forklift truck the operator will be authorized to operate.

   2. Differences between the forklift truck and the automobile.

   3. Forklift truck controls and instrumentation:

      i. Where they are located.

      ii. What they do.

      iii. How they work.

   4. Engine or motor operation.

   5. Steering and maneuvering.

   6. Visibility, including restrictions due to loading.

   7. Fork and attachment adaptation, operation, and use limitations.

   8. Forklift truck capacity and load weight determination.

   9. Forklift truck stability and load dynamics.

   10. Forklift truck inspections and maintenance that the operator will be required to perform.

   11. Refueling and/or charging and recharging of batteries.

   12. Operating limitations.

   13. Any other operating instructions, warning, or precautions listed in the operator's manual for the type of forklift truck that the employee is being trained to operate.

g. The following checklist contains basic factors with which a forklift operator should be familiar as they relate to workplace topics.

   1. Surface conditions where the forklift will be operated.

   2. Composition of loads to be carried and load stability.

   3. Load manipulation, stacking, and unstacking.

   4. Pedestrian traffic in areas where the forklift

   5. Narrow aisles and other restricted places where the forklift will be operated.

   6. Hazardous (classified) locations where the forklift will be operated.

   7. Ramps and other sloped surfaces that could affect the forklift's stability.

   8. Closed environments and other areas where insufficient ventilation or poor vehicle maintenance could cause a buildup of carbon monoxide or diesel exhaust.

   9. Other unique or potentially hazardous environmental conditions in the workplace that could affect safe operation.

h. Refresher training in relevant topics shall be provided to the operator when:

   1. The operator has been observed to operate the forklift truck in an unsafe manner.

   2. The operator has been involved in an accident or near-miss incident.

   3. The operator has received an evaluation that reveals that the operator is not operating the forklift truck safely.

   4. The operator is assigned to drive a different type of forklift truck.

   5. A condition in the workplace changes in a manner that could affect the safe operation of the forklift truck.

15.2.3 QUALIFIED RIGGERS

Qualified riggers shall meet the following requirements:

a. Be at least 18 years of age.

b. Understand spoken and written English.

c. Have basic knowledge and understanding of equipment-operating characteristics, capabilities, and limitations. Understand rigging principles as applied to the job for which they are to be qualified.

d. Demonstrate to appropriate management personnel skill in using rigging principles.

e. Be free of any detectable or known disease or physical restriction that would render them incapable of safe operating or rigging duties. Where any loss or loss of function of an upper or lower extremity exists, the acceptability of the candidate shall be the decision of the supervisor, after consulting with the designated physician.

f. Have normal depth perception, field of vision, reaction time, manual dexterity, and coordination.

15.2.4 PERSON-IN-CHARGE (PIC)

The PIC shall have the necessary knowledge and experience of the specific type of equipment and the hazards of critical lifts to direct the safe completion of the operation. The PIC shall understand the rules and procedures implemented at the site to ensure that the following are completed:

a. Necessary administrative requirements.

b. Personnel assignments and responsibilities.

c. Selection of proper equipment/tools.

d. Recognition and control of hazardous or unsafe conditions.

e. Job efficiency and safety.

f. Critical-lift documentation.

In addition, the PIC shall:

a. Direct operations in the case of an accident.

b. Exercise authority to start and stop work activities.

15.2.5 DESIGNATED LEADER

The designated leader shall have sufficient knowledge and experience to accomplish the following responsibilities:

a. Ensure that the personnel involved have received proper and current training and qualification for the procedure.

b. Ensure that the equipment and accessories specified in the procedure are available.

c. Survey the lift site for hazardous or unsafe conditions.

d. Ensure that equipment is properly set up and positioned.

e. Ensure that a signaler is assigned, if required, and is identified to the operator.

f. Direct the lifting operation to ensure that the job is done safely and efficiently.

g. Stop the job when any potentially unsafe condition is recognized.

h. Direct operations if an accident or injury occurs.

15.2.6 INSPECTOR

a. Qualified inspectors shall have the necessary knowledge and experience to properly inspect hoisting and rigging equipment.

b. Employees who operate hoisting equipment to perform inspections shall be trained and qualified to operate the equipment on which the inspection is being performed

c. Hoisting equipment operation by inspectors shall be limited to those equipment functions necessary to perform the inspection on the equipment.

15.2.7 MAINTENANCE PERSONNEL

a. Employees who operate hoisting equipment to perform hoisting equipment maintenance shall be trained and qualified to operate the equipment on which maintenance is being performed.

b. Hoisting equipment operation by maintenance personnel shall be limited to those equipment functions necessary to perform maintenance on the hoisting equipment or to verify the performance of the hoisting equipment after maintenance has been performed.

15.3 INSPECTION AND TESTING

a. Only equipment that has been built to nationally recognized manufacturers' standards shall be used at DOE installations. Existing equipment shall be brought to an acceptable level of compliance as determined by the construction management contractor. In some instances, the inspection and testing requirements of referenced applicable chapters of this standard exceed those of OSHA/ASME and in such instances, the requirements of this standard shall prevail.

b. Prior to being used at a DOE installation, mobile cranes/boom trucks/forklift trucks shall be inspected and approved for operation by appropriate construction management contractor personnel, or those having overall responsibility for ordinary hoisting operations.

c. Equipment with deficiencies that may affect the safety of the operation shall not be allowed to operate at DOE installations. No repairs, modifications, or additions that affect the capacity or safe operation of the equipment shall be made by the contractor without the manufacturer's written approval. Where manufacturer's specifications are not available, the limitations assigned to the equipment shall be based on the determinations of a qualified engineer. Dated and signed records shall be kept on file.

d. Mobile cranes, boom trucks, and forklifts that have left the control of the construction management contractor and are then returned shall be reinspected prior to making a critical lift.

.

15.4 OPERATION

15.4.1 GENERAL

The operational requirements of all chapters referenced in Section 15.1 “General” of this standard shall apply to construction hoisting and rigging operations.

15.4.2 WIRE ROPE SLINGS

For construction applications, eyes in wire rope slings, bridles, or bull wires shall not be formed by wire rope clips or knots (refer to 29 CFR 1926.251(c)(4.)(ii)).

15.5 STEEL ERECTION

15.5.1 GENERAL

a. The following hoisting and rigging requirements apply only to steel erection activities as described in 29 CFR 1926.750(a).

b. In addition to the conditions listed under Section 2.1, a lift shall be designated as a critical lift if (1) the lift exceeds 75 percent of the rated capacity of the crane or derrick, or (2) the lift requires the use of more than one crane or derrick (refer to 29 CFR 1926.751).

15.5.2 DEFINITIONS

CONTROLLED LOAD LOWERING: Lowering a load by means of a mechanical hoist drum device that allows a hoisted load to be lowered with maximum control using the gear train or hydraulic components of the hoist mechanism. Controlled load lowering requires the use of the load hoist drive motor, rather than the load hoist brake, to lower the load.

MULTIPLE LIFT RIGGING: Rigging assembly manufactured by wire rope rigging suppliers that facilitates the attachment of up to five independent loads to the hoist rigging of a crane.

STEEL ERECTION: The construction, alteration or repair of steel buildings, bridges and other structures, including the installation of metal decking and all planking used during the process of erection.

15.5.3 PRESHIFT INSPECTION OF CRANES

a. Cranes being used in steel erection activities shall be visually inspected by a competent person prior to each shift. The inspection shall include observation for deficiencies during operation. At a minimum this inspection shall include the following:

   1. All control mechanisms for maladjustments;

   2. Control and drive mechanism for excessive wear of components and contamination by lubricants, water or other foreign matter;

   3. Safety devices, including but not limited to boom angle indicators, boom stops, boom kick out devices, anti-two block devices, and load moment indicators where required;

   4. Air, hydraulic, and other pressurized lines for deterioration or leakage, particularly those which flex in normal operation;

   5. Hooks and latches for deformation, chemical damage, cracks, or wear;

   6. Wire rope reeving for compliance with hoisting equipment manufacturer's specifications;

   7. Electrical apparatus for malfunctioning, signs of excessive deterioration, dirt, or moisture accumulation;

   8. Hydraulic system for proper fluid level;

   9. Tires for proper inflation and conditions;

   10. Ground conditions around the hoisting equipment for proper support, including ground settling under and around outriggers, ground water accumulation, or similar conditions;

   11. The hoisting equipment for level position; and

   12. The hoisting equipment for level position after each move and setup.

b. If any deficiency is identified, an immediate determination shall be made by the competent person as to whether the deficiency constitutes a hazard.

c. If the deficiency is determined to constitute a hazard, the hoisting equipment shall be removed from service until the deficiency has been corrected.

d. The operator shall be responsible for those operations under the operator's direct control. Whenever there is any doubt as to safety, the operator shall have the authority

to stop and refuse to handle loads until safety has been assured.

15.5.4 QUALIFIED RIGGER

A qualified rigger shall inspect the rigging prior to each shift.

15.5.5 LIFTING PERSONNEL

The headache ball, hook or load shall not be used to transport personnel except as provided in Chapter 4 "*Lifting Personnel*."

15.5.6 SAFETY LATCHES

Safety latches on hooks shall not be deactivated or made inoperable except when a qualified rigger has determined that the hoisting and placing of purlins and single joists can be performed more safely by doing so or when equivalent protection is provided in a site-specific erection plan.

15.5.7 WORKING UNDER LOADS

a. Routes for suspended loads shall be pre-planned to ensure that no employee is required to work directly below a suspended load except for:

    1. Employees engaged in the initial connection of the steel; or

    2. Employees necessary for the hooking or unhooking of the load.

b. When working under suspended loads, the following criteria shall be met:

    1. Materials being hoisted shall be rigged to prevent unintentional displacement;

    2. Hooks with self-closing safety latches or their equivalent shall be used to prevent components from slipping out of the hook; and

    3. All loads shall be rigged by a qualified rigger.

15.5.8 MULTIPLE LOAD LIFTS

a. A multiple load lift shall only be performed if the following criteria are met:

    1. A multiple lift rigging assembly is used;

    2. A maximum of five load members are hoisted per lift;

    3. Only beams and similar structural members are lifted; and

    4. All employees engaged in the multiple load lifts shall be trained in the following areas:

        i. The nature of the hazards associated with multiple lifts

        ii. The proper procedures and equipment to perform multiple lifts as required in this section.

    5. No crane is permitted to be used for a multiple load lift where such use is contrary to the manufacturer's specifications and limitations.

b. Components of the multiple lift rigging assembly shall be specifically designed and assembled with a maximum capacity for total assembly and for each individual attachment point. This capacity, certified by the manufacturer or a qualified rigger, shall be based on the manufacturer's specifications with a 5 to 1 safety factor for all components.

c. The total load shall not exceed:

    1. The rated capacity of the hoisting equipment specified in the hoisting equipment load charts.

    2. The rigging capacity specified in the rigging rating chart.

d. The multiple lift rigging assembly shall be rigged with members:

    1. Attached at their center of gravity and maintained reasonably level;

    2. Rigged from top down; and

    3. Rigged at least 7 feet (2.1 m) apart.

4. The members on the multiple lift rigging assembly shall be set from the bottom up.

5. Controlled load lowering shall be used whenever the load is over the connectors.

CHAPTER 16
MISCELLANEOUS LIFTING DEVICES

This chapter provides requirements for the operation, inspection, testing, and maintenance of miscellaneous lifting devices including portable A frames (sometimes referred to as portable gantries), Truck mounted cranes with a capacity of 1 ton or less not covered in ASME B30.5 (.Mobile and Locomotive Cranes.) and self contained shop cranes as addressed by ASME PALD (.Portable Automotive Lifting Devices) (for latest ASME standards, see http://catalog.asme.org/home.cfm?Category=CS).

16.1 GENERAL 16-1
- 16.1.1 Operator Training/Qualifications 16-1
- 16.1.2 Rated-Load Markings, Safety markings and Operating Instructions 16-1
- 16.1.3 Modifications 16-1
- 16.1.4 Load Limits 16-2
- 16.1.5 Operating Controls 16-2
- 16.1.6 Load Hook 16-2
- 16.1.7 Wire Rope 16-2
- 16.1.8 Assembly 16-2

16.2 INSPECTIONS 16-5
- 16.2.1 General 16-5
- 16.2.2 Initial Inspection 16-5
- 16.2.3 Daily Preoperational Inspection 16-5
- 16.2.4 Periodic Inspection 16-5

16.3 TESTING 16-7
- 16.3.1 Operational Test 16-7
- 16.3.2 Rated Load Test 16-7

16.4 MAINTENANCE 16-8

16.5 OPERATION 16-9
- 16.5.1 Conduct of Operator 16-9

INTENTIONALLY BLANK

16.1 GENERAL

This chapter provides requirements for the operation, inspection, testing, and maintenance of miscellaneous lifting devices including portable A frames (sometimes referred to as portable gantries), Truck mounted cranes with a capacity of 1 ton or less not covered in ASME B30.5 (.Mobile and Locomotive Cranes.) and self contained shop cranes as addressed by ASME PALD (.Portable Automotive Lifting Devices.)

16.1.1 OPERATOR TRAINING/QUALIFICATION

a. Operators of self contained shop cranes and portable A frames shall be familiar with, understand and follow the operating instructions provided by the equipment manufacturer.

b. Operators of truck mounted cranes with capacities of 1 ton or less shall be trained as required in Chapter 6, "Personnel Qualifications and Training."

16.1.2 RATED-LOAD MARKINGS, SAFETY MARKINGS AND OPERATING INSTRUCTIONS

a. Safety markings shall be legible and conform to the ANSI Z535.

b. Markings, or decals, etc. must be provided and affixed by the use of durable materials in a location visible to the operator in order to provide a clear understanding of any special warning, capacity information, etc.

c. Shop cranes shall have the rated capacity for each specified boom and leg position marked in a prominent location on the equipment.

d. Small cranes 1 ton or less shall have a durable rating chart with legible letters and figures attached in a location accessible to the operator.

e. Each portable A frame shall have its rated capacity legibly marked on the structure on each side of the primary beam.

f. The manufacturers name, product serial number, and model number must be permanently and legibly marked on each portable A frame.

g. Operating instructions developed by the original manufacturer or supplier shall be maintained and readily available to the operator.

h. For small cranes 1 ton or less, operating instructions may be maintained on the vehicle on which the crane is installed.

i. Safety instructions for shop cranes and portable A frames shall include the following:

   1. Study, understand, and follow all instructions before operating this device.

   2. Do not exceed rated capacity.

   3. Use only on hard level surface.

4. Before moving, lower the load to the lowest possible point.

NOTE: For hoists used in conjunction with portable A frames, see chapter 8 for hoist requirements.

16.1.3 MODIFICATIONS

a. Miscellaneous lifting devices may be modified or re-rated provided that the modifications of supporting structures are analyzed thoroughly by a qualified engineer or by the manufacturer of the lifting device.

b. A re-rated lifting device, or one whose load-supporting components have been modified, shall be tested in accordance with Section 16.3, "Testing." The new rated capacity shall be displayed in accordance with Section 16.1.2, "Rated-Load Marking, Safety Markings and Operating Instructions."

16.1.4 LOAD LIMITS

Miscellaneous lifting devices shall not be loaded beyond its rated capacity, except for test purposes, as described in Section 16.3.

16.1.5 OPERATING CONTROLS

a. Operating controls shall be readily visible and accessible to the operator and shall not subject the operator to pinch points, sharp edges, or snagging hazards.

b. The release system for shop cranes shall require intentional positive action by the operator for release to prevent accidental lowering.

16.1.6 LOAD HOOK

a. Shop cranes shall be equipped with load hooks and/or chain capable of sustaining the proof load of the crane.

b. Latch-equipped hooks shall be used for all operations unless the application makes using the latch impractical, unnecessary, or unsafe. The absence of a hook-throat latch is not indiscriminately allowed.

16.1.7 WIRE ROPE

a. Wire rope, (single line capacity) used on small cranes 1 ton or less shall have a minimum design factor of 3.5:1, based upon breaking strength.

b. Small cranes 1 ton or less shall be equipped with properly sized wire rope sheaves in lieu of flat spools.

16.1.8 ASSEMBLY

a. Portable A frames shall only be assembled by qualified personnel. Manufacturer's instructions shall be adhered to regarding setup and assembly.

b. Portable A frame components from different manufacturers shall not be intermixed with components from other A frames regardless of similarities in manufacturers or rated capacities.

c. Only manufacture-approved methods attaching a hoist to the A frame structure such as approved beam clamp or trolley shall be used. Trolleys or beam clamp working load limits shall not exceed the capacity rating of the A frame and must be designed for the type frame flange (see figures 16-4 and 16-5). Hoists attached to the A frame must have a rated capacity equal to or less than all supporting components. (Down rating of hoist to A frame capacity is acceptable with administrative controls and markings in place)

d. Load-carrying trolleys must suit the shape and weight of the specific load. Trolley wheel design must be matched properly to the rail shape and size to ensure that trolleys do not slip off the track and drop the load

e. If a new or replacement trolley is installed on a monorail, the qualified person installing the trolley shall ensure by actual operational verification or measurement that the installed trolley stops on the system are compatible with the new trolley, thereby preventing trolley travel past a point where it could fall from the rail. On those systems where a series of monorails may be connected by a bridge or turntable, verification of functional trolley stops on all accessible rails must be established or administrative controls placed limiting access to a specific work area during the period the trolley is in service.

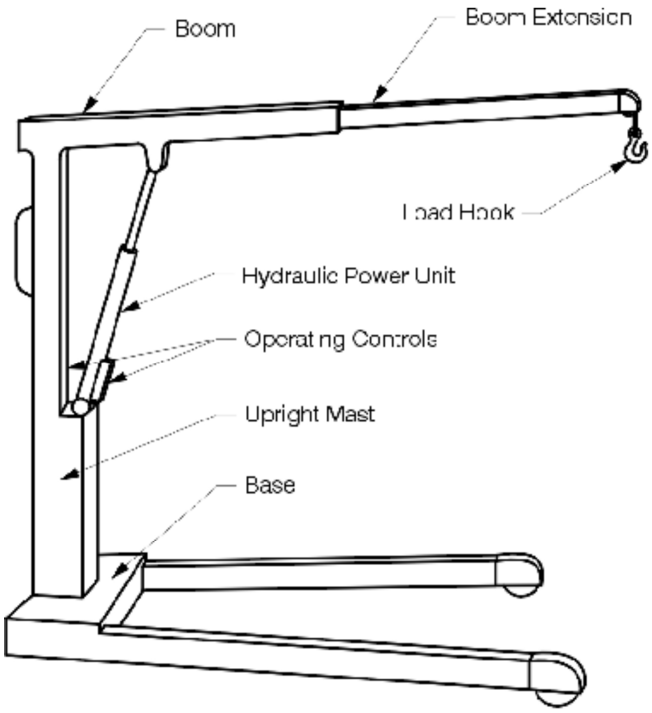

Reprinted from ASME PALD by permission of The American Society of Mechanical Engineers. All rights reserved.

Figure 16-1. Self Contained Shop Crane.

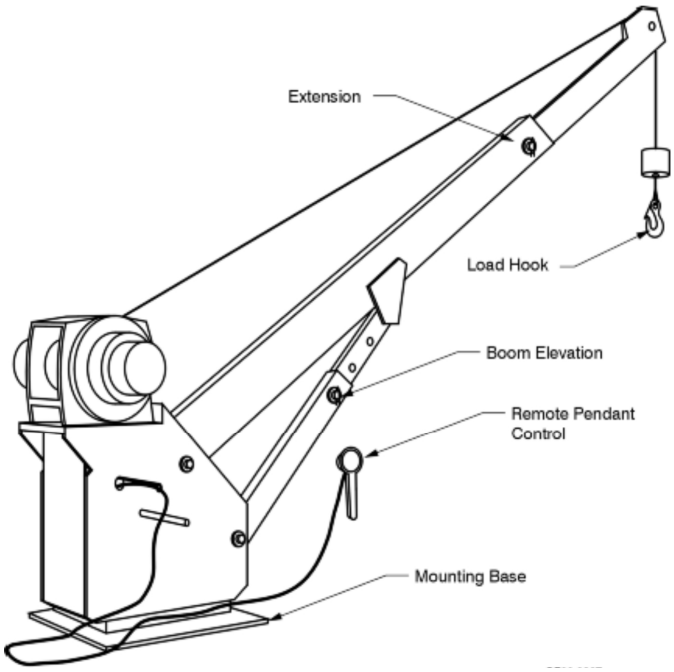

Figure 16-2. Truck Mounted Crane – Capacity 1 Ton or Less.

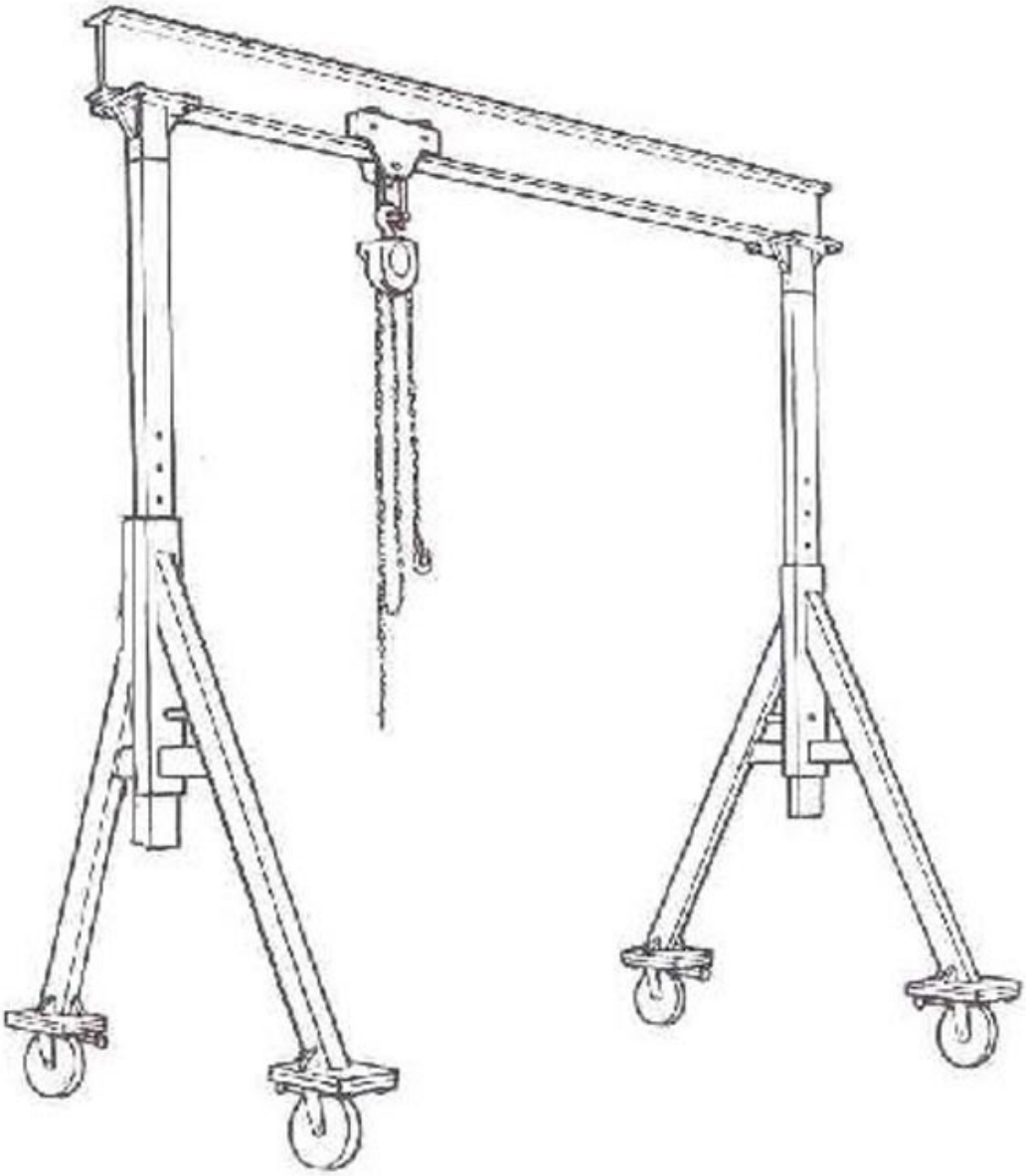

Figure 16-3 Portable A Frame

16.2 INSPECTIONS

16.2.1 GENERAL

Equipment shall operate with a smooth, regular motion without any hesitation, abnormal vibration, binding, or irregularity. There shall be no apparent damage, excessive wear, or deformation of any load-bearing part of the equipment. All safety devices, controls, and other operating parts of the equipment shall be checked during each inspection and shall be in good working order.

16.2.2 INITIAL INSPECTION

A qualified inspector shall inspect all miscellaneous lifting devices prior to initial use, after disassembly and reassembly, and after load testing. The inspection shall be performed in accordance with manufacturer's requirements. If manufacturer's instructions are not available, an engineering evaluation of the equipment shall be performed to establish necessary inspection procedures. Dated and signed inspection reports shall be kept on file and shall be readily available.

16.2.3 DAILY PREOPERATIONAL CHECK

a. Operators or other designated personnel shall visually inspect miscellaneous lifting equipment each day or prior to use if the equipment has not been in regular service (records are not required). The inspection shall include, but not be limited to inspecting the following:

    1. All control mechanisms for maladjustment interfering with proper operation.

    2. Hook and latch for deformation, cracks, and wear.
    3. Hydraulic systems for proper operation.

    4. Wire rope for kinking, crushing, birdcaging, and corrosion.

    5. Chain for bent links, stretched links, cracks, scores, abrasions or heat damage.

    6. All safety devices for malfunction

    7. Inspection items identified in manufacturer's operating instructions.

    8. Visually inspect for bent, broken, damaged, corroded, cracked or missing parts.

    9. Verify the hoist and all components installed on portable A frames do not exceed the rated capacity of the unit

    10. Verify required markings are installed and legible.

    11. Perform a function test of trolley and hoist installed on portable A frames to ensure proper operation.

b. Operators or other designated personnel shall examine deficiencies and determine whether they constitute a safety hazard.

16.2.4 PERIODIC INSPECTION

a. Miscellaneous lifting equipment shall be thoroughly inspected on a periodic basis in accordance with manufacturer's instructions. If manufacturer's instructions are not available, an engineering evaluation of the equipment shall be performed to establish the necessary inspection frequency and procedures.

b. The qualified inspector shall evaluate identified deficiencies and determine whether they constitute a hazard.

c. Dated and signed inspection records shall be kept on file and shall be readily available. An external coded mark on the lifting device indicating the completion of the required inspection and the due date for the next inspection is also acceptable documentation.

d. The following is a list of items frequently included in manufacturer's inspection instructions. If manufacturer's instructions are unavailable, these inspection items shall be considered in the engineering evaluation used to establish inspection procedures.

    1. Inspecting for bent, broken, damaged, corroded, cracked or missing parts.

    2. Verifying required markings are

installed and legible.

3. Ensuring that each lifting device has its rated capacity legibly marked on the structure on each side of the primary beam.

4. Ensuring that the manufacturer's name and model number are permanently and legibly marked on each lifting device.

5. Ensuring trolley or beam clamp working load limits do not exceed the capacity rating of the A frame. Hoists attached to the A frame must have a rated capacity equal to or less than all supporting components and be inspected to requirements of chapter 8. (Down rating of hoist to A frame capacity is acceptable with administrative controls and markings in place).

6. Ensuring A frame components from different manufacturers are not inter-mixed or with components from other A frames regardless of similarities in manufacturers or rated capacities.

7. Validating the proper dimensional relationship between trolley wheels and rail when installed on portable A frames (Refer to Figures 16-4 and 16-5)

8. Observing trolley side plates for any bending or distortion

9. Checking for missing or loose bolts, nuts and retaining pins or retaining devices.

e. In the event any required information is missing or illegible, an attempt shall be made via engineering drawings, prints, evaluations, etc. to establish the lifting device's manufacturer, rated capacity and other pertinent data. If this attempt is unsuccessful, the lifting device shall be removed from service until engineering personnel have thoroughly evaluated the design and adequacy of the structure. Engineering calculations must support all conclusions. The lifting device shall be identified, load tested and marked accordingly.

16.3 TESTING

16.3.1 OPERATIONAL TEST

The load lifting and lowering mechanisms shall be tested during an initial test and after load testing.

16.3.2 RATED LOAD TEST

a. Prior to initial use, all new portable A frames and small cranes (1 ton or less) and those upon which load-sustaining parts have been modified, replaced, or repaired shall be load-tested by a qualified inspector or under the direction of that inspector.

b. A written report shall be furnished by the inspector showing test procedures and confirming the adequacy of repairs or alterations. Test reports shall be kept on file and shall be readily available to appointed personnel.

c. Test loads shall not be less than 100 percent or more than 125 percent of the rated capacity, unless otherwise recommended by the manufacturer or a qualified person.

d. Shop cranes built to design specifications are proof-tested by the manufacturer in accordance with ASME PALD, "Portable Automotive Lifting Devices," Part 12. After repair or modification, a qualified engineer shall determine if testing is required.

16.4 MAINTENANCE

16.4.1 MAINTENANCE PROGRAM

A preventive maintenance program based on the manufacturer's recommendations shall be established. Dated records shall be made available.

16.4.2 REPLACEMENT PARTS

Replacement parts shall be at least equal to the original manufacturer's specifications.

16.5 OPERATIONS

16.5.1 CONDUCT OF OPERATOR

a. Before operating, the operator shall have demonstrated an understanding of the lifting device's operating safety instructions and the ability to safely operate the device.

b. The operator shall not:

1. Engage in any practice that will divert their attention while operating miscellaneous lifting devices.

2. Operate the lifting device beyond its rated capacity (except for rated load tests).

3. Operate miscellaneous lifting devices when physically or mentally unfit.

c. The operator shall:

1. Before moving the load, lower the load to the lowest possible point.

2. Only operate shop cranes on hard, level surfaces capable of sustaining the load.

3. Ensure the load does not drop suddenly or swing during transportation.

4. Whenever there is doubt as to safety, consult with the responsible management before operating miscellaneous lifting devices.

5. If adjustment or repairs are necessary, or any other defects are known, report the potential problem promptly to responsible management.

6. Ensure inspections are current and required markings are clearly labeled on the A frame and all hoisting components.

7. Always push the portable A frames, not the load when movement of the A frame is required.

8. Ensure the load is not attached to the floor or any other component prior to hoisting. Remove all obstacles that impede lifting.

9. When moving a load, keep it as close to the floor as possible. Make sure that no part of the body is placed under the load at any time.

10. Not allow the load to swing or roll against support members.

11. Not adjust the height of portable A frames when the unit is under load.

12. Secure trolley and hoist on portable A frames in center of I beam before adjusting height.

d. If necessary to leave a shop crane or a portable A frame with a suspended load unattended, the immediate area (at least 30 inches) around the shop crane or portable A frame shall be posted or barricaded to restrict entry of unauthorized personnel.

Note: Set flange-to-flange distance between wheels equal to rail width plus 1/8".

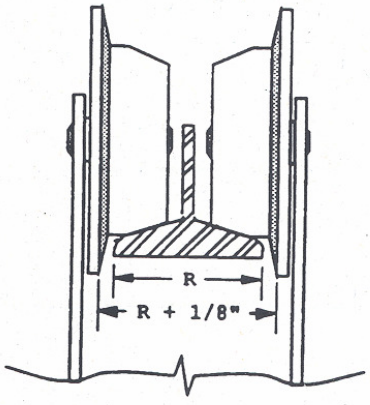

Figure 16-4. Trolley Flange Distance

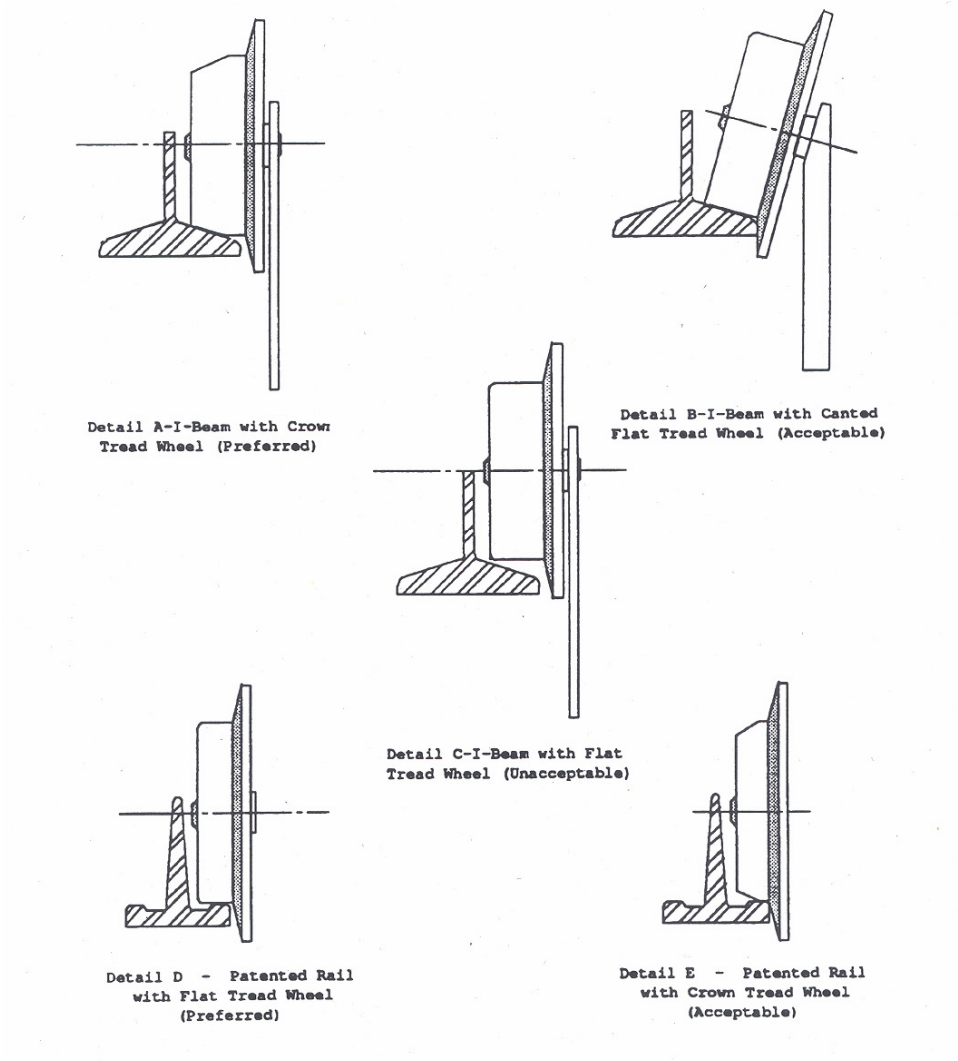

Figure 16-5 Trolley and Rail Compatibility

CHAPTER 17
REFERENCES

American Institute of Steel Construction

AISC Specifications for the design, fabrication, and erection of structural steel for buildings.

American Iron and Steel Institute

AISI Standards for Type-302 or Type-304 stainless steel.

American National Standards Institute and the American Society of Mechanical Engineers

ANSI A10.28, Work Platforms Suspended From Cranes or Derricks.

ANSI A10.18, Floor and Wall Openings, Railings and Toe Boards.

ASME B30.1, Jacks

ASME B30.2, Overhead and Gantry Cranes (Top-Running Bridge, Single or Multiple Girder, Top-Running Trolley Hoist).

ASME B30.5, Mobile and Locomotive Cranes.

ASME B30.6, Derricks.

ASME B30.7, Base-Mounted Drum Hoists.

ASME B30.9, Slings.

ASME B30.10, Hooks.

ASME B30.11, Monorail Systems and Underhung Cranes.

ASME B30.12, Handling Loads Suspended from Rotorcraft.

ASME B30.14, Side Boom Tractors.

ASME B30.16, Overhead Hoists (Underhung).

ASME B30.17, Overhead and Gantry Cranes (Top Running Bridge, Single Girder, Underhung Hoist).

ASME B30.20, Below-The-Hook Lifting Devices.

ASME B30.21, Manually Lever Operated Hoists.

ASME B30.22, Articulating Boom Cranes.

ASME B30.23, Personnel Lifting Systems.

ASME B30.26, Rigging Hardware

ASME BTH-1, Design of Below-the-Hook Lifting Devices

ANSI/ITSDF B56.1, Safety Standard for Powered Industrial Trucks – Low Lift and High Lift Trucks.

ANSI/ITSDF B56.5, Guided Industrial Vehicles.

ANSI/ITSDF B56.6, Rough Terrain Fork Lift Trucks.

ASME B56.7, Industrial Crane Trucks. Special Notice 6-88.

ASME B56.11.4, Forks and Fork Carriers for Powered Industrial Fork Lift Trucks, Hook Type.

ASME PALD, Portable Automotive Lifting Devices.

ANSI/ASTM Specification A391, Specification for Alloy Steel Chain.

ANSI/ASTM Specification E-165, Standard Practice for Liquid Penetrant Inspection Method.

ANSI/ASTM Specification E-709, Standard Practice for Magnetic Particle Examination.

ANSI/AWS D14.1, Specification for Welding of Industrial and Mill Cranes and Other Material Handling Equipment.

ASME HST-1M, Performance Standard for Electric Chain Hoists.

ASME HST-2M, Performance Standard for Hand Chain Manually Operated Chain Hoists.

ANSI/ASME HST-3M, Performance Standard for Manually Lever Operated Chain Hoists.

ANSI/ASME HST-4M, Performance Standard for Electric Wire Rope Hoists.

ANSI/ASME HST-5M, Performance Standard for Air Chain Hoists.

ANSI/ASME HST-6M, Performance Standard for Air Wire Rope Hoists.

ANSI MH 27.1, Specifications for Underhung Cranes and Monorail Systems.

ANSI N14.6, Standard for Special Lifting Devices for shipping Containers Weighing 10,000 Pounds (4500 kg) or More for Nuclear Materials.

ASME NQA-1, Quality Assurance Program Requirements for Nuclear Facilities.

ASME Cranes for Nuclear Facilities:

ASME NUM-1, Rules for Construction of Cranes, Monorails, and Hoists (With Bridge or Trolley or Hoist of the Underhung Type).

ASME NOG-1, Rule for Construction of Overhead and Gantry Cranes (Toprunning Bridge, Multiple Girder).

American Society for Nondestructive Testing

Recommended Practice No. ASNT-TC-1A.

American Welding Society

ANSI/AWS D1.1 Structural Welding Code – Steel.

Crane Manufacturers' Association of America

CMAA No. 70, Specification for Electric Overhead Traveling Cranes.

CMAA No. 74, Specification for Top Running and Under Running, Single Girder, Electric Overhead Traveling Cranes.

Department of Energy

DOE 440.1A, Worker Protection Management for Federal and Contractor Employees.

DOE 440.1-6, Suspect Counterfeit Items Guide.

Department of Labor

29 CFR 1910, Occupational Safety and Health Standards for General Industry.

29 CFR 1926, Occupational Safety and Health Regulations for Construction.

Department of Transportation

49 CFR 391.41, physical Qualification for Drivers.

National Fire Protection Association

ANSI/NFPA 505, Powered Industrial Trucks, Type Designation and Areas of Use.

NFPA 70, National Electrical Code.

Power Crane and Shovel Association

PCSA-4, Mobile Power Crane and Excavator Standards and Hydraulic Crane Standards.

Society of Automotive Engineers

SAE J376-85, Load-Indicating Devices in Lifting Crane Service.

Code.SAE J765, Crane Load Stability Test

SAE J874, Center of Gravity Test Code.

SAE J987, Crane Structure, Method of test.

Underwriters' Laboratories

UL 558, Internal-Combustion-Engine-Powered Industrial Trucks.

UL 583, Electric-Battery-Powered Industrial Trucks.

APPENDIX A
PROCUREMENT GUIDELINES

This appendix provides reference guidance in preparing purchase requisitions for hoisting and rigging materials and equipment. Nationally recognized standards and specifications are referenced for listed items. However, caution should be used prior to procurement of special items in order to verify appropriate specification or standard reference and requirements. Some specific requirements listed in this appendix are more restrictive than consensus standard requirements, but are recommended to ensure materials of adequate quality and workmanship are provided.

Quality receipt inspections should be provided for all received materials in order to verify compliance of all requirements stated on the purchase order.

This appendix primarily contains procurement criteria for off-the-shelf type items. If the information provided in this appendix is used in the development of specifications for purchase of cranes or other special handling equipment, the appropriate engineering group should be consulted.

Since this appendix contains only a partial listing of commonly used rigging hardware, the requisitioner shall review applicable standards or specifications and identify requirements to which the manufacturer shall adhere.

More specific information or requirements may be obtained by consulting the applicable section of this standard or an equipment manufacturer.

The manufacturer shall provide requested documentation as appropriate (e.g., rated load certification, proof-load test certification, material certification). Proof load test certification is essential for items to be used for critical lifts. The documentation shall be signed by the manufacturer's authorized representative.

1. MANUAL, ELECTRIC AND AIR OPERATED HOISTS A-1

2. MANUALLY OPERATED LEVER HOISTS A-3

3. SHOP/FLOOR CRANES A-4

4. BELOW THE HOOK STRUCTURAL AND MECHANICAL LIFTING DEVICES A-5
   4.1.1 General Construction A-5

5. WIRE ROPE A-6

6. CHAIN SLINGS A-7

7. SYNTHETIC WEB SLINGS A-8

8. SYNTHETIC ROUNDSLINGS A-9

9. WIRE ROPE SLINGS A-10

10. WIRE ROPE CLIPS (Clamps) A-11

11. EYE BOLTS A-12

12. HOOKS A-13

13. SWIVEL HOIST RINGS A-14

14. RINGS AND LINKS A-15

15. SHACKLES A-16

16. TURNBUCKLES A-17

EXHIBIT 1 – Purchase Requisition Example A-18

1. MANUAL, ELECTRIC AND AIR OPERATED HOISTS

1.1 GENERAL

a. Manual, electric and air operated hoists shall meet or exceed the requirements of ASME/ANSI B30.16.

b. To the extent that the desired configuration and capacity of electric or air operated hoist is available with a Nationally Recognized Testing Laboratory's listing, it should be specified to have such a listing. If not, the procurement procedures for such hoists should be coordinated with the site's authority having jurisdiction responsible for interpretation and enforcement of applicable codes.

c. For hoists designated a "Safety Class" or "Safety Significant" per applicable DOE nuclear safety rules or Orders, application of ASME NUM-1 requirements should be considered during procurement.

d. The rated load shall be marked on the hoist or load block.

e. The hoist shall be marked with identification as follows:

1. Hand Chain Operated

   i. Name of manufacturer
   ii. Manufacturer's model or serial number

2. Electric-Powered Hoist

   i. Name of manufacturer
   ii. Manufacturer's model or serial number
   iii. Voltage of AC or DC power supply and phase and frequency of AC power supply
   iv. Circuit ampacity
   v. Warning labels per ANSI Z535.4.

3. Air Powered Hoist

   i. Name of manufacturer
   ii. Manufacturer's model and serial number
   iii. Rated air pressure

e. All manual, electric, or air operated hoists shall have affixed to the hoist or load block a label or labels displaying precautionary information concerning operating procedures.

f. Load sprockets shall have teeth or pockets to allow engagement of the load chain, shall be guarded, and provisions shall be made to guard against jamming of the load chain within the hoist mechanism under normal operating conditions.

g. Manufacturer shall supply instruction manual for each hoist, the manual shall include the following information and instructions:

1. Installation
2. Operation
3. Inspection and Testing
4. Lubrication, maintenance, and repair
5. Wiring diagram (electric powered only; maybe supplied separately)

h. A load test certificate shall be provided by the manufacturer referencing the specific hoist, date of test, and amount of load applied.

1.2 LOAD CHAIN

a. Load chain may be either roller or welded link chain.

b. Load chain shall be pitched so as to pass over all load sprockets without binding.

c. Load chain shall be proof tested by the chain or hoist manufacturer with a load test of 150 percent of the rated load divided by the number of chain parts supporting the load.

d. A load test certificate shall be provided by the manufacturer or supplier referencing the specific hoist identification number, date of test and amount of load applied.

1.3 HOIST HOOKS

If hooks are of the swiveling type, they should rotate freely. Hooks shall be equipped with latches unless the application makes the use of the latch impractical. When required, a latch shall be provided to bridge the throat opening of the hook and retain, under slack conditions such items as, but not limited to slings, chains, etc. Refer to ASME/ANSI B 30.10.

1.4 LOAD BLOCKS

a. On hand chain operated hoists, a means shall be provided to guard against load chain jamming in the load block under normal operating conditions.

b. On electric- or air-powered hoists, load blocks shall be of the enclosed type, and means shall be provided to guard against rope or load chain jamming in the load block under normal operating conditions.

1.5 HOIST BRAKES

a. Hand chain operated hoist(s) shall be so designed that, when the actuating force is removed, it will automatically stop and hold any test load up to 125 percent of the rated load.

b. Electric-powered hoist, under normal operating conditions with rated load and test conditions with test loads up to 125 percent of rated load, the braking system shall perform the following functions:

   1. Stop and hold the load hook when controls are released;

   2. Limit the speed of load during lowering, with or without power, to a maximum speed of 120 percent of rated lowering speed for the load being handled;

   3. Stop and hold the load hook in the event of a complete power failure.

c. The braking system shall have thermal capacity for the frequency of operation required by the service.

d. The braking system shall have provisions for adjustments where necessary to compensate for wear.

e. Air-powered hoist, under normal operating conditions with rated load and test conditions with test loads up to 125 percent of rated load, the braking system shall perform the following functions:

   1. Stop and hold the load hook when controls are released;

   2. Prevent an uncontrolled lowering of the load in the event of a loss of air pressure;

   3. The braking system shall have thermal capacity for the frequency of operation required by the service;

   4. The braking system shall have provision for adjustments where necessary to compensate for wear.

2. MANUALLY OPERATED LEVER HOISTS

2.1 GENERAL

a. Manually operated lever hoists shall:

1. Meet or exceed the requirements of ASME/ANSI B30.21.

2. Have the rated load marked on the hoist or load block.

3. Be tested by the manufacturer with a test load of at least 125 percent of the rated load.

4. Have identifications for controls to indicate function or direction of motion.

5. Bbe marked with identification as follows:

   i. Name of manufacturer

   ii. Manufacturer's model or serial number

6. Have affixed to the hoist or load block in a readable position, a label or labels displaying precautionary information concerning operating procedures.

b. Load sprockets shall have pockets or teeth to allow engagement of the load chain, shall be guarded, and provisions shall be made to guard against jamming of the load chain with the host mechanism under normal operating conditions.

2.2 LOAD CHAIN

a. Load chain may be either roller or welded link type and shall be pitched so as to pass over all sprockets without binding.

b. Load chain shall be proof tested by the chain or hoist manufacturer with a load test of 150 percent of the hoist rated load divided by the number of chain parts supporting the load.

c. If a load is supported by more than one part of load chain, the tension on the parts shall be equalized.

2.3 LOAD BLOCKS

Load blocks shall have means to guard against load chain jamming in the load block under normal operating conditions.

2.4 LOAD CONTROLLING MECHANISM

a. Shall be equipped with a load controlling mechanism, which shall perform the following functions under normal operating conditions with test loads up to 125 percent of the rated load.

1. Stop and hold the load when the lever force is removed and the lever stroke completed.

2. Provide for incidental movement of the load when lifting or lowering.

3. Friction brake shall have provision for adjustment where necessary to compensate for wear.

b. Manufacturer shall supply instruction manual for each hoist, the manual shall include the following information and instructions:

1. Operation
2. Inspection and Testing
3. Lubrication, maintenance, and repair

3. SHOP/FLOOR CRANES

a. Shop/floor cranes shall meet or exceed the requirements of ASME PALD.

b. Operating controls shall be designed in such a manner that they are readily visible and accessible to the operator and so that the operator will not be subjected to pinch points, sharp edges, or snagging hazards. The operation of controls should be clear to the operator either by position, function, labeling or combination thereof.

c. The release system shall require intentional positive action by the operator for release to prevent accidental lowering.

d. Shop/floor cranes shall have a positive means to prevent the load from being lowered or raised beyond the design limit of travel.

e. Shop/floor cranes not equipped with internal load limit devices shall be capable of performing a proof test of 150 percent of the rated capacity.

f. Shop cranes equipped with internal load limiting devices shall, when the load limiting device is deactivated, be capable of performing a proof test of 125 percent of rated capacity.

g. Because of the potential hazards associated with the misuse of equipment of this type, no alterations shall be made to the product.

h. Shop/floor cranes shall be provided with a load hook and/or chain at the end of the boom extension that has a capacity capable of sustaining the proof load of the unit. The load hooks shall be provided with a latching mechanism.

i. Shop/floor cranes shall have required product warnings and markings.

4. BELOW THE HOOK STRUCTURAL AND MECHANICAL LIFTING DEVICES

4.1 GENERAL

a. The design shall conform to requirements of ASME B30.20 and ASME BTH-1.

NOTE: Special lifting devices for shipping containers weighing 10,000 lbs or more that are used for radioactive materials are governed by ANSI N14.6 (Standard for Shipping Containers Weighing 10,000 Pounds or More for Nuclear Materials).

b. A load test, not to exceed 125 percent of the rated load unless otherwise recommended by a manufacturer shall be provided. Rated load should not be more than 80 percent of the maximum load sustained during the test.

c. A load test certificate indicating the date of load test, amount of load applied, and confirmation of lifter load rating shall be supplied.

d. Welding shall be in accordance with ANSI/AWS D14.1.

e. Guards for exposed moving parts such as, but not limited to gearing, projecting shafts, and chain drives that constitute a hazard under normal operating conditions should be guarded.

f. Electrical equipment and wiring shall comply with Article 610 of ANSI/NFPA 70.

4.2 MARKINGS

a. All new structural and mechanical lifting devices shall be marked with, but not limited to, the following information:

1. Manufacturer's name and address
2. Serial number
3. Lifter weight, if over 100 lb (45 kg)
4. Cold current (amps) (when applicable)
5. Rated voltage (when applicable)
6. Rated load (as described in section 14.2.2.a)
7. ASME BTH-1 Design Category
8. ASME BTH-1 Service Class

b.. If the lifting device is made up of several lifters, each detachable from the group, these lifters shall also be marked with their individual rated loads.

5. WIRE ROPE

a. Wire rope shall meet or exceed the requirements of Federal Specification, RR-W-410E for wire rope, Mil Specification MIL-DTL-83420 for air craft cable and MILW-83140 for non-rotating stainless steel wire rope.

b. Wire rope shall be made in the United States by a member of the Wire Rope Technical Board[1] (except stainless steel, and unless recommended otherwise by a crane or hoist manufacturer). Stainless steel wire rope shall be made in the United States and shall be 302 or 304 grade stainless steel unless otherwise recommended by a crane or hoist manufacturer.

c. Wire rope shall have documentation from the manufacturer traceable to the material furnished and signed by the manufacturer's authorized representative. Documentation should reference as a minimum the purchase order number, the diameter, number of strands, core, lay, grade, manufacturer's lot/run number, material number and the nominal breaking strength of a sample.

d. Shall be shipped lubricated and with a protective covering (i.e., plastic or cardboard).

[1]

American Wire Rope, Inc.	St. Joseph, MO
Bridon American Corp.	Exeter, PA
Continental Cable Co.	Hinsdale, NH
Loos and Co., Inc.	Pomfret, CO
Wire Rope Corp. of America	St. Joseph, MO
Wire Rope Works, Inc.	Williamsport, PA

Note: This list is up-to-date as of the date of publication. Further information is available from the WRTB at (703)299-8550 or at wrtb@usa.net.

6. CHAIN SLINGS

a. Chain slings shall meet or exceed requirements of ASME/ANSI B30.9 and 29 CFR 1910.184.

b. Alloy steel chain slings shall have permanently affixed durable identification stating size, manufacturer's grade, rated load and angle upon which the rating is based, reach, number of legs, and sling manufacturer.

c. Hooks, rings, oblong links, pear-shaped links, welded or mechanical coupling links or other attachments shall have a rated load of at least equal to that of alloy steel chain with which they are used.

d. All welded components in the sling assembly shall be proof tested as components or as part of the sling assembly.

e. Hooks attached to chain slings shall meet the requirements of ASME/ANSI B30.10.

f. The welded components of all new slings shall be proof tested by the component or sling manufacturer to 200 percent of the rated load.

g. The proof load for multiple leg slings shall be applied to the individual legs and shall be 200 percent of the rated load of a single leg sling.

h. A certificate of proof test shall be provided by the manufacturer or supplier referencing the specific sling identification number, date of test, and amount of load applied. (Employer shall retain a certificate of the proof test and shall make it available for examination.)

7. SYNTHETIC WEB SLINGS

a. Synthetic slings shall meet or exceed the requirements of 29 CFR 1910.184 and ASME/ANSI B30.9.

b. Synthetic web slings shall be manufactured from webbing specifically constructed for overhead lifting.

c. Synthetic sling webbing shall have the following characteristics:

   1. Sufficient certified tensile strength to meet the sling manufacturer's requirements;

   2. Uniform thickness and width;

   3. Full woven width, including selvage edges;

   4. Webbing ends shall be sealed by heat, or other suitable means, to prevent raveling.

d. Thread used in the manufacture of synthetic web slings shall be of the same type yarn as the sling webbing.

e. Stitches shall be lock-stitched and preferably continuous. When not continuous, it shall be back stitched at the ends to prevent raveling.

f. The load carrying splice shall be sewn with a pattern of sufficient strength to justify the manufacturer's rated capacities.

g. Synthetic web slings shall have a minimum design factor of 5.

h. End fittings shall have sufficient strength to sustain twice the rated load of the sling without permanent deformation.

i. Each sling shall be permanently marked with the following:

   1. Manufacturer's name or trademark.

   2. Manufacturer's code or stock number.

   3. Type of synthetic web material.

   4. Rated loads for the type of hitches used.

   NOTE: Hand written, or ink embossed markings are not acceptable. Sling tags shall be indelibly marked and the lettering shall not wear off with use. The markings shall remain legible for the life of the sling.

j. The manufacturer shall have on file a written system of sling traceability as well as a quality control procedure. Traceability should be specific mill lots.

k. Fabric wear pads should be sewn into the bearing points of the sling eyes. Leather wear pads are not recommended.

l. Product warnings relative to the proper use, care, and maintenance shall accompany the shipment.

m. Single leg and endless synthetic web slings shall be proof tested to 200 percent of the rated load.

n. Multiple leg bridle slings shall have the proof load applied to the individual legs. The proof load shall be two times the vertical rated load of a single leg sling.

o. A load test certificate (LTC) shall be provided for each lot of slings supplied. The LTC shall reference as a minimum, the PO number, date of proof test, amount of load applied, sling capacity, and lot/run number. The LTC shall be signed by the manufacturers authorized representative.

   NOTE: Sling lengths shall be within a specified tolerance. Synthetic sling manufacturers' normal length is ±1 percent of the sling length. If closer tolerance is required, the purchaser should specifically request required tolerance on the purchase order.

8. SYNTHETIC ROUNDSLINGS

a. Slings should meet or exceed requirements of the Web Sling and Tiedown Association, Inc.

b. Synthetic roundslings including those incorporating welded fittings shall be proof tested to 200 percent of the vertical rated capacity.

c. A load test certificate (LTC) shall be provided for each lot of slings supplied. The LTC shall reference at a minimum, date of proof test, amount of load applied, sling capacity and lot/run number. The LTC shall be signed by the manufacturer's authorized representative.

d. The core(s) shall be formed from one or more ends of yarn, wound together on a plurality of turns. The core(s) should be uniformly wound to ensure even distribution of the load.

e. The cover(s) should be of the same fiber type as the load bearing core(s). When the cover is a different fiber type than the load bearing core, follow the manufacturer's recommendations for use.

f. The cover should be made from one length of material.

g. When the core and cover are of the same fiber, the thread should also be of that fiber type. When the core and cover are of different fiber types, the thread should be of the same fiber type as the core.

h. All stitching shall be lock-stitched type and should be continuous. When not continuous, they shall be back stitched or overstitched to prevent raveling.

i. The design factor for new synthetic roundslings and incorporating fittings shall be a minimum of five (5).

j. Each synthetic roundsling shall be permanently marked or labeled showing:

   1. Name or trademark of manufacturer.

   2. Manufacturer's code or stock number.

   3. Rated capacities for the three basic hitches. (vertical, choker, vertical basket)

   4. Core fiber type – if cover(s) is of a different fiber type, both fiber types shall be identified.

   5. Length (reach) – bearing point to bearing point.

k. Each manufacturer shall internally identify their product with name or trademark for traceability.

9. WIRE ROPE SLINGS

a. Wire rope slings shall meet or exceed the requirements of 29 CFR 1910.184 and ASME/ANSI B30.9.

b. Wire rope purchased to fabricate slings shall be made in the United States by a member of Wire Rope Technical Board (Except stainless steel). Stainless steel wire rope shall be made in the United States and shall be 302 or 304 grade stainless steel.

c. Wire rope shall meet the requirements of Federal Specification RR-W-410D or Military Specification MIL-W-83420.

d. Wire rope shall have documentation from the manufacturer traceable to the material furnished and signed by the manufacturer's authorized representative. Documentation shall reference as a minimum, the diameter, number of strands, core, lay, grade, manufacturing lot/run number, master reel number and nominal breaking strength of sample.

e. Shall be shipped lubricated and with a protective covering (i.e., plastic or cardboard).

f. Slings should be either 6 x 19 or 6 x 37 classification.

g. Slings should be made of wire rope produced from EXIPS (Extra Improved Plow Steel) with an IWRC (Independent Wire Rope Center). Consideration may be given to other grades or types of wire rope, dependent upon the type of expected service due to the type of load, hitch, or environment.

h. Shall have a minimum of 5 to 1 safety factor.

i. Shall be individually tagged with a durable tag, including the following information:

   1. Manufacturer's name or trademark WLL (Working Load Limit)

   2. Rated load for the type of hitch used and the angle upon which it is based

   3. Diameter or size

j. Shall have a load test certificate (LTC) for each lot of slings supplied. The LTC shall reference as a minimum, date of proof test, amount of load applied, sling capacity, lot/run number. The LTC shall be signed by the manufacturer's authorized representative.

k. Single leg hand tucked slings shall have a proof load equal to the rated load, but shall not exceed 125 percent of the rated load.

l. Mechanical spliced single leg and endless wire rope slings, and swaged socket or poured socket assemblies shall be load tested to 200 percent of the rated vertical load.

m. The proof load for multiple leg bridle slings shall be applied to the individual legs and shall be either 125 percent for hand tucked splice or 200 percent for mechanical splice, times the vertical rated load of a single leg sling of the same size, grade, and construction of rope. Any master link to which multiple leg slings are connected shall be proof loaded to 200 percent of the force applied by the combined legs.

n. Multiple leg bridle slings shall be tagged with a durable tag on the master link indicating the working load limit for the total combined legs for each individual sling in a vertical configuration. The purchase order number or serial number and the manufacturer's ID should be supplied.

10. WIRE ROPE CLIPS (Clamps)

a. Wire rope clips shall meet or exceed requirements of ASME B30.26.

b. Wire rope clip materials shall be of sufficient strength such that failure of the wire rope will occur before failure of the wire rope clip at the temperatures that the manufacturer has specified for use. Saddles shall be forged steel.

c. Wire rope clips shall have the manufacturer's name or trademark and the saddle size either forged or die-stamped into the saddle.

d. Wire rope clips should be shipped with application instructions and product warnings for each type or size clip.

11. EYE BOLTS

a. Eyebolts shall be fabricated to meet or exceed the requirements of ASME B30.26.

b. Eyebolts used for hoisting shall be fabricated from forged carbon or alloy steel and shall have sufficient ductility to permanently deform before losing the ability to support the load at temperatures at which the manufacturer has specified for use.

a. Eye bolts used for lifting service shall be marked with the manufacturer's name or trademark, size or rated load, and grade for alloy eyebolts.

b. The safe working load shall have a safety factor of 5.

12. HOOKS

a. Hooks used for lifting service shall meet or exceed the requirements of ANSI/ASME B30.10.

b. Manufacturer's identification shall be forged cast, or die stamped on a low stress non-wearing area of the hook.

c. When proof tests are used to verify manufacturing process, material, or configuration, hooks shall be able to withstand proof load application, without permanent deformation when a load is applied for a minimum of 15 seconds. Proof loads for hooks up to 50 ton capacity shall be 200 percent of the rated capacity.

d. Performance testing of hooks shall not be required, except where necessary to conform to requirements for the equipment of which they are a part of.

13. SWIVEL HOIST RINGS

a. Swivel hoist rings shall be fabricated to meet or exceed the required of ASME B30.26

b. Excluding bushings and bearings, swivel hoist rings shall have sufficient ductility to permanently deform before losing the ability to support the load at temperatures at which the manufacturer has specified for use.

c. Swivel hoist rings used for lifting service shall be marked with the manufacturer's name or trademark, rated load, and torque value.

d. The safe working load shall have a safety factor of 5.

14. LINKS AND RINGS

a. Links and rings shall be fabricated to meet or exceed the requirements of ASME B30.26.

b. Links and rings shall have sufficient ductility to permanently deform before losing the ability to support the load at the temperature that the manufacturer has specified for use.

c. The design factor for links and rings shall be a minimum of 5.

d. Prior to initial use, welded rings or links shall proof tested by the manufacturer. Proof testing is not required for forged rings or links.

e. Rings or links should be marked by the manufacturer with the manufacturer's name or trademark, size or rated load and grade (if needed to identify the rated load).

15. SHACKLES

a. Shackles shall be fabricated to meet or exceed the requirements of ASME B30.26.

b. Shackles shall have sufficient ductility to permanently deform before losing the ability to support the load at the temperature that the manufacturer has specified for use.

c. The design factor for shackles up to and including a 150 ton rated load shall be a minimum of 5. The design factor for shackles over 150 ton rated load shall be a minimum of 4.

d. Each shackle body shall be permanently and legible marked by the manufacturer. Raised or stamped letters on the side of the bow shall be used to show:
   1. Manufacturer's name and trademark.
   2. Size.
   3. Rated capacity.

e. Pins for shackles manufactured after May 20, 2006 shall be marked by the manufacturer with raised or stamped letters showing:
   1. Name or trademark of manufacturer
   2. Grade, material type or load rating

16. TURNBUCKLES

a. Turnbuckles shall be fabricated to meet or exceed the requirements of ASME B30.26.

b. Turnbuckles used for hoisting shall have sufficient ductility to permanently deform before losing the ability to support the load at temperatures at which the manufacturer has specified for use.

c. Turnbuckles used for lifting service shall be marked with the manufacturer's name or trademark, and size or rated load.

d. The design factor for turnbuckles shall be a minimum of 5.

PURCHASE REQUISITION **EXAMPLE ONLY**

Part I – Delivery, Receipt, and Handling (Complete for all Procurements

P.O. No. AB81111	P.O. Date	Requisition Date 12/18/96
Required Delivery 3/97	Deliver to (Name/Phone No., Bldg. Rm) Myra T. Fall / 1-1111 / Bldg 501	
Inspection (Check One) ☐ N/A ☒ RI ☐ PDT/RI ☐ RO		
End Use/Project No. Tank Removal	End User (Name/Phone) Myra T. Fall / 1-1111	
Packing, Shipping Level (Check One) ☐ N/A ☐ A ☐ B ☐ c ☐ D ☒ SS	Storage Level ☐ N/A ☐ A ☐ B ☒ c ☐ D	
PART II – Engineering/QA Control Data (Complete for all Procurements)		
Type Item ☐ N/A ☐ Engineered ☒ Commercial	Documents Deliverable ☐ None ☐ Comm. ☐ Eng ☒ Quality	Onsite Visit Required ☐ Yes ☒ No
PART III – Health and Safety Date (Complete for all Procurements)		
Functional Classification ☐ GS		
PART IV – Description (Complete for all Procurements)		
Procurement Type ☐ ASSI Item ☒ Approved Equal ☐ ADP ☐ Service ☐ ASSI Item ☐ Sole Source I ☐ Sole Source II		

Item No.	Quantity	Unit	Description (Salient Features)	Unit Price	Total Price
1	100	FT	Wire Rope, ½ inch Carbon Steel, 6 x 19 classification EIPS		
			(Extra Improved Rlow Steel), IWRC (Independent Wire		
			Rope Core), RRL (Right Regular Lay)	1.00	100.00
2	10	EA	Wire Rope Slings, ½ x 6 ft., made with carbon steel wire		
			Rope, minimum working load limit (4,000 lbs.)	10.00	100.00
3	10	EA	Synthetic Slings, 6 ft. length Flat Eye and Eye with a		
			Minimum rated vertical capacity of 6,000 lbs.	20.00	200.00
4	10	EA	Shackles, screw pin anchor, 25 Ton capacity	40.00	400.00
			SEE CONTINUATION SHEET FOR FUNCTIONAL REQUIREMENTS		
				TOTAL	

Suggested Supplier (Name/Phone No.) Marvin's Rigging Supply Anytown, USA 800-999-0000	Total Est Cost/Price $ 800.00 Budget Ceiling $1,000.00

APPROVALS:

APPROVER	PRINTED NAME	SIGNATURE	Social Security No.	Phone No.	Date
☒ Requestor	Freddie Hartzop		222-22-2222	1-1112	12/18/96
☐ Safety					
☒ Manager	Joe Boss		220-02-0000	1-1114	12/19/96
☐ Engineering					
☐ Other					

GA99 0027

Exhibit 1 – Purchase Requisition Example.

CONTINUATION – PURCHASE REQUISITION ..... EXAMPLE ONLY

ITEM NO.	QUANTITY	UNIT	DESCRIPTION (Salient Features)	UNIT PRICE	TOTAL PRICE
			FUNCTIONAL REQUIREMENTS FOR WIRE ROPE:		
			Carbon steel wire rope shall be made in the United States by a		
			member of the Wire Rope Technical Board.		
			Shall meet the requirements of RR-W-410D Federal Specification		
			for Wire Rope and Strand or MIL-W-83420 for aircraft cable.		
			Shall be shipped lubricated and with a protective covering, i.e.,		
			plastic or cardboard.		
			Wire Rope shall have Documentation from the manufacturer		
			traceable to the material furnished and signed by the manufacturer's		
			authorized representative. Documentation Shall reference as a		
			minimum, the PURCHASE ORDER number, state the diameter,		
			number of strands, core, lay, grade, manufacturing lot/run number		
			or master reel number and nominal breaking strength of sample.		
			ACCEPTANCE CRITERIA:		
			Quality receipt inspection shall verify that the manufacturer is a		
			member of the Wire Rope Technical Board (for carbon steel), verify		
			the diameter, lay, grade, core and documentation as complete and		
			meets or exceeds the requirements of this rope.		
			FUNCTIONAL REQUIREMENTS FOR WIRE ROPE SLINGS:		
			Wire rope purchased to fabricate slings shall be made in the United		
			States by a member of the Wire Rope Technical Board.		
			Shall meet the requirements of RR-W-410D Federal Specification		
			for Wire Rope and Strand or MIL-W-83420 for aircraft cable.		
			Wire Rope Shall have Documentation from the manufacturer		
			traceable to the material furnished and signed by the manufacturer's		
			authorized representative. Documentation Shall reference as a		
			minimum, the P.O. number, state the diameter, number of strands,		
			core, lay, grade, manufacturing lot/run number, master reel number,		
			and nominal breaking strength of sample.		
			Shall be shipped lubricated and with a protective covering, i.e.,		
			Plastic or cardboard.		
			Shall be mechanical flemish eye spliced.		
			Single leg slings Shall be either 6 x 19 or 6 x 37 classification.		

GA99 0026

Exhibit 1 – Purchase Requisition Example (continued)

CONCLUDING MATERIAL

Review Activity:		Preparing Activity:
DOE	**Field Offices**	DOE-HS-11
GC	ID	
HS	ORP	**Project Number:**
NE		SAFT-0112
NA		
NNSA		
CTA		
Site Offices		
ICP		
Livermore		
Pantex		
WIPP		