DISTRIBUTION NUMBER	DOCUMENT RELEASE AUTHORIZATION DISTRIBUTION KENNEDY SPACE CENTER, NASA	PAGE 2 OF 2
	DRA NO. EM-21CRS1- 1094	

QUANTITY	MAIL CODE	NAME	QUANTITY	MAIL CODE	NAME
DRA	721S-S135	CDC	DRA	YA-E8	L. Shultz
DRA	721S-S285	D. F. Baska	DRA	SA-C3	J. Dollberg
DRA	721S-S303	K. Hammons	DRA	UB-1	M. Carroll
1P	721S-S285	S. Rivera			
1P	721S-S300	J. Boland			
DRA	721S-S300	J. Hovis			
DRA	721S-S320	S. Mohammed			
DRA	721S-S335	P. High			
DRA	721S-S282	J. Degano			
1P	721S-S300	B. Donald			
1P	721S-S300	L. Logan			
1P	721S-S125	F. Beach			

REPRODUCTION AND DISTRIBUTION INSTRUCTIONS

Return Originals To CDC.

PCN	DOCUMENT RELEASE AUTHORIZATION KENNEDY SPACE CENTER, NASA	PAGE 1 OF 2
ESR M03596		REV/DATE
DIR DM03596LVL4	DRA NO. EM-21CRS1- 1094	SIGNATURE
EFF	TITLE SYSTEM ASSURANCE ANALYSIS OF THE 30 TON HIGHBAY CRANES LOCATED AT THE SPACE STATION PROCESSING FACILITY	
EQ. LOC. SSPF		VEN CODE
SDL		CONTRACT

DOCUMENTS

I#	PREF	DOCUMENT NUMBER	ISSUE	SIZE	SHTS	B/L NO.	SS	MODEL NUMBER	WUC
1	ANA	SAA21CRS1-001, (Cover page, page 1, 1a, pages 2 – 204)	A	A	206	580.01	S1	K61-2944	SIFCRAA000

TECHNICAL REMARKS

CCN: BQ3XHA01
DOCUMENTATION ONLY

APPROVALS

No CM needed P.H. (JK) 4/27/05

TECHNICAL CONTACT	MAIL CODE	DATE	R&QA	MAIL CODE	DATE
S. Rivera, 867-4966 S. Rivera	721S-S285 N250				
TECHNICAL J. Degano J.S. 4.8.05 Joseph H. Degano	721S-S282 D150	4-12-05	OTHER J. Dollberg John C Dollberg	SA-C3	4/22/05
SPACE AND WEIGHT			JOINT RELEASE		
PROCUREMENT PKG.			RELEASE D. F. Baska	721S-S285 N250	4-7-05

SAA21CRS1-001
Rev. A
MARCH 2005

SYSTEM ASSURANCE ANALYSIS

OF THE

30-TON HIGHBAY BRIDGE CRANES

LOCATED AT THE

SPACE STATION PROCESSING FACILITY (SSPF)

BASELINE NO. 580.01

PMN: K61-2944

WUC: SIFCRAA000

SS: S1

SYSTEM: CRITICAL

NOTICE - When Government drawings, specifications, or other data are used for any purpose other other than in connection with a definately related Government procurement operation, the United States Government thereby incurs no responsibility or obligation whatsoever; and the fact that the Government may have formulated, furnished, or in any way supplied the said drawings, specifications, or other data is not to be regarded by implication or otherwise as in any manner licensing the holder or any other person or corporation, or conveying any rights or permission to manufacture, use, or sell any patented invention that may be in any related thereto.

APPLICATION		PART NO.	MF	REVISIONS			
NEXT ASSY	USED ON			SYM	DESCRIPTION	DATE	APPROVAL
				A	Incorporated M03542 Terminal Block Installation, Incorporated EO1-SAA21CRS1-001, ESR's M03596,M03599 incorporated. Revised all pages. Added page 1a, change history.	3/18/05	S. Rivera A. Rivera

SUBMITTED: ORIGINAL SIGNED
J. Wyckoff, F194, MDSS-KSC

SUBMITTED: ORIGINAL SIGNED
B. Di Meo, F194, MDSS-KSC

CONCURRENCE: ORIGINAL SIGNED
J. Britton, F126. MDSS-KSC

CONCURRENCE: ORIGINAL SIGNED
M.J. Phillips, Manager,
SRM&Q Engineering Analysis
F194, MDSS-KSC

CONCURRENCE: ORIGINAL SIGNED
T.M. Smith, Director PED,
F100, MDSS-KSC

CONCURRENCE: ORIGINAL SIGNED
J. Joyner, RT-ENG

CONCURRENCE: ORIGINAL SIGNED
T. Steinrock, DF-FDD

CONCURRENCE: ORIGINAL SIGNED
E. Camacho, DF-ELD

CONCURRENCE: ORIGINAL SIGNED
M. Morales, DF-FDD

CONCURRENCE: ORIGINAL SIGNED
Chief, DF-FDD

BOEING®

UNLESS OTHERWISE SPECIFIED	ORIGINAL DATE	SYSTEM ASSURANCE ANALYSIS OF THE 30-TON HIGHBAY BRIDGE CRANES	JOHN F. KENNEDY
DIMENSIONS ARE IN INCHES	OF DRAWING 4 - 93		SPACE CENTER, NASA
TOLERANCES ON FRACTIONS DECIMALS ANGLES	DRAFTSMAN / CHECKER	LOCATED AT THE SPACE STATION PROCESSING FACILITY (SSPF)	KENNEDY SPACE CENTER
	TRACER / CHECKER		
	ENGINEER / ENGINEER	BASELINE NO. 580.01	FLORIDA
MATERIAL	SUBMITTED		
HEAT TREATMENT		SCALE / DWG SIZE	SAA21CRS1- 001
FINAL PROTECTIVE FINISH	APPROVED M. J. Phillips, MDSS	UNIT WT / A	SHEET 1 OF 204

CHANGE HISTORY

REV. A
March 2005

M03542 Installed Terminal Block for motor megger checks
M03596 Installed Alignment Braces to Feedrail Collector Shoes (Facility Modification)
M03599 Grounding of Feedrail Hanger Brackets (Facility Modification)
EO1-SAA21CSR1-001 Incorporated

TABLE OF CONTENTS

Sec/Par	Title	Page
I	**SUMMARY OF FINDINGS**	5
1.1	System Criticality	5
1.2	Mechanical Critical Items	5
1.3	Electrical Critical items	5
1.4	Critical Flex Hoses	5
1.5	Critical Orifices	5
1.6	Critical Filters	5
1.7	Criticality Category 1R Items	5
1.8	Hazards Identified	5
1.9	Critical Control/Monitor Functions	6
1.10	Sneak Circuits Identified	6
1.11	Areas of Concern and Recommendations	6
II	**SYSTEM SUMMARY**	7
2.1	System Baseline	7
2.2	Documentation List	7
2.3	System Description	8
2.3.1	Hoist System	8
2.3.2	Trolley System	8
2.3.3	Bridge System	9
2.3.4	Crane Control	9
III	**DEFINITIONS AND GROUND RULES**	10
3.1	Definitions	10
3.2	Ground Rules	12
IV	**CRITICALITY ASSESSMENT'**	13
4.1	Hardware/Reliability Block Diagram	13
4.2	Criticality Assessment Worksheets	13
V	**FAILURE MODES AND EFFECTS ANALYSIS AND CIL**	16
5.1	Mechanical FMEA Worksheets And Block Diagrams	16
5.2	Electrical FMEA Worksheets And Block Diagrams	25
5.2.1	Crane "Black Box Control" Analysis	157
5.3	Flexhose FMEA Worksheets	181
5.4	Orifice FMEA Worksheets	181
5.5	Filter FMEA Worksheets	181
5.6	Critical Items List	181
5.7	Critical Flexhoses	181
5.8	Critical Orifices	181

Sec/Par	Title	Page
5.9	Critical Filters	181
5.10	Critical Category 1R Items	181
VI	**HAZARD ANALYSIS .....**	184
6.1	Objective.....	184
6.2	Results	184
VII	**CONTROL LOGIC ANALYSIS .....**	203
VIII	**EMERGENCY SAFING ANALYSIS .....**	203
IX	**SNEAK CIRCUIT ANALYSIS .....**	203
X	**END-TO-END ANALYSIS .....**	204
XI	**AREAS OF CONCERN AND RECOMMENDATIONS .....**	204
11.1	Areas Of Concern	204
11.2	Recommendations	204

LIST OF FIGURES

Figure	Title	Page
1	Crane Physical Layout (Typical)	18
2	Hoist Drive Physical Layout	19
3	Trolley Drive Physical Layout	20

LIST OF ABBREVIATIONS AND ACRONYMS

AMPS	Amperes
ASSY.	Assembly
CA	Catastrophic
CAT.	Category
CIL	Critical Items List
CDR	Critical Design Review
CN	Controlled
CR	Critical
CRIT.	Criticality
CSFP	Critical Single Failure Point
FM	Failure Mode
FMEA	Failure Modes and Effects Analysis
FPM	Feet Per Minute
GSE	Ground Support Equipment
HP	Horse Power
KSC	Kennedy Space Center
MDSSC	McDonnell Douglas Space Systems Company
NASA	National Aeronautics and Space Administration
NHB	NASA Handbook
NSTS	National Space Transportation System
OMI	Operations and Maintenance Instruction
OMRSD	Operations and Maintenance Requirements and Specifications Document
PCN	Program Control Number
PMN	Program Model Number
QTY.	Quantity
REF.	Reference
REV.	Revision
RPM	Revolutions Per Minute
SAA	System Assurance Analysis
SHA	System Hazard Analysis
SMS	System Mechanical Schematic
S/S	Station Set
SSPF	Space Station Processing Facility
STS	Space Transportation System
W.O.	Work Order
WUC	Work Unit Code

SECTION I

SUMMARY OF FINDINGS

1.1 SYSTEM CRITICALITY

The two 30-Ton Bridge Cranes located in the high bay at the Space Station Processing Facility (SSPF) are assessed as critical due to their direct interface with flight hardware. A failure could cause loss of life and/or flight hardware. No critical single failure points were identified during this analysis. Although no critical single failure points were identified, this system is being considered a criticality category 1 system. This is due to the uniqueness (one-of-a-kind) of the Space Station Modules to be lifted. Loss of a Space Station Module could cause a loss of mission.

1.2 MECHANICAL CRITICAL ITEMS

There were no mechanical critical items identified in the critical output functions identified in section IV for this equipment. See section 5.1 for additional information.

1.3 ELECTRICAL CRITICAL ITEMS

There were no electrical critical items identified in the critical output functions identified in section IV for this equipment. See section 5.2 for additional information.

1.4 CRITICAL FLEX HOSES

There are no critical flex hoses associated with this equipment.

1.5 CRITICAL ORIFICES

There are no critical orifices associated with this equipment.

1.6 CRITICAL FILTERS

There are no critical filters associated with this equipment.

1.7 CRITICALITY CATEGORY 1R ITEMS

There were eight (8) criticality category 1R items identified in the critical output functions identified in section IV for this equipment. See section 5.1, 5.2 and 5.10 for additional information.

1.8 HAZARDS IDENTIFIED

There were no formal hazards identified during this analysis.

1.9 CRITICAL CONTROL/MONITOR FUNCTIONS

There are no TCMS control/monitor functions associated with this system.

1.10 SNEAK CIRCUITS IDENTIFIED

There was no Sneak Circuit Analysis performed for this system.

1.11 AREAS OF CONCERN AND RECOMMENDATIONS

There were no areas of concern or recommendations to be considered for this system, reference section XI for further information.

SECTION II

SYSTEM SUMMARY

2.1 SYSTEM BASELINE

This system is base lined for SSPF by 79K09579, "KSC STS/Cargo Identification List for Facilities, Systems and Equipment by Baseline Number", dated 07/26/90. The OMD Baseline is 580.01

2.2 DOCUMENTATION LIST

The document 82K03735, "System Documentation List", establishes the system baseline configuration. The following documents were used in completing this analysis

Document/ Drawing No.	Rev.	Title
NASA-STD-8719.9		NASA Standard for Lifting Devices and Equipment.
KNPR 8715.3		KSC Safety Practices Procedural Requirements
D-2168-AO1		SSPF Highbay 30-TON General Arrangement Drawing
D-2168-MO1		Hoist Assembly & Details
D-21 G8-M02		Hoist Drum Details & Gear Reducer
D-2168-M03		Bridge Drive Assembly & Details
D-2168-M04		Trolley Drive Assembly & Details
SSP 30309		Product Assurance Requirements
101A16061 Sheets 1-15		Harnischfeger, Crane Control Electrical Schematic Hoist "A"

2.3 SYSTEM DESCRIPTION

The 30-Ton Bridge Cranes located in the highbay at the Space Station Processing Facility each consists of three major subsystems, a 30-ton hoist, a trolley system and bridge system which allow lifting and positioning of flight hardware during processing operations.

2.3.1 HOIST SYSTEM

The hoist system consists of dual DC powered variable speed motors, two gear reducers and two electro-mechanical shoe type brakes. The motor speeds are selected using a joystick in the cab. The operator has the ability to use a cab mounted switch to go from high speed (0 to 13.5 FPM) to a more precise low speed (0 to 3.0 FPM). This switch labeled HIGH-LOW affects the range of operation of the joystick. The hoist is also capable of "Load Float", the ability of the motor to hold the load in one place using motor torque instead of hoist brakes. The motors are rated at 30 HP/1150 RPM and are capable of hook travel speeds from 0 to 13.5 feet per minute (FPM), and 0 to 3 FPM in low speed mode. The hoist motors are interconnected using a shaft, this shaft helps balance the force exerted on each side of the wire rope drum.

The hoist system is equipped with two (2) shoe type brakes, each of which is capable of stopping and holding 150% of the full rated load on its own. These brakes are disengaged by applying a current to the individual brake coils that creates a magnetic force and overcome brake spring force, thus releasing the brakes. To engage the brakes the current is withdrawn and the brake spring force causes the brake shoes to contact the brake wheel and stop hoist motion. The hoist system is also equipped with two upper and one lower limit switches which prevent hoist system over travel. The hoist system is also equipped with over speed protection which will terminate hoist power and set the hoist brakes in the event of an over speed condition.

ESR M03542 installs and replaces the motor terminal blocks with non-fused disconnect switches to be used to disconnect the wiring for megger testing. These are installed on the hoist, trolley and bridge motors.

ESR M03596 provides for the alignment of the feed rails which provide crane power. There are gusset plates mounted on the power feed shoe support on the horizontal support. This is a Facility Modification.

ESR M03599 provides for the grounding of the crane feed rail hanger brackets. This is a Facility Modification.

EO1-SAA21CRS1-001 provides for the installation of the Crane Remote Emergency Stop at the Electrical Service Pedestals.

2.3.2 TROLLEY SYSTEM

The trolley system is equipped with a DC powered variable speed motor, a gear reducer and a single electro-mechanical shoe type brake. The trolley motor is rated at 1.5 HP at 1150 RPM and is capable of moving the trolley at speeds from 0-30 FPM in high speed and 0 to 3.0 FPM in low speed. The operator has the ability to use a cab mounted switch to go from high speed (0 to 30.0 FPM) to a more precise low speed (0 to 3.0 FPM). This switch, labeled HIGH-LOW, affects the range of operation of the joystick.

The trolley system is equipped with a single electro-mechanical shoe type brake which will stop and hold the trolley. The trolley system is also equipped with slow down and over travel limit switches. The over travel limit switch will terminate control power to the trolley in the effected direction and set trolley brake should the limits be passed. The trolley also includes a slow down limit switch, which at a given location will force the trolley to a slow speed, this acts as a safety device. The over speed protection will terminate all control power if the set limit is passed.

2.3.3 BRIDGE SYSTEM

The bridge system consists of two variable speed main motors, two gear reducers, and two electro-mechanical shoe type brakes. The bridge motors are rated at 2.0 HP at 850 RPM. The motors are capable of moving the bridge at variable speeds up to 30.0 FPM. The operator has the ability to use a cab mounted switch to go from high speed (0 to 30.0 FPM) to a more precise low speed (0 to 3.0 FPM). This switch, labeled HIGH-LOW, affects the range of operation of the joystick.

The bridge is equipped with two electro-mechanical shoe type brakes which are used for stopping and holding the bridge. The bridge also is equipped with limit switches that protect against bridge over travel, collision and over speed. If the over travel limits are passed the limit switch opens and terminates control power to the bridge in its current direction and sets the bridge brake. The bridge over speed protection will terminate all control power if set limits are passed. The bridge system is also equipped with a slow down limit switch. This limit switch provides protection against hitting the end stops by requiring the bridge to slow to micro speed a set distance from the stops.

2.3.4 CRANE CONTROL

Each 30-Ton Bridge crane is controlled from a cab mounted under the bridge, containing all required operator controls. The crane is also equipped with remote E-Stop stations Located throughout the highbay which enable personnel, other than the operator, to halt all crane motion on both cranes by removing power.

SECTION III

DEFINITIONS AND GROUND RULES

3.1 DEFINITIONS

Definitions necessary for the clarification of criticality categories, hazard analysis, and "time to effect" are listed below.

a. Criticality Categories:

CRITICALITY	POTENTIAL EFFECT OF FAILURE
1	A single failure which could result in loss of life or flight hardware.
1R	Two redundant hardware items, which if both failed, could result in loss of life or vehicle (or loss of a safety or hazard monitoring system associated with flight crew emergency egress).
1S	A single failure in a safety or hazard monitoring system that could cause the system to fail to detect. combat, or operate when needed during the existence of a hazardous condition and could result in loss of life or flight hardware.
2	A single failure which could result in loss. (damage) of a flight hardware system.
3	All other effects (i.e., delay, no effect).

Note: For this analysis, the term "vehicle" includes payloads.

b. Hazard Report Closure Classification

(1) Eliminated - A hazard that has been eliminated by completely removing the hazard causal factors or by deleting the hazardous operation (e.g., modifying the system/GSE by ESR implementation).

(2) Controlled - The likelihood of occurrence has been reduces to an acceptable level by implementing the appropriate Hazard Reduction Precedence Sequence (HRPS) to comply with program requirements (e.g., OMI controls, physical controls).

(3) Accepted Risk - A hazard that has not been completely eliminated or controlled, and the residual risk has been accepted by project/program management on the basis of risk acceptance rationale. These risks are considered a part of doing business and necessary to continue the program phase.

c. Hazard Levels - There are three levels for which a hazard can be identified. Hazard level will be categorized as follows:

(1) Catastrophic (CA) - Hazard could result in a mishap causing fatal injury to personnel, and/or loss of one or more major elements of the flight vehicle or ground facility (applicable for accepted risk hazards only).

(2) Critical (CR) - Hazard could result in serious injury to personnel and/or damage to flight and ground equipment which could cause mission abort or a significant program delay (applicable for accepted risk hazards only).

(3) Controlled (CN) - Has been counteracted by appropriate design, safety devices, alarm/caution and warning devices, or special automatic/manual procedures (applicable for controlled hazards only).

d. Hazard Report Status

(1) Closed - Corrective action/evaluation has been completed. OMRSD requirements have been identified and closed loop control is established . Governing procedural controls (e.g., OMIs, TPSs, etc...) are in place. In case of hazards which document design deficiencies, the modification has been completed, the modified system configuration has been verified, and the certification has been documented.

(2) Open - Corrective measure/procedural hazard controls are not in place, or evaluation is pending.

e. Likelihood of Occurrence - The probability the hazard will occur, considering the in-place hazard controls. Likelihood of occurrence will be categorized as follows:

Ao: Unlikely - Extremely remote possibility that hazard will occur in the life of the program; strong controls are in place.

Bo: Likely - Could happen in the life of the program, but not expected; controls have minor limitations or uncertainties.

Co: Probable - Expected to happen in the life of the program; controls have significant limitations of uncertainties. Hazard reports with this likelihood of occurrence are considered unacceptable risk.

f. Time to Effect - The analysis shall determine the time for the failure effect to occur, which will be specified as follows:

Immediate	less than 1 second
Seconds	31 to 60 seconds
Minutes	60 seconds to 60 minutes
Hours	60 minutes to 24 hours
Days	24 hours to process completion

The description which indicates the shortest credible time or time range available to correct the situation before the effect is manifested shall be identified.

3.2 GROUND RULES

This analysis has been developed in accordance with KHB 1710.2, "Kennedy Space Center Safety Practices Handbook".

a. Passive components will not be analyzed in the FMEA but will be considered in the Hazard Analysis.

b. Noncompliance to the requirements of NASA-STD-8719.9 NASA Standard for Lifting Devices and Equipment shall be identified in the FMEA.

c. Failure in system setup (e.g., Manual operated devices erroneously left open) will not be identified as critical items.

d. The worst-case effect of a failed component will be assumed.

e. For this analysis, it is assumed all control software is functioning as designed.

SECTION IV
CRITICALITY ASSESSMENT

4.1 HARDWARE/RELIABILITY BLOCK DIAGRAM

This system input and output functions are identified from the following Hardware/Reliability Block Diagram.

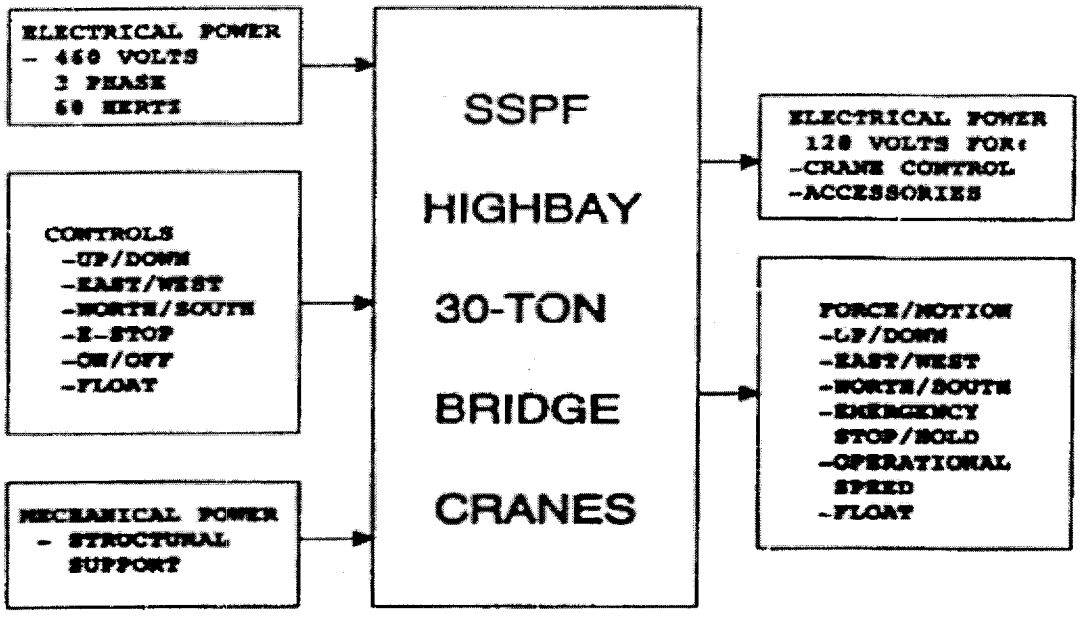

4.2 CRITICALITY ASSESMENT WORKSHEETS

This system input and output functions are assessed on the following Criticality Assessment Summary sheet.

The Criticality Assessment Worksheets are performed to determine whether the GSE or facility system is Critical or Non-critical in terms of reliability impact. If loss or improper performance of any one of the system's functions, without regard to redundancy, could result in loss of life or loss of flight hardware or damage to flight hardware, the total system is assessed as Critical. If loss or improper performance of all of the system's functions could not result in any of the aforementioned effects, the system will be considered Non-critical.

SYSTEM CRITICALITY ASSESSMENT WORKSHEET

SHEET 1 of 2

PROGRAM MODEL NO.:	SYSTEM/SUBSYSTEM:	STATION SET (NAME/NUMBER)	W.O.:	SCHEMATIC DWG NO.
K61-2944	SSPF 30-TON BRIDGE CRANES	SSPF	NONE	D-2168 M01 - MO
BASELINE:	LOCATION:	PREPARED BY:		DATZ
580.01	SPACE STATION PROCESSING FACILITY	J. WYKOFF, MDSS	M00000	FEBRUARY 1993

INPUT/ OUTPUT	FUNCTION	TIME PERIOD	EFFECT OF LOSS/FAILURE	CRIT CAT	NOTE
ELECTRICAL POWER - 460 VOLTS - 3 PHASE - 60 HERTZ	SUPPLIES POWER TO OPERATE MOTORS AND BRAKES FOR HOIST, TROLLEY AND BRIDGE SYSTEM	PRELAUNCH PAYLOAD - PROCESSING	ALL CRANE MOTION WOULD STOP, ALL CRANE SYSTEM BRAKES WOULD ENGAGE AND HOLD LOAD. DELAY IN PROCESSING OPERATIONS	NC	
CONTROLS					
-UP/Down (HOIST)	OPERATES HOIST IN SPECIFIED DIRECTION.	PRELAUNCH PAYLOAD-PROCESSING	UNABLE TO RAISE/LOWER LOAD AS REQUIRED.	C	
-NORTH/ SOUTH (TROLLEY)	OPERATES TROLLEY IN SPECIFIED DIRECTION.	PRELAUNCH PAYLOAD PROCESSING	UNABLE TO TRAVERSE NORTH/SOUTH AS REQUIRED	C	
-EAST/WEST (BRIDGE)	OPERATES BRIDGE IN SPECIFIED DIRECTION.	PRELAUNCH PAYLOAD PROCESSING	UNABLE TO TRAVERSE EAST/WEST AS REQUIRED.	C	

SYSTEM CRITICALITY ASSESSMENT WORKSHEET

SHEET 2 of 2

PROGRAM MODEL NO.:	SYSTEM/SUBSYSTEM:	STATION SET (NAME/NUMBER)	W.O.:	SCHEMATIC DWG NO.
K61-2944	SSPF 30-TON BRIDGE CRANES	SSPF	NONE	D-2168 M01 - MO
BASELINE:	LOCATION:	PREPARED BY:		DATZ
580.01	SPACE STATION PROCESSING FACILITY	J. WYKOFF, MDSS	M00000	FEBRUARY 1993

INPUT/ OUTPUT	FUNCTION	TIME PERIOD	EFFECT OF LOSS/FAILURE	CRIT CAT	NOTE
E-STOP (HOIST, TROLLEY AND BRIDGE)	PROVIDES EMERGENCY STOP CAPABILITES	PRELAUNCH PAYLOAD PROCESSING	UNABLE TO STOP CRANE MOTION IN THE EVENT OF AN EMERGENCY	C	REQUIRES A MINIMUM OF THREE FAILURES
STRUCTURAL SUPPORT	SUPPORTS 30 -TON BRIDGE CRANE	PRELAUNCH PAYLOAD PROCESSING	FAILURE OF THE CRANE STRUCTURAL SUPPORT COULD CAUSE LOSS OF LIFE AND/OR FLIGHT HARDWARE	C	FMEA NOT REQUIRED PER KHB 1710.2
OUTPUT					
HOIST MOTION (UP/DOWN)	RAISE/LOWER AND POSITION LOAD	PRELAUNCH PAYLOAD PROCESSING	A CATASTROPHIC FAILURE OF THE HOIST SYSTEM COULD CAUSE LOSS OF LIFE AND/OR FLIGHT HARDWARE	C	REQUIRES MULTIPLE FAILURES
TROLLEY MOTION	POSITION LOAD AS REQUIRED	PRELAUNCH PAYLOAD PROCESSING	A CATASTROPHIC FAILURE OF THE HOIST SYSTEM COULD CAUSE LOSS OF LIFE AND/OR FLIGHT HARDWARE	C	REQUIRES MULTIPLE FAILURES
BRIDGE MOTION	POSITION LOAD AS REQUIRED	PRELAUNCH PAYLOAD PROCESSING	A CATASTROPHIC FAILURE OF THE HOIST SYSTEM COULD CAUSE LOSS OF LIFE AND/OR FLIGHT HARDWARE	C	REQUIRES MULTIPLE FAILURES

SECTION V

FAILURE MODES AND EFFECTS ANALYSIS AND CIL

5.1 MECHANICAL FMEA WORKSHEETS AND BLOCK DIAGRAMS

The mechanical components of the critical output functions identified in section IV for this equipment were identified from the documents and diagrams referenced in the Documentation List and are analyzed on the following FMEA worksheets. A passive items list precedes the FMEA Worksheets and is contained on the following page.

FAILURE MODES AND EFFECTS ANALYSIS

FOR THE

30-TON SSPF HIGH BAY CRANES

The following components were considered passive in the analysis for this section

Nomenclature	Find Number
Bridge Beams	None
Bridge Wheels	None
Trolley Frame	None
Trolley Wheels	None
Hoist Rope Drum	None
Hoist Wire Rope	None
Hoist Hook	None
Hoist Lower Block Assy	None
Electrical Enclosures	None

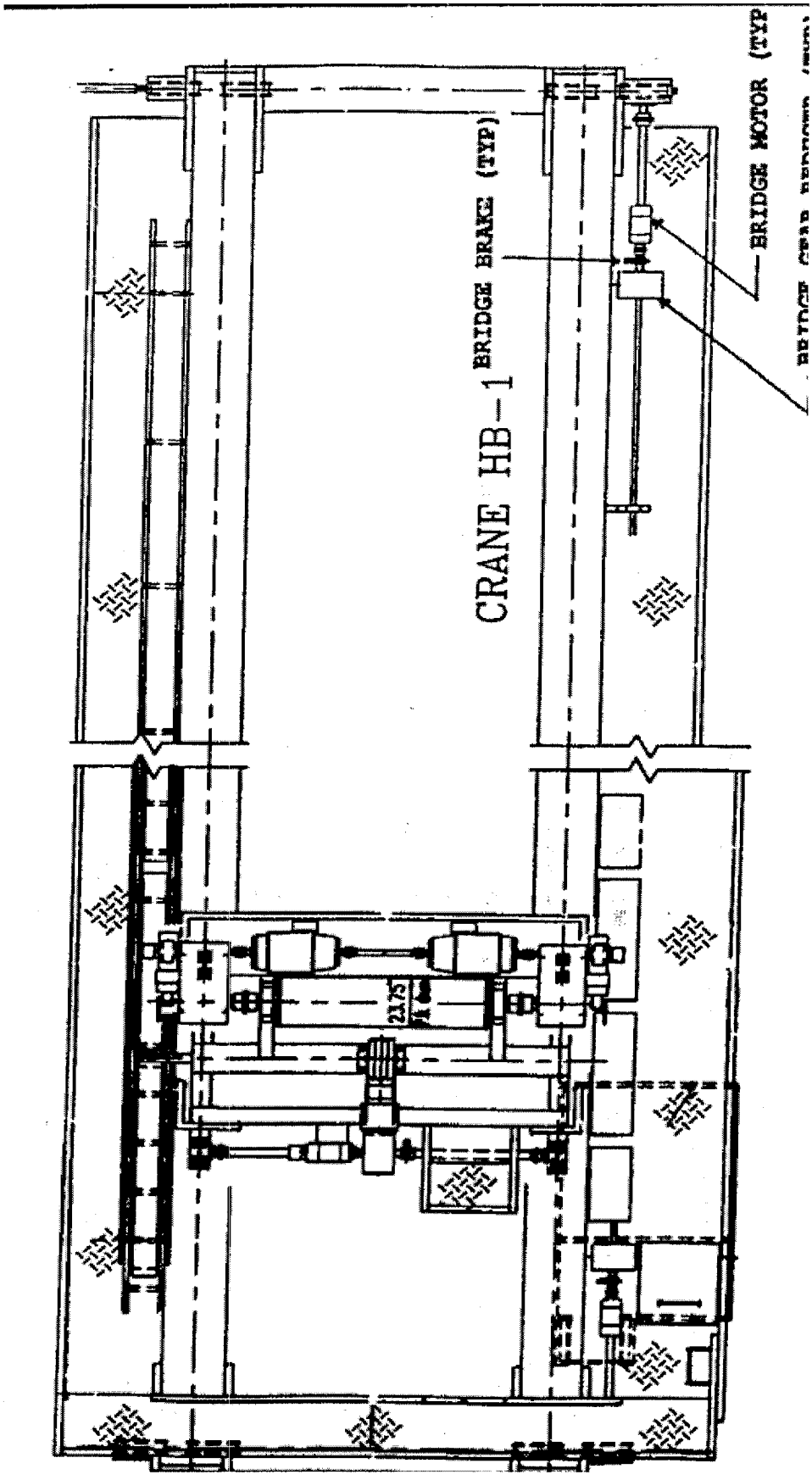

FIG. 1 CRANE PHYSICAL LAYOUT

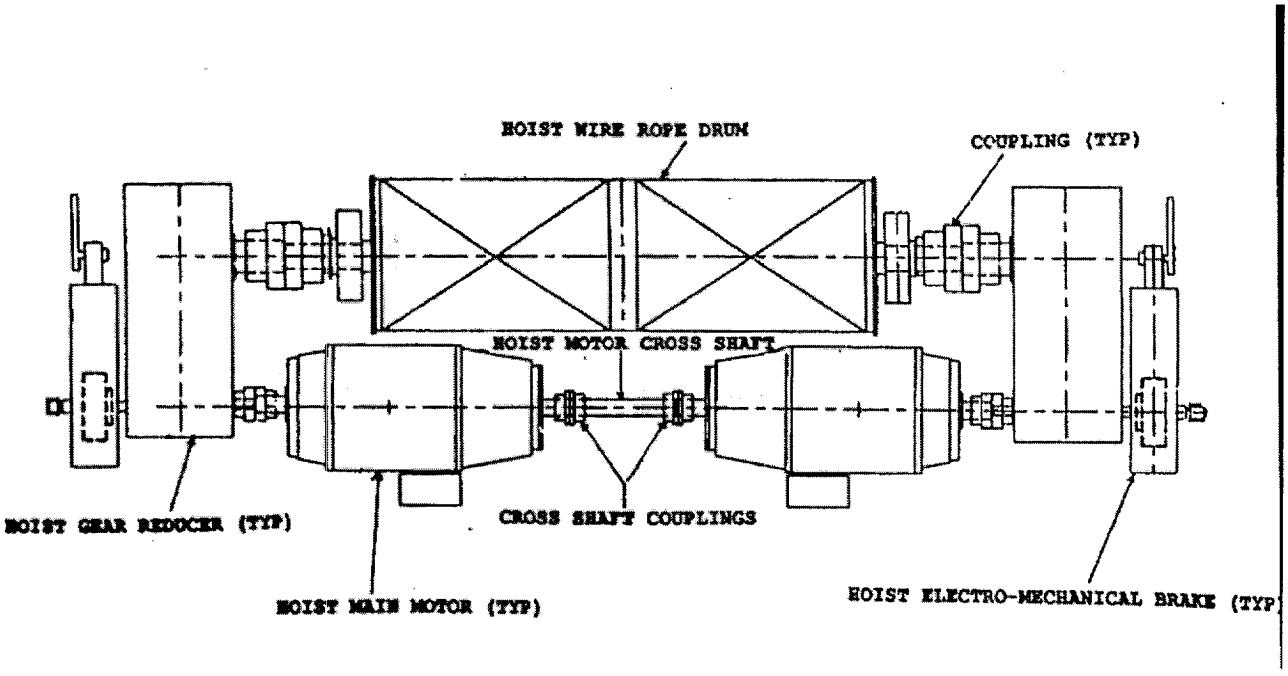

FIG. 2 HOIST DRIVE PHYSICAL LAYOUT

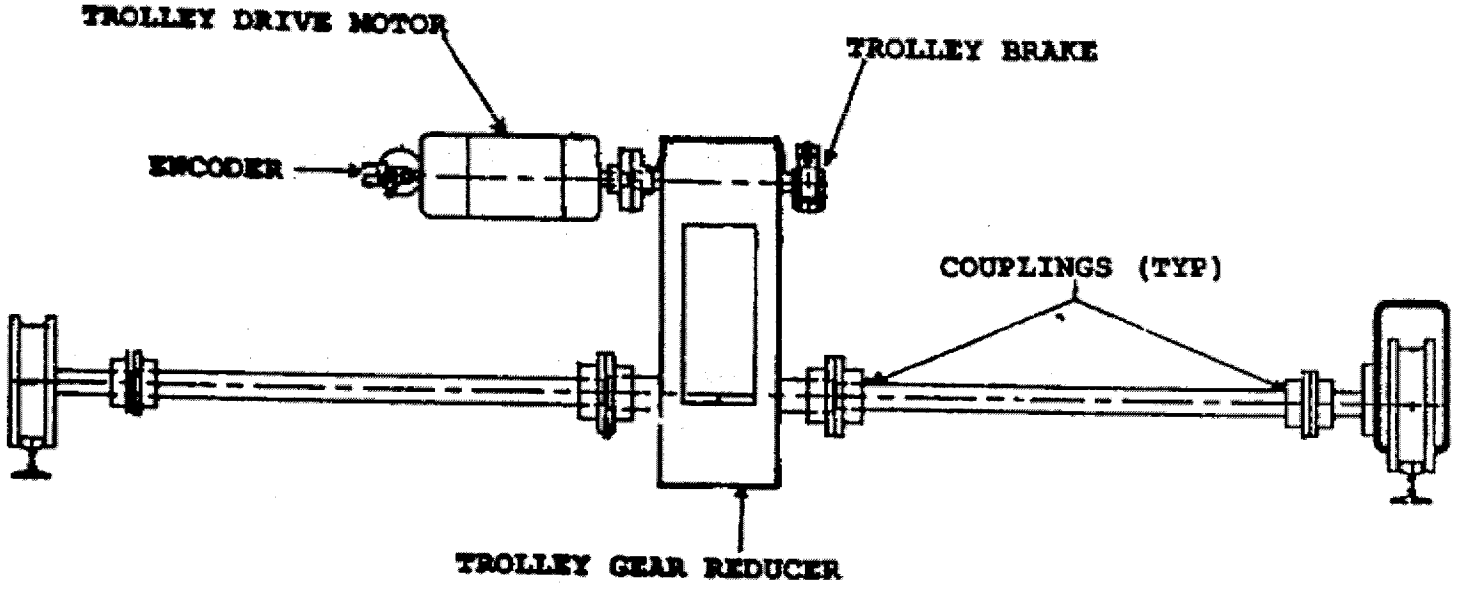

Fig. 3 TROLLEY DRIVE PHYSICAL LAYOUT

FAILURE MODES AND EFFECTS ANALYSIS (FMEA) WORKSHEET

SYSTEM: SSPF 30-TON BRIDGE CRANE **PROGRAM:** SPACE STATION **FACILITY/STATION SET:** SSPF

SUBSYSTEM: MECHANICAL **PAGE:** 1 **OF** 4 **DATE:** 2/12/93

DWG. NO.: D-2168-M01,D-2168-M03,D-2168-M04

PMN: K61-2944 **BASELINE:** 580.01 **PREARED BY:** J.C. WYCKOFF, MDSS-F194

FIND NO. PART NO.	PART NAME	PART FUNCTION	A. FAILURE MODE B. CAUSE C. FMN D. DETECTION METHOD E. CORRECTING ACTION F. TIME TO EFFECT G. TIMEFRAME	FAILURE EFFECT ON SYSTEM PERFORMANCE	FAILURE EFFECT ON VEHICLE SYSTEMS AND/OR PERSONNEL SAFETY	CRIT CAT
SDM 280 LH, RH	HOIST GEAR REDUCER (TWO UNITS PER CRANE, TWO CRANES)	PROVIDES MECHANICAL LINKAGE /ADVANTAGE BETWEEN THE HOIST MOTORS AND THE DRUM	A1. DISENGAGES B1. BROKEN TEETH C. FMN21CRS1-001.001 D. UNDETECTIBLE E. ELECTRIC BRAKE HOLDS LOAD F. IMMEDIATELY IMMEDIATELY A2. GEARS LOCK UP B2. LACK OF LUBRICATION, EXCESSIVE WEAR	NONE, THE FAILURE OF A SINGLE GEAR REDUCER WILL HAVE NO EFFECT. IF BOTH REDUCERS FAIL, LOAD WILLDROP. FAILS REDUNDANCY SCREEN B. HOIST SYSTEM INOPERATIVE POSSIBLE DAMAGE TO HOIST MOTORS IF OPERATOR ATTEMPS TO MOVE HOIST SYSTEM	DELAY FOR REPAIRS, SHOULD BOTH GEAR REDUCERS FAIL, LOAD WILL DROP. COULD CAUSE LOSS OF LIFE AND/OR FLIGHT HARDWARE.	1R 3
SBE-10 (2 UNITS)	ELECTRO-MECANICAL BRAKE, SHOE TYPE (TWO UNITS PER CRANE, TWO CRANES)	PROVIDES TORQUE FOR STOPPING AND HOLDING LOAD WHEN POWER IS REMOVED.	A1. FAILS TO ENGAGE B1. EXCESSIVE WEAR OF FRICTION MATERIAL C. FMN21CRS1-001.002 D. UNDETECTABLE E. SECOND BRAKE HOLDS LOAD F. IMMEDIATELY H. IMMEDAIATLY A2. FAILS TO DISENGAGE B2. INTERNAL PARTS FAILURE	NONE, SECOND ELECTRO-MECHANICAL BRAKE WILL STOP AND HOLD LOAD. SHOULD BOTH ELECTRO-MECHANICAL BRAKES FAIL, LOAD WILL DROP. FAILS REDUNDANCY SCREEN B HOIST SYSTEM INOPERATIVE CONTROLS WILL SHUT DOWN CRANE WITH "BRAKE SET" ERROR	DELAY FOR REPAIRS	1R 3

FAILURE MODES AND EFFECTS ANALYSIS (FMEA) WORKSHEET

SYSTEM: SSPF 30-TON BRIDGE CRANE **PROGRAM:** SPACE STATION **FACILITY/STATION SET:** SSPF

SUBSYSTEM: MECHANICAL **PAGE:** 2 **OF** 4 **DATE:** 2/12/93

DWG. NO.: D-2168-M01,D-2168-M03,D-2168-M04

PMN: K61-2944 **BASELINE:** 580.01 **PREARED BY:** J.C. WYCKOFF, MDSS-F194

FIND NO. PART NO.	PART NAME	PART FUNCTION	A. FAILURE MODE B. CAUSE C. FMN D. DETECTION METHOD E. CORRECTING ACTION F. TIME TO EFFECT G. TIMEFRAME	FAILURE EFFECT ON SYSTEM PERFORMANCE	FAILURE EFFECT ON VEHICLE SYSTEMS AND/OR PERSONNEL SAFETY	CRIT CAT
TYPE T20 FALK	COUPLING (TWO UNITS PER CRANE, TWO CRANES)	PROVIDES MECHANICAL LINKAGE BETWEEN HOIST GEAR REDUCER AND WIRE ROPE DRUM	A1. FAILS STRUCTURALLY B1. OVER STRESS C. FMN21CRS1-001.003 D. UNDETECTABLE E. SECOND BRAKE HOLDS F. IMMEDIATELY G. IMMEDIATELY	HOIST SYSTEM WILL OPERATE ON ONE OF TWO MAIN MOTORS. IF BOTH FAIL, LOAD WILL DROP. COULD CAUSE LOSS OF LIFE AND/OR FLIGHT HARDWARE. FAILS REDUNDANCY SCREEN B	DELAY FOR REPAIRS, IF BOTH THE COUPLINGS FAIL, LOAD WILL DROP. COULD CAUSE LOSS OF LIFE AND/OR FLIGHT HARDWARE.	1R
TYPE T 20	COUPLING (TWO UNITS PER CRANE, TWO CRANES)	PROVIDES MECHANICAL LINKAGE BETWEEN HOIST GEAR REDUCER	A1. FAILS STRUCTURALLY B1. OVER STRESS	HOIST SYSTEM WILL OPERATE ON ONE OF TWO MOTORS. HOIST BRAKE IS DOWN STREAM OF COUPLINGS AND WILL STOP AND HOLD LOAD.	DELAY FOR REPAIRS	3
WALDRON 1 ½ WFR DODGE PARA-FLEX	COUPLING (TWO UNITS PER CRANE, TWO CRANES)	PROVIDES MECHANICAL LINKAGE BETWEEN HOIST MOTORS BY WAY OF MOTOR CROSS SHAFT.	A1. FAILS STRUCTURALLY B1. OVER STRESS	NO EFFECT ON NORMAL OPERATION	DELAY FOR REPAIRS	3
MODEL 91120 DORRIS REDUCER	TROLLEY GEAR REDUCER	TRANSMITS AND INCREASES ROTATIONAL FORCE FROM THE TROLLEY MOTOR TO THE TROLLEY DRIVE WHEELS.	A1. DISENGAGES B1. BROKEN TEETH	TROLLEY INOPERATIVE, LOSS OF TROLLEY BRAKING. TROLLEY MAY COAST A SHORT DISTANCE AFTER FAILURE.	DELAY FOR REPAIRS	3
			A2. FROZEN BEARINGS B2. LACK OF LUBRICATION	TROLLEY SYSTEM INOPERATIVE.	DELAY FOR REPAIRS	3

FAILURE MODES AND EFFECTS ANALYSIS (FMEA) WORKSHEET

SYSTEM: SSPF 30-TON BRIDGE CRANE **PROGRAM:** SPACE STATION **FACILITY/STATION SET:** SSPF

SUBSYSTEM: MECHANICAL **PAGE:** 3 OF 4 **DATE:** 2/12/93

DWG. NO.: D-2168-M01,D-2168-M03,D-2168-M04

PMN: K61-2944 **BASELINE:** 580.01 **PREARED BY:** J.C. WYCKOFF, MDSS-F194

FIND NO. PART NO.	PART NAME	PART FUNCTION	A.FAILURE MODE B.CAUSE C.FMN D.DETECTION METHOD E.CORRECTING ACTION F.TIME TO EFFECT G.TIMEFRAME	FAILURE EFFECT ON SYSTEM PERFORMANCE	FAILURE EFFECT ON VEHICLE SYSTEMS AND/OR PERSONNEL SAFETY	CRIT CAT
DS9516-460AA102AA015	ELECTRO-MECHANICAL SHOE TYPE BRAKE	PROVIDES STOPPING AND POSITION HOLDING ABILITY TO THE TROLLEY	A1. FAILS TO ENGAGE B1. EXCESSIVE WEAR OF FRICTION PLATES	LOSS OF TROLLEY BRAKING. CONTROLS BRING TROLLEY TO STOP BEFORE BRAKE IS SET..	DELAY FOR REPAIRS	3
			A2. FAILS TO DISENGAGE B2. INTERNAL PART FAILURE	TROLLEYBRAKE WILL REMAIN SET. TROLLEY INOPERATIVE	DELAY FOR REPAIR	3
WALDRON 2 1/2WFR (2 UNITS)	COUPLINGS	PROVIDES MECHANICAL LINKAGE BETWEEN TROLLEY GEAR REDUCER AND DRIVE WHEELS.	A1. FAILS STRUCTURALLY B1. OVERSTRESS	ONE TROLLEY DRIVE WHEEL INOPERATIVE. IF BOTH COUPLINGS FAIL, TROLLY INOPERATIVE.	DELAY FOR REPAIRS	3
WALDRON 2 WFR (2 UNITS)	COUPLINGS	PROVIDES MECHANICAL LINKAGE BETWEEN TROLLEY GEAR REDUCER AND DRIVE WHEELS.	A1. FAILS STRUCTURALLY B1. OVERSTRESS	ONE TROLLEY DRIVE WHEEL INOPERATIVE. IF BOTH COUPLINGS FAIL, TROLLY INOPERATIVE.	DELAY FOR REPAIRS	3
MODEL 91128 DORRIS REDUCER	BRIDGE GEAR REDUCERS (TWO UNITS PER CRANE, TWO CRANES)	TRANSFERS AND REDUCES ROTATIONAL POWER FROM THE BRIDGE DRIVE MOTOR TO THE BRIDGE DRIVE CROSS SHAFT AND FLOATING SHAFT.	A1. DISENGAGES B1. BROKEN TEETH	BRIDGE SYSTEM INOPERATIVE	DELAY FOR REPAIRS	3
			A2. FROZEN BEARINGS B2. LACK OF LUBRICATION	BRIDGE SYSTEM INOPERATIVE	DELAY FOR REPAIRS	3

FAILURE MODES AND EFFECTS ANALYSIS (FMEA) WORKSHEET

SYSTEM: SSPF 30-TON BRIDGE CRANE **PROGRAM:** SPACE STATION **FACILITY/STATION SET:** SSPF

SUBSYSTEM: MECHANICAL **PAGE:** 4 OF 4 **DATE:** 2/12/93

DWG. NO.: D-2168-M01,D-2168-M03,D-2168-M04

PMN: K61-2944 **BASELINE:** 580.01 **PREARED BY:** J.C. WYCKOFF, MDSS-F194

FIND NO. PART NO.	PART NAME	PART FUNCTION	A.FAILURE MODE B.CAUSE C.FMN D.DETECTION METHOD E.CORRECTING ACTION F.TIME TO EFFECT G.TIMEFRAME	FAILURE EFFECT ON SYSTEM PERFORMANCE	FAILURE EFFECT ON VEHICLE SYSTEMS AND/OR PERSONNEL SAFETY	CRIT CAT
460-1-60 GENERAL ELECTRIC	ELECTRO-MECHANICAL SHOE TYPE BRAKES (TWO UNITS PER CRANE, TWO CRANES)	PROVIDES STOPPING AND POSITION HOLDING ABILITY TO THE BRIDGE	A1. FAILS TO ENGAGE B1. EXCESSIVE WEAR	LOSS OF BRIDGE BRAKING. CONTROLS BRING BRIDGE TO STOP BEFORE BRAKE IS SET..	DELAY FOR REPAIR	3
TYPE T20 FALK (TWO UNITS)	COUPLINGS	PROVIDES MECHANICAL LINKAGE BETWEEN BRIDGE MOTOR AND BRIDGE GEAR REDUCER CASE	A1. FAILS STRUCTURALLY B1. OVERSTRESS	BRIDGE SYSTEM INOPERATIVE	DELAY FOR REPAIRS	3
WALDRON 2 ½ WFR (2 UNITS)	COUPLINGS	PROVIDES MECHANICAL LINKAGE BETWEEN BRIDGE GEAR REDUCER AND DRIVE WHEELS	A1. FAILS STRUCTURALLY B1. OVERSTRESS	ONE BRIDGE DRIVE WHEEL INOPERATIVE. IF BOTH COUPLINGS FAIL, BRIDGE INOPERATIVE.	DELAY FOR REPAIRS	3
WALDREN 2WFR (2 UNITS)	COUPLINGS	PROVIDES MECHANICAL LINKAGE BETWEEN BRIDGE GEAR REDUCER AND DRIVE WHEELS	A1. FAILS STRUCTURALLY B1. OVERSTRESS	ONE BRIDGE DRIVE WHEEL INOPERATIVE. IF BOTH COUPLINGS FAIL, BRIDGE INOPERATIVE	DELAY FOR REPAIRS	3
FALK T20 (2 UNITS)	COUPLINGS	PROVIDES MECHANICAL LINKAGE BETWEEN TROLLEY MOTOR AND GEAR REDUCER	A1. FAILS STRUCTURALLY B1. OVERSTRESS	TROLLEY SYSTEM INOPERATIVE.	DELAY FOR REPAIRS	3

5.2 ELECTRICAL FMEA WORKSHEETS AND BLOCK DIAGRAMS

The electrical components of the critical output functions identified in section IV for this equipment were identified from the documents and diagrams referenced in the Documentation List and are analyzed on the following FMEA worksheets.

FAILURE MODES AND EFFECTS ANALYSIS (FMEA) WORKSHEET

System: 30 TON BRIDGE CRANE **Program:** SPACE STATION **Facility/Station Set:** SSPF

Subsystem: ELECTRICAL CONTROLS, HOIST

Drawing No.: 101A16061 **Sheet No.:** 1 TO 20 **Page:** 26 of 67 **Date:** 18 March, 2005

PMN: K61-2944 **Baseline:** 580.01 **Prepared by:** W. DiMeo, Boeing

FIND NO. PART NO.	PART NAME	PART FUNCTION	A. FAILURE MODE B. CAUSE C. FMN D. DETECTION METHOD E. CORRECTING ACTION F. TIME TO EFFECT G. TIMEFRAME	FAILURE EFFECT ON SYSTEM PERFORMANCE	FAILURE EFFECT ON FLIGHT HARDWARE AND/OR PERSONNEL SAFETY	CRIT CAT
N1	N.O. CONTACTS (3) SETS IN SERIES WITH A.C. INPUT LINES TO HOIST A CONTROLLER	WHEN CLOSED PROVIDE PATH FOR POWER TO HOIST A CONTROLLER AND HOIST A BRAKE COIL	A1. FAILS OPEN (ANY OR ALL SETS) B1. INTERNAL PART FAILURE	HOIST A INOPERATIVE	DELAY IN OPERATIONS	3
			A2. FAILS CLOSED (ANY OR ALL SETS) B2. INTERNAL PART FAILURE	CONTINUOUS POWER TO HOIST A CONTROLLER. POWER CAN BE REMOVED BY OPENING CIRCUIT BREAKER CKT.CB101	DELAY IN OPERATIONS	3
N1-AUX	N.C. CONTACTS IN SERIES WITH UPPER LIMIT E-STOP INPUT OF MOTOR CONTROLLER.	WHEN CLOSED PROVIDES +24vdc TO UPPER LIMIT E-STOP OF MOTOR CONTROLLER A.	A1. FAILS OPEN. B1. INTERNAL PART FAILURE	HOIST INOPERATIVE, BRAKES SET.	DELAY IN OPERATIONS	3
		HALTS HOIST A WHEN OVER-TEMP OR SPOOLING ERROR OCCURS.	A2. FAILS CLOSED B2. INTERNAL PART FAILURE.	E-STOP INPUT LINE TO MOTOR CONTROLLER WILL NOT HALT HOIST A WHEN OVER-TEMP OR SPOOLING ERROR OCCURS. MOTOR FALIURE OR E-STOP WILL HALT HOIST A.	DELAY IN OPERATIONS	3
N1-AUX	N.O. CONTACTS IN SERIES WITH ENABLE RELAY ER1	WHEN CLOSED ENABLE THE ENABLE RELAY COIL CIRCUIT.	A1. FAILS OPEN B1. INTERNAL PART FAILURE	HOIST A INOPERATIVE.	DELAY IN OPERATIONS	3
			A2. FAILS OPEN B2. INTERNAL PART FAILURE	NONE.	NONE. REQUIRES MULTIPLE FAILURES.	3
	N.C. CONTACTS IN SERIES WITH SHUNT TRIP COIL CIRCUIT	ENABLES E-STOP SHUNT TRIP COIL CIRCUIT	A1. FAILS OPEN B1. INTERNAL PART FAILURE	UPPER HALF OF E-STOP (SHUNT TRIP CIRCUIT) WILL NOT FUNCTION. LOWER HALF OF E-STOP WILL OPERATE	NONE. REQUIRES MULTIPLE FAILURES	3
			A2. FAILS OPEN B2. INTERNAL PART FAILURE	NONE.	NONE. REQUIRES MULTIPLE FAILURES.	3

FAILURE MODES AND EFFECTS ANALYSIS (FMEA) WORKSHEET

System: 30 TON BRIDGE CRANE **Program:** SPACE STATION **Facility/Station Set:** SSPF

Subsystem: ELECTRICAL CONTROLS, HOIST

Drawing No.: 101A16061 **Sheet No.:** 1 TO 20 **Page:** 27 of 67 **Date:** 18 March, 2005

PMN: K61-2944 **Baseline:** 580.01 **Prepared by:** W. DiMeo, Boeing

FIND NO. PART NO.	PART NAME	PART FUNCTION	A. FAILURE MODE B. CAUSE C. FMN D. DETECTION METHOD E. CORRECTING ACTION F. TIME TO EFFECT G. TIMEFRAME	FAILURE EFFECT ON SYSTEM PERFORMANCE	FAILURE EFFECT ON FLIGHT HARDWARE AND/OR PERSONNEL SAFETY	CRIT CAT
RR1	START/RESET RELAY COIL	WHEN ENERGIZED IT'S CONTACTS: ENABLE AUXILIARY RELAY AC1, BYPASS RELAY BPR1 AND RESET HOIST A MOTOR CONTROLLER.	A1. FAILS OPEN B1. INTERNAL PART FAILURE	HOIST A WILL NOT OPERATE	DELAY IN OPERATIONS	3
	N.O. CONTACTS IN SERIES WITH AC1 RELAY.	ENABLES HOIST AC1 RELAY AND TDR1 RELAY.	A1. FAILS OPEN B1. INTERNAL PART FAILURE	HOIST A WILL NOT OPERATE	DELAY IN OPERATIONS	3
			A2. FAILS CLOSED. B2. INTERNAL PART FAILURE	HOIST A A/C LINE CONTACTOR N1 CONTINUOUSLY ENERGIZED. HOIST MOVEMENT ALSO REQUIRES A DIRECTION TO BE SELECTED.	NONE. REQUIRES MULTIPLE FAILURES.	3
RR1	N.O. CONTACTS IN SERIES WITH BPR1 RELAY COIL.	WHEN CLOSED ENABLES THE BYPASS RELAY BPR1.	A1. FAILS OPEN. B1. INTERNAL PART FAILURE	UNABLE TO USE BYPASS FEATURE TO RESTART HOIST AFTER UPPER LIMIT SWITCH IS EXCEEDED.	DELAY IN OPERATIONS	3
			A2. FAILS CLOSED B2. INTERNAL PART FAILURE.	BYPASS RELAYCONTINUOUSLY ENERGIZED.	NONE. REQUIRES MULTIPLE FAILURES	3
RR1	N.O. CONTACTS IN SERIES WITH DRIVE RESET LINE OF HOIST A CONTROLLER	WHEN CLOSED RESTATES HOIST A CONTROLLER.	A1. FAILS OPEN B1. INTERNAL PART FAILURE	UNABLE TO RESET HOIST A DRIVE.	DELAY IN OPERATIONS	3
			A2. FAILS CLOSED B2. INTERNAL PART FAILURE	HOIST A DRIVE CONTINUOUSLY RESET.	DELAY IN OPERATIONS	3

FAILURE MODES AND EFFECTS ANALYSIS (FMEA) WORKSHEET

System: 30 TON BRIDGE CRANE **Program:** SPACE STATION **Facility/Station Set:** SSPF

Subsystem: ELECTRICAL CONTROLS, HOIST

Drawing No.: 101A16061 **Sheet No.:** 1 TO 20 **Page:** 28 of 67 **Date:** 18 March, 2005

PMN: K61-2944 **Baseline:** 580.01 **Prepared by:** W. DiMeo, Boeing

FIND NO. PART NO.	PART NAME	PART FUNCTION	A. FAILURE MODE B. CAUSE C. FMN D. DETECTION METHOD E. CORRECTING ACTION F. TIME TO EFFECT G. TIMEFRAME	FAILURE EFFECT ON SYSTEM PERFORMANCE	FAILURE EFFECT ON FLIGHT HARDWARE AND/OR PERSONNEL SAFETY	CRIT CAT
AC1	AUXILIARY RELAY COIL	WHEN ENERGIZED ENABLES EMERGENCY STOP RELAY, AC LINE CONTACTOR (N4) AND ENABLE RELAY (ER4)	A1. FAILS OPEN B1. INTERNAL PART FAILURE	BRIDGE WILL NOT OPERATE.	DELAY IN OPERATIONS	3
	AUXILARY RELAY N.O CONTACTS IN SERIES WITH AC1 COIL	WHEN ENERGIZED PROVIDES LOCKING CURRENT PATH FOR AC1 COIL	A1. FAILS OPEN B1. INTERNAL PART FAILURE	HOIST WILL NOT OPERATE.	DELAY IN OPERATIONS	3
			A2. FAILS CLOSE B2. INTERNAL PART FAILURES	AC1 RELAY CONTINUOSLY ENABLED AS LONG AS ESR1 FR1, ULSR1 OR BPR1, AND CR2 ARE CLOSED	NONE. REQUIRES MULTIPLE FAILURES	3
	N.O CONTACTS IN SERIES WITH ESR1 (EMERGENCY STOP RELAY)	WHEN CLOSED ENABLES EMERGENCY STOP RELAY	A1. FAILS OPEN B1. INTERNAL PART FAILURE	HOIST INOPERABLE.	DELAY IN OPERATIONS	3
			A2. FAILS CLOSE B2. INTERNAL PARTS FAILURE	NONE. REQUIRES MULTIPLE FAILURES	DELAY IN OPERATIONS	3
	N.O. CONTACTS IN SERIES WITH N1 (A.C. LINE CONTACTOR)	WHEN CLOSED ENABLES A.C. LINE CONTACTOR (N1)	A1. FAILS OPEN B1. INTERNAL PART FAILURE	HOIST A INOPERABLE.	DELAY IN OPERATIONS	3
			A2. FAILS CLOSED B2.INTERNAL PART FAILURE	A.C. CONTACTOR (N1) CONSTANTLY ENABLED	NONE. REQUIRES MULTIPLE FAILURES	3

FAILURE MODES AND EFFECTS ANALYSIS (FMEA) WORKSHEET

System: 30 TON BRIDGE CRANE **Program:** SPACE STATION **Facility/Station Set:** SSPF

Subsystem: ELECTRICAL CONTROLS, HOIST

Drawing No.: 101A16061 **Sheet No.:** 1 TO 20 **Page:** 29 **of** 67 **Date:** 18 March, 2005

PMN: K61-2944 **Baseline:** 580.01 **Prepared by:** W. DiMeo, Boeing

FIND NO. PART NO.	PART NAME	PART FUNCTION	A. FAILURE MODE B. CAUSE C. FMN D. DETECTION METHOD E. CORRECTING ACTION F. TIME TO EFFECT G. TIMEFRAME	FAILURE EFFECT ON SYSTEM PERFORMANCE	FAILURE EFFECT ON FLIGHT HARDWARE AND/OR PERSONNEL SAFETY	CRIT CAT
AC1	N.O. CONTACTS IN SERIES WITH ENABLE RELAY	WHEN CLOSED ENABLES THE ENABLE RELAY	A1. FAILS OPEN B1. INTERNAL PART FAILURE	HOIST A INOPERABLE.	DELAY IN OPERATIONS	3
			A2. FAILS CLOSED B2.INTERNAL PART FAILURE	HOIST A DRIVE CONSTANTLY ENABLED	NONE. REQUIRES MULTIPLE FAILURES	3
TDR1	TIME DELAY RELAY COIL	PROVIDES TIME DELAY FOR ENERGIZING OF A/C LINE CONTACTOR (N1)	A1. FAILS OPEN B1. INTERNAL PART FAILURE	HOIST A INOPERATIVE	DELAY IN OPERATIONS	3
	NORMALLY OPEN CONTACTS IN SERIES WITH N1	WHEN CLOSED ENABLES N1 CONTACTOR COIL CIRCUIT.	A1. FAILS OPEN B1. INTERNAL PART FAILURE	HOIST A INOPERATIVE	DELAY IN OPERATION	3
			A2. FAILS CLOSED. B2. INTERNAL PART FAILURE	A/C LINE CONTACTOR N1 CONTINUOUSLY ENERGIZED.	NONE. REQUIRES MULTIPLE FAILURES.	3
ESR1	EMERGENCY STOP RELAY.	WHEN DE-ENERGIZED DISABLES MOTOR CONTROLLER ENABLING BRAKE AND DE-CEL CIRCUITS	A1. FAILS OPEN. B1. INTERNAL PART FAILURE	HOIST INOPERATIVE	DELAY IN OPERATIONS	3
	N.O. CONTACTS IN SERIES WITH AC1.	ENABLES LOCKING CIRCUIT OF AC1.	A1. FAILS CLOSED B1. INTERNAL PART FAILURE.	AC1 (AUXILIARY RELAY) WILL NOT LOCK.	DELAY IN OPERATIONS	3
			A2. FAILS CLOSED B2. INTERNAL PART FAILURE	NONE. REQUIRES FAILURE OF ULSR1 AND FR1 ALSO.	DELAY IN OPERATIONS	3

FAILURE MODES AND EFFECTS ANALYSIS (FMEA) WORKSHEET

System: 30 TON BRIDGE CRANE **Program:** SPACE STATION **Facility/Station Set:** SSPF

Subsystem: ELECTRICAL CONTROLS, HOIST

Drawing No.: 101A16061 **Sheet No.:** 1 TO 20 **Page:** 30 of 67 **Date:** 18 March, 2005

PMN: K61-2944 **Baseline:** 580.01 **Prepared by:** W. DiMeo, Boeing

FIND NO. PART NO.	PART NAME	PART FUNCTION	A. FAILURE MODE B. CAUSE C. FMN D. DETECTION METHOD E. CORRECTING ACTION F. TIME TO EFFECT G. TIMEFRAME	FAILURE EFFECT ON SYSTEM PERFORMANCE	FAILURE EFFECT ON FLIGHT HARDWARE AND/OR PERSONNEL SAFETY	CRIT CAT
ESR1	N.O. CONTACTS IN SERIES WITH UPPER LIMIT E-STOP INPUT OF HOIST MOTOR CONTROLLER.	WHEN CLOSED PROVIDES +24 VDC TO UPPER LIMIT STOP INPUT OF MOTOR CONTROLLER.	A1. FAILS OPEN B1. INTERNAL PART FAILURE	HOIST INOPERATIVE, BRAKE SET.	DELAY IN OPERATIONS	3
			A2. FAILS CLOSED B2. INTERNAL PART FAILURE	HOIST WILL NOT STOP ON MOTOR OVERTEMP OR SPOOLING ERROR. E-STOPOR MOTOR FAILURE WILL HALT HOIST.	NONE. REQUIRES MULTIPLE FAILURES.	3
	N.C. CONTACTS IN SERIES WITH HOIST A FAILURE INDICATOR	WHEN CLOSED TURNS ON HOIST A FAILURE INDICATOR.	A1. FAILS OPEN B1. INTERNAL PART FAILURE	HOIST A FAILURE WILL NOT BE INDICATED BY LAMP.	DELAY IN OPERATIONS	3
	N.C. CONTACTS IN SERIES WITH HOIST A FAILURE INDICATOR		A2. FAILS OPEN B2. INTERNAL PART FAI LURE	HOIST A FAILURE INDICATOR LAMP CONTIUOUSLY ILLUMINATED.	DELAY IN OPERATIONS	3
	N.C. CONTACTS IN SERIES WITH LOAD IMBALANCE LAMP.	TURNS ON LOAD IMBALANCE INDICATOR.	A1. FAILS CLOSED. B1. INTERNAL PART FAILURE	A LOAD IMBALANCE WILL NOT BE INDICATED BY LAMP..	DELAY IN OPERATIONS.	3

FAILURE MODES AND EFFECTS ANALYSIS (FMEA) WORKSHEET

System: 30 TON BRIDGE CRANE **Program:** SPACE STATION **Facility/Station Set:** SSPF
Subsystem: ELECTRICAL CONTROLS, HOIST
Drawing No.: 101A16061 **Sheet No.:** 1 TO 20 **Page:** 31 of 67 **Date:** 18 March, 2005
PMN: K61-2944 **Baseline:** 580.01 **Prepared by:** W. DiMeo, Boeing

FIND NO. PART NO.	PART NAME	PART FUNCTION	A. FAILURE MODE B. CAUSE C. FMN D. DETECTION METHOD E. CORRECTING ACTION F. TIME TO EFFECT G. TIMEFRAME	FAILURE EFFECT ON SYSTEM PERFORMANCE	FAILURE EFFECT ON FLIGHT HARDWARE AND/OR PERSONNEL SAFETY	CRIT CAT
BPR1	BYPASS RELAY 1 COIL.	WHEN ENERGIZED ALLOWS HOIST TO BE OPERATED WHEN UPPER LIMIT SWITCH HAS BEEN REACHED.	A1. FAILS OPEN. B1. INTERNAL PART FAILURE	UNABLE TO USE BYPASS UPPER LIMIT SWITCH.	DELAY IN OPERATIONS	3
	N.O. CONTACTS IN PARALLEL WITH START/RESET RELAY CONTACTS	ACTS AS LOCKING CONTACTS FOR BPR1 RELAY.	A1. FAILS OPEN B1. INTERNAL PART FAILURE	UNABLE TO LOWER HOIST AFTER UPPER LIMIT SWITCH HAS BEEN REACHED.	DELAY IN OPERATIONS	3
			A2. FAILS CLOSED B2. INTERNAL PART FAILURE	BYPASS RELAY CONTINUOUSLY ENERGIZED.	NONE. REQUIRES MULTIPLE FAILURE.	3
	N.O. CONTACTS IN PARALLEL WITH ULSR1 CONTACTS OF AC1 COIL CIRCUIT.	ALLOW AC1 COIL TO BE ENERGIZED IN THE EVENT UPPER LIMIT IS REACHED SO HOIST CAN BE LOWERED.	A1. FAILS OPEN B1. INTERNAL PART FAILURE	INABILITY TO LOWER CRANE FROM UPPER LIMIT POSITION.	DELAY IN OPERATIONS	3
			A2. FAILS CLOSED B2. INTERNAL PART FAILURE	ACI (AUXILARY RELAY)WILL REMAIN ENERGIZED EVEN IF UPPER LIMIT IS REACHED	NONE. REQUIRES MULTIPLE FAILURES	3
ER1	ENABLE RELAY 1 COIL.	WHEN ENERGIZED ENABLES HOIST MOTOR DRIVE.	A1. FAILS OPEN B1. INTERNAL PART FAILURE	HOIST INOPERATIVE.	DELAY IN OPERATIONS	3
	N.O. CONTACTS IN SERIES WITH ENABLE RELAY COIL.	WHEN CLOSED ALLOWS AC LINE CONTACTOR TO BE ENERGIZED.	A1. FAILS OPEN B1. INTERNAL PART FAILURE	DRIVE WILL NOT BE ENABLED IN LOWER MODE AFTER UPPER LIMIT SWITCH IS REACHED.	DELAY IN OPERATIONS	3
			A2. FAILS CLOSED B2. INTERNAL PART FAILURE	NONE.	NONE. REQUIRES MULTIPLE FAILURE.	3

FAILURE MODES AND EFFECTS ANALYSIS (FMEA) WORKSHEET

System: 30 TON BRIDGE CRANE **Program:** SPACE STATION **Facility/Station Set:** SSPF

Subsystem: ELECTRICAL CONTROLS, HOIST

Drawing No.: 101A16061 **Sheet No.:** 1 TO 20 **Page:** 32 of 67 **Date:** 18 March, 2005

PMN: K61-2944 **Baseline:** 580.01 **Prepared by:** W. DiMeo, Boeing

FIND NO. PART NO.	PART NAME	PART FUNCTION	A. FAILURE MODE B. CAUSE C. FMN D. DETECTION METHOD E. CORRECTING ACTION F. TIME TO EFFECT G. TIMEFRAME	FAILURE EFFECT ON SYSTEM PERFORMANCE	FAILURE EFFECT ON FLIGHT HARDWARE AND/OR PERSONNEL SAFETY	CRIT CAT
ER1	N.O. CONTACTS IN SERIES WITH AC LINE CONTACTOR N1.	WHEN CLOSED ENABLES MOTOR CONTROLLER.	A1. FAILS OPEN B1. INTERNAL PART FAILURE	UNABLE TO RESTART HOIST ONCE STOPPED.	DELAY IN OPERATIONS.	3
			A2. FAILS CLOSED B2. INTERNAL PART FAILURE	NONE	NONE REQUIRES MULTIPLE FAILURES.	3
	N.O. CONTACTS IN SERIES WITH DRIVE ENABLE INPUT OF HOIST MOTOR CONTROLLER.	WHEN CLOSED ENABLES MOTOR CONTROLLER.	A1. FAILS OPEN B1. INTERNAL PART FAILURE	HOIST INOPERATIVE	DELAY IN OPERATIONS	3
			A2. FAILS CLOSED B2. INTERNAL PART FAILURE	MOTOR CONTROLLER CONTINOUSLY ENERGIZED	NONE REQUIRES MULTIPLE FAILURES.	3
BC1	BRAKE CONTACTOR COIL	WHEN CLOSED ENABLES MOTOR CONTROLLER	A1. RFAILS OPEN B1. INTERNAL PART FAILURE	MOTOR CONTROLLER CONTINUOSLY ENERGIZED	NONE. REQUIRES MULTIPLE FAILURES	3
	N.O. CONTACTS IN SERIES WITH RR1 RELAY COIL	WHEN CLOSED LOCKS BC1 CONTACTOR ON AFTER HOIST RAISE OR LOWER SWITCH IS RELEASED	A1. RFAILS OPEN B1. INTERNAL PART FAILURE	IMPROPER BRAKING SEQUENCE	NONE. REQUIRES MULTIPLE FAILURES.	3
			A2. FAILS CLOSED B2. INTERNAL PARTS FAILURE	HOIST BRAKE CONTACTOR WILL REMAINCLOSED AFTER RELEASE OF DIRECTION CONTROL. MOTOR CONTROLLER CONTACTS BCR1 WILL OPEN BRAKE CIRCUIT. E-STOP WILL REMOVE POWER	NONE. REQUIRES MULTIPLE FAILURES.	3

FAILURE MODES AND EFFECTS ANALYSIS (FMEA) WORKSHEET

System: 30 TON BRIDGE CRANE **Program:** SPACE STATION **Facility/Station Set:** SSPF

Subsystem: ELECTRICAL CONTROLS, HOIST

Drawing No.: 101A16061 **Sheet No.:** 1 TO 20 **Page:** 33 of 67 **Date:** 18 March, 2005

PMN: K61-2944 **Baseline:** 580.01 **Prepared by:** W. DiMeo, Boeing

FIND NO. PART NO.	PART NAME	PART FUNCTION	A. FAILURE MODE B. CAUSE C. FMN D. DETECTION METHOD E. CORRECTING ACTION F. TIME TO EFFECT G. TIMEFRAME	FAILURE EFFECT ON SYSTEM PERFORMANCE	FAILURE EFFECT ON FLIGHT HARDWARE AND/OR PERSONNEL SAFETY	CRIT CAT
BC1	N.C. CONTACTS IN SERIES WITH RB1 RELAY COIL.	WHEN CLOSED ENABLES RB1 (START/RESET RELAY) CIRCUIT AND WHEN OPENED (BRAKES RELEASED) INHIBITS START/RESET CIRCUIT.	A1. FAILS OPEN B1. INTERNAL PART FAILURE	UNABLE TO START OR RESET HOIST.	DELAY IN OPERATIONS	3
			A2. FAILS CLOSED B2. INTERNAL PART FAILURE	ABLE TO START OR RESET THE DRIVE A WHILE OPERATION IN PROGRESS.	DELAY IN OPERATIONS	3
	N.O. CONTACTS (TWO SETS) IN SERIES WITH INPUT LINES TO HOIST BRAKE RECTIFIER/CONTROL LER	WHEN CLOSED APPLIES POWER TO HOIST BRAKE RECTIFIER/CONTROL LER	A1. FAILS OPEN B1. INTERNAL PART FAILURE	HOIST BRAKE WILL NOT RELEASE	DELAY IN OPERATION	3
			A2. FAILS CLOSED B2. INTERNAL PART FAILURE	HOIST BRAKES WILL BE CONTINUOSLY ENERGIZED(RELEASED). BOTH SETS OF CONTACTS WOULD HAVE TO FAIL CLOSED.	NONE. REQUIRES MULTIPLE FAILURES	3
MOR1	MOTOR A OVERTEMP RELAY COIL	WHEN ENERGIZED, OPENS CIRCUIT TO EMERGENCY STOP RELAY, LIGHTS MOTOR OVERTEMP LIGHT	A1. FAILS OPEN B1. INTERNAL PART FAILURE	MOTOR OVERTEMP CONDITION MAY GO UNNOTICED	REQUIRES MULTIPL;E FAILURES	3

FAILURE MODES AND EFFECTS ANALYSIS (FMEA) WORKSHEET

System: 30 TON BRIDGE CRANE **Program:** SPACE STATION **Facility/Station Set:** SSPF

Subsystem: ELECTRICAL CONTROLS, HOIST

Drawing No.: 101A16061 **Sheet No.:** 1 TO 20 **Page:** 34 of 67 **Date:** 18 March, 2005

PMN: K61-2944 **Baseline:** 580.01 **Prepared by:** W. DiMeo, Boeing

FIND NO. PART NO.	PART NAME	PART FUNCTION	A. FAILURE MODE B. CAUSE C. FMN D. DETECTION METHOD E. CORRECTING ACTION F. TIME TO EFFECT G. TIMEFRAME	FAILURE EFFECT ON SYSTEM PERFORMANCE	FAILURE EFFECT ON FLIGHT HARDWARE AND/OR PERSONNEL SAFETY	CRIT CAT
MOR1	N.C. CONTACTS IN SERIES WITH EMERGENCY STOP RELAY (ESR-1)	WHEN CLOSED ENABLE EMERGENCY STOP RELAY COIL (INDICATING NO EMERGENCY)	A1. FAILS OPEN B1. INTERNAL PART FAILURE	ESR-1 CIRCUIT WILL OPEN CAUSING MOTOR CONTROLLER TO DETECT A FAULT	DELAY IN OPERATIONS	3
			A2. FAILS CLOSED B2. INTERNAL PART FAILURE	AN OVERHEAT CONDITION OF MOTOR1 (HOIST A) WILL GO UNDETECTED BY CONTROLLER. OVERTEMP LAMP WILL STILL FUNCTION, AND LOAD CAN STILL BE HELD BY REDUNDANT MOTOR.	NONE. REQUIRES MULTIPLE FAILURES	3
	N.O. CONTACTS IN SERIES WITH OVERTEMP LAMP	WHEN CLOSED ILLUMINATES OVERTEMP LAMP	A1. FAILS OPEN B1. INTERNAL PART FAILURE	AN OVERHEAT CONDITION WILL NOT BE INDICATED BY THE OVERHEAT LAMP. MOTOR CONTROLLER WILL ACT ON THE OVERHEAT CONDITION.	NONE. REQUIRES MULTIPLE FAILURES	3
MOWR1	MOTOR A OVERTEMP WARNING RELAY COIL	WHEN DEENERGIZED, ILLUMINATES MOTOR OVERTEMP WARNING LAMP	A1. FAILS OPEN B1. INTERNAL PART FAILURE	AN OVERTEMP WARNING WILL BE INDICATED BY A WARNING ALMP	DELAY IN OPERATIONS	3

FAILURE MODES AND EFFECTS ANALYSIS (FMEA) WORKSHEET

System: 30 TON BRIDGE CRANE **Program:** SPACE STATION **Facility/Station Set:** SSPF

Subsystem: ELECTRICAL CONTROLS, HOIST

Drawing No.: 101A16061 **Sheet No.:** 1 TO 20 **Page:** 35 of 67 **Date:** 18 March, 2005

PMN: K61-2944 **Baseline:** 580.01 **Prepared by:** W. DiMeo, Boeing

FIND NO. PART NO.	PART NAME	PART FUNCTION	A. FAILURE MODE B. CAUSE C. FMN D. DETECTION METHOD E. CORRECTING ACTION F. TIME TO EFFECT G. TIMEFRAME	FAILURE EFFECT ON SYSTEM PERFORMANCE	FAILURE EFFECT ON FLIGHT HARDWARE AND/OR PERSONNEL SAFETY	CRIT CAT
MOWR1	N.C. CONTACTS IN SERIES WITH OVERTEMP WARNING ALMP	WHEN CLOSED ILLUMINATES OVERTEMP WARNING LAMP, INDICATING MOTOR 1 IS OPERATING ABOVE NORMAL TEMPERATURE.	A1. FAILS OPEN B1. INTERNAL PART FAILURE	AN OVERTEMP WARNING WILL BE INDICATED BY A WARNING LAMP.	DELAY IN OPERATIONS	3
			A2. FAILS CLOSED B2. INTERNAL PART FAILURE	OVERTEMP WARNING LAMP WILL BE CONTINUOSLY ILLUMNATED	NONE. REQUIRES MULTIPLE FAILURES	
MOM101	MOTOR OVERTEMP MODULE	MONITORS OVERTEMP SENSOR	A1. LOW/NO OUTPUT B1. INTERNAL PART FAILURE	MOTOR OVERHEAT CONDITION MAY GO UNNOTICED	NONE. REQUIRES MULTIPLE FAILURES	3
			A2. HIGH OUTPUT B2. INTERNAL PART FAILURE	FALSE MOTER A OVERHEAT INDICATION	DELAY IN OPERATIONS	3
	MOTOR OVERTEMP WARNING MODULE	MONITORS OVERTEMP WARNING SENSOR	A1. LOW/NO OUTPUT B1. INTERNAL PART FAILURE	MOTOR OVERTEMP CONDITION MAY GO UNNOTICED	NONE. REQUIRES MULTIPLE FAILURES	3
			A2. HIGH OUTPUT B2. INTERNAL PART FAILURE	FALSE MOTOR A OVERTEMP INDICATION	DELAY IN OPERATIONS	
NONE	OVERTEMP SENSOR	MONITORS MOTOR A TEMPERATURE	A1. LOW/NO OUTPUT B1. INTERNAL PART FAILURE	MOTOR OVER HEAT CONDITION MAY GO UNNOTICED	NONE. REQUIRES MULTIPLE FAILURES	3
			A2. HIGH OUTPUT B2. INTERNAL PART FAILURE	FALSE MOTOR A OVERHEAT INDICATION	DELAY IN OPERATIONS	3

FAILURE MODES AND EFFECTS ANALYSIS (FMEA) WORKSHEET

System: 30 TON BRIDGE CRANE **Program:** SPACE STATION **Facility/Station Set:** SSPF

Subsystem: ELECTRICAL CONTROLS, HOIST

Drawing No.: 101A16061 **Sheet No.:** 1 TO 20 **Page:** 36 **of** 67 **Date:** 18 March, 2005

PMN: K61-2944 **Baseline:** 580.01 **Prepared by:** W. DiMeo, Boeing

FIND NO. PART NO.	PART NAME	PART FUNCTION	A. FAILURE MODE B. CAUSE C. FMN D. DETECTION METHOD E. CORRECTING ACTION F. TIME TO EFFECT G. TIMEFRAME	FAILURE EFFECT ON SYSTEM PERFORMANCE	FAILURE EFFECT ON FLIGHT HARDWARE AND/OR PERSONNEL SAFETY	CRIT CAT
NONE	WARNING SENSOR	MONITORS MOTOR A TEMPERATURE	A1. LOW/NO OUTPUT B1. INTERNAL PART FAILURE	MOTOR OVER HEAT CONDITION MAY GO UNNOTICED	NONE. REQUIRES MULTIPLE FAILURES	3
			A2. HIGH OUTPUT B2. INTERNAL PART FAILURE	FALSE MOTOR A OVERHEAT INDICATION	DELAY IN OPERATIONS	3
RR2	START/RESET RELAY COIL	WHEN ENERGIZED ITS CONTACTS: ENABLE AUXILIARY REALY AC2, BYPASS RELAY BPR2 AND REST HOIST B MOTOR CONTROLLER	A1. FAILS OPEN B1. INTERNAL FAILURE PART	HOIST B WILL NOT OPERATE	DELAY IN OPERATIONS	3
	N.O. CONTACTS IN SERIES WITH AC1 RELAY	ENABLES HOIST AC2 REALY AND TDR2 RELAY	A1. FAILS OPEN B1. INTERNAL PART FAILURE	HOIST WILL NOT OPERATE	DELAY IN OPERATIONS	3
			A2. FAILS CLOSE B2. INTERNAL PART FAILURE	HOIST B AC LINE CONTACTOR N1 CONTINUOSLY ENERGIZED. HOIST MOVEMENT ALSO REQUIRES A DIRECTION TO BE SELECTED.	NONE. REQUIRES MULTIPLE FAILURES	3
	N.O. CONTACTS IN SERIES WITH BPR1 RELAY COIL	WHEN CLOSED ENABLES THE BYPASS RELAY BPR2	A1. FAILS OPEN B1. INTERNAL PART FAILURE	UNABLE TO USE BYPASS FEATURE TO RESTART HOIST AFTER UPPER LIMIT SWITCH IS EXCEEDED.	DELAY IN OPERATIONS	3
	N.O. CONTACTS IN SERIES WITH AC2 RELAYL	WHEN CLOSED ENABLES THE AC2 RELAY	A2. FAILS CLOSED B2. INTERNAL PART FAILURE	BYPASS RELAY CONTINUOSLY ENERGIZED.	DELAY IN OPERATIONS	3

FAILURE MODES AND EFFECTS ANALYSIS (FMEA) WORKSHEET

System: 30 TON BRIDGE CRANE **Program:** SPACE STATION **Facility/Station Set:** SSPF

Subsystem: ELECTRICAL CONTROLS, HOIST

Drawing No.: 101A16061 **Sheet No.:** 1 TO 20 **Page:** 37 of 67 **Date:** 18 March, 2005

PMN: K61-2944 **Baseline:** 580.01 **Prepared by:** W. DiMeo, Boeing

FIND NO. PART NO.	PART NAME	PART FUNCTION	A. FAILURE MODE B. CAUSE C. FMN D. DETECTION METHOD E. CORRECTING ACTION F. TIME TO EFFECT G. TIMEFRAME	FAILURE EFFECT ON SYSTEM PERFORMANCE	FAILURE EFFECT ON FLIGHT HARDWARE AND/OR PERSONNEL SAFETY	CRIT CAT
RR2	N.O. CONTACTS IN SERIES WITH DRIVE RESET LINE OF HOIST A CONTROLLER	WHEN CLOSED RESETS HOIST B CONTROLLER	A1. FAILS OPEN B1. INTERNAL PART FAILURE	UNABLE TO RESET HOIST B DRIVE	DELAY IN OPERATIONS	3
			A2. FAILS CLOSE B2. INTERNAL PART FAILURE	HOIST B DRIVE CONTINUOSLY RESET	DELAY IN OPERATIONS	3
AC2	AUXILIARY RELAY COIL	WHEN ENERGIZED ENABLES EMERGENCY STOP RELAY, AC LINE CONTACTOR (N2) AND ENABLE RELAY (ER2)	A1. FAILS OPEN B1. INTERNAL PART FAILURE	BRIDGE WILL NOT OPERATE	DELAY IN OPERATIONS	3
	AUXILIARY RELAY N.O. CONTACTS IN SERIES WITH AC2 COIL	WHEN ENERGIZED PROVIDES LOCKING CURRENT PATH FOR AC2 COIL	A1. FAILS OPEN B1. INTERNAL PART FAILURE	HOIST B WILL NOT OPERATE	DELAY IN OPERATIONS	3
			A2. FAILS CLOSE B2. INTERNAL PART FAILURE	AC2 REALY CONTINUOSLY ENABLED AS LONG AS ESR1 FR2, ULSR2 OR BPR2 AND CR2 ARE CLOSED	NONE. REQUIRES MULTIPLE FAILURES	3
	N.O. CONTACTS IN SERIES WITH ESR2 (EMERGENCY STOP RELAY)	WHEN CLOSED ENABLES EMERGENCY STOP RELAY	A1. FAILS OPEN B1. INTERNAL PART FAILURE	HOIST INOPERABLE	DELAY IN OPERATIONS	3
			A2. FAILS CLOSE B2. INTERNAL PART FAILURE	NONE	NONE. REQUIRES MULTIPLE FAILURES	3

FAILURE MODES AND EFFECTS ANALYSIS (FMEA) WORKSHEET

System: 30 TON BRIDGE CRANE **Program:** SPACE STATION **Facility/Station Set:** SSPF

Subsystem: ELECTRICAL CONTROLS, HOIST

Drawing No.: 101A16061 **Sheet No.:** 1 TO 20 **Page:** 38 of 67 **Date:** 18 March, 2005

PMN: K61-2944 **Baseline:** 580.01 **Prepared by:** W. DiMeo, Boeing

FIND NO. PART NO.	PART NAME	PART FUNCTION	A. FAILURE MODE B. CAUSE C. FMN D. DETECTION METHOD E. CORRECTING ACTION F. TIME TO EFFECT G. TIMEFRAME	FAILURE EFFECT ON SYSTEM PERFORMANCE	FAILURE EFFECT ON FLIGHT HARDWARE AND/OR PERSONNEL SAFETY	CRIT CAT
AC2	N.O. CONTACTS IN SERIES WITH N2 (A.C. LINE CONTACTOR)	WHEN CLOSED ENABLES A.C LINE CONTACTOR (N2)	A1. FAILS OPEN B1. INTERNAL PART FAILURE	HOIST MOTOR B INOPERATIVE	DELAY IN OPERATIONS	3
			A2. FAILS CLOSE B2. INTERNAL PART FAILURE	A.C. CONTACTOR (N1) CONSTANTLY ENABLED	NONE. REQUIRES MULTIPLE FAILURES	3
	N.O. CONTACTS IN SERIES WITH ENABLE RELAY	WHEN CLOSED ENABLES THE ENABLE RELAY (ER2)	A1. FAILS OPEN B1. INTERNAL PART FAILURE	HOIST MOTOR B INOPERATIVE	DELAY IN OPERATIONS	3
			A2. FAILS CLOSE B2. INTERNAL PART FAILURE	HOIST MOTOR B DRIVE CONSTANTLY ENABLED	NONE. REQUIRES MULTIPLE FAILURES	3
TDR2	TIME DELAY RELAY	PROVIDES TIME DELAY FOR ENERGIZATION OF A.C. LINE CONTACTOR (N2)	A1. FAILS OPEN B1. INTERNAL PART FAILURE	HOIST B MOTOR INOPERATIVE	DELAY IN OPERATIONS	3
	NORMALLY OPENS CONTACTS IN SERIES WITH N2	WHEN CLOSED ENABLES N2 CONTACTOR COIL CIRCUIT	A1. FAILS OPEN B1. INTERNAL PART FAILURE	HOIST MOTOR B INOPERABLE	DELAY IN OPERATIONS	3
			A2. FAILS CLOSE B2. INTERNAL PART FAILURE	A.C. LINE CONTACTOR (N2) CONTINUOSLY ENERGIZED	NONE. REQUIRES MULTIPLE FAILURES	3
ESR2	EMERGENCY STOP RELAY COIL	WHEN DE-ENERGIZED, DISABLES MOTOR CONTROLLER ENABLING BRAKE AND DE-CEL CIRCUITS	A1. FAILS OPEN B1. INTERNAL PART FAILURE	HOIST CONTROLLER B INOPERATIVE	DELAY IN OPERATIONS	3

FAILURE MODES AND EFFECTS ANALYSIS (FMEA) WORKSHEET

System: 30 TON BRIDGE CRANE **Program:** SPACE STATION **Facility/Station Set:** SSPF

Subsystem: ELECTRICAL CONTROLS, HOIST

Drawing No.: 101A16061 **Sheet No.:** 1 TO 20 **Page:** 39 of 67 **Date:** 18 March, 2005

PMN: K61-2944 **Baseline:** 580.01 **Prepared by:** W. DiMeo, Boeing

FIND NO. PART NO.	PART NAME	PART FUNCTION	A. FAILURE MODE B. CAUSE C. FMN D. DETECTION METHOD E. CORRECTING ACTION F. TIME TO EFFECT G. TIMEFRAME	FAILURE EFFECT ON SYSTEM PERFORMANCE	FAILURE EFFECT ON FLIGHT HARDWARE AND/OR PERSONNEL SAFETY	CRIT CAT
ESR2	N.O. CONTACTS IN SERIES WITH AC2	ENABLES LOCKING CIRCUIT OF AC2	A1. FAILS OPEN B1. INTERNAL PART FAILURE	AC2 (AUXILIARY RELAY) WILL NOT LOCK	DELAY IN OPERATIONS	3
			A2. FAILS CLOSE B2. INTERNAL PART FAILURE	NONE. REQUIRES FAILURE OF ULSR2 AND FR2 ALSO.	NONE. REQUIRES DOUBLE FAILURES	3
	N.O. CONTACTS IN SERIES WITH UPPER LIMIT E-STOP INPUT OF HOIST MOTOR CONTROLLER	CLOSED UNDER NORMAL CONDITIONS. WHEN OPENED, ENABLES MOTOR CONTROLLER BRAKE AND DE-CEL CIRCUITS	A1. FAILS OPEN B1. INTERNAL PART FAILURE	HOIST B INOPERATIVE	DELAY IN OPERATIONS	3
			A2. FAILS CLOSE B2. INTERNAL PART FAILURE	HOIST WILL NOT STOP ON MOTOR OVERTEMP OR SPOOLING ERROR. E-STOP OR MOTOR FAILURE WILL HALT HOIST	NONE. REQUIRES MULTIPLE FAILURES	3
	N.C. CONTACTS IN SERIES WITH HOIST MOTOR B FAILURE INDICATIOR	WHEN CLOSED TURNS ON HOIST MOTOR B FAILURE INDICATOR	A1. FAILS OPEN B1. INTERNAL PART FAILURE	HOIST MOTOR B FAILURE WILL NOT BE INDICATED BY LAMP	DELAY IN OPERATIONS	3
			A2. FAILS CLOSE B2. INTERNAL PART FAILURE	HOIST MOTOR B FAILURE INDICATOR LAMP CONTINUOSLY ILLUMINATED	DELAY IN OPERATIONS	3
	N.C. CONTACTS IN SERIES WITH LOAD IMBALANCE LAMP	TURNS ON LOAD IMBALANCE INDICATOR	A1. FAILS OPEN B1. INTERNAL PART FAILURE	A LOAD IMBALANCE WILL NOT BE INDICATED BY LAMP	DELAY IN OPERATIONS	3
			A2. FAILS CLOSE B2. INTERNAL PART FAILURE	CONTINUOSLY LOAD IMBALANCE INDICATION	DELAY IN OPERATIONS	3

FAILURE MODES AND EFFECTS ANALYSIS (FMEA) WORKSHEET

System: 30 TON BRIDGE CRANE **Program:** SPACE STATION **Facility/Station Set:** SSPF

Subsystem: ELECTRICAL CONTROLS, HOIST

Drawing No.: 101A16061 **Sheet No.:** 1 TO 20 **Page:** 40 of 67 **Date:** 18 March, 2005

PMN: K61-2944 **Baseline:** 580.01 **Prepared by:** W. DiMeo, Boeing

FIND NO. PART NO.	PART NAME	PART FUNCTION	A. FAILURE MODE B. CAUSE C. FMN D. DETECTION METHOD E. CORRECTING ACTION F. TIME TO EFFECT G. TIMEFRAME	FAILURE EFFECT ON SYSTEM PERFORMANCE	FAILURE EFFECT ON FLIGHT HARDWARE AND/OR PERSONNEL SAFETY	CRIT CAT
BPR2	BYPASS RELAY COUIL	WHEN ENERGIZES ALLOWS HOIST TO BE OPERATED WHEN UPPER LIMIT SWITCH HAS BEEN REACHED	A1. FAILS OPEN B1. INTERNAL PART FAILURE	UNABLE TO BYPASS UPPER LIMIT SWITCH	DELAY IN OPERATIONS	3
	N.O. CONTACTS IN PARALLEL WITH START/RESET RELAY CONTACTS	WHEN ENERGIZED ALLOWS HOIST TO BE OPERATED WHEN UPPER LIMIT SWITCH HAS BEEN REACHED	A1. FAILS OPEN B1. INTERNAL PART FAILURE	UNABLE TO LOWER HOIST AFTER UPPER LIMIT SWITCH HAS BEEN REACHED	DELAY IN OPERATIONS	3
			A2. FAILS CLOSE B2. INTERNAL PART FAILURE	BYPASS RELAY CONTINUOSLY ENERGIZED	NONE. REQUIRES MULTIPLE FAILURES	3
	N.C. CONTACTS IN PARALLEL WITH ULSR2 CONTACTS OF AC2 COIL CIRCUIT	ALLOWS AC2 COIL TO BE ENRGIZED IN THE EVENT UPPER LIMIT IS REACHED SO HOIST MOTOR B CAN BE LOWERED	A1. FAILS OPEN B1. INTERNAL PART FAILURE	INABILITY TO LOWER CRANE FROM UPPER LIMIT POSITION	DELAY IN OPERATIONS	3
			A2. FAILS CLOSE B2. INTERNAL PART FAILURE	AC2 (AUXILIARY RELAY) WILL REMAIN ENERGIZED EVEN IF UPPER LIMIT IS REACHED	NONE. REQUIRES MULTIPLE FAILURES	3
	N.C. CONTACTS IN PARALLEL WITH ULSR2 CONTACTS IN ER1 (ENABLE RELAY) COIL CIRCUIT	ALLOWS HOIST MOTOR B MOTOR CONTROLLER TO BE ENABLED(VIA ER1 RELAY) SO HOIST LOWER OPERATION WILL WORK AFTER UPPER LIMIT SWITCH HAS BEEN TRIPPED	A1. FAILS OPEN B1. INTERNAL PART FAILURE	INABILITY TO LOWER CRANE FROM UPPER LIMIT POSITIION	DELAY IN OPERATIONS	3

FAILURE MODES AND EFFECTS ANALYSIS (FMEA) WORKSHEET

System: 30 TON BRIDGE CRANE **Program:** SPACE STATION **Facility/Station Set:** SSPF

Subsystem: ELECTRICAL CONTROLS, HOIST

Drawing No.: 101A16061 **Sheet No.:** 1 TO 20 **Page:** 41 **of 67** **Date:** 18 March, 2005

PMN: K61-2944 **Baseline:** 580.01 **Prepared by:** W. DiMeo, Boeing

FIND NO. PART NO.	PART NAME	PART FUNCTION	A. FAILURE MODE B. CAUSE C. FMN D. DETECTION METHOD E. CORRECTING ACTION F. TIME TO EFFECT G. TIMEFRAME	FAILURE EFFECT ON SYSTEM PERFORMANCE	FAILURE EFFECT ON FLIGHT HARDWARE AND/OR PERSONNEL SAFETY	CRIT CAT
ER2	ENABLE RELAY COUIL	WHEN ENERGIZED ENABLES HOIST MOTOR B MOTOR DRIVE	A1. FAILS OPEN B1. INTERNAL PART FAILURE	HOIST INOPERATIVE	DELAY IN OPERATIONS	3
	N.O. CONTACTS IN SERIES WITH ENABLE RELAY COIL	WHEN CLOSED LOCKS ENABLE RELAY COIL	A1. FAILS OPEN B1. INTERNAL PART FAILURE	DRIVE WILL NOT BE ENABLED IN LOWER MODE AFTER UPPER LIMIT SWITCH IS REACHED	DELAY IN OPERATIONS	3
			A2. FAILS CLOSE B2. INTERNAL PART FAILURE	NONE	DELAY IN OPERATIONS	3
	N.O. CONTACTS IN SERIES WITH AC LINE CONTACTOR N2	WHEN CLOSED ALLOWS AC LINE CONTACTOR TO BE ENRGIZED	A1. FAILS OPEN B1. INTERNAL PART FAILURE	UNABLE TO RESTART HOIST ONCE STOPPED	DELAY IN OPERATIONS	3
			A2. FAILS CLOSE B2. INTERNAL PART FAILURE	NONE	DELAY IN OPERATIONS	3
	N.O. CONTACTS IN SERIES WITH DRIVE ENABLE INPUT OF HOIST MOTOR CONTROLLER	WHEN CLOSED ENABLES MOTOR CONTROLLER	A1. FAILS OPEN B1. INTERNAL PART FAILURE	HOIST INOPERATIVED	DELAY IN OPERATIONS	3

FAILURE MODES AND EFFECTS ANALYSIS (FMEA) WORKSHEET

System: 30 TON BRIDGE CRANE **Program:** SPACE STATION **Facility/Station Set:** SSPF

Subsystem: ELECTRICAL CONTROLS, HOIST

Drawing No.: 101A16061 **Sheet No.:** 1 TO 20 **Page:** 42 of 67 **Date:** 18 March, 2005

PMN: K61-2944 **Baseline:** 580.01 **Prepared by:** W. DiMeo, Boeing

FIND NO. PART NO.	PART NAME	PART FUNCTION	A. FAILURE MODE B. CAUSE C. FMN D. DETECTION METHOD E. CORRECTING ACTION F. TIME TO EFFECT G. TIMEFRAME	FAILURE EFFECT ON SYSTEM PERFORMANCE	FAILURE EFFECT ON FLIGHT HARDWARE AND/OR PERSONNEL SAFETY	CRIT CAT
BC2	BRAKE CONTACTOR COIL	WHEN ENERGIZED RELEASES HOIST BRAKE	A1. FAILS OPEN B1. INTERNAL PART FAILURE	HOIST WILL NOT RELEASE	NONE. REQUIRES MULTIPLE FAILURES	3
	N.O. CONTACTS IN SERIES WITH BRAKE CONTACTOR COIL	WHEN CLOSED LOCKS BC2 CONTACTOR ON AFTER HOIST RAISE OR LOWER SWITCH IS RELEASED	A1. FAILS OPEN B1. INTERNAL PART FAILURE	IMPROPER BRAKING SEQUENCE	DELAY IN OPERATION	3
			A2. FAILS CLOSED B2. INTERNAL PART FAILURE	HOIST BRAKE CONTACTOR WILL REMAIN CLOSED AFTER RELEASE OF DIRECTION CONTROL. MOTOR CONTROLLER CONTACTS BCR2 WILL OPEN BRAKE CIRCUIT. E-STOP WILL REMOVE POWER.	NONE. REQUIRES MULTIPLE FAILURES	3
	N.C. CONTACTS IN SERIES WITH RR2 RELAY COIL	WHEN CLOSED, ENABLES RR2 (START/RESET RELAY) CIRCUIT AND WHEN OPENED (BRAKES RELEASED) INHIBITS START/RESET CIRCUIT	A1. FAILS OPEN B1. INTERNAL PART FAILURE	UNABLE TO START OR RESET HOIST	DELAY IN OPERATIONS	3
			A2. FAILS CLOSE B2. INTERNAL PART FAILURE	ABLE TO RESET DRIVE B WITH BRAKES WHILE OPERATION IS IN PROGRESS	DELAY IN OPERATIONS	3

FAILURE MODES AND EFFECTS ANALYSIS (FMEA) WORKSHEET

System: 30 TON BRIDGE CRANE **Program:** SPACE STATION **Facility/Station Set:** SSPF
Subsystem: ELECTRICAL CONTROLS, HOIST
Drawing No.: 101A16061 **Sheet No.:** 1 TO 20 **Page:** 43 of 67 **Date:** 18 March, 2005
PMN: K61-2944 **Baseline:** 580.01 **Prepared by:** W. DiMeo, Boeing

FIND NO. PART NO.	PART NAME	PART FUNCTION	A. FAILURE MODE B. CAUSE C. FMN D. DETECTION METHOD E. CORRECTING ACTION F. TIME TO EFFECT G. TIMEFRAME	FAILURE EFFECT ON SYSTEM PERFORMANCE	FAILURE EFFECT ON FLIGHT HARDWARE AND/OR PERSONNEL SAFETY	CRIT CAT
BC2	N.O. CONTACTS(TWO SETS) IN SERIES WITH INPUT LINES TO HOIST BRAKE RECTIFIER/CONT ROLLER	WHEN CLOSED APPLIES POWER TO HOIST BRAKE RECTIFIER/CONTROL LER	A1. FAILS OPEN B1. INTERNAL PART FAILURE	HOIST BRAKE WILL NOT RELEASE	DELAY IN OPERATION	3
			A2. FAILS CLOSED B2. INTERNAL PART FAILURE	HOIST BRAKE WILL BE CONTINUOSLY ENERGIZED (RELEASED). BOTH SETS OF CONTACTS WOULD HAVE TO FAIL CLOSED	NONE. REQUIRES MULTIPLE FAILURES	3
MOR2	MOTOR B OVERTEMP COIL	WHEN ENERGIZED, OPENS CIRCUIT TO EMERGENCY STOP RELAY, LIGHTS MOTOR OVERTEMP LAMP	A1. FAILS OPEN B1. INTERNAL PART FAILURE	MOTOR OVERTEMP CONDITION MAY GO UNNOTICED	REQUIRES MULTIPLE FAILURES	3
	N.O. CONTACTS IN SERIES WITH EMERGENCY STOP RELAY (ESR-2)	WHEN CLOSED ENABLE EMERGENCY STOP RELAY COIL (INDICATING NO EMERGENCY)	A1. FAILS OPEN B1. INTERNAL PART FAILURE	ESR-2 CIRCUIT WILL OPEN CAUSING MOTOR CONTROLLER TO DTECT A FAULT	DELAY IN OPERATION	3
			A2. FAILS CLOSED B2. INTERNAL PART FAILURE	AN OVERHEAT CONDITION OF HOIST MOTOR B WILL GO UNDETECTED BY CONTROLLER. OVERTEMP LAMP WILL STILL FUNCTION AND LOAD CAN STILL BE HELD BY REDUNDANT MOTOR.	NONE. REQUIRES MULTIPLE FAILURES	3

FAILURE MODES AND EFFECTS ANALYSIS (FMEA) WORKSHEET

System: 30 TON BRIDGE CRANE **Program:** SPACE STATION **Facility/Station Set:** SSPF
Subsystem: ELECTRICAL CONTROLS, HOIST
Drawing No.: 101A16061 **Sheet No.:** 1 TO 20 **Page:** 44 of 67 **Date:** 18 March, 2005
PMN: K61-2944 **Baseline:** 580.01 **Prepared by:** W. DiMeo, Boeing

FIND NO. PART NO.	PART NAME	PART FUNCTION	A. FAILURE MODE B. CAUSE C. FMN D. DETECTION METHOD E. CORRECTING ACTION F. TIME TO EFFECT G. TIMEFRAME	FAILURE EFFECT ON SYSTEM PERFORMANCE	FAILURE EFFECT ON FLIGHT HARDWARE AND/OR PERSONNEL SAFETY	CRIT CAT
ULSR2	UPPER LIMIT STOP RELAY COIL	WHEN ENERGIZED ENABLES AC2 RELAY, ENABLES, ENABLE REALY2 COIL AND ENABLES HOIST RAISE RELAY	A1. FAILS OPEN B1. INTERNAL PART FAILURE	HOIST INOPERATIVE	DELAY IN OPERATION	3
	N.O. CONTACTS IN SERIES WITH BPR2 COIL	WHEN CLOSED ENABLES BPR2 RELAY	A1. FAILS OPEN B1. INTERNAL PART FAILURE	UNABLE TO LOWER HOIST BY PRESSING UPPER LIMIT SWITCH	DELAY IN OPERATION	3
			A2. FAILS CLOSED B2. INTERNAL PART FAILURE	BYPASS RELAY BPR2 CONTINUOSLY ENERGIZED	NONE. REQUIRES MULTIPLE FAILURES	3
	N.O. CONTACTS IN SERIES WITH ENABLE RELAY ER2	WHEN CLOSED ENABLES ER2 REALY	A1. FAILS OPEN B1. INTERNAL PART FAILURE	UNABLE RELAY WILL NOT ENERGIZE	DELAY IN OPERATION	3
			A2. FAILS CLOSED B2. INTERNAL PART FAILURE	ENABLE RELAY CONTINUOSLY ENERGIZED	NONE. REQUIRES MULTIPLE FAILURES	3
	N.O. CONTACTS IN SERIES WITH HOIST B RAISE	WHEN CLOSED ENABLES HOIST RAISE RELAY HRR	A1. FAILS OPEN B1. INTERNAL PART FAILURE	HOIST B MOTOR CONTROLLER WILL NOT BE TURNED ON	DELAY IN OPERATION	3
			A2. FAILS CLOSED B2. INTERNAL PART FAILURE	HOIST B DRIVE CONTINUOSLY ON	NONE. REQUIRES MULTIPLE FAILURES	3
	N.O. CONTACTS IN SERIES WITH HOIST B LOWER RELAY (HLR)	WHEN CLOSED ENABLES HOIST B LOWER RELAY	A1. FAILS OPEN B1. INTERNAL PART FAILURE	HOIST B LOWER MODE WILL NOT FUNCTION	DELAY IN OPERATION	3
			A2. FAILS CLOSED B2. INTERNAL PART FAILURE	HOIST B LOWER MODE ENABLED EVEN IF UPPER LIMIT REACHED	NONE. REQUIRES MULTIPLE FAILURES	3

FAILURE MODES AND EFFECTS ANALYSIS (FMEA) WORKSHEET

System: 30 TON BRIDGE CRANE **Program:** SPACE STATION **Facility/Station Set:** SSPF

Subsystem: ELECTRICAL CONTROLS, HOIST

Drawing No.: 101A16061 **Sheet No.:** 1 TO 20 **Page:** 45 **of 67** **Date:** 18 March, 2005

PMN: K61-2944 **Baseline:** 580.01 **Prepared by:** W. DiMeo, Boeing

FIND NO. PART NO.	PART NAME	PART FUNCTION	A. FAILURE MODE B. CAUSE C. FMN D. DETECTION METHOD E. CORRECTING ACTION F. TIME TO EFFECT G. TIMEFRAME	FAILURE EFFECT ON SYSTEM PERFORMANCE	FAILURE EFFECT ON FLIGHT HARDWARE AND/OR PERSONNEL SAFETY	CRIT CAT
MOR2	N.C. COINTACTS IN SERIES WITH OVERTEMP LAMP	WHEN CLOSED ILLUMINATES OVERTEMP LAMP	A1. FAILS OPEN B1. INTERNAL PART FAILURE	AN OVERHEAT CONDITION WILL NOT BE INDICATED BY OVERHEAT LAMP. MOTOR CONTROLLER WILL ACT ON THE OVERHEAT CONDITION.	NONE, REQUIRES MULTIPLE FAILURES	3
MOWR2	MOTOR B OVERTEMP WARNING RELAY COIL	WHEN DE-ENERGIZED, ILLUMINATES MOTOR OVERTEMP WARNING LAMP	A1. FAILS OPEN B1. INTERNAL PART FAILURE	AN OVERTEMP WARNING WILL BE INDICATED BY WARNING LAMP	DELAY IN OPERATION	3
	N.C. CONTACTS IN SERIES WITH OVERTEMP WARNING LAMP	WHEN CLOSED ILLUMINATES OVERTEMP WARNING LAMP, INDICATING MOTOR 2, IS OPERATING ABOVE NORMAL TEMPERATURE	A1. FAILS OPEN B1. INTERNAL PART FAILURE	AN OVERTEMP WARNING WILL NOT BE INDICATED BY WARNING LAMP	NONE. REQUIRES MULTIPLE FAILURES	3
			A2. FAILS CLOSED B2. INTERNAL PART FAILURE	OVERTEMP WARNING LAMP WILL BECONTINUOSLY ILLUMINATED	DELAY IN OPERATIONS	3
MOW601	MOTOR OVERTEMP MODULE	MONITORS OVERTEMP SENSOR	A1. LOW/NO OUTPUT B1. INTERNAL PART FAILURE	MOTOR B OVER HEAT CONDITION MAY GO UNNOTICED, OVER-HEATED MOTOR OR E-STOP WILL HALT OPERAITION	NONE. REQUIRES MULTIPLE FAILURES	3
			A2. HIGH OUTPUT B2. INTERNAL PART FAILURE	FALSE MOTOR B OVERHEAT INDICATION	DELAY IN OPERATIONS	3

FAILURE MODES AND EFFECTS ANALYSIS (FMEA) WORKSHEET

System: 30 TON BRIDGE CRANE **Program:** SPACE STATION **Facility/Station Set:** SSPF

Subsystem: ELECTRICAL CONTROLS, HOIST

Drawing No.: 101A16061 **Sheet No.:** 1 TO 20 **Page:** 46 of 67 **Date:** 18 March, 2005

PMN: K61-2944 **Baseline:** 580.01 **Prepared by:** W. DiMeo, Boeing

FIND NO. PART NO.	PART NAME	PART FUNCTION	A. FAILURE MODE B. CAUSE C. FMN D. DETECTION METHOD E. CORRECTING ACTION F. TIME TO EFFECT G. TIMEFRAME	FAILURE EFFECT ON SYSTEM PERFORMANCE	FAILURE EFFECT ON FLIGHT HARDWARE AND/OR PERSONNEL SAFETY	CRIT CAT
MOW601	MOTOR OVERTEMP WARNING MODULE	MONITORS OVERTEMP WARNING SENSOR	A1. LOW/NO OUTPUT B1. INTERNAL PART FAILURE	MOTOR B OVER HEAT CONDITION MAY GO UNNOTICED, OVER-HEATED MOTOR OR E-STOP WILL HALT OPERAITION	NONE. REQUIRES MULTIPLE FAILURES	3
			A2. HIGH OUTPUT B2. INTERNAL PART FAILURE	FALSE MOTOR B OVERHEAT INDICATION	DELAY IN OPERATIONS	3
NONE	OVERTEMP SENSOR	MONITORS MOTOR B TEMPERATURE	A1. LOW/NO OUTPUT B1. INTERNAL PART FAILURE	MOTOR B OVER HEAT CONDITION MAY GO UNNOTICED, OVER-HEATED MOTOR OR E-STOP WILL HALT OPERAITION	NONE. REQUIRES MULTIPLE FAILURES	3
			A2. HIGH OUTPUT B2. INTERNAL PART FAILURE	FALSE MOTOR B OVERHEAT INDICATION	DELAY IN OPERATIONS	3
NONE	WARNING SENSOR	MONITORS MOTOR B TEMPERATURE	A1. LOW/NO OUTPUT B1. INTERNAL PART FAILURE	MOTOR B OVER HEAT CONDITION MAY GO UNNOTICED, OVER-HEATED MOTOR OR E-STOP WILL HALT OPERAITION	NONE. REQUIRES MULTIPLE FAILURES	3
			A2. HIGH OUTPUT B2. INTERNAL PART FAILURE	FALSE MOTOR B OVERHEAT INDICATION	DELAY IN OPERATIONS	3

FAILURE MODES AND EFFECTS ANALYSIS (FMEA) WORKSHEET

System: 30 TON BRIDGE CRANE **Program:** SPACE STATION **Facility/Station Set:** SSPF

Subsystem: ELECTRICAL CONTROLS, HOIST

Drawing No.: 101A16061 **Sheet No.:** 1 TO 20 **Page:** 47 **of 67** **Date:** 18 March, 2005

PMN: K61-2944 **Baseline:** 580.01 **Prepared by:** W. DiMeo, Boeing

FIND NO. PART NO.	PART NAME	PART FUNCTION	A. FAILURE MODE B. CAUSE C. FMN D. DETECTION METHOD E. CORRECTING ACTION F. TIME TO EFFECT G. TIMEFRAME	FAILURE EFFECT ON SYSTEM PERFORMANCE	FAILURE EFFECT ON FLIGHT HARDWARE AND/OR PERSONNEL SAFETY	CRIT CAT
MBR1	MANUAL BYPASS RELAY N.O. CONTACTS IN PARALLEL WITH ULSR1 (UPPER WEIGHTED LIMIT SWITCH RELAY)	WHEN CLOSED ENABLES UPPER LIMIT SWITCH CONTACTS TO BE BYPASSED WHEN UPPER WEIGHTED LIMIT HAS BEEN REACHED	A1. FAILS OPEN B1. INTERNAL PART FAILURE	UNABLED TO BYPASS UPPER LIMIT SWITCH. HOIST INOPERATIVE.	DELAY IN OPERATIONS	3
			A2. FAILS CLOSED B2. INTERNAL PART FAILURE	UPPER LIMIT SWITCH (ULSR1) CONTACTS CONTINUOSLY BYPASSED.	NONE. REQUIRES MULTIPLE FAILURES	3
ULSR2	UPPER LIMIT STOP RELAY COIL	WHEN ENERGIZED (INDICATING UPPER LIMIT NOT REACHED), ENABLES MOTOR B CIRCUITS.	A1. FAILS OPEN B1. INTERNAL PART FAILURE	MOTOR B INOPERATIVE	DELAY IN OPERATIONS	3
			A2. FAILS CLOSED B2. INTERNAL PART FAILURE	MOTOR B CONTINUOSLY ENABLED, EVEN IF UPPER LIMIT SWITCH IS REACHED. GEARED UPPER LIMIT SWITCH WILL HALT HOIST.	NONE. REQUIRES MULTIPLE FAILURES	3
HRR	HOIST RAISE RELAY N.C. CONTACTS IN SERIES WITH ENABLE RELAY COIL	WHEN CLOSED ENABLES THE MOTOR B ENABLE RELAY CIRCUIT	A1. FAILS OPEN B1. INTERNAL PART FAILURE	CRANE MOTOR B WILL NOT OPERATE.	DELAY IN OPERATIONS	3
			A2. FAILS CLOSED B2. INTERNAL PART FAILURE	MOTOR B ENABLE RELAY CIRCUIT CONTINUOSLY ENABLED.	NONE. REQUIRES MULTIPLE FAILURES	3

FAILURE MODES AND EFFECTS ANALYSIS (FMEA) WORKSHEET

System: 30 TON BRIDGE CRANE **Program:** SPACE STATION **Facility/Station Set:** SSPF

Subsystem: ELECTRICAL CONTROLS, HOIST

Drawing No.: 101A16061 **Sheet No.:** 1 TO 20 **Page:** 48 of 67 **Date:** 18 March, 2005

PMN: K61-2944 **Baseline:** 580.01 **Prepared by:** W. DiMeo, Boeing

FIND NO. PART NO.	PART NAME	PART FUNCTION	A. FAILURE MODE B. CAUSE C. FMN D. DETECTION METHOD E. CORRECTING ACTION F. TIME TO EFFECT G. TIMEFRAME	FAILURE EFFECT ON SYSTEM PERFORMANCE	FAILURE EFFECT ON FLIGHT HARDWARE AND/OR PERSONNEL SAFETY	CRIT CAT
HLR	HOIST LOWER RELAY N.C. CONTACTS IN SERIES WITH ENABLE RELAY COIL	WHEN CLOSED ENABLES THE MOTOR B ENABLE RELAY CIRCUIT	A1. FAILS OPEN B1. INTERNAL PART FAILURE	CRANE MOTOR B WILL NOT OPERATE.	DELAY IN OPERATIONS	3
			A2. FAILS CLOSED B2. INTERNAL PART FAILURE	MOTOR B ENABLE RELAY CIRCUIT CONTINUOSLY ENABLED.	NONE. REQUIRES MULTIPLE FAILURES	3
HRR	N.O. CONTACTS IN SERIES WITH BRAKE CONTACTOR BC2L	WHEN CLOSED ENABLES BRAKE CONTACTOR COIL BC2 CIRCUIT	A1. FAILS OPEN B1. INTERNAL PART FAILURE	BRAKE CONTACTOR WILL NOT OPERATE. HOIST MOTOR B BRAKES WILL NOT BE RELEASED.	DELAY IN OPERATIONS	3
			A2. FAILS CLOSED B2. INTERNAL PART FAILURE	NONE.	DELAY IN OPERATIONS	3
HBR2	HOIST B RELAY N.O. CONTACTS IN SERIES WITH BRAKE CONTACTOR BC2	WHEN CLOSED ENABLES BRAKE CONTACTOR COIL.	A1. FAILS OPEN B1. INTERNAL PART FAILURE	MOTOR B BRAKE CONTACTOR WILL NOT ENERGIZE. HOIST MOTOR B'S BRAKE WILL NOT RELEASE..	DELAY IN OPERATIONS	3
			A2. FAILS CLOSED B2. INTERNAL PART FAILURE	BRAKE CONTACTOR FROM MOTOR B CONTINUOSLY ENABLED. MOTOR CONTROLLER BRAKE FEEDBACK WILL SENSE NO CHANGE IN BRAKE STATE VIA BREAK ACK.	NONE. REQUIRES MULTIPLE FAILURES	3

FAILURE MODES AND EFFECTS ANALYSIS (FMEA) WORKSHEET

System: 30 TON BRIDGE CRANE **Program:** SPACE STATION **Facility/Station Set:** SSPF

Subsystem: ELECTRICAL CONTROLS, HOIST

Drawing No.: 101A16061 **Sheet No.:** 1 TO 20 **Page:** 49 of 67 **Date:** 18 March, 2005

PMN: K61-2944 **Baseline:** 580.01 **Prepared by:** W. DiMeo, Boeing

FIND NO. PART NO.	PART NAME	PART FUNCTION	A. FAILURE MODE B. CAUSE C. FMN D. DETECTION METHOD E. CORRECTING ACTION F. TIME TO EFFECT G. TIMEFRAME	FAILURE EFFECT ON SYSTEM PERFORMANCE	FAILURE EFFECT ON FLIGHT HARDWARE AND/OR PERSONNEL SAFETY	CRIT CAT
LSR2	LOAD SHARE RELAY 2 N.C. CONTACTS IN SERIES WITH BRAKE CONTACTOR BC2	WHEN CLOSED ENABLES THE BRAKE CONTACTOR CIRCUIT	A1. FAILS OPEN B1. INTERNAL PART FAILURE	MOTOR B BRAKE CONTACTOR WILL NOT ENERGIZE. HOIST MOTOR B'S BRAKES WILL NOT RELEASE.	DELAY IN OPERATIONS	3
			A2. FAILS CLOSED B2. INTERNAL PART FAILURE	BRAKE CONTACTOR FOR MOTOR B CONTINUOSLY ENABLED. MOTOR CONTROLLER BRAKE FEEDBACK WILL SENSE NO CHANGE IN BRAKE STATE VIA BREAK ACK.	NONE. REQUIRES MULTIPLE FAILURES	3
BCR2	BRAKE CONTROL RELAY 2 N.O. CONTACTS IN SERIES WITH BRAKE CONTACTOR BC2	WHEN CLOSED (BY MOTOR CONTROLLER) ENABLES BRAKE CONTACTOR COIL CIRCUIT	A1. FAILS OPEN B1. INTERNAL PART FAILURE	MOTOR B BRAKE CONTACTOR WILL NOT ENERGIZE. HOIST MOTOR B'S BRAKES WILL NOT RELEASE.	DELAY IN OPERATIONS	3
			A2. FAILS CLOSED B2. INTERNAL PART FAILURE	BRAKE CONTACTOR FOR MOTOR B CONTINUOSLY ENABLED. MOTOR CONTROLLER BRAKE FEEDBACK WILL SENSE NO CHANGE IN BRAKE STATE VIA BREAK ACK.	NONE. REQUIRES MULTIPLE FAILURES	3

FAILURE MODES AND EFFECTS ANALYSIS (FMEA) WORKSHEET

System: 30 TON BRIDGE CRANE **Program:** SPACE STATION **Facility/Station Set:** SSPF

Subsystem: ELECTRICAL CONTROLS, HOIST

Drawing No.: 101A16061 **Sheet No.:** 1 TO 20 **Page:** 50 of 67 **Date:** 18 March, 2005

PMN: K61-2944 **Baseline:** 580.01 **Prepared by:** W. DiMeo, Boeing

FIND NO. PART NO.	PART NAME	PART FUNCTION	A. FAILURE MODE B. CAUSE C. FMN D. DETECTION METHOD E. CORRECTING ACTION F. TIME TO EFFECT G. TIMEFRAME	FAILURE EFFECT ON SYSTEM PERFORMANCE	FAILURE EFFECT ON FLIGHT HARDWARE AND/OR PERSONNEL SAFETY	CRIT CAT
HLR	HOIST LOWERE RELAY N.O. CONTACTS IN SERIES WITH BC2 BRAKE CONTACTOR	WHEN CLOSED ENABLES BRAKE CONTACTOR FOR HOIST LOWER MODE	A1. FAILS OPEN B1. INTERNAL PART FAILURE	HOIST B MOTOR WILL NOT OPERATE IN LOWER DIRECTION.	DELAY IN OPERATIONS	3
			A2. FAILS CLOSED B2. INTERNAL PART FAILURE	NONE	NONE. REQUIRES MULTIPLE FAILURES	3
BC2	BRAKE CONTACTOR N.O. CONTACTS IN SERIES WITH BRAKE CONTACTOR COIL	WHEN CLOSED PROVIDES LOCKING CIRCUIT FOR BRAKE CONTACTOR	A1. FAILS OPEN B1. INTERNAL PART FAILURE	BRAKE CONTACTOR WILL NOT LOCK IN ON (ENERGIZED CONDITION)	DELAY IN OPERATIONS	3
			A2. FAILS CLOSED B2. INTERNAL PART FAILURE	BRAKE CONTACTOR CONTINUOSLY ENERGIZED (BRAKE REALEASED)	NONE. REQUIRES MULTIPLE FAILURES	3
HRR	HOIST B RAISE COIL	WHEN ENERGIZED TURNS MOTOR B CONTROLLER ON, AND PUTTS MOTOR CONTROLLER INTO RAISE MODE	A1. FAILS OPEN B1. INTERNAL PART FAILURE	MOTOR B WILL NOT OPERATE IN THE RAISE MODE	DELAY IN OPERATIONS	3

FAILURE MODES AND EFFECTS ANALYSIS (FMEA) WORKSHEET

System: 30 TON BRIDGE CRANE **Program:** SPACE STATION **Facility/Station Set:** SSPF

Subsystem: ELECTRICAL CONTROLS, HOIST

Drawing No.: 101A16061 **Sheet No.:** 1 TO 20 **Page:** 51 **of 67** **Date:** 18 March, 2005

PMN: K61-2944 **Baseline:** 580.01 **Prepared by:** W. DiMeo, Boeing

FIND NO. PART NO.	PART NAME	PART FUNCTION	A. FAILURE MODE B. CAUSE C. FMN D. DETECTION METHOD E. CORRECTING ACTION F. TIME TO EFFECT G. TIMEFRAME	FAILURE EFFECT ON SYSTEM PERFORMANCE	FAILURE EFFECT ON FLIGHT HARDWARE AND/OR PERSONNEL SAFETY	CRIT CAT
HRR	NORMALLY OPEN. CONTACTS IN SERIES WITH MOTOR B RAISE INPUT	WHEN CLOSED PROVIDES RAISE COMMAND TO MOTOR B CONTROLLER	A1. FAILS OPEN B1. INTERNAL PART FAILURE	MOTOR B WILL NOT OPERATE IN THE RAISE MODE	DELAY IN OPERATIONS	3
			A2. FAILS CLOSED B2. INTERNAL PART FAILURE	CONTINUOS RAISE COMMAND INPUT TO MOTOR B CONTROLLER	NONE. REQUIRES MULTIPLE FAILURES	3
HRR	NORMALLY OPEN. CONTACTS IN SERIES WITH MOTOR B RAISE INPUT	WHEN CLOSED PROVIDES RAISE COMMAND TO MOTOR B CONTROLLER	A1. FAILS OPEN B1. INTERNAL PART FAILURE	MOTOR B WILL NOT OPERATE IN THE RAISE MODE	DELAY IN OPERATIONS	3
			A2. FAILS CLOSED B2. INTERNAL PART FAILURE	CONTINUOS DRIVE ON COMMAND INPUT TO MOTOR B CONTROLLER	NONE. REQUIRES MULTIPLE FAILURES	3
HLR	HOIST B LOWER RELAY COIL	WHEN CLOSED PROVIDES RAISE COMMAND TO MOTOR B CONTROLLER	A1. FAILS OPEN B1. INTERNAL PART FAILURE	MOTOR B WILL NOT OPERATE IN THE RAISE MODE	DELAY IN OPERATIONS	3

FAILURE MODES AND EFFECTS ANALYSIS (FMEA) WORKSHEET

System: 30 TON BRIDGE CRANE **Program:** SPACE STATION **Facility/Station Set:** SSPF

Subsystem: ELECTRICAL CONTROLS, HOIST

Drawing No.: 101A16061 **Sheet No.:** 1 TO 20 **Page:** 52 **of** 67 **Date:** 18 March, 2005

PMN: K61-2944 **Baseline:** 580.01 **Prepared by:** W. DiMeo, Boeing

FIND NO. PART NO.	PART NAME	PART FUNCTION	A. FAILURE MODE B. CAUSE C. FMN D. DETECTION METHOD E. CORRECTING ACTION F. TIME TO EFFECT G. TIMEFRAME	FAILURE EFFECT ON SYSTEM PERFORMANCE	FAILURE EFFECT ON FLIGHT HARDWARE AND/OR PERSONNEL SAFETY	CRIT CAT
HLR	NORMALLY OPEN. CONTACTS IN SERIES WITH MOTOR B RAISE INPUT	WHEN CLOSED PROVIDES RAISE COMMAND TO MOTOR B CONTROLLER	A1. FAILS OPEN B1. INTERNAL PART FAILURE	MOTOR B WILL NOT OPERATE IN THE RAISE MODE	DELAY IN OPERATIONS	3
			A2. FAILS CLOSED B2. INTERNAL PART FAILURE	CONTINUOS LOWER COMMAND INPUT TO MOTOR B CONTROLLER	NONE. REQUIRES MULTIPLE FAILURES	3
	NORMALLY OPEN. CONTACTS IN SERIES WITH MOTOR CONTROLLER B DRIVE ON INPUT	WHEN CLOSED PROVIDES DRIVE ON COMMAND TO MOTOR B CONTROLLER	A1. FAILS OPEN B1. INTERNAL PART FAILURE	MOTOR B WILL NOT OPERATE IN THE LOWER MODE	DELAY IN OPERATIONS	3
			A2. FAILS CLOSED B2. INTERNAL PART FAILURE	CONTINUOS DRIVE ON COMMAND TO MOTOR B CONTROLLER	NONE. REQUIRES MULTIPLE FAILURES	3
HBR2	HOIST B RELAY COIL	WHEN ENERGIZED, PROVIDES APTH FOR EMERGENCY STOP RELAY COIL	A1. FAILS OPEN B1. INTERNAL PART FAILURE	EMERGENCY STOP RELAY WILL NOT ENERGIZE, WHICH WILL CIVE FALSE ABNORMALITY	DELAY IN OPERATIONS	3

FAILURE MODES AND EFFECTS ANALYSIS (FMEA) WORKSHEET

System: 30 TON BRIDGE CRANE **Program:** SPACE STATION **Facility/Station Set:** SSPF

Subsystem: ELECTRICAL CONTROLS, HOIST

Drawing No.: 101A16061 **Sheet No.:** 1 TO 20 **Page:** 53 **of** 67 **Date:** 18 March, 2005

PMN: K61-2944 **Baseline:** 580.01 **Prepared by:** W. DiMeo, Boeing

FIND NO. PART NO.	PART NAME	PART FUNCTION	A. FAILURE MODE B. CAUSE C. FMN D. DETECTION METHOD E. CORRECTING ACTION F. TIME TO EFFECT G. TIMEFRAME	FAILURE EFFECT ON SYSTEM PERFORMANCE	FAILURE EFFECT ON FLIGHT HARDWARE AND/OR PERSONNEL SAFETY	CRIT CAT
HBR2	N.O CONTACTS IN SERIES WITH ESR2	WHEN CLOSED ENABLES EMERGENCY STOP RELAY CIRCUIT WITH OUT MOTOR A CONTACTOR BEING ENERGIZED	A1. FAILS OPEN B1. INTERNAL PART FAILURE	UNABLE TO OPERATE HOIST ON MOTOR B ONLY	DELAY IN OPERATIONS	3
			A2. FAILS CLOSED B2. INTERNAL PART FAILURE	ABILITY TO OPERATE HOIST WITH MOTOR B ONLY	NONE. REQUIRES MULTIPLE FAILURES	3
HBRA	HOIST A AUXILIARY RELAY COIL	WHEN ENERGIZED, ENABLES HOIST B SPEED INDICATOR, AND HOIST POSITION INDICATOR	A1. FAILS OPEN B1. INTERNAL PART FAILURE	HOIST B (MOTOR B) SPEED AND POSITION WILL NOT BE INDICATED	NONE. REQUIRES MULTIPLE FAILURES	3
	N.O CONTACTS (2 SETS) IN SERIES WITH DAC1 AND GROUND INPUTS TO MOTOR CONTROLLER	WHEN CLOSED ENABLES HOIST A SPEED INDICATOR	A1. FAILS OPEN B1. INTERNAL PART FAILURE	HOIST A (MOTOR A) SPEED WILL NOT BE INDIACTED	DELAY IN OPERATIONS	3
			A2. FAILS CLOSED B2. INTERNAL PART FAILURE	ERRONEOUS MOTOR B SPEED INDICATION	DELAY IN OPERATION	3
HBRA	N.O CONTACTS (2 SETS) IN SERIES WITH DAC1 AND GROUND INPUTS TO MOTOR CONTROLLER	WHEN CLOSED ENABLES HOIST A POSITION INDICATOR	A1. FAILS OPEN B1. INTERNAL PART FAILURE	HOIST A (MOTOR A) POSITION WILL NOT BE INDIACTED	DELAY IN OPERATIONS	3

FAILURE MODES AND EFFECTS ANALYSIS (FMEA) WORKSHEET

System: 30 TON BRIDGE CRANE **Program:** SPACE STATION **Facility/Station Set:** SSPF

Subsystem: ELECTRICAL CONTROLS, HOIST

Drawing No.: 101A16061 **Sheet No.:** 1 TO 20 **Page:** 54 of 67 **Date:** 18 March, 2005

PMN: K61-2944 **Baseline:** 580.01 **Prepared by:** W. DiMeo, Boeing

FIND NO. PART NO.	PART NAME	PART FUNCTION	A. FAILURE MODE B. CAUSE C. FMN D. DETECTION METHOD E. CORRECTING ACTION F. TIME TO EFFECT G. TIMEFRAME	FAILURE EFFECT ON SYSTEM PERFORMANCE	FAILURE EFFECT ON FLIGHT HARDWARE AND/OR PERSONNEL SAFETY	CRIT CAT
HBRB	HOIST B AUXILIARY RELAY COIL	WHEN ENERGIZED ENABLES +VDC LINE FROM MOTOR B CONTROLLER RELAY BOARD TO HOIST SPEED AND FLOAT SPEED CONTROLS	A1. FAILS OPEN B1. INTERNAL PART FAILURE	NO VOLTAGE ON HOIST SPEED AND FLOAT CONTROLS. HOIST INOPERATIVE	DELAY IN OPERATIONS	3
	N.O CONTACTS IN SERIES WITH +VDC LINE OF MOTOR CONTROLLER B RELAY BOARD	WHEN CLOSED PLACES +VDC FROM MOTOR CONTROLLER ON HOIST SPEED AND FLOAT SPEED INDICATORS	A1. FAILS OPEN B1. INTERNAL PART FAILURE	NO VOLTAGE ON HOIST SPEED AND FLOAT CONTROLS. HOIST INOPERATIVE	DELAY IN OPERATIONS	3
			A2. FAILS CLOSED B2. INTERNAL PART FAILURE	CONSTANT +VDC ON HOIST SPEED AND FLOAT SPEED POTENTIOMETER	DELAY IN OPERATION	3
LSR2	LOAD SHARE RELAY 2 COIL	WHEN ENERGIZED, NABLES BRAKE CONTACTOR CIRCUIT, ENABLES LOAD SHARE INPUT TO HOIST B CONTROLLER	A1. FAILS OPEN B1. INTERNAL PART FAILURE	BRAKE COIL BC2 (RELEASING BRAKE FOR MOTOR B) WILL BE ENABLED ALONG WITH BC1 FOR MOTOR A. HOIST B CONTROLLER WILL NOT ENTER SLAVE MODE	DELAY IN OPERATIONS	3

FAILURE MODES AND EFFECTS ANALYSIS (FMEA) WORKSHEET

System: 30 TON BRIDGE CRANE **Program:** SPACE STATION **Facility/Station Set:** SSPF
Subsystem: ELECTRICAL CONTROLS, HOIST
Drawing No.: 101A16061 **Sheet No.:** 1 TO 20 **Page:** 55 of 67 **Date:** 18 March, 2005
PMN: K61-2944 **Baseline:** 580.01 **Prepared by:** W. DiMeo, Boeing

FIND NO. PART NO.	PART NAME	PART FUNCTION	A. FAILURE MODE B. CAUSE C. FMN D. DETECTION METHOD E. CORRECTING ACTION F. TIME TO EFFECT G. TIMEFRAME	FAILURE EFFECT ON SYSTEM PERFORMANCE	FAILURE EFFECT ON FLIGHT HARDWARE AND/OR PERSONNEL SAFETY	CRIT CAT
LSR2	N.C CONTACTS IN SERIES WITH BC2	WHEN OPEN ((IN LOAD SHARE MODE) DISABLES HOIST B BRAKE CONTACTOR	A1. FAILS OPEN B1. INTERNAL PART FAILURE	HOIST B BRAKE CONTACTOR (BC2) WILL ALWAYS BE DISABLED	DELAY IN OPERATIONS	3
			A2. FAILS CLOSED B2. INTERNAL PART FAILURE	HOIST B BRAKE CONTACTOR WILL ALWAYS BE ENABLED. EVEN IN LOAD SHARE MODE	NONE. REQUIRES MULTIPLE FAILURES	3
	N.O CONTACTS IN SERIES WITH HOIST B CONTROLLER LOAD SHARE INPUT	WHEN CLOSED PUTS HOIST B CONTROLLER IN SLAVE MODE TO HOIST A CONTROLLER	A1. FAILS OPEN B1. INTERNAL PART FAILURE	HOIST B WILL NOT BECOME SLAVE FOR HOIST A IN LOAD SHARE MODE	DELAY IN OPERATIONS	3
LSR2A	LOAD SHARE 2 AUXIIARY COIL	WHEN ENERGIZED, DISABLES HOIST SPEED AND POSITION INDICATORS, WHEN IN LOAD SHARE MODE	A1. FAILS OPEN B1. INTERNAL PART FAILURE	HOIST B SPEED AND DIRECTION INDICATORS WILL REMAIN ACTIVE DURING LOAD SHARE MODE. RESULTING IN INACCURATE SPEED INDICATION	NONE. REQUIRES MULTIPLE FAILURES	3
	N.C CONTACTS (2 SETS) IN SERIES WITH 5 VOLT ENCODER LINES FROM MOTOR B CONTROLLER	WHEN CLOSED ENABLES 5 VOLT ENCODER SIGNAL TO HOIST DIRECTION INDICATOR	A1. FAILS OPEN B1. INTERNAL PART FAILURE	HOIST B DIRECTION WILL NOT BE INDICATED	NONE. REQUIRES MULTIPLE FAILURES	3
			A2. FAILS CLOSED B2. INTERNAL PARTS FAILURE	HOIST B DIRECTION WILLNOT BE DISABLED AS IT SHOULD WHEN LOAD SHARE MODE SELECTED	NONE. REQUIRES MULTIPE FAILIURES	3

FAILURE MODES AND EFFECTS ANALYSIS (FMEA) WORKSHEET

System: 30 TON BRIDGE CRANE **Program:** SPACE STATION **Facility/Station Set:** SSPF

Subsystem: ELECTRICAL CONTROLS, HOIST

Drawing No.: 101A16061 **Sheet No.:** 1 TO 20 **Page:** 56 of 67 **Date:** 18 March, 2005

PMN: K61-2944 **Baseline:** 580.01 **Prepared by:** W. DiMeo, Boeing

FIND NO. PART NO.	PART NAME	PART FUNCTION	A. FAILURE MODE B. CAUSE C. FMN D. DETECTION METHOD E. CORRECTING ACTION F. TIME TO EFFECT G. TIMEFRAME	FAILURE EFFECT ON SYSTEM PERFORMANCE	FAILURE EFFECT ON FLIGHT HARDWARE AND/OR PERSONNEL SAFETY	CRIT CAT
LSR2	N.C CONTACTS IN SERIES WITH BC2	WHEN OPEN ((IN LOAD SHARE MODE) DISABLES HOIST B BRAKE CONTACTOR	A1. FAILS OPEN B1. INTERNAL PART FAILURE	HOIST B BRAKE CONTACTOR (BC2) WILL ALWAYS BE DISABLED	DELAY IN OPERATIONS	3
			A2. FAILS CLOSED B2. INTERNAL PART FAILURE	HOIST B BRAKE CONTACTOR WILL ALWAYS BE ENABLED. EVEN IN LOAD SHARE MODE	NONE. REQUIRES MULTIPLE FAILURES	3
	N.O CONTACTS IN SERIES WITH HOIST B CONTROLLER LOAD SHARE INPUT	WHEN CLOSED PUTS HOIST B CONTROLLER IN SLAVE MODE TO HOIST A CONTROLLER	A1. FAILS OPEN B1. INTERNAL PART FAILURE	HOIST B WILL NOT BECOME SLAVE FOR HOIST A IN LOAD SHARE MODE	DELAY IN OPERATIONS	3
LSR2A	LOAD SHARE 2 AUXIIARY COIL	WHEN ENERGIZED, DISABLES HOIST SPEED AND POSITION INDICATORS, WHEN IN LOAD SHARE MODE	A1. FAILS OPEN B1. INTERNAL PART FAILURE	HOIST B SPEED AND DIRECTION INDICATORS WILL REMAIN ACTIVE DURING LOAD SHARE MODE. RESULTING IN INACCURATE SPEED INDICATION	NONE. REQUIRES MULTIPLE FAILURES	3
	N.C CONTACTS (2 SETS) IN SERIES WITH 5 VOLT ENCODER LINES FROM MOTOR B CONTROLLER	WHEN CLOSED ENABLES 5 VOLT ENCODER SIGNAL TO HOIST DIRECTION INDICATOR	A1. FAILS OPEN B1. INTERNAL PART FAILURE	HOIST B DIRECTION WILL NOT BE INDICATED	NONE. REQUIRES MULTIPLE FAILURES	3
			A2. FAILS CLOSED B2. INTERNAL PARTS FAILURE	HOIST B DIRECTION WILLNOT BE DISABLED AS IT SHOULD WHEN LOAD SHARE MODE SELECTED	NONE. REQUIRES MULTIPE FAILIURES	3

FAILURE MODES AND EFFECTS ANALYSIS (FMEA) WORKSHEET

System: 30 TON BRIDGE CRANE **Program:** SPACE STATION **Facility/Station Set:** SSPF

Subsystem: REMOTE E-STOPS

Drawing No.: 82K04854 **Sheet No.:** 1 TO 20 **Page:** 1 of 2 **Date:** JULY 24, 1996

PMN: K61-2944 **Baseline:** 580.01 **Prepared by:** W. DiMeo, Boeing

FIND NO. PART NO.	PART NAME	PART FUNCTION	A. FAILURE MODE B. CAUSE C. FMN D. DETECTION METHOD E. CORRECTING ACTION F. TIME TO EFFECT G. TIMEFRAME	FAILURE EFFECT ON SYSTEM PERFORMANCE	FAILURE EFFECT ON FLIGHT HARDWARE AND/OR PERSONNEL SAFETY	CRIT CAT
RELAYS K3, K4, K5 **COILS**	ONE EACH RELAY FOR EACH INCOMING 3 PHASE LINE TO CRANE	WHEN ENERGIZED THESE RELAY'S CONTACTS ENABLE THE 24VDC SUPPLY INPUT	A1. FAILS OPEN (ANY ONE) B1. INTERNAL PART FAILURE	LOSS OF INPUT POWER TO 24VDC SUPPLY USED TO ACTIVATE SHUNT TRIP COILS.	NONE. REQUIRES MULTIPLE FAILURES	3
RELAYS K3, K4, K5 N.O. CONTACTS		WHEN CLOSED THESE CONTACTS ENABLE THE 24VDC SUPPLY INPUT POWER	A1. FAILS OPEN (ANY ONE) B1. INTERNAL PART FAILURE	LOSS OF INPUT POWER TO 24VDC SUPPLY USED TO ACTIVATE SHUNT TRIP COILS.	NONE. REQUIRES MULTIPLE FAILURES	3
			A2. FAILS CLOSED (ANY ONE) B2. INTERNAL PART FAILURE	24 VDC POWER SUPPLY COSTANTLY ENABLED	NONE. REQUIRES MULTIPLE FAILURES	3
RELAYS K1, K2 COILS	TWO RELAYS ARE IN PARALLEL AT OUTPUT OF 24VDC TO E-STOP	WHEN CLOSED THE CONTACTS PROVIDE PATH FOR 24VDC TO E-STOP	A1. FAILS OPEN B1. INTERNAL PART FAILURE	LOSS OF 24VDC TO E-STOP. E-STOPS AT WORK STANDS INOPERATIVE. E-STOPS ON THE WALL AND CRANE OPERATORS STATIONS WILL OPERATE. ALSO BOTH K1 AND K2 WOULD HAVE TO FAIL OPEN FOR LOSS OF WORKSTAND E-STOPS.	NONE. REQUIRES MULTIPLE FAILURES	3
RELAYS **K1, K2** **N.O.** **CONTACTS**		WHEN CLOSED 24VDC IS SUPPLIED TO E-STOP	A1. FAILS OPEN B1. INTERNAL PART FAILURE	LOSS OF 24VDC TO E-STOP. E-STOPS AT WORK STANDS INOPERATIVE. E-STOPS ON THE WALL AND CRANE OPERATORS STATIONS WILL OPERATE. ALSO BOTH K1 AND K2 WOULD HAVE TO FAIL OPEN FOR LOSS OF WORKSTAND E-STOPS.	NONE. REQUIRES MULTIPLE FAILURES	3

FAILURE MODES AND EFFECTS ANALYSIS (FMEA) WORKSHEET

System: 30 TON BRIDGE CRANE **Program:** SPACE STATION **Facility/Station Set:** SSPF

Subsystem: REMOTE E-STOPS

Drawing No.: 82K04854 **Sheet No.:** 1 TO 20 **Page:** 2 of 2 **Date:** JULY 24, 1996

PMN: K61-2944 **Baseline:** 580.01 **Prepared by:** W. DiMeo, Boeing

FIND NO. PART NO.	PART NAME	PART FUNCTION	A. FAILURE MODE B. CAUSE C. FMN D. DETECTION METHOD E. CORRECTING ACTION F. TIME TO EFFECT G. TIMEFRAME	FAILURE EFFECT ON SYSTEM PERFORMANCE	FAILURE EFFECT ON FLIGHT HARDWARE AND/OR PERSONNEL SAFETY	CRIT CAT
CR1, CR2	DIODES ACROSS THE COILS OF K1, K2	PREVENT REVERSE EMF FROM SLOWING RELAY RESPONSE TIME AND/OR CONTACT CHATTER	A1. FAILS OPEN B1. INTERNAL PART FAILURE	POSSIBLE REDUCED LIFE OF RELAY AND INTERMITTEN OPERATION. UNAFFECTED (PARRALLEL) RELAY WILL STILL FUNCTION.	NONE. REQUIRES MULTIPLE FAILURES	3
			A2. FAILS SHORTED B2. INTERNAL PART FAILURE	NIETHER K1 OR K2 WILL FUNCTION. LOSS OF WORKSTAND E-STOPS, WALL E-STOPS AND CRANE CONTROL E-STOPS WILL STILL FUNCTION.	NONE. REQUIRES MULTIPLE FAILURES	3
PS1	24VDC POWER SUPPLY	SUPPLIES VOLTAGE TO OPERATE SHUNT TRIP RELAY CONTACTS OF K1 AND K2 VIA E-STOP.	A1. FAILS TO OPERATE B1. INTERNAL PART FAILURE	NIETHER K1 OR K2 WILL FUNCTION. LOSS OF WORKSTAND E-STOPS, WALL E-STOPS AND CRANE CONTROL E-STOPS WILL STILL FUNCTION.	NONE. REQUIRES MULTIPLE FAILURES	3

FAILURE MODES AND EFFECTS ANALYSIS (FMEA) WORKSHEET

System: 30 TON BRIDGE CRANE **Program:** SPACE STATION **Facility/Station Set:** SSPF

Subsystem: ELECTRICAL CONTROLS, HOIST

Drawing No.: 101A16061 **Sheet No.:** 1 TO 20 **Page:** 59 **of** 156 **Date:** 18 March, 2005

PMN: K61-2944 **Baseline:** 580.01 **Prepared by:** W. DiMeo, Boeing

FIND NO. PART NO.	PART NAME	PART FUNCTION	A. FAILURE MODE B. CAUSE C. FMN D. DETECTION METHOD E. CORRECTING ACTION F. TIME TO EFFECT G. TIMEFRAME	FAILURE EFFECT ON SYSTEM PERFORMANCE	FAILURE EFFECT ON FLIGHT HARDWARE AND/OR PERSONNEL SAFETY	CRIT CAT
LSR2A	N.C CONTACTS IN (2 SETS) IN SERIES WITH MOTOR B CONTROLLER HOIST SPEED INDICATOR	WHEN CLOSED PROVIDES HOIST B SPEED INDICATOR	A1. FAILS OPEN B1. INTERNAL PART FAILURE	HOIST B SPEED WILL NOT BE INDICATED	NONE. REQUIRES MULTIPLE FAILURES	3
	N.O CONTACTS IN SERIES WITH HOIST B CONTROLLER LOAD SHARE INPUT	WHEN CLOSED PUTS HOIST B CONTROLLER IN SLAVE MODE TO HOIST A CONTROLLER	A1. FAILS OPEN B1. INTERNAL PART FAILURE	HOIST B WILL NOT BECOME SLAVE FOR HOIST A IN LOAD SHARE MODE	DELAY IN OPERATIONS	3
LSR2A	LOAD SHARE 2 AUXILIARYY RELAY COIL	WHEN ENERGIZED, DISABLES HOIST SPEED AND POSITION INDICATORS, WHEN IN LOAD SHARE MODE	A1. FAILS OPEN B1. INTERNAL PART FAILURE	HOIST B SPEED AND DIRECTIOON INDICATORS WILL REMAIN ACTIVE DURING LOAD SHARE MODE. RESULTING IN INACCURATE SPEED INDICATION	NONE. REQUIRES MULTIPLE FAILURES	3
LSR2B	LOAD SHARE AUXILIARYY RELAY COIL	WHEN ENERGIZED, DISABLES +VDC LINE TO SPEED AND FLOAT SPEED INDICATORS FOR HOIST B	A1. FAILS OPEN B1. INTERNAL PART FAILURE	INCORRECT SPEED INDICATION WHEN IN LOAD SHARE MODE	REQUIRES MULTIPLE FAILURES	3
LSR2B	N.C CONTACTS IN SERIES WITH +VDC LINE MOTOR CONTROLLER B RELAY BOARD	WHEN CLOSED ENABLES +VDC LINE TO HOIST SPEED AND FLOAT SPEED INDICATORS	A1. FAILS OPEN B1. INTERNAL PART FAILURE A2. FAILS CLOSED B2. INTERNAL PARTS FAILURE	INCORRECT SPEED INDICATION WHEN IN LOAD SHARE MODE INCORRECT SPEED INDICATION WHEN IN LOAD SHARE MODE	REQUIRES MULTIPLE FAILURES REUIRES MULTIPLE FAILURES	3 3

FAILURE MODES AND EFFECTS ANALYSIS (FMEA) WORKSHEET

System: 30 TON BRIDGE CRANE **Program:** SPACE STATION **Facility/Station Set:** SSPF

Subsystem: ELECTRICAL CONTROLS, HOIST

Drawing No.: 101A16061 **Sheet No.:** 1 TO 20 **Page:** 60 of 156 **Date:** 18 March, 2005

PMN: K61-2944 **Baseline:** 580.01 **Prepared by:** W. DiMeo, Boeing

FIND NO. PART NO.	PART NAME	PART FUNCTION	A. FAILURE MODE B. CAUSE C. FMN D. DETECTION METHOD E. CORRECTING ACTION F. TIME TO EFFECT G. TIMEFRAME	FAILURE EFFECT ON SYSTEM PERFORMANCE	FAILURE EFFECT ON FLIGHT HARDWARE AND/OR PERSONNEL SAFETY	CRIT CAT
NONE	DOOR SWITCH NORMALLY CLOSED	WHEN CLOSED PROVIDES PATH FOR POWER TO ENCLOSURE FLOURESCENT LAMP	A1. FAILS OPEN B1. INTERNAL PART FAILURE	FLOURESCENT LAMP WILL NOT ILLUMINATE	NONE	3
			A2. FAILS CLOSED B2. INTERNAL PART FAILURE	FLOURESCENT LAMP WILL BE CONTINUOSLY ILLUMINATED	NONE	3
NONE	ENCLOSURE FLOURESCENT LAMP	PROVIDES LIGHT TO INTERIOROF CONTROL CABINET FOR SERVICE PERSONNEL	A1. FAILS OPEN B1. INTERNAL PART FAILURE	INTERIOR OF CABINET WILL BE TO DARK FOR SERVICE PERSONNEL	DELAY IN NECESSARY REPAIRS	3
HR	HOIST MASTER SWITCH N.O. RAISE CONTACTS	WHEN CLOSED ENABLES HOIST RAISE RELAY 2 (HRR2)	A1. FAILS OPEN B1. INTERNAL PART FAILURE	IHOIST WILL NOT OPERATE IN RAISE MODE	DELAY IN OPERATION	3
			A2. FAILS CLOSED B2. INTERNAL PART FAILURE	HOIST WILL BE CONTINUOSLY ENERGIZED IN THE RAISE MODE	NONE. REQUIRES MULTIPLE FAILURES	3
NONE	UPPER GEARED LIMIT SWITCH	WHEN CLOSED (HOIST NOT AT UPPER LIMIT) ENABLES HOIST RAISE RELAYS HRR2 AND HRR1	A1. FAILS OPEN B1. INTERNAL PART FAILURE	HOIST WILL NOT OPERATE IN RAISE MODE, WITH HTS ENABLED	DELAY IN NECESSARY REPAIRS	3
			A2. FAILS CLOSED B2. INTERNAL PART FAILURE	HOIST WILL NOT STOP WHEN UPPER LIMIT IS REACHED. WEIGHTED UPPER LIMIT SWITCH WILL STOP HOIST	NONE. REQUIRES MULTIPLE FAILURES	3
HRR2	HOIST RAISE RELAY 2 COIL	WHEN ENERGIZED LOCKS OUT HOIST LOWER RELAY 2 AND ENABLES HOIST B RAISE RELAY	A1. FAILS OPEN B1. INTERNAL PART FAILURE	HOIST WILL NOT OPERATE IN RAISE MODE	DELAY IN OPERATION	3

FAILURE MODES AND EFFECTS ANALYSIS (FMEA) WORKSHEET

System: 30 TON BRIDGE CRANE **Program:** SPACE STATION **Facility/Station Set:** SSPF

Subsystem: ELECTRICAL CONTROLS, HOIST

Drawing No.: 101A16061 **Sheet No.:** 1 TO 20 **Page:** 61 of 156 **Date:** 18 March, 2005

PMN: K61-2944 **Baseline:** 580.01 **Prepared by:** W. DiMeo, Boeing

FIND NO. PART NO.	PART NAME	PART FUNCTION	A. FAILURE MODE B. CAUSE C. FMN D. DETECTION METHOD E. CORRECTING ACTION F. TIME TO EFFECT G. TIMEFRAME	FAILURE EFFECT ON SYSTEM PERFORMANCE	FAILURE EFFECT ON FLIGHT HARDWARE AND/OR PERSONNEL SAFETY	CRIT CAT
NONE	N.C. CONTACTS IN SERIES WITH HLR2 RELAY	WHEN CLOSED ENABLES HOIST LOWER RELAY2	A1. FAILS OPEN B1. INTERNAL PART FAILURE	HOIST WILL NOT OPERATE IN LOWER MODE	DELAY IN NECESSARY REPAIRS	3
			A2. FAILS CLOSED B2. INTERNAL PART FAILURE	HOIST LOWER RELSY 2 HLR2, CONSTANTLY ENABLED	NONE. REQUIRES MULTIPLE FAILURES	3
	N.O. CONTACTS IN SERIES WITH HOIST B RAISE REALY	WHEN CLOSED ENABLES HOIST B RAISE RELAY COIL	A1. FAILS OPEN B1. INTERNAL PART FAILURE	HOIST WILL NOT OPERATE IN RAISE MODE	DELAY IN NECESSARY REPAIRS	3
			A2. FAILS CLOSED B2. INTERNAL PART FAILURE	HOIST B RAISE RELAY CONSTANTLY ENABLED	NONE. REQUIRES MULTIPLE FAILURES	3
HRR1	HOIST RAISE RELAY 1 COIL	WHEN ENERGIZED, TURNS ON HOIST DRIVE AND INPUTSRAISE SIGNAL TO HOIST CONTROLLER, INHIBITS LOWER RELAY, ENABLES THE ENABLERELAY AND BRAKE CONTACTOR	A1. FAILS OPEN B1. INTERNAL PART FAILURE	HOIST WILL NOT OPERATE IN RAISE MODE	DELAY IN OPERATION	3
	N.O. CONTACTS IN SERIES WITH MOTOR CONTROLLER A RAISE INPUT	WHEN CLOSED ACTIVATES MOTOR B CONTROLLER RAISE LINE.	A1. FAILS OPEN B1. INTERNAL PART FAILURE	HOIST MOTOR B WILL NOT FUNCTION, WHEN RAISE MODE IS SELECTED, HOWEVER HOIST MOTOR A WILL BW. HOIST IS DESIGNED SO THAT ONE MOTOR IS CAPABLE OF HOLDING LOAD. MOTOR IMBALANCE LAMP WILL NOT ILLUMINATE	NONE. REQUIRES MULTIPLE FAILURES	3
			A2. FAILS CLOSED B2. INTERNAL PART FAILURE	MOTOR CONTROLLER RAISE INPUT WILL BE CONSTANTLY ON	NONE. REQUIRES MULTIPLE FAILURES	3

FAILURE MODES AND EFFECTS ANALYSIS (FMEA) WORKSHEET

System: 30 TON BRIDGE CRANE **Program:** SPACE STATION **Facility/Station Set:** SSPF

Subsystem: ELECTRICAL CONTROLS, HOIST

Drawing No.: 101A16061 **Sheet No.:** 1 TO 20 **Page:** 62 **of** 156 **Date:** 18 March, 2005

PMN: K61-2944 **Baseline:** 580.01 **Prepared by:** W. DiMeo, Boeing

FIND NO. PART NO.	PART NAME	PART FUNCTION	A. FAILURE MODE B. CAUSE C. FMN D. DETECTION METHOD E. CORRECTING ACTION F. TIME TO EFFECT G. TIMEFRAME	FAILURE EFFECT ON SYSTEM PERFORMANCE	FAILURE EFFECT ON FLIGHT HARDWARE AND/OR PERSONNEL SAFETY	CRIT CAT
HRR1	N.O. CONTACTS IN SERIES WITH MOTOR CONTROLLER A (DRIVE ON INPUT)	WHEN CLOSED TURNS MOTOR CONTROLLER A ON	A1. FAILS OPEN B1. INTERNAL PART FAILURE	HOIST MOTOR A WILL NOT OPERATE. HOIST MOTOR B WILL HOWEVER	NONE. REQUIRES MULTIPLE FAILURES	3
			A2. FAILS CLOSED B2. INTERNAL PART FAILURE	HOIST MOTOR CONTROLLER A WILL HAVE RAISE AND DRIVE ON SIGNAL LINES CONTINUOSLY ACTIVE	NONE. REQUIRES MULTIPLE FAILURES	3
HRR1	N.C. CONTACTS IN SERIES WITH ER1 (ENABLE RELAY)	WHEN CLOSED ENABLES THE ENABLE RELAY FOR HOIST MOTOR A CONTROLLER	A1. FAILS OPEN B1. INTERNAL PART FAILURE	HOIST INOPERATIVE	DELAY IN OPERATION	3
			A.2 FAILS CLOSED B2. INTERNAL PART FAILURE	CONTINUOS ENABLE INPUT RO HOIST MOTOR A CONTROLLER	NONE. REQUIRES DOUBLE FAILURE	3
	N.O. CONTACTS IN SERIES WITH BC1, BRAKE CONTACTOR		A1. FAILS OPEN B1. INTERNAL PART FAILURE	BRAKE FOR HOIST MOTOT A WILL NOT RELEASE. FOR RAISE OPERATION	DELAY IN OPERATION	3
			A2. FAILS CLOSED B2. INTERNAL PART FAILURE	NONE	NONE. REQUIRES MULTIPLE FAILURES	3
HLR2	HOIST LOWER RELAY 2 COIL	WHEN ENERGIZED, DISABLES HOIST RAISE RELAY 2 (HRR2) AND ENABLES HOIST B LOWER RELAY (HLR)	A1. FAILS OPEN B1. INTERNAL PART FAILURE	HOIST WILL NOT OPERATE IN LOWER MODE	DELAY IN OPERATION	3

FAILURE MODES AND EFFECTS ANALYSIS (FMEA) WORKSHEET

System: 30 TON BRIDGE CRANE **Program:** SPACE STATION **Facility/Station Set:** SSPF

Subsystem: ELECTRICAL CONTROLS, HOIST

Drawing No.: 101A16061 **Sheet No.:** 1 TO 20 **Page:** 63 **of 156** **Date:** 18 March, 2005

PMN: K61-2944 **Baseline:** 580.01 **Prepared by:** W. DiMeo, Boeing

FIND NO. PART NO.	PART NAME	PART FUNCTION	A. FAILURE MODE B. CAUSE C. FMN D. DETECTION METHOD E. CORRECTING ACTION F. TIME TO EFFECT G. TIMEFRAME	FAILURE EFFECT ON SYSTEM PERFORMANCE	FAILURE EFFECT ON FLIGHT HARDWARE AND/OR PERSONNEL SAFETY	CRIT CAT
HLR2	N.O. CONTACTS IN SERIES WITH HOIST RAISE RELAY 2 (HRR2)	WHEN CLOSED ENABLES HOIST RAISE RELAY 2	A1. FAILS OPEN B1. INTERNAL PART FAILURE	HOIST MOTOR B WILL NOT OPERATE	DELAY IN OPERATIONS	3
			A2. FAILS CLOSED B2. INTERNAL PART FAILURE	NONE. HBR CONTACTS WOULD ALSO HAVE TO FAIL CLOSED	NONE. REQUIRES MULTIPLE FAILURES	3
HLR2	N.O. CONTACTS IN SERIES WITH HOIST LOWER RELAY 2 (HLR2)	WHEN CLOSED ENABLES HOIST B LOWER RELAY COIL CIRCUIT	A1. FAILS OPEN B1. INTERNAL PART FAILURE	HOIST MOTOR WILL NOT FUNCTION IN LOWER MODE. HOIST MOTOR A WILL FUNCTION IN LOWER MODEE	NONE. REQUIRES MULTIPLE FAILURES	3
			A2. FAILS CLOSED B2. INTERNAL PART FAILURE	HOIST B LOWER RELAY (HLR) CONTINUOSLY ENERGIZED. HOIST MOTOR A WILL NOT OPERATE IN LOWER MODE	NONE. REQUIRES MULTIPLE FAILURES	3
HLR1	HOIST LOWER RELAY 1 COIL	WHEN ENERGIZED, TURNS HOIST MOTOR ON AND ENABLES LOWER MODE FOR MOTOR A. PROVIDES PATH FOR ENABLE RELAY, AND ENABLES BRAKE CONTACTOR FOR MOTORA	A1. FAILS OPEN B1. INTERNAL PART FAILURE	HOIST MOTOR A, WILL NOT OPERATE IN LOWER MODE	DELAY IN OPERATION	3
		N.O. CONTACTS IN SERIES WITH MOTOR CONTROLLER DRIVE INPUT	A1. FAILS OPEN B1. INTERNAL PART FAILURE	MOTOR A WILL NOT OPERATE IN LOWER MODE	DELAY IN OPERATIONS	3
			A2. FAILS CLOSED B2. INTERNAL PART FAILURE	MOTOR A WILL NOT OPERATE IN LOWER MODE	DELAY IN OPERATION	3
		N.O. CONTACTS IN SERIES WITH LOWER INPUT TO MOTOR A CONTROLLER	A1. FAILS OPEN B1. INTERNAL PART FAILURE	MOTOR A WILL NOT OPERATE IN LOWER MODE	DELAY IN OPERATIONS	3
			A2. FAILS CLOSED B2. INTERNAL PART FAILURE	MOTOR A CONTROLLER WILL HAVE CONTINUOS LOWER COMMAND AT ITS INPUT	NONE. REQUIRES MULTIPLE FAILURES	3

FAILURE MODES AND EFFECTS ANALYSIS (FMEA) WORKSHEET

System: 30 TON BRIDGE CRANE **Program:** SPACE STATION **Facility/Station Set:** SSPF

Subsystem: ELECTRICAL CONTROLS, HOIST

Drawing No.: 101A16061 **Sheet No.:** 1 TO 20 **Page:** 64 **of 156** **Date:** 18 March, 2005

PMN: K61-2944 **Baseline:** 580.01 **Prepared by:** W. DiMeo, Boeing

FIND NO. PART NO.	PART NAME	PART FUNCTION	A. FAILURE MODE B. CAUSE C. FMN D. DETECTION METHOD E. CORRECTING ACTION F. TIME TO EFFECT G. TIMEFRAME	FAILURE EFFECT ON SYSTEM PERFORMANCE	FAILURE EFFECT ON FLIGHT HARDWARE AND/OR PERSONNEL SAFETY	CRIT CAT
HLR1	N.C. CONTACTS IN SERIES WITH ENABLE REALY ER1	WHEN CLOSED ENABLES THE ENABLE RELAY FOR HOIST MOTOR A CONTROLLER	A1. FAILS OPEN B1. INTERNAL PART FAILURE	HOIST IOPERATE	DELAY IN OPERATIONS	3
			A2. FAILS CLOSED B2. INTERNAL PART FAILURE	CONTINUOS ENABLE INPUT TO HOIST MOTOR A CONTROLLER	NONE. REQUIRES DOUBLE FAILURE	3
	N.C. CONTACTS IN SERIES WITH HOIST RAISE RELAY (HRR1)	WHEN CLOSED ENABLES HOIST RAISE RELAY (HRR1) COIL CIRCUIT	A1. FAILS OPEN B1. INTERNAL PART FAILURE	HOIST MOTOR A RELAY WILL NOT OPERATE IN RAISE MODE	NONE. REQUIRES MULTIPLE FAILURES	3
			A2. FAILS CLOSED B2. INTERNAL PART FAILURE	HOIST RAISE RELAY WILL BE ENERGIZED EVEN FOR A HOIST LOWER OPERATION	NONE. REQUIRES DOUBLE FAILURE	3
ULSR1	UPPER LIMIT STOP RELAY COIL	WHEN ENERGIZED ENABLES HOIST IN RAISE MODE	A1. FAILS OPEN B1. INTERNAL PART FAILURE	HOIST WILL NOT OPERATE RAISE MODE	DELAY IN OPERATIONS	3
	N.O. CONTACTS IN SERIES WITH HOIST RAISE RELAY (HRR1)	WHEN CLOSED ENABLES HOIST RAISE RELAY FOR MOTOR 1	A1. FAILS OPEN B1. INTERNAL PART FAILURE	HOIST WILL NOT OPERATE IN RAISE MODE	DELAY IN OPERATIONS	3
			A2. FAILS CLOSED B2. INTERNAL PART FAILURE	HOIST RAISE RELAY (HRR1) CONTINUOSLY ENABLED	NONE. REQUIRES DOUBLE FAILURE	3

FAILURE MODES AND EFFECTS ANALYSIS (FMEA) WORKSHEET

System: 30 TON BRIDGE CRANE **Program:** SPACE STATION **Facility/Station Set:** SSPF

Subsystem: ELECTRICAL CONTROLS, HOIST

Drawing No.: 101A16061 **Sheet No.:** 1 TO 20 **Page:** 65 **of 156** **Date:** 18 March, 2005

PMN: K61-2944 **Baseline:** 580.01 **Prepared by:** W. DiMeo, Boeing

FIND NO. PART NO.	PART NAME	PART FUNCTION	A. FAILURE MODE B. CAUSE C. FMN D. DETECTION METHOD E. CORRECTING ACTION F. TIME TO EFFECT G. TIMEFRAME	FAILURE EFFECT ON SYSTEM PERFORMANCE	FAILURE EFFECT ON FLIGHT HARDWARE AND/OR PERSONNEL SAFETY	CRIT CAT
ULSR1	N.O. CONTACTS IN SERIES WITH HOIST LOWER RELAY	WHEN CLOSED ENABLES HOIST LOWER RELAY I (HLR1) SO HOIST CAN BE LOWERED AFTER UPPER LIMIT SWITCH IS REACHED	A1. FAILS OPEN B1. INTERNAL PART FAILURE	HOIST WILL NOT OPERATE IN LOWER MODE	DELAY IN OPERATIONS	3
			A2. FAILS CLOSED B2. INTERNAL PART FAILURE	NONE	NONE. REQUIRES MULTIPLE FALURE	3
	N.O. CONTACTS IN SERIES WITH ULSR2 COIL	WHEN CLOSED ENABLES ULSR2 (UPPER LIMIT STOP RELAY)	A1. FAILS OPEN B1. INTERNAL PART FAILURE	HOIST B INOPERATIVE	DELAY IN OPERATIONS	3
			A2. FAILS CLOSED B2. INTERNAL PART FAILURE	HOST B CONTINUOSLY ENABLED EVEN IF HOIST A UPPER LIMIT IS REACHED	NONE. REQUIRES MULTIPLE FAILURE	3
	N.O. CONTACTS IN SERIES WITH AUXILIARY RELAY (AC1)	WHEN CLOSED ENABLES THE ENABLE RELAY COIL CIRCUIT	A1. FAILS OPEN B1. INTERNAL PART FAILURE	HOIST INOPERATIVE IN UP DIRECTION. BYPASS CAN BE USED TO LOWER HOIST	DELAY IN OPERATIONS	3
			A2. FAILS CLOSED B2. INTERNAL PART FAILURE	AC1 WILL NOT BE OPENED WHEN UPPER LIMIT SWITCH	NONE. REQUIRES MULTIPLE FAILURE	3
	N.O. CONTACTS IN SERIES WITH ENABLE RELAY (ER1) COIL	WHEN CLOSED ENABLES THE ENABLE RELAY COIL CIRCUIT	A1. FAILS OPEN B1. INTERNAL PART FAILURE	HOIST MOTOR A WILL NOT OPERATE. HOIST MOTOR B WILL STILL OPERATE	NOMNE. REQUIRES MULTIPLE FAILURES	3
			A2. FAILS CLOSED B2. INTERNAL PART FAILURE	ENABLE RELAY WILL NOT DROP OUT WHEN UPPER LIMIT IS REACHED	NONE. REQUIRES MULTIPLE FAILURE	3

FAILURE MODES AND EFFECTS ANALYSIS (FMEA) WORKSHEET

System: 30 TON BRIDGE CRANE **Program:** SPACE STATION **Facility/Station Set:** SSPF

Subsystem: ELECTRICAL CONTROLS, HOIST

Drawing No.: 101A16061 **Sheet No.:** 1 TO 20 **Page:** 66 **of 156** **Date:** 18 March, 2005

PMN: K61-2944 **Baseline:** 580.01 **Prepared by:** W. DiMeo, Boeing

FIND NO. PART NO.	PART NAME	PART FUNCTION	A. FAILURE MODE B. CAUSE C. FMN D. DETECTION METHOD E. CORRECTING ACTION F. TIME TO EFFECT G. TIMEFRAME	FAILURE EFFECT ON SYSTEM PERFORMANCE	FAILURE EFFECT ON FLIGHT HARDWARE AND/OR PERSONNEL SAFETY	CRIT CAT
ULSR1	N.O. CONTACTS IN SERIES WITH ULRS2	WHEN CLOSED ENABLES ULRS2 (UPPER LIMIT STOP RELAY)	A1. FAILS OPEN B1. INTERNAL PART FAILURE	HOIST B INOPERATIVE	DELAY IN OPERATIONS	3
			A2. FAILS CLOSED B2. INTERNAL PART FAILURE	HOIST B CONTINUOSLY ENABLED EVEN IF HOIST A UPPER LIMIT IS REACHED	NONE. REQUIRES MULTIPLE FALURE	3
	N.C. CONTACTS IN SERIES WITH BPR1 (BYPASS RELAY)	WHEN CLOSED (INDICATING UPPER LIMIT REACHED)	A1. FAILS OPEN B1. INTERNAL PART FAILURE	UNABLE TO LOWER HOIST ONCE IT HAS REACHED UPPER LIMIT	DELAY IN OPERATIONS	3
			A2. FAILS CLOSED B2. INTERNAL PART FAILURE	BYPASS A (MOTOR A) SPEED AND POSITION WILL NOT BE INDICATED	NONE.	3
	N.C. CONTACTS IN PARALLEL WITH E-STOP	WHEN CLOSED (UPON REACHING HOIST UPPER LIMIT) CAUSES CRANE TO BE REMOVED	A1. FAILS OPEN B1. INTERNAL PART FAILURE	CRANE POWER WILL NOT BE REMOVED WHEN HOIST REACHES WEIGHTED UPPER LIMIT SWITCH. FIRST LIMIT SWITCH WILL HALT HOIST.	DELAY IN OPERATIONS	3
			A2. FAILS CLOSED B2. INTERNAL PART FAILURE	E-STOP CIRCUIT WILL BE ENABLED STOPPING HOIST	DELAY IN OPERATIONS.	3
	N.O. CONTACTS IN SERIES WITH CR2 (CRANE STOP RELAY)	WHEN CLOSED (HOIST REACHED WEIGHTED UPPER LIMIT) ENABLES CRANE STOP RELAY	A1. FAILS OPEN B1. INTERNAL PART FAILURE	HOIST WILL NOT BE STOPPED BY CR2 WHEN UPPER LIMIT REACHED	NONE. REQUIRES MULTIPLE FAILURE	3
			A2. FAILS CLOSED B2. INTERNAL PART FAILURE	HOIST WILL NOT OPERATE	DELAY IN OPERATIONS	3

FAILURE MODES AND EFFECTS ANALYSIS (FMEA) WORKSHEET

System: 30 TON BRIDGE CRANE **Program:** SPACE STATION **Facility/Station Set:** SSPF

Subsystem: ELECTRICAL CONTROLS, HOIST

Drawing No.: 101A16061 **Sheet No.:** 1 TO 20 **Page:** 67 **of** 156 **Date:** 18 March, 2005

PMN: K61-2944 **Baseline:** 580.01 **Prepared by:** W. DiMeo, Boeing

FIND NO. PART NO.	PART NAME	PART FUNCTION	A. FAILURE MODE B. CAUSE C. FMN D. DETECTION METHOD E. CORRECTING ACTION F. TIME TO EFFECT G. TIMEFRAME	FAILURE EFFECT ON SYSTEM PERFORMANCE	FAILURE EFFECT ON FLIGHT HARDWARE AND/OR PERSONNEL SAFETY	CRIT CAT
NONE	WEIGHTED UPPER LIMIT SWITCH	N.C. SWITCH OPENS WHEN HOIST REACHES UPPER LIMIT	A1. FAILS OPEN B1. INTERNAL PART FAILURE	HOIST WILL NOT OPERATE RAISE MODE	DELAY IN OPERATIONS	3
			A2. FAILS CLOSED B2. INTERNAL PART FAILURE	RELAY ULSR1 CONTINUOSLY ENERGIZED. GEARED UPPER LIMIT SWITCH IS REDUNDANT	NONE. REQUIRES MULTIPLE FAILURE	3
HARA	HOIST A AUXILIARY RELAY COIL	WHEN ENERGIZED, ENABLES HOIST A SPEED INDICATOR, AND HOIST POSITION INDICATORT	A1. FAILS OPEN B1. INTERNAL PART FAILURE	HOIST A (MOTOR A) SPEED AND POSITION WILL NOT BE INDICATED	NONE. REQUIRES MULTIPLE FAILURE	3
	N.O. CONTACTS (2 SETS) IN SERIES DAC1 AND GROUNDE INPUTS TO MOTOR CONTROLLER	N.O. CONTACTS (2 SETS) IN SERIES DAC1 AND GROUNDE INPUTS TO MOTOR CONTROLLER	A1. FAILS OPEN B1. INTERNAL PART FAILURE	HOIST A (MOTOR A) SPEED WILL NOT BE INDICATED	DELAY IN OPERATIONS	3
			A2. FAILS CLOSE B2. INTERNAL PART FAILURE	ERRONEOUS MOTOR A SPEED INDICATION	DELAY IN OPERATIONS	3
	N.O. CONTACTS (2 SETS) IN SERIES DIU BOARD FOR HOIST POSITION INDICATION	N.O. CONTACTS (2 SETS) IN SERIES DIU BOARD FOR HOIST POSITION INDICATION	A1. FAILS OPEN B1. INTERNAL PART FAILURE	HOIST A (MOTOR A) SPEED WILL NOT BE INDICATED	DELAY IN OPERATIONS	3
			A2. FAILS CLOSE B2. INTERNAL PART FAILURE	ERRONEOUS MOTOR A SPEED INDICATION	DELAY IN OPERATIONS	3
HAR	HOIST A RELAY COIL	WHEN ENERGIZED, ENABLES ESR1 RELAY, ENABLES BRAKE CONTACTOR BC1, AND HOIST LOWER RELAY	A1. FAILS OPEN B1. INTERNAL PART FAILURE	HOIST MOTOR A WILL NOT OPERATE BUT MOTOR B WILL OPERATE	NONE. REQUIRES MULTIPLE FAILURE	3

FAILURE MODES AND EFFECTS ANALYSIS (FMEA) WORKSHEET

System: 30 TON BRIDGE CRANE **Program:** SPACE STATION **Facility/Station Set:** SSPF

Subsystem: ELECTRICAL CONTROLS, HOIST

Drawing No.: 101A16061 **Sheet No.:** 1 TO 20 **Page:** 68 **of 156** **Date:** 18 March, 2005

PMN: K61-2944 **Baseline:** 580.01 **Prepared by:** W. DiMeo, Boeing

FIND NO. PART NO.	PART NAME	PART FUNCTION	A. FAILURE MODE B. CAUSE C. FMN D. DETECTION METHOD E. CORRECTING ACTION F. TIME TO EFFECT G. TIMEFRAME	FAILURE EFFECT ON SYSTEM PERFORMANCE	FAILURE EFFECT ON FLIGHT HARDWARE AND/OR PERSONNEL SAFETY	CRIT CAT
HAR	N.O. CONTACTS IN SERIES WITH HOIST RAISE RELAY COIL	WHEN CLOSED, ENABLES HOIST RAISE RELAY HRR1	A1. FAILS OPEN B1. INTERNAL PART FAILURE	HOIST MOTOR WILL NOT OPERATE UNLESS LOAD SHARE SWITCH IS IN MOTOR A POSITION. MOTOR B WILL OPERATE	DELAY IN OPERATION	3
			A2. FAILS CLOSE B2. INTERNAL PART FAILURE	HOIST RAISE RELAY COIL CONTINUOSLY ENERGIZED E-STOP CAN STILL BE USED TO STOP CRANE	NONE. REQUIRES MULTIPLE FAILURE	3
	N.O. CONTACTS IN SERIES WITH HOIST LOWER RELAY (HLR1)	WHEN CLOSED, ENABLES HOIST LOWER RELAY COIL	A1. FAILS OPEN B1. INTERNAL PART FAILURE	HOIST MOTOR WILL NOT OPERATE IN LOWER MODE,. HOWEVER, HOIST MOTOR B WILL OPERATE IN LOWER MODE	NONE. REQUIRES MULTIPLE FAILURES	3
			A2. FAILS CLOSE B2. INTERNAL PART FAILURE	HOIST LOWER REALY 1 (HLR1) CONTINUOSLY ENABLED. HOWEVER,BRAKE WILL NOT RELEASE	NONE. REQUIRES MULTIPLE FAILURE	3
	N.O. CONTACTS IN SERIES WITH BRAKE CONTACTOR	WHEN CLOSED, ENABLES THE HOIST MOTOR A BRAKE CONTACTOR	A1. FAILS OPEN B1. INTERNAL PART FAILURE	HOIST WILL NOT OPERATE IN LOWER MODE	DELAY IN OPERATION	3
			A2. FAILS CLOSE B2. INTERNAL PART FAILURE	BRAKE CONTACTOR COIL, CONTINUOSLY ENABLE BUT NOT ENERGIZED	NONE. REQUIRES MULTIPLE FAILURE	3

FAILURE MODES AND EFFECTS ANALYSIS (FMEA) WORKSHEET

System: 30 TON BRIDGE CRANE **Program:** SPACE STATION **Facility/Station Set:** SSPF

Subsystem: ELECTRICAL CONTROLS, HOIST

Drawing No.: 101A16061 **Sheet No.:** 1 TO 20 **Page:** 69 **of 156** **Date:** 18 March, 2005

PMN: K61-2944 **Baseline:** 580.01 **Prepared by:** W. DiMeo, Boeing

FIND NO. PART NO.	PART NAME	PART FUNCTION	A. FAILURE MODE B. CAUSE C. FMN D. DETECTION METHOD E. CORRECTING ACTION F. TIME TO EFFECT G. TIMEFRAME	FAILURE EFFECT ON SYSTEM PERFORMANCE	FAILURE EFFECT ON FLIGHT HARDWARE AND/OR PERSONNEL SAFETY	CRIT CAT
HAR	N.O. CONTACTS IN SERIES WITH EMERGENCY STOP REALY1 (ESR1)	WHEN CLOSED, ENABLES EMERGENCY STOP RELAY, WINC INDICATES NO EMERGRNCY CONDITION EXISTS	A1. FAILS OPEN B1. INTERNAL PART FAILURE	WHEN CLOSED ALLOWS THE COIL OF ESR1 TO ENERGIZE WITHOUT HOIST B AUXILIARY CONACTOR AC2 BEING ENERGIZED. HOIST WILL ONLY OPERATE IF HOIST B AUXILIARY RELAY AC2 IS ENERGIZED	NONE. REQUIRES MULTIPLE FAILURES	3
			A2. FAILS CLOSE B2. INTERNAL PART FAILURE	RELAY ESR1'S COIL CIRCUIT WILL BE CONSTANTLY ENABLE BY HAR	NONE. REQUIRES MULTIPLE FAILURE	3
HARB	HOIST A AUXILIARY RELAY COIL	WHEN ENERGIZED ENABLES THE +VDC LINE FROM MOTOR CONTROLLER TO BOTH FLOAT SPEED NAD HOIST SPEED CONTROL	A1. FAILS OPEN B1. INTERNAL PART FAILURE	HOIST SPEED CONTROL WILL NOT FUNCTION PROPERLY. HOIST CAN BE STOPPED BY E-STOP OR LETTING UP ON DIRECTION SWITCH	NONE. REQUIRES MULTIPLE FAILURE	3
		N.O. CONTACTS IN SERIES WITH +VDC LINE OF MOTOR CONTROLLER AND HOIST SPEED CONTROL	A1. FAILS OPEN B1. INTERNAL PART FAILURE	HOIST B SPEED CONTROL WILL NOT FUNCTION PROPERLY. HOIST CAN BE STOPPED BY E-STOP OR LETTING UP ON DIRECTION SWITCH	NONE. REQUIRES MULTIPLE FAILURE	3
			A2. FAILS CLOSE B2. INTERNAL PART FAILURE	HOIST B SPEED CONTROL WILL NOT FUNCTION PROPERLY. HOIST CAN BE STOPPED BY E-STOP OR LETTING UP ON DIRECTION SWITCH	NONE. REQUIRES MULTIPLE FAILURES	3

FAILURE MODES AND EFFECTS ANALYSIS (FMEA) WORKSHEET

System: 30 TON BRIDGE CRANE **Program:** SPACE STATION **Facility/Station Set:** SSPF

Subsystem: ELECTRICAL CONTROLS, HOIST

Drawing No.: 101A16061 **Sheet No.:** 1 TO 20 **Page:** 70 **of 156** **Date:** 18 March, 2005

PMN: K61-2944 **Baseline:** 580.01 **Prepared by:** W. DiMeo, Boeing

FIND NO. PART NO.	PART NAME	PART FUNCTION	A. FAILURE MODE B. CAUSE C. FMN D. DETECTION METHOD E. CORRECTING ACTION F. TIME TO EFFECT G. TIMEFRAME	FAILURE EFFECT ON SYSTEM PERFORMANCE	FAILURE EFFECT ON FLIGHT HARDWARE AND/OR PERSONNEL SAFETY	CRIT CAT
HBR1	HOIST B RELAY COIL	WHEN ENERGIZED ENABLES HOIST RAISE RELAY 2, HOIST LOWER RELAY 2, AND HOIST B RELAY	A1. FAILS OPEN B1. INTERNAL PART FAILURE	HOIST MOTOR B WILL NOT OPERATE IN RAISE MODE. HOIST B MOTOR WILL OPERATE. HOWEVER BRAKE B WILL NOT BE RELEASED	DELAY IN OPERATION FAILURE	3
	N.O. CONTACTS IN SERIES WITH HRR2 COIL	WHEN CLOSED ENABLES HRR2 (HOIST RAISE RELAY 2) COIL	A1. FAILS OPEN B1. INTERNAL PART FAILURE	HOIST MOTOR B WILL NOT OPERATE IN RAISE MODE, HOIST MOTOR B'S BRAKE WILL NOT RELEASE	DELAY IN OPERATIONS	3
			A2. FAILS CLOSED B2. INTERNAL PART FAILURE	HOIST MOTOR A AND B DRIVES CONTINUOSLY ON IN RAISE MODE. LOWER MODE WILL FUNCTION NORMALLY. RAISE BUTTON, HOIST LIMIT OR E-STOP WILL HALT HOIST	NONE. REQUIRES MULTIPLE FAILURES	3
	N.O. CONTACTS IN SERIES WITH HLR2 COIL	WHEN CLOSED ENABLES HLR2 (HOIST LOWER RELAY 2) COIL	A1. FAILS OPEN B1. INTERNAL PART FAILURE	HOIST MOTOR B WILL NOT OPERATE IN LOWER MODE, HOIST MOTOR A WILL STILL OPERATE IN LOWER MODE	DELAY IN OPERATIONS	3
			A2. FAILS CLOSED B2. INTERNAL PART FAILURE	HLR2 (HOIST LOWER RELAY 2) CONTINUOSLY ENERGIZED, HOIST WILL OPERATE IN LOWER MODE BUT NOT IN RAISE MODE.. RELEASE OF LOWER SWITCH OR ACTIVATION OF E-STOP WILL STOP CRANE	NONE. REQUIRES MULTIPLE FAILURES	3

FAILURE MODES AND EFFECTS ANALYSIS (FMEA) WORKSHEET

System: 30 TON BRIDGE CRANE **Program:** SPACE STATION **Facility/Station Set:** SSPF

Subsystem: ELECTRICAL CONTROLS, HOIST

Drawing No.: 101A16061 **Sheet No.:** 1 TO 20 **Page:** 71 **of 156** **Date:** 18 March, 2005

PMN: K61-2944 **Baseline:** 580.01 **Prepared by:** W. DiMeo, Boeing

FIND NO. PART NO.	PART NAME	PART FUNCTION	A. FAILURE MODE B. CAUSE C. FMN D. DETECTION METHOD E. CORRECTING ACTION F. TIME TO EFFECT G. TIMEFRAME	FAILURE EFFECT ON SYSTEM PERFORMANCE	FAILURE EFFECT ON FLIGHT HARDWARE AND/OR PERSONNEL SAFETY	CRIT CAT
HBR1	N.O. CONTACTS IN SERIES WITH HOIST B RELAY COIL (HBR 2)	WHEN CLOSED ENABLES HBR2, HBRA AND HBRB RELAY COILS CIRCUIT	A1. FAILS OPEN B1. INTERNAL PART FAILURE	HOIST WILL NOT OPERATE IN LOWER OR RAISE MODE DUE TO BRAKE CONTACTOR BC2 NOT ENERGIZED	DELAY IN OPERATIONS	3
			A2. FAILS CLOSED B2. INTERNAL PART FAILURE	HBR2, HBRA, AND HBRB CONTINUOSLY ENERGIZED	NONE. REQUIRES MULTIPLE FAILURES	3
LSR1	LOAD SHARE RELAY COIL	WHEN ENERGIZED ALLOWS HOIST TO OPERATE IN LOWER OR RAISE MODE USING HOIST MOTOR A, HOIST MOTOR B AND ONLY BRAKE A RELEASED	A1. FAILS OPEN B1. INTERNAL PART FAILURE	HOIST WILL NOT OPERATE IN RAISE TEST MODE. WHICH IS MOTOR A AND MOTOR B ON, BRAKE A RELEASED, BRAKE B ENGAGED	DELAY IN OPERATIONS	3
	N.O. CONTACTS IN PARALLEL WITH HBR1 N.O. CONTACTS	WHEN ENERGIZED ALLOWS HRR2 (HOIST RAISE RELAY 2) TO BE ENERGIZED WITH LOAD SHARE SWITCH IN TEST POSITION	A1. FAILS OPEN B1. INTERNAL PART FAILURE	IN TEST POSITION HOIST MOTOR B WILL NOT BE TURNED ON	DELAY IN OPERATIONS	3
			A2. FAILS CLOSED B2. INTERNAL PART FAILURE	HBR1 N.O. CONTACTS CONTINUOSLY BYPASSED ENABLING HRR2	NONE. REQUIRES MULTIPLE FAILURES	3
	LOAD SHARE RELAY N..O. CONTACTS IN PARALLEL WITH HAR N.O. CONTACTS	WHEN CLOSED, ALLOWS HRR1 (HOIST RAISE RELAY 1) TO BE ENERGIZED WITH LOAD SHARE SWITCH IN TEST POSITION	A1. FAILS OPEN B1. INTERNAL PART FAILURE	IN TEST POSITION HOIST MOTOR A WILL NOT BE TURNED ON	DELAY IN OPERATIONS	3
			A2. FAILS CLOSED B2. INTERNAL PART FAILURE	HAB1 N.O. CONTACTS CONTINUOSLY BYPASSED ENABLING HRR2	NONE. REQUIRES MULTIPLE FAILURES	3

FAILURE MODES AND EFFECTS ANALYSIS (FMEA) WORKSHEET

System: 30 TON BRIDGE CRANE **Program:** SPACE STATION **Facility/Station Set:** SSPF

Subsystem: ELECTRICAL CONTROLS, HOIST

Drawing No.: 101A16061 **Sheet No.:** 1 TO 20 **Page:** 72 of 156 **Date:** 18 March, 2005

PMN: K61-2944 **Baseline:** 580.01 **Prepared by:** W. DiMeo, Boeing

FIND NO. PART NO.	PART NAME	PART FUNCTION	A. FAILURE MODE B. CAUSE C. FMN D. DETECTION METHOD E. CORRECTING ACTION F. TIME TO EFFECT G. TIMEFRAME	FAILURE EFFECT ON SYSTEM PERFORMANCE	FAILURE EFFECT ON FLIGHT HARDWARE AND/OR PERSONNEL SAFETY	CRIT CAT
LSR1	N..O. CONTACTS IN PARALLEL WITH HBR1 N.O. CONTACTS	WHEN CLOSED, ALLOWS HLR2 (HOIST LOWER RELAY 2) TO BE ENERGIZED WITH LOAD SHARE SWITCH IN TEST POSITION	A1. FAILS OPEN B1. INTERNAL PART FAILURE	IN TEST POSITION HOIST MOTOR B WILL NOT BE TURNED ON	DELAY IN OPERATIONS	3
			A2. FAILS CLOSED B2. INTERNAL PART FAILURE	HAR N.O. CONTACTS CONTINUOSLY BYPASSED ENABLING HLR2	NONE. REQUIRES MULTIPLE FAILURES	3
	N..O. CONTACTS IN PARALLEL WITH HAR N.O. CONTACTS	WHEN CLOSED, ALLOWS HLR1 (HOIST LOWER RELAY 1) TO BE ENERGIZED WITH LOAD SHARE SWITCH IN TEST POSITION	A1. FAILS OPEN B1. INTERNAL PART FAILURE	IN TEST POSITION HOIST MOTOR A WILL NOT BE TURNED ON	DELAY IN OPERATIONS	3
			A2. FAILS CLOSED B2. INTERNAL PART FAILURE	HAR N.O. CONTACTS CONTINUOSLY BYPASSED ENABLING HLR1	NONE. REQUIRES MULTIPLE FAILURES	3
LSR1A	LOAD SHARE AUXILIARY RELAY COIL	WHEN ENERGIZED, ENABLES HOIST MOTOR A SPEED AND POSITION INDICATORS	A1. FAILS OPEN B1. INTERNAL PART FAILURE	HOIST POSITION AND SPEED INDICATORS WILL NOT OPERATE IN LOAD SHARE TEST MODE	DELAY IN OPERATIONS	3
	N..O. CONTACTS (2 SETS) IN SERIES WITH HOIST SPEED INDICATOR LINES	ENABLE HOIST SPEED INDICATOR CIRCUIT	A1. FAILS OPEN B1. INTERNAL PART FAILURE	HOIST POSITION AND SPEED INDICATORS WILL NOT OPERATE IN LOAD SHARE TEST MODE	DELAY IN OPERATIONS	3
			A2. FAILS CLOSED B2. INTERNAL PART FAILURE	HOIST POSITION AND SPEED INDICATORS WILL BE CONTINUOSLY ENABLED	DELAY IN OPERATIONS	3

FAILURE MODES AND EFFECTS ANALYSIS (FMEA) WORKSHEET

System: 30 TON BRIDGE CRANE **Program:** SPACE STATION **Facility/Station Set:** SSPF

Subsystem: ELECTRICAL CONTROLS, HOIST

Drawing No.: 101A16061 **Sheet No.:** 1 TO 20 **Page:** 73 **of 156** **Date:** 18 March, 2005

PMN: K61-2944 **Baseline:** 580.01 **Prepared by:** W. DiMeo, Boeing

FIND NO. PART NO.	PART NAME	PART FUNCTION	A. FAILURE MODE B. CAUSE C. FMN D. DETECTION METHOD E. CORRECTING ACTION F. TIME TO EFFECT G. TIMEFRAME	FAILURE EFFECT ON SYSTEM PERFORMANCE	FAILURE EFFECT ON FLIGHT HARDWARE AND/OR PERSONNEL SAFETY	CRIT CAT
LSR1A	N..O. CONTACTS (2 SETS) IN SERIES WITH HOIST POSITION INDICATOR LINES	ENABLE HOIST POSITION INDICATOR CIRCUIT	A1. FAILS OPEN B1. INTERNAL PART FAILURE	HOIST SPEED INDICATORS WILL NOT OPERATE IN LOAD SHARE TEST MODE	DELAY IN OPERATIONS	3
			A2. FAILS CLOSED B2. INTERNAL PART FAILURE	HOIST POSITION INDICATORS WILL BE CONTINUOSLY ENABLED	DELAY IN OPERATIONS	3
LSR1B	LOAD SHARE AUXILIARY RELAY B COIL	WHEN ENERGIZED, ENABLES +VDC LINE FROM MOTOR CONTROLLER TO HOIST SPEED CONTROLLER	A1. FAILS OPEN B1. INTERNAL PART FAILURE	HOIST MOTOR SPEED CONTROLS WILL NOT FUNCTION PROPERLY	DELAY IN OPERATIONS	3
LSRB1	N..O. CONTACTS IN SERIES WITH +VDC LINE OF MOTOR A CONTROLLER AND HOIST SPEED CONTROLS	WHEN CLOSED ALLOWS SPEED CONTROL FUNCTION WHEN HOIST LOAD SHARE SWITCH IS IN TEST MODE	A1. FAILS OPEN B1. INTERNAL PART FAILURE	SPEED CONTROL WILL NOT OPERATE WHEN LOAD SHARE SWITCH IS IN TEST MODE	DELAY IN OPERATIONS	3
			A2. FAILS CLOSED B2. INTERNAL PART FAILURE	SPEED CONTROL WILL BE CONTINUOSLY ENABLED	NONE. REQUIRES MULTIPLE FAILURES	3
HL	HOIST LOWER SWITCH	WHEN CLOSED ENABLES HOIST LOWER MODE	A1. FAILS OPEN B1. INTERNAL PART FAILURE	HOIST WILL NOT OPERATE IN LOWERE MODE	DELAY IN OPERATIONS	3
			A2. FAILS CLOSED B2. INTERNAL PART FAILURE	NONE. ALONG WITH HOIST DOWN COMMAND A SPEED COMMAND IS REQUIRED	NONE. REQUIRES MULTIPLE FAILURES	3

FAILURE MODES AND EFFECTS ANALYSIS (FMEA) WORKSHEET

System: 30 TON BRIDGE CRANE **Program:** SPACE STATION **Facility/Station Set:** SSPF

Subsystem: ELECTRICAL CONTROLS, HOIST

Drawing No.: 101A16061 **Sheet No.:** 1 TO 20 **Page:** 74 of 156 **Date:** 18 March, 2005

PMN: K61-2944 **Baseline:** 580.01 **Prepared by:** W. DiMeo, Boeing

FIND NO. PART NO.	PART NAME	PART FUNCTION	A. FAILURE MODE B. CAUSE C. FMN D. DETECTION METHOD E. CORRECTING ACTION F. TIME TO EFFECT G. TIMEFRAME	FAILURE EFFECT ON SYSTEM PERFORMANCE	FAILURE EFFECT ON FLIGHT HARDWARE AND/OR PERSONNEL SAFETY	CRIT CAT
HFD	HOIST FLOAT DOWN SWITCH	WHEN ENERGIZED ENABLES HOIST DOWN IN FLOAT MODE	A1. FAILS OPEN B1. INTERNAL PART FAILURE	HOIST WILL NOT OPERATE IN FLOAT DOWN MODE	DELAY IN OPERATIONS	3
			A2. FAILS CLOSED B2. INTERNAL PART FAILURE	HOIST FLOAT WILL ONLY OPERATE IN DOWN MODE	DELAY IN OPERATIONS	3
HFU	HOIST FLOAT UP SWITCH	WHEN ENERGIZED ENABLES HOIST UP FLOAT MODE	A1. FAILS OPEN B1. INTERNAL PART FAILURE	HOIST WILL NOT OPERATE IN FLOAT UP MODE	DELAY IN OPERATIONS	3
			A2. FAILS CLOSED B2. INTERNAL PART FAILURE	HOIST FLOAT WILL ONLY OPERATE IN UP MODE	DELAY IN OPERATIONS	3
HTS	HOIST THUMB SWITCH	WHEN CLOSED ENABLES MASTER SWITCH	A1. FAILS OPEN B1. INTERNAL PART FAILURE	HOIST WILL NOT OPERATE IN FLOAT MODE	DELAY IN OPERATIONS	3
			A2. FAILS CLOSED B2. INTERNAL PART FAILURE	NONE	NONE. REQUIRES DOUBLE FAILURE	3
NONE	LOAD SHARE SWITCH N.O. CONTACTS IN SERIES WITH HAR RELAY COIL	SELECTS EITHER NORMAL (BOTH MOTORS AND DRIVES) OR TEST MODE (BOTH MOTORS AND ONE BRAKE RELEASED)	A1. FAILS OPEN B1. INTERNAL PART FAILURE	HOIST MOTOR A WILL NOT OPERATE IN NORMAL MODE	NONE. REQUIRES DOUBLE FAILURE	3
			A2. FAILS CLOSED B2. INTERNAL PART FAILURE	WHEN LOAD SHARE SWITCH IN TEST MODE, HAR WILL BE ENERGIZED	NONE. REQUIRES DOUBLE FAILURE	3
	LOAD SHARE SWITCH N.C. CONTACTS IN SERIES WITH LSR1 COIL	WHEN CLOSED ENABLES LOAD SHARE RELAYS FOR TEST MODE	A1. FAILS OPEN B1. INTERNAL PART FAILURE	HOIST WILL NOT OPERATE IN LOAD SHARE MODE	DELAY IN OPERATIONS	3
			A2. FAILS CLOSED B2. INTERNAL PART FAILURE	HOSIT LOAD SHARE RELAYS CONTINUOSLY ENERGIZED	NONE. REQUIRES DOUBLE FAILURE	3

FAILURE MODES AND EFFECTS ANALYSIS (FMEA) WORKSHEET

System: 30 TON BRIDGE CRANE **Program:** SPACE STATION **Facility/Station Set:** SSPF

Subsystem: ELECTRICAL CONTROLS, HOIST

Drawing No.: 101A16061 **Sheet No.:** 1 TO 20 **Page:** 75 **of 156** **Date:** 18 March, 2005

PMN: K61-2944 **Baseline:** 580.01 **Prepared by:** W. DiMeo, Boeing

FIND NO. PART NO.	PART NAME	PART FUNCTION	A. FAILURE MODE B. CAUSE C. FMN D. DETECTION METHOD E. CORRECTING ACTION F. TIME TO EFFECT G. TIMEFRAME	FAILURE EFFECT ON SYSTEM PERFORMANCE	FAILURE EFFECT ON FLIGHT HARDWARE AND/OR PERSONNEL SAFETY	CRIT CAT
NONE	N.O. CONTACTS IN SERIES WITH HBR1 (HOIST B RELAY)	WHEN CLOSED (NORMAL MODE) ENABLES HBR1 RELAY	A1. FAILS OPEN B1. INTERNAL PART FAILURE	HOIST MOTOR B WILL NOT OPERATE	DELAY IN OPERATIONS	3
			A2. FAILS CLOSED B2. INTERNAL PART FAILURE	HOSIT MOTOR B WILL BE CONTINUOSLY ENABLED	NONE. REQUIRES DOUBLE FAILURE	3
NONE	N.C. CONTACTS IN SERIES WITH LSR1 RELAY COIL	WHEN CLOSED (IN LOAD SHARE TEST MODE) ENERGIZES LSR1, LSR1A, AND LSR1B RELAYS	A1. FAILS OPEN B1. INTERNAL PART FAILURE	LOAD SHARE RELAYS CONTINUOSLY ENERGIZED	NONE. REQUIRES MULTIPLE FAILURES	3
	GEARED LOWER LIMIT SWITCH	WHEN OPEN DISABLES HOIST LOWER MODE	A1. FAILS OPEN B1. INTERNAL PART FAILURE	HOIST WILL NOT OPERATE IN LOWER MODE	DELAY IN OPERATIONS	3
			A2. FAILS CLOSED B2. INTERNAL PART FAILURE	HOSIT WILL NOT HALT LOWER OPERATION WHEN HOOK REACHES FLOOR. LETTING UP ON HOIST LOWER SWITCH OR PRESSING E-STOP WILL HALT HOIST	DELAY IN OPERATIONS	3
MBR1	MANUAL BYPASS RELAY COIL	WHEN ENERGIZED, ALLOWS HOIST TO BE LOWERED AFTER UPPER LIMIT HAS BEEN TRIPPED	A1. FAILS OPEN B1. INTERNAL PART FAILURE	ONCE HOIST REACHES UPPER LIMIT, LOAD CANNOT BE LOWERED	DELAY IN OPERATIONS	3
	N.O. CONTACTS IN PARALLEL WITH ULSR	WHEN CLOSED ALLOWS HOIST TO BE LOWERED AFTER UPPER LIMIT HAS BEEN TRIPPED	A1. FAILS OPEN B1. INTERNAL PART FAILURE	ONCE HOIST REACHES UPPR LIMI, LOAD CANNOT BE LOWERED	DELAY IN OPERATIONS	3
			A2. FAILS CLOSED B2. INTERNAL PART FAILURE	LOWER MODE WILL BE ENABLED WITH OUT BYPASS SWITCH BEING SWITCHED	NONE. REQUIRES DOUBLE FAILURE	3

FAILURE MODES AND EFFECTS ANALYSIS (FMEA) WORKSHEET

System: 30 TON BRIDGE CRANE **Program:** SPACE STATION **Facility/Station Set:** SSPF

Subsystem: ELECTRICAL CONTROLS, HOIST

Drawing No.: 101A16061 **Sheet No.:** 1 TO 20 **Page:** 76 **of 156** **Date:** 18 March, 2005

PMN: K61-2944 **Baseline:** 580.01 **Prepared by:** W. DiMeo, Boeing

FIND NO. PART NO.	PART NAME	PART FUNCTION	A. FAILURE MODE B. CAUSE C. FMN D. DETECTION METHOD E. CORRECTING ACTION F. TIME TO EFFECT G. TIMEFRAME	FAILURE EFFECT ON SYSTEM PERFORMANCE	FAILURE EFFECT ON FLIGHT HARDWARE AND/OR PERSONNEL SAFETY	CRIT CAT
MBR1	N.O. CONTACTS IN PARALLEL WITH E-STOP	WHEN CLOSED ENABLES E-STOP SWITCH WHEN UPPER LIMIT IS REACHED	A1. FAILS OPEN B1. INTERNAL PART FAILURE	HOIST POWER WILL NOT BE REMOVED WHEN WEIGHTED UPPER LIMIT IS REACHED. HOIST WILL BE STOPPED BY PREVIOUS LIMIT SWITCH.	NONE. REQUIRES DOUBLE FAILURE	3
			A2. FAILS CLOSED B2. INTERNAL PART FAILURE	E-STOP CIRCUIT ENABLED EVEN WHEN BYPASS SWITCH CLOSED	DELAY IN OPERATIONS	3
	N.O. CONTACTS IN SERIES WITH HBR RELAY COIL	WHEN CLOSED ENABLES HOIST B TO OPERATE IN LOWER MODE AFTER UPPER LIMIT IS REACHJED	A1. FAILS OPEN B1. INTERNAL PART FAILURE	HOIST B MOTOR WILL NOT OPERATE IN LOWER MODE AFTER UPPER LIMIT REACHED	DELAY IN OPERATION	3
			A2. FAILS CLOSED B2. INTERNAL PART FAILURE	NONE	NONE. REQUIRES MULTIPLE FAILURES	3
	N.O. CONTACTS IN SERIES WITH CR2 RELAY COIL	WHEN CLOSED ENABLES CR2 FOR LOWERING OF HOIST AFTER UPPER LIMIT REACHED	A1. FAILS OPEN B1. INTERNAL PART FAILURE	UNABLE TO LOWER HOIST AFTER WEIGHTED UPPER LIMIT SWITCH ACTIVATED	DELAY IN OPERATION	3
			A2. FAILS CLOSED B2. INTERNAL PART FAILURE	CR2 ENABLED AFTER UPPER LIMIT SWITCH REACHED WITHOUT BYPASS SWITCH BEING CLOSED	NONE. REQUIRES MULTIPLE FAILURES	3
LFR	LOAD FLOAT RELAY COIL	WHEN ENERGIZED, ENABLES HOIST MOTORS A AND B CONTROLLERS FOR LOAD FLOAT MODE	A1. FAILS OPEN B1. INTERNAL PART FAILURE	LOAD FLOAT WILL NOT FUNCTION	DELAY IN OPERATIONS	3

FAILURE MODES AND EFFECTS ANALYSIS (FMEA) WORKSHEET

System: 30 TON BRIDGE CRANE **Program:** SPACE STATION **Facility/Station Set:** SSPF

Subsystem: ELECTRICAL CONTROLS, HOIST

Drawing No.: 101A16061 **Sheet No.:** 1 TO 20 **Page:** 77 of 156 **Date:** 18 March, 2005

PMN: K61-2944 **Baseline:** 580.01 **Prepared by:** W. DiMeo, Boeing

FIND NO. PART NO.	PART NAME	PART FUNCTION	A. FAILURE MODE B. CAUSE C. FMN D. DETECTION METHOD E. CORRECTING ACTION F. TIME TO EFFECT G. TIMEFRAME	FAILURE EFFECT ON SYSTEM PERFORMANCE	FAILURE EFFECT ON FLIGHT HARDWARE AND/OR PERSONNEL SAFETY	CRIT CAT
LFR	N.O. CONTACTS IN SERIES WITH MOTOR B CONTROLLER	WHEN CLOSED ENABLES HOIST B MOTOR CONTROLLER	A1. FAILS OPEN B1. INTERNAL PART FAILURE	HOIST MOTOR B WILL NOT OPERATE IN FLOAT MODE	DELAY IN OPERATION	3
			A2. FAILS CLOSED B2. INTERNAL PART FAILURE	MOTOR B CONTROLLER WILL BE CONSTANTLY ENABLED FOR FLOAT MODE	DELAY IN OPERATIONS	3
	N.O. CONTACTS IN SERIES WITH MOTOR A CONTROLLER	WHEN CLOSED ENABLES HOIST A MOTOR CONTROLLER	A1. FAILS OPEN B1. INTERNAL PART FAILURE	HOIST MOTOR A WILL NOT OPERATE IN FLOAT MODE	DELAY IN OPERATION	3
			A2. FAILS CLOSED B2. INTERNAL PART FAILURE	MOTOR A CONTROLLER WILL BE CONSTANTLY ENABLED FOR FLOAT MODE	DELAY IN OPERATIONS	3
	N.O. CONTACTS IN SERIES WITH HOIST RAISE MASTER SWITCH CONTACTS	WHEN CLOSED ENABLES HOIST MASTER SWITCH FOR EITHER UP OR DOWN MOTION	A1. FAILS OPEN B1. INTERNAL PART FAILURE	HOIST WILL NOT OPERATE FROM MASTER SWITCH ON CONSOLE	DELAY IN OPERATION	3
			A2. FAILS CLOSED B2. INTERNAL PART FAILURE	HOIST MASTER SWITCH WILL BE ENABLED IN EVEN WHEN LOAD FLOAT FOOT SWITCH IS CLOSED, HOWEVER OPEN CONTACTS RTS WILL DISABLE THE MASTER SWITCH	DELAY IN OPERATIONS	3
	N.O. CONTACTS IN SERIES WITH HOIST FLOAT UP/DOWN SWITCH	WHEN CLOSED ENABLES HOIST UP/DOWN FLOAT MODE	A1. FAILS OPEN B1. INTERNAL PART FAILURE	FLOAT MODE WILL NOT OPERATE	DELAY IN OPERATION	3
			A2. FAILS CLOSED B2. INTERNAL PART FAILURE	FLOAT MODE SWITCH AND MASTER SWITCH BOTH ENABLED IF HTS IS ALSO CLOSED	DELAY IN OPERATIONS	3

FAILURE MODES AND EFFECTS ANALYSIS (FMEA) WORKSHEET

System: 30 TON BRIDGE CRANE **Program:** SPACE STATION **Facility/Station Set:** SSPF

Subsystem: ELECTRICAL CONTROLS, HOIST

Drawing No.: 101A16061 **Sheet No.:** 1 TO 20 **Page:** 78 of 156 **Date:** 18 March, 2005

PMN: K61-2944 **Baseline:** 580.01 **Prepared by:** W. DiMeo, Boeing

FIND NO. PART NO.	PART NAME	PART FUNCTION	A. FAILURE MODE B. CAUSE C. FMN D. DETECTION METHOD E. CORRECTING ACTION F. TIME TO EFFECT G. TIMEFRAME	FAILURE EFFECT ON SYSTEM PERFORMANCE	FAILURE EFFECT ON FLIGHT HARDWARE AND/OR PERSONNEL SAFETY	CRIT CAT
NONE	LOAD FLOAT FOOT SWITCH	WHEN CLOSED ENABLES LOAD FLOAT MODE	A1. FAILS OPEN B1. INTERNAL PART FAILURE	HOIST WILL NOT OPERATE IN LOAD FLOAT MODE	DELAY IN OPERATION	3
			A2. FAILS CLOSED B2. INTERNAL PART FAILURE	FLOAT LOAD MODE CONTINUOSLY ENGAGED	DELAY IN OPERATIONS	3
SMR	SPOOLING MONITOR RELAY COIL	WHEN ENERGIZED INDICATES A ROPE SPOOLING ERROR OCCURRED	A1. FAILS OPEN B1. INTERNAL PART FAILURE	HOIST OPERATION WILL NOT BE STOPPED AS THEY SHOULD WHEN A SPOOLING MALFUNCTION OCCURS. E-STOP AND OR RELEASE OF DIRECTION CONTROL WILL HALT HOIST	NONE. REQUIRES MULTIPLE FAILURES	3
	N.C. CONTACTS IN SERIES WITH ESR1 COIL	WHEN OPENED, CAUSES ESR1 RELAY TO DROP OUT INDICATING ERROR ON HOIST MOTOR A	A1. FAILS OPEN B1. INTERNAL PART FAILURE	HOIST MOTOR A WILL NOT OPERATE. HOIST MOTOR B WILL OPERATE	DELAY IN OPERATION	3
			A2. FAILS CLOSED B2. INTERNAL PART FAILURE	HOIST MOTOR A WILL NOT BE INTERRUPTED WHEN A SPOOLING ERROR HAS OCCURED	DELAY IN OPERATIONS	3
	N.C. CONTACTS IN SERIES WITH ESR1 COIL	WHEN OPENED, CAUSES ESR1 RELAY TO DROP OUT INDICATING ERROR ON HOIST MOTOR A	A1. FAILS OPEN B1. INTERNAL PART FAILURE	HOIST MOTOR A WILL NOT OPERATE. HOIST MOTOR B WILL OPERATE	DELAY IN OPERATION	3
			A2. FAILS CLOSED B2. INTERNAL PART FAILURE	HOIST MOTOR B WILL NOT BE INTERRUPTED WHEN A SPOOLING ERROR HAS OCCURED	DELAY IN OPERATIONS	3

FAILURE MODES AND EFFECTS ANALYSIS (FMEA) WORKSHEET

System: 30 TON BRIDGE CRANE **Program:** **SPACE STATION** **Facility/Station Set:** SSPF

Subsystem: ELECTRICAL CONTROLS, HOIST

Drawing No.: 101A16061 **Sheet No.:** 1 TO 20 **Page:** 79 **of 156** **Date:** 18 March, 2005

PMN: K61-2944 **Baseline:** 580.01 **Prepared by:** W. DiMeo, Boeing

FIND NO. PART NO.	PART NAME	PART FUNCTION	A. FAILURE MODE B. CAUSE C. FMN D. DETECTION METHOD E. CORRECTING ACTION F. TIME TO EFFECT G. TIMEFRAME	FAILURE EFFECT ON SYSTEM PERFORMANCE	FAILURE EFFECT ON FLIGHT HARDWARE AND/OR PERSONNEL SAFETY	CRIT CAT
NONE	N.O. WIRE ROPE SPOOLING LIMIT SWITCH	WHEN CLOSED INDICATES A ROPE SPOOLING ERROR OCCURS	A1. FAILS OPEN B1. INTERNAL PART FAILURE	HOIST OPERATIONS WILL NOT BE STOPPED AS THEY SHOULD WHEN A SPOOLING MALFUNCTION OCCURS. E-STOP AND OR RELEASE OF DIRECTION CONTROL WILL HALT OPERATION	NONE. REQUIRES MULTIPLE FAILURES	3
			A2. FAILS CLOSED B2. INTERNAL PART FAILURE	HOIST WILL NOT OPERATE	DELAY IN OPERATIONS	3
SSR1	SPEED SELECT RELAY COIL	WHEN ENERGIZED, INPUTS SLOW SPEED TO MOTOR A AND B CONTROLLERS	A1. FAILS OPEN B1. INTERNAL PART FAILURE	HOIST WILL NOT OPERATE. IN SLOW MODE	DELAY IN OPERATION	3
	N.O. CONTACTS IN SERIES WITH SLOW SPEED INPUT OF MOTOR A CONTROLLER	WHEN CLOSED INPUTS SLOW SPEED TO MOTOR A CONTROLLER	A1. FAILS OPEN B1. INTERNAL PART FAILURE	HOIST MOTOR CONTROLLER A WILL NOT OPERATE. IN SLOW SPEED	DELAY IN OPERATION	3
			A2. FAILS CLOSED B2. INTERNAL PART FAILURE	HOIST MOTOR B WILL NOT BE INTERRUPTED WHEN A SPOOLING ERROR HAS OCCURED	DELAY IN OPERATIONS	3
	N.O. CONTACTS IN SERIES WITH SLOW SPEED INPUT OF MOTOR B CONTROLLER	WHEN CLOSED INPUTS SLOW SPEED TO MOTOR B CONTROLLER	A1. FAILS OPEN B1. INTERNAL PART FAILURE	HOIST MOTOR CONTROLLER B WILL NOT OPERATE IN SLOW MODE	DELAY IN OPERATION	3
			A2. FAILS CLOSED B2. INTERNAL PART FAILURE	HOIST MOTOR CONTROLLER B WILL CONTINUOSLY BE IN SLOW MODE	DELAY IN OPERATIONS	3

FAILURE MODES AND EFFECTS ANALYSIS (FMEA) WORKSHEET

System: 30 TON BRIDGE CRANE **Program:** SPACE STATION **Facility/Station Set:** SSPF

Subsystem: ELECTRICAL CONTROLS, HOIST

Drawing No.: 101A16061 **Sheet No.:** 1 TO 20 **Page:** 80 **of 156** **Date:** 18 March, 2005

PMN: K61-2944 **Baseline:** 580.01 **Prepared by:** W. DiMeo, Boeing

FIND NO. PART NO.	PART NAME	PART FUNCTION	A. FAILURE MODE B. CAUSE C. FMN D. DETECTION METHOD E. CORRECTING ACTION F. TIME TO EFFECT G. TIMEFRAME	FAILURE EFFECT ON SYSTEM PERFORMANCE	FAILURE EFFECT ON FLIGHT HARDWARE AND/OR PERSONNEL SAFETY	CRIT CAT
SSR1	N.O. CONTACTS IN SERIES WITH TERMINAL 2 OF EIB BOARD OF MOTOR A CONTROLLER	WHEN CLOSED BYPASSES 17.0K RESISTOR TO PROVIDE CORRECT LEVEL TO HOIST SPEED INDICATOR	A1. FAILS OPEN B1. INTERNAL PART FAILURE	HOIST SPEED INDICATOR WILL NOT INDICATE CORRRECT SPEED	NONE. REQUIRES MULTIPLE FAILURES	3
			A2. FAILS CLOSED B2. INTERNAL PART FAILURE	HOIST SPEED INDICATOR WILL NOT INDICATE CORRECT SPEED	NONE. REQUIRES MULTIPLE FAILURES	3
NONE	SPEED SELECT SWITCH	WHEN CLOSED SELECTS SLOW SPEED FOR HOIST MOTORS A AND B	A1. FAILS OPEN B1. INTERNAL PART FAILURE	HOIST WILL NOT OPERATE IN SLOW SPEED	DELAY IN OPERATION	3
			A2. FAILS CLOSED B2. INTERNAL PART FAILURE	HOIST WILL ONLY OPERATE IN SLOW SPEED	DELAY IN OPERATIONS	3
LTR1	LAMP TEST RELAY COIL	WHEN ENERGIZED CAUSES INDICATOR LAMPS TO ILLUMINATE FOR TESTING	A1. FAILS OPEN B1. INTERNAL PART FAILURE	LAMP TEST FUNCTION WILL NOT ILLUMINATE	DELAY IN OPERATION	3
	N.O. CONTACTS IN SERIES WITH MOTOR A TEMPERATURE WARNING, MOTOR A OVERHEAT, HOIST A FAILURE, LOAD IMBALANCE, LTR2, LTR3, LTR4	WHEN CLOSED ILLUMINATES RESPECTIVE INDICATOR LAMPS FOR TEST	A1. FAILS OPEN B1. INTERNAL PART FAILURE	ASSOCIATED LAMP WILL NOT ILLUMINATE WHEN TESTED	DEALY IN OPERATION	3
			A2. FAILS CLOSED B2. INTERNAL PART FAILURE	ASSOCIATED LAMP WILL STAY ILLUMINATED CONTINUOSLY	DEALY IN OPERATION	3

FAILURE MODES AND EFFECTS ANALYSIS (FMEA) WORKSHEET

System: 30 TON BRIDGE CRANE **Program:** SPACE STATION **Facility/Station Set:** SSPF

Subsystem: ELECTRICAL CONTROLS, HOIST

Drawing No.: 101A16061 **Sheet No.:** 1 TO 20 **Page:** 81 **of 156** **Date:** 18 March, 2005

PMN: K61-2944 **Baseline:** 580.01 **Prepared by:** W. DiMeo, Boeing

FIND NO. PART NO.	PART NAME	PART FUNCTION	A. FAILURE MODE B. CAUSE C. FMN D. DETECTION METHOD E. CORRECTING ACTION F. TIME TO EFFECT G. TIMEFRAME	FAILURE EFFECT ON SYSTEM PERFORMANCE	FAILURE EFFECT ON FLIGHT HARDWARE AND/OR PERSONNEL SAFETY	CRIT CAT
NONE	LAMP TEST PUSH-BUTTON	WHEN CLOSED CAUSES ALL INDICATOR LAMPS TO ILLUMINATE FOR TESTING	A1. FAILS OPEN B1. INTERNAL PART FAILURE	NO INDICATOR LAMPS WILL ILLUMINATE	DELAY IN OPERATION	3
			A2. FAILS CLOSED B2. INTERNAL PART FAILURE	ALL INDICATOR LAMPS WILL STAY ILLUMINATED	DELAY IN OPERATIONS	3
	BYPASS UPPER WEIGHTED LIMIT SWITCH	WHEN CLOSED ALLOWS HOIST TO OPERATE IN LOWER MODE ONCE UPPER LIMIT HAS BEEN REACHED	A1. FAILS OPEN B1. INTERNAL PART FAILURE	HOIST WILL NOT OPERATE IN LOWER POSITION IF UPPER WEIGHTED LIMIT SWITCH HAS BEEN REACHED	NONE. REQUIRES MULTIPLE FAILURES	3
			A2. FAILS CLOSED B2. INTERNAL PART FAILURE	UPPER WEIGHTED LIMIT SWITCH WILL BE CONTINUOSLY BYPASSED FOR LOWER MODE	DELAY IN OPERATIONS	3
	MOTOR A AND MOTOR B TEMPERATURE WARNING INDICATOR LAMPS	WHEN ILLUMINATED INDICATES ASSOCIATED MOTOR IS OVERHEATED	A1. FAILS OPEN B1. INTERNAL PART FAILURE	OVERTEMPERATURE CONDITION WILL NOT BE INDICATED BY ASSOCIATED LAMP. OVERHEAT LAMP WILL EVENTUALLY ILLUMINATE	NONE. REQUIRES MULTIPLE FAILURES	3
			A2. FAILS CLOSED B2. INTERNAL PART FAILURE	OVERHEAT CONDITION WILL NOT BE INDICATED BY ASSOCIATED LAMP. IF CONDITION PERSISTS MOTOR WILL SHUT DOWN DUE TO MOTOR OVER TEMP RELAY OR BREAKER WILL OPEN	DELAY IN OPERATIONS	3

FAILURE MODES AND EFFECTS ANALYSIS (FMEA) WORKSHEET

System: 30 TON BRIDGE CRANE **Program:** SPACE STATION **Facility/Station Set:** SSPF

Subsystem: ELECTRICAL CONTROLS, HOIST

Drawing No.: 101A16061 **Sheet No.:** 1 TO 20 **Page:** 82 **of 156** **Date:** 18 March, 2005

PMN: K61-2944 **Baseline:** 580.01 **Prepared by:** W. DiMeo, Boeing

FIND NO. PART NO.	PART NAME	PART FUNCTION	A. FAILURE MODE B. CAUSE C. FMN D. DETECTION METHOD E. CORRECTING ACTION F. TIME TO EFFECT G. TIMEFRAME	FAILURE EFFECT ON SYSTEM PERFORMANCE	FAILURE EFFECT ON FLIGHT HARDWARE AND/OR PERSONNEL SAFETY	CRIT CAT
NONE	HOIST A FAILURE LAMP	WHEN ILLUMINATED INDICATES HOIST MOTOR A HAS EITHER HAD A SPOOLING ERROR, RELAY AC1 HAS DE-ENERGIZED. A MOTOR OVERTEMP EXISTS OR HOIST B RELAY AC2 HAS DE-ENERGIZED	A1. FAILS OPEN B1. INTERNAL PART FAILURE	HOIST MOTOR A FAILURE WILL NOT BE INDICATED BY LAMP BUT HOIST A WILL BE INOPERATIVE	NONE. REQUIRES MULTIPLE FAILURES	3
	HOIST B FAILURE LAMP	WHEN ILLUMINATED INDICATES HOIST MOTOR B HAS EITHER HAD A SPOOLING ERROR, RELAY AC1 HAS DE-ENERGIZED. A MOTOR OVERTEMP EXISTS OR HOIST B RELAY AC1 HAS DE-ENERGIZED	A1. FAILS OPEN B1. INTERNAL PART FAILURE	HOIST MOTOR B FAILURE WILL NOT BE INDICATED BY LAMP BUT HOIST A WILL BE INOPERATIVE	NONE. REQUIRES MULTIPLE FAILURES	3
	LOAD IMBALANCE INDICATOR	WHEN ILLUMINATED INDICATES HOIST A PROBLEM EXIST IN EITHERMOTOR A OR B WHILE HOIST IS IN TEST MODE	A1. FAILS OPEN B1. INTERNAL PART FAILURE	A LOAD IMBALANCE CONDITION WILL NOT BE INDICATED BY LOAD IMBALANCE INDICATOR	NONE. REQUIRES MULTIPLE FAILURES	3
	DOOR SWITCH	WHEN CLOSED ACTIVATES MOTOR CONTROLLER ENCLOSURE FLORESCENT LAMP	A1. FAILS OPEN B1. INTERNAL PART FAILURE	ENCLOSURE WILL NOT BE ILLUMINATED FOR MAINTENACE/INSPECTION	DELAY IN OPERATIONS	3
			A2. FAILS CLOSED B2. INTERANL PART FAILURE	FLOURESCENT LAMP WILL FAIL PREMATURELY	DELAY IN OPERATIONS	3

FAILURE MODES AND EFFECTS ANALYSIS (FMEA) WORKSHEET

System: 30 TON BRIDGE CRANE **Program:** SPACE STATION **Facility/Station Set:** SSPF

Subsystem: ELECTRICAL CONTROLS, HOIST

Drawing No.: 101A16061 **Sheet No.:** 1 TO 20 **Page:** 83 **of 156** **Date:** 18 March, 2005

PMN: K61-2944 **Baseline:** 580.01 **Prepared by:** W. DiMeo, Boeing

FIND NO. PART NO.	PART NAME	PART FUNCTION	A. FAILURE MODE B. CAUSE C. FMN D. DETECTION METHOD E. CORRECTING ACTION F. TIME TO EFFECT G. TIMEFRAME	FAILURE EFFECT ON SYSTEM PERFORMANCE	FAILURE EFFECT ON FLIGHT HARDWARE AND/OR PERSONNEL SAFETY	CRIT CAT
NONE	ENCLOSURE FLOURESCENT LAMP	IILLUMINATES INTERIOR OF MOTOR CONTROLLER FOR MAINTENANCE/INSPECTIONS	A1. FAILS OPEN B1. INTERNAL PART FAILURE	INTERIOR OF CABINET WILL NOT BE ILLUMINATED FOR MAINTENACE/INSPECTION	DELAY IN OPERATIONS	3
	LAMP TEST RELAY 2	WHEN ENERGIZED ASSOCIATED INDICATOR LAMPS WILL BE TESTED	A1. FAILS OPEN B1. INTERNAL PART FAILURE	LAMP TEST FUNCTION FOR MOTOR B WILL NOT OPERATE	DELAY IN OPERATION	3
LTR2	N.O. CONTACTS IN SERIES WIITH MOTOR B TEMPERATURE WARNING, MOTOR B OVERHEAT, HOIST B	WHEN CLOSED ILLUMINATES RESPECTIVE INDICATOR LAMPS FOR TEST	A1. FAILS OPEN B1. INTERNAL PART FAILURE	ASSOCIATED LAMP WILL NOT ILLUMINATE WHEN TESTED	DELAY IN OPERATION	3
			A2. FAILS CLOSED B2. INTERNAL PART FAILURE	ASSOCIATED LAMP WILL STAY ILLUMINATED CONTINUOSLY	DELAY IN OPERATIONS	3
HBJM	HOIST B MOTOR CONTROLLER	TROUGH EXTERNAL HOIST CONTROL LOGIG (RELAYS) CONTROLS POWER TO HOIST MOTOR BY MONITORING TORQUE, SPEED, LOAD, AND BRAKE CONDITIONS	A1. NO OUTPUT B1. INTERNAL PART FAILURE	SEE SEPARATE SECTION COVERING MOTOR CONTROLLER SUB-SYSTEMS	DELAY IN OPERATION	3
			A2. INCORRECT OUTPUT (INCORRECT LEVEL) B2. INTERNAL PART FAILURE	SEE SEPARATE SECTION COVERING MOTOR CONTROLLER SUB-SYSTEMS	NONE. REQUIRES MULTIPLE FAILURES	3
FR4	FAULT RELAY 2 COIL	WHEN NOT ENERGIZED BY HOIST B CONTROLLER RELAYS AC2 AND N2 (LINE CONTACTORS) ARE DISABLED	A1. FAILS OPEN B1. INTERNAL PART FAILURE	HOIST B WILL NOT BE OPERATE	DELAY IN OPERATIONS	3

FAILURE MODES AND EFFECTS ANALYSIS (FMEA) WORKSHEET

System: 30 TON BRIDGE CRANE **Program:** SPACE STATION **Facility/Station Set:** SSPF

Subsystem: ELECTRICAL CONTROLS, HOIST

Drawing No.: 101A16061 **Sheet No.:** 1 TO 20 **Page:** 84 **of 156** **Date:** 18 March, 2005

PMN: K61-2944 **Baseline:** 580.01 **Prepared by:** W. DiMeo, Boeing

FIND NO. PART NO.	PART NAME	PART FUNCTION	A. FAILURE MODE B. CAUSE C. FMN D. DETECTION METHOD E. CORRECTING ACTION F. TIME TO EFFECT G. TIMEFRAME	FAILURE EFFECT ON SYSTEM PERFORMANCE	FAILURE EFFECT ON FLIGHT HARDWARE AND/OR PERSONNEL SAFETY	CRIT CAT
FR4	N.O. CONTACTS IN SERIES WITH AC2 AUXILIARY RELAY COIL	WHEN CLOSED ENABLES AC2'S COIL	A1. FAILS OPEN B1. INTERNAL PART FAILURE	HOIST B WILL NOT OPERATE	DELAY IN OPERATION	3
			A2. FAILS CLOSED B2. INTERRNAL PART FAILURE	A FAULT AS SEEN BY MOTOR CONTROLLER WILL NOT OPEN AC2'S CIRCUIT BUT N2 (LINE CONTACTOR) WILL OPEN	DELAY IN OPERATION	3
FR2	N.O. CONTACTS IN SERIES WIITH N2 CONTACTOR	WHEN CLOSED ENABLES N2 COIL	A1. FAILS OPEN B1. INTERNAL PART FAILURE	HOIST B WILL NOT OPERATE	DELAY IN OPERATION	3
			A2. FAILS CLOSED B2. INTERNAL PART FAILURE	A FAULT AS SEEN BY MOTOR CONTROLLER WILL NOT OPEN N2'S CIRCUIT BUT AC2 WILL OPEN	DELAY IN OPERATIONS	3
D501	COIL SUPPRESION DIODE ACROSS FR2 COIL	REDUCES BACK EMF ACROSS FR2 COIL FOR INCREASED LIFE OF RELAY AND PREVENTION OF INTERMITTENT OPERATION	A1. FAILS OPEN B1. INTERNAL PART FAILURE	REDUCES LIFE/POSSIBLE INTERMITTENT OPERATION OF FR2 RELAY	NONE. REQUIRES MULTIPLE FAILURES	3
			A2. FAILS SHORTED B2. INTERNAL PART FAILURE	HOIST B WILL NOT OPERATE	DELAY IN OPERATIONS	3
BCR2	BRAKE CONTROL RELAY 2	WHEN NOT ENABLES BRAKE CONTACROR BC2 FOR BRAKE RELEASE	A1. FAILS OPEN B1. INTERNAL PART FAILURE	BRAKE FOR HOIST B WILL NOT RELEASE. HOIST INOPERATIVE	DELAY IN OPERATIONS	3

FAILURE MODES AND EFFECTS ANALYSIS (FMEA) WORKSHEET

System: 30 TON BRIDGE CRANE **Program:** SPACE STATION **Facility/Station Set:** SSPF

Subsystem: ELECTRICAL CONTROLS, HOIST

Drawing No.: 101A16061 **Sheet No.:** 1 TO 20 **Page:** 85 of 156 **Date:** 18 March, 2005

PMN: K61-2944 **Baseline:** 580.01 **Prepared by:** W. DiMeo, Boeing

FIND NO. PART NO.	PART NAME	PART FUNCTION	A. FAILURE MODE B. CAUSE C. FMN D. DETECTION METHOD E. CORRECTING ACTION F. TIME TO EFFECT G. TIMEFRAME	FAILURE EFFECT ON SYSTEM PERFORMANCE	FAILURE EFFECT ON FLIGHT HARDWARE AND/OR PERSONNEL SAFETY	CRIT CAT
BCR2	N.O. CONTACTS IN SERIES WITH BC2 (BRAKE CONTACTOR)	WHEN ENERGIZED ENABLES BRAKE CONTACTOR BC2 FOR BRAKE RELEASE	A1. FAILS OPEN B1. INTERNAL PART FAILURE	BRAKE FOR HOIST B WILL NOT RELEASE. HOIST INOPERATIVE	DELAY IN OPERATIONS	3
			A2. FAILS CLOSED B2. INTERNAL PART FAILURE	BRAKE CONTACTOR FOR HOIST B BRAKE WILL BE CONTINUOSLY ENABLED. LETTING UP ON DIRECTION SWITCH OR DEPRESSING E-STOP WILL HALT HOIST	NONE. REQUIRES MULTIPLE FAILURES	3
D502	COIL SUPPRESION DIODE ACROSS BCR2 COIL	REDUCES BACK EMF ACROSS BCR2 COIL FOR INCREASED LIFE OF RELAY AND PREVENTION OF INTERMITTENT OPERATION	A1. FAILS OPEN B1. INTERNAL PART FAILURE	REDUCES LIFE/POSSIBLE INTERMITTENT OPERATION OF BCR4 RELAY	NONE. REQUIRES MULTIPLE FAILURES	3
			A2. FAILS SHORTED B2. INTERNAL PART FAILURE	HOIST B WILL NOT OPERATE	DELAY IN OPERATIONS	3
ZSR2	ZERO SPEED RELAY COIL	WHEN ENRGIZED INDICATES HOIST B IS STOPPED	A1. FAILS OPEN B1. INTERNAL PART FAILURE	ZSR2 RELAY WILL NOT ENERGIZE. ZERO SPEED OFF HOIST A WILL NOT BE FLAGGED BY ZSR2 (WHICH INITIATES DRIVE DISABLE AND POWER REMOVAL VIA CONTACTOR N2. TIME DELAY RELAY WILL TIME OUT. HOWEVER, INITIATING ABOVE ACTION	NONE. REQUIRES MULTIPLE FAILURES	3
	ZERO SPEED RELAY COIL	N.C. CONTACTS IN SERIES WITH ER2 COIL	A1. FAILS OPEN B1. INTERNAL PART FAILURE	HOIST B INOPERATIVE	DELAY IN OPERATIONS	3
			A2. FAILS CLOSED B2. INTERNAL PART FAILURE	HOIST B DRIVE CONTINUOSLY ENABLED	NONE. REQUIRES MULTIPLE FAILURES	3

FAILURE MODES AND EFFECTS ANALYSIS (FMEA) WORKSHEET

System: 30 TON BRIDGE CRANE **Program:** SPACE STATION **Facility/Station Set:** SSPF

Subsystem: ELECTRICAL CONTROLS, HOIST

Drawing No.: 101A16061 **Sheet No.:** 1 TO 20 **Page:** 86 **of 156** **Date:** 18 March, 2005

PMN: K61-2944 **Baseline:** 580.01 **Prepared by:** W. DiMeo, Boeing

FIND NO. PART NO.	PART NAME	PART FUNCTION	A. FAILURE MODE B. CAUSE C. FMN D. DETECTION METHOD E. CORRECTING ACTION F. TIME TO EFFECT G. TIMEFRAME	FAILURE EFFECT ON SYSTEM PERFORMANCE	FAILURE EFFECT ON FLIGHT HARDWARE AND/OR PERSONNEL SAFETY	CRIT CAT
D503	COIL SUPPRESION DIODE ACROSS ZSR4 COIL	REDUCES BACK EMF ACROSS ZSR2 COIL FOR INCREASED LIFE OF RELAY AND PREVENTION OF INTERMITTENT OPERATION	A1. FAILS OPEN B1. INTERNAL PART FAILURE	REDUCES LIFE/POSSIBLE INTERMITTENT OPERATION OF BCR2 RELAY	NONE. REQUIRES MULTIPLE FAILURES	3
			A2. FAILS SHORTED B2. INTERNAL PART FAILURE	ZSR2 RELAY WILL NOT ENERGIZE. HOIST B ZERO SPEED WILL NOT BE DETECTED	NONE. REQUIRES MULTIPLE FAILURES	3
CB501	CIRCUIT BREAKER 3 POLE	CONTROLS POWER APPLICATIONS TO MOTOR CONTROLLER B BRAKE B, AN MOTOR B POWER	A1. FAILS OPEN B1. INTERNAL PART FAILURE	HOIST B INOPERATIVE	DELAY IN OPERATIONS	3
			A2. FAILS TO OPEN B2. INTERNAL PART FAILURE	BRAKER UPSTREAM WILL OPEN CIRCUIT	DELAY IN OPERATIONS	3
FU501, FU502, FU503	LINE FUSE 3, ONE FOR EACH A.C. INPUT LINE	PROTECTS CIRCUIT FROM OVERLOAD	A1. FAILS PREMATURLEY B1. INTERNAL PART FAILURE	HOIST B INOPERATIVE	DELAY IN OPERATIONS	3
			A2. FAILS TO OPEN B2. INTERNAL PART FAILURE	HOIST B DRIVE CONTINUOSLY ENABLED	DELAY IN OPERATIONS	3
NONE	STEP DOWN TRANSFORMER FOR HOIST B MOTOR CONTROLLER	STEPS DOWN IMP VOLTAGE FROM 460VAC TO 120VAC FOR MOTOR CONTROLLER	A1. FAILS OPEN B1. INTERNAL PART FAILURE	HOIST BMOTOR WILL NOT IOPERATE	DELAY IN OPERATIONS	3
			A2. FAILS CLOSED B2. INTERNAL PART FAILURE	INPUT FUSES TO PRIMARY CIRCUIT WILL OPEN. HOIST B WILL NOT OPERATE	DELAY IN OPERATIONS	3

FAILURE MODES AND EFFECTS ANALYSIS (FMEA) WORKSHEET

System: 30 TON BRIDGE CRANE **Program:** SPACE STATION **Facility/Station Set:** SSPF

Subsystem: ELECTRICAL CONTROLS, HOIST

Drawing No.: 101A16061 **Sheet No.:** 1 TO 20 **Page:** 87 of 156 **Date:** 18 March, 2005

PMN: K61-2944 **Baseline:** 580.01 **Prepared by:** W. DiMeo, Boeing

FIND NO. PART NO.	PART NAME	PART FUNCTION	A. FAILURE MODE B. CAUSE C. FMN D. DETECTION METHOD E. CORRECTING ACTION F. TIME TO EFFECT G. TIMEFRAME	FAILURE EFFECT ON SYSTEM PERFORMANCE	FAILURE EFFECT ON FLIGHT HARDWARE AND/OR PERSONNEL SAFETY	CRIT CAT
FU505, FU506	FUSES IN SERIES WITH INPUT LINES TO PRIMARY OF STEP-DOWN TRANSFORMER	PROTECTS HOIST B CONTROLLER/TRANSFORME R MER FROM SHORT CIRCUIT	A1. FAILS PREMATURLEY B1. INTERNAL PART FAILURE	HOIST B INOPERATIVE	DELAY IN OPERATIONS	3
			A2. FAILS TO OPEN B2. INTERNAL PART FAILURE	UPSTREAM BREAKER WILL OPEN IF EITHER OF THESE FUSES FAIL TO OPERATE	DELAY IN OPERATIONS	3
MOV501	METAL OXIDE VARISTOR	PROTECTS HOIST B CONTROLLER FROM SURGE CURRENT	A1. OPERATES PREMATURELY B1. INTERNAL PART FAILURE	NONE	NONE. REQUIRES MULTIPLE FAILURES	3
			A2. FAILS TO OPERATE B2. INTERNAL PART FAILURE	POSSIBLE DAMAGE TO HOIST B CONTROLLER	DELAY IN OPERATIONS	3
FU507	FUSE IN LINE WITH SECONDARY OUTPUT OF STEP-DOWN TRANSFORMER	PROTECTS STEPDOWN TRANSFORMER FROM DOWN STREAM OVERLOAD	A1. OPERATES PREMATURLEY B1. INTERNAL PART FAILURE	HOIST B WILL NOT OPERATE	DELAY IN OPERATIONS	3
			A2. FAILS TO OPERATE B2. INTERNAL PART FAILURE	DOWN STREAM BREAKER WILL OPEN CIRCUIT FOR PROTECTION	DELAY IN OPERATIONS	3
NONE	HOIST B SPEED CONTROL	POTENTIOMETER USED FOR SELECTING HOIST B SPEED	A1. FAILS OPEN B1. INTERNAL PART FAILURE	HOIST B WILL NOT OPERATE	DELAY IN OPERATION	3
			A2. FAILS TO CLOSED B2. INTERNAL PART FAILURE	HOIST B WILL ONLY RUN AT ONE SPEED WITHIN RANGE SELECTED	DELAY IN OPERATIONS	3
FU504	FUSE IN LINE WITH BRIDGE MOTOR ARMATURE	PROTECTS POWER SECTION OF CONTROLLER FROM OVERLOAD CONDITIONS	A1. FAILS PREMATURLEY B1. INTERNAL PART FAILURE	HOIST B WILL NOT OPERATE	DELAY IN OPERATIONS	3
			A2. FAILS TO OPEN B2. INTERNAL PART FAILURE	DOWN STREAM BREAKER WILL OPEN CIRCUIT FOR PROTECTION	DELAY IN OPERATIONS	3

FAILURE MODES AND EFFECTS ANALYSIS (FMEA) WORKSHEET

System: 30 TON BRIDGE CRANE **Program:** SPACE STATION **Facility/Station Set:** SSPF

Subsystem: ELECTRICAL CONTROLS, HOIST

Drawing No.: 101A16061 **Sheet No.:** 1 TO 20 **Page:** 88 **of 156** **Date:** 18 March, 2005

PMN: K61-2944 **Baseline:** 580.01 **Prepared by:** W. DiMeo, Boeing

FIND NO. PART NO.	PART NAME	PART FUNCTION	A. FAILURE MODE B. CAUSE C. FMN D. DETECTION METHOD E. CORRECTING ACTION F. TIME TO EFFECT G. TIMEFRAME	FAILURE EFFECT ON SYSTEM PERFORMANCE	FAILURE EFFECT ON FLIGHT HARDWARE AND/OR PERSONNEL SAFETY	CRIT CAT
FU508, FU509	FUSES IN A.C. LINE OF HOIST B BRAKE RECTIFIER CONTROLLER	PROTECTS HOST B BRAKE SOLENOIDS FROM ELECTRICAL DAMAGE	A1. OPERATES PREMATURELY B1. INTERNAL PART FAILURE	HOIST B BRAKE WILL NOT RELEASE. HOIST INOPERATIVE	DELAY IN OPERATIONS	3
			A2. FAILS TO OPERATE B2. INTERNAL PART FAILURE	POSSIBLE DAMAGE TO HOIST B BRAKE RECTIFIER CONTROLLER	DELAY IN OPERATIONS	3
NONE	HOIST B DC BRAKE COIL	WHEN ENERGIZED CAUSES HOIST B BREAK RELEASE	A1. FAILS TO OPEN B1. INTERNAL PART FAILURE	HOIST B BRAKE WILL NOT OPERATE	DELAY IN OPERATION	3
NONE	HOIST B LINE ENCODER	ENCODES HOIST B MOTOR ARMATURE LOCATION INDICATION INTO DIGITAL FORMAT FOR MOTOR CONTROLLER	A1. INCORRECT OUTPUT B1. INTERNAL PART FAILURE	HOIST B MOTOR CONTROLLER WILL NOT KNOW HOIST B LOCATION	NONE. REQUIRES MULTIPLE FAILURES	3
			A2. NO OUTPUT B2. INTERNAL PART FAILURE	HOIST B MOTOR CONTROLLER WILL NOT KNOW HOIST LOCATIONPOSSIBLE DAMAGE TO HOIST B BRAKE RECTIFIER CONTROLLER	NONE. REQUIRES MULTIPLE FAILURES	3
HAJ4	HOIST A MOTOR CONTROLLER	THROUGH EXTERNAL HOIST CONTROL LOGIC (RELAYS) CONTROLS POWER TO HOIST MOTOR BY MONITORING TORQUE, SPEED, LOAD AND BRAKE CONDITIONS	A1.INO OUTPUT B1. INTERNAL PART FAILURE	SEE SEPARATE SECTION COVERING MOTOR CONTROLLER SUB-SYSTEM	DELAY IN OPERATION	3
			A2. INCORRECT OUTPUT (INCORRECT LEVEL) B2. INTERNAL PART FAILURE	SEE SEPARATE SECTION COVERING MOTOR CONTROLLER SUB-SYSTEM	NONE. REQUIRES MULTIPLE FAILURES	3

FAILURE MODES AND EFFECTS ANALYSIS (FMEA) WORKSHEET

System: 30 TON BRIDGE CRANE **Program:** SPACE STATION **Facility/Station Set:** SSPF

Subsystem: ELECTRICAL CONTROLS, HOIST

Drawing No.: 101A16061 **Sheet No.:** 1 TO 20 **Page:** 89 **of 156** **Date:** 18 March, 2005

PMN: K61-2944 **Baseline:** 580.01 **Prepared by:** W. DiMeo, Boeing

FIND NO. PART NO.	PART NAME	PART FUNCTION	A. FAILURE MODE B. CAUSE C. FMN D. DETECTION METHOD E. CORRECTING ACTION F. TIME TO EFFECT G. TIMEFRAME	FAILURE EFFECT ON SYSTEM PERFORMANCE	FAILURE EFFECT ON FLIGHT HARDWARE AND/OR PERSONNEL SAFETY	CRIT CAT
FR1	N.O. CONTACTS IN SERIES WITH AC1 AUXILIARY RELAY COIL	WHEN CLOSED ENABLES AC1'S COIL	A1. FAILS OPEN B1. INTERNAL PART FAILURE	HOIST A WILL NOT OPERATE	DELAY IN OPERATIONS	3
			A2. FAILS CLOSED B2. INTERNAL PART FAILURE	A FAULT AS SEEN BY MOTOR CONTROLLER WILL NOT OPEN AC1'S CIRCUIT BUT N1 (LINE CONTACTOR) WILL OPEN	DEAL IN OPERATIONS	3
	N.O. CONTACTS IN SERIES WITH N1 CONTACTOR COIL	WHEN CLOSED ENABLES N1 COIL	A1. FAILS OPEN B1. INTERNAL PART FAILURE	HOIST A WILL NOT OPERATE	DELAY IN OPERATIONS	3
			A2. FAILS CLOSED B2. INTERNAL PART FAILURE	A FAULT AS SEEN BY MOTOR CONTROLLER WILL NOT OPEN N1'S CIRCUIT BUT AC1 WILL OPEN	DEAL IN OPERATIONS	3
D101	COIL SUPPRESION DIODE ACROSS FR1 COIL	REDUCES BACK EMF ACROSS FR1 COIL FOR INCREASED LIFE OF RELAY AND PREVENTION OF INTERMITTENT OPERATION	A1. FAILS OPEN B1. INTERNAL PART FAILURE	REDUCES LIFE/POSSIBLE INTERMITTENT OPERATION OF FR1 RELAY	NONE. REQUIRES MULTIPLE FAILURES	3
			A2. FAILS SHORTED B2. INTERNAL PART FAILURE	HOIST WILL NOT OPERATE	DEAL IN OPERATIONS	3
BCR1	BRAKE CONTROL RELAY COIL	WHEN ENERGIZED ENABLES BRAKE CONTACTOR BC1 FOR BRAKE RELEASE	A1. FAILS OPEN B1. INTERNAL PART FAILURE	BRAKE FOR HOIST A WILL NOT RELEASE. HOIST INOPERATIVE	DELAY IN OPERATIONS	3

FAILURE MODES AND EFFECTS ANALYSIS (FMEA) WORKSHEET

System: 30 TON BRIDGE CRANE **Program:** SPACE STATION **Facility/Station Set:** SSPF

Subsystem: ELECTRICAL CONTROLS, HOIST

Drawing No.: 101A16061 **Sheet No.:** 1 TO 20 **Page:** 90 **of 156** **Date:** 18 March, 2005

PMN: K61-2944 **Baseline:** 580.01 **Prepared by:** W. DiMeo, Boeing

FIND NO. PART NO.	PART NAME	PART FUNCTION	A. FAILURE MODE B. CAUSE C. FMN D. DETECTION METHOD E. CORRECTING ACTION F. TIME TO EFFECT G. TIMEFRAME	FAILURE EFFECT ON SYSTEM PERFORMANCE	FAILURE EFFECT ON FLIGHT HARDWARE AND/OR PERSONNEL SAFETY	CRIT CAT
BCR1	N.O. CONTACTS IN SERIES WITH BC1 (BRAKE CONTACTOR)	WHEN ENERGIZED ENABLES BRAKE CONTACTOR BC1 FOR BRAKE RELEASE	A1. FAILS OPEN B1. INTERNAL PART FAILURE	BRAKE FOR HOIST A WILL NOT RELEASE. HOIST INOPERATIVE	DELAY IN OPERATIONS	3
			A2. FAILS CLOSED B2. INTERNAL PART FAILURE	BRAKE CONTACTOR FOR HOIST A BRAKE WILL BE CONTINUOSLY ENABLED. LETTING UP ON DIRECTION SWITCH OR DEPRESSING E-STOP WILL HALT HOIST. REDUCE LIFE/POSSIBLE INTERMITTENT OPERATION OF BCR4 RELAY	NONE. REQUIRES MULTIPLE FAILURES	3
D102	COIL SUPPRESION DIODE ACROSS BCR1 COIL	REDUCES BACK EMF ACROSS BCR1 COIL FOR INCREASED LIFE OF RELAY AND PREVENTION OF INTERMITTENT OPERATION	A1. FAILS OPEN B1. INTERNAL PART FAILURE	REDUCES LIFE/POSSIBLE INTERMITTENT OPERATION OF BCR4 RELAY	NONE. REQUIRES MULTIPLE FAILURES	3
			A2. FAILS SHORTED B2. INTERNAL PART FAILURE	HOIST WILL NOT OPERATE	DEAL IN OPERATIONS	3
ZSR1	ZERO SPEED RELAY COIL	WHEN ENERGIZED INDICATES HOIST A IS STOPPED	A1. FAILS OPEN B1. INTERNAL PART FAILURE	ZSR1 RELAY WILL NOT ENERGIZE. ZERO SPEED OF HOIST A WILL NOT BE FLAGGED BY ZSR1 (WHICH INITIATES DRIVE DISABLE AND POWER REMOVAL VIA CONTACTOR N1. TIME DELAY RELAY WILL TIME OUT INITIATING ABOVE ACTION	NONE. REQUIRES MULTIPLE FAILURES	3
	N.O. CONTACTS IN SERIES WITH ER1 COIL	WHEN ENERGIZED INDICATES HOIST A IS STOPPED AND ENABLES ER1 (DRIVE A ENABLE RELAY)	A1. FAILS OPEN B1. INTERNAL PART FAILURE	HOIST A INOPERATIVE	DELAY IN OPERATIONS	3

FAILURE MODES AND EFFECTS ANALYSIS (FMEA) WORKSHEET

System: 30 TON BRIDGE CRANE **Program:** SPACE STATION **Facility/Station Set:** SSPF

Subsystem: ELECTRICAL CONTROLS, HOIST

Drawing No.: 101A16061 **Sheet No.:** 1 TO 20 **Page:** 91 **of 156** **Date:** 18 March, 2005

PMN: K61-2944 **Baseline:** 580.01 **Prepared by:** W. DiMeo, Boeing

FIND NO. PART NO.	PART NAME	PART FUNCTION	A. FAILURE MODE B. CAUSE C. FMN D. DETECTION METHOD E. CORRECTING ACTION F. TIME TO EFFECT G. TIMEFRAME	FAILURE EFFECT ON SYSTEM PERFORMANCE	FAILURE EFFECT ON FLIGHT HARDWARE AND/OR PERSONNEL SAFETY	CRIT CAT
D103	COIL SUPPRESION DIODE ACROSS ZSR1 COIL	REDUCES BACK EMF ACROSS ZSR1 COIL FOR INCREASED LIFE OF RELAY AND PREVENTION OF INTERMITTENT OPERATION	A1. FAILS OPEN B1. INTERNAL PART FAILURE	REDUCES LIFE/POSSIBLE INTERMITTENT OPERATION OF ZSR1 RELAY	NONE. REQUIRES MULTIPLE FAILURES	3
			A2. FAILS SHORTED B2. INTERNAL PART FAILURE	ZSR1 RELAY WILL NOT ENERGIZE. ZERO SPEED OF HOIST A WILL NOT BE FLAGGED BY ZSR1 (WHICH INITIATES DRIVE DISABLE AND POWER REMOVAL VIA CONTACTOR N1. TIME DELAY RELAY WILL TIME OUT INITIATING ABOVE ACTION HOIST WILL NOT OPERATE	NONE. REQUIRES MULTIPLE FAILURES	3
CB101	CIRCUIT BREAKER 3 POLE	CONTROLS POWER APPLICATIONS TO MOTOR CONTROLLER A BRAKE A, AN MOTOR A POWER	A1. FAILS OPEN B1. INTERNAL PART FAILURE	HOIST A INOPERATIVE	DELAY IN OPERATIONS	3
			A2. FAILS TO OPEN B2. INTERNAL PART FAILURE	BRAKER UPSTREAM WILL OPEN CIRCUIT	DELAY IN OPERATIONS	3
FU101, FU102, FU103	LINE FUSE 3, ONE FOR EACH A.C. INPUT LINE	PROTECTS CIRCUIT FROM OVERLOAD	A1. FAILS PREMATURLEY B1. INTERNAL PART FAILURE	HOIST A WILL NOT OPERATE	DELAY IN OPERATIONS	3
			A2. FAILS TO OPEN B2. INTERNAL PART FAILURE	CIRCUIT BREAKER UPSTREAM WILL OPEN	DELAY IN OPERATIONS	3
NONE	STEP DOWN TRANSFORMER FOR HOIST A MOTOR CONTROLLER	STEPS DOWN INP VOLTAGE FROM 460VAC TO 120VAC FOR MOTOR CONTROLLER	A1. FAILS OPEN B1. INTERNAL PART FAILURE	HOIST A MOTOR WILL NOT OPERATE	DELAY IN OPERATIONS	3
			A2. FAILS CLOSED B2. INTERNAL PART FAILURE	INPUT FUSES TO PRIMARY CIRCUIT WILL OPEN. HOIST A WILL NOT OPERATE. HOIST A INOPERATIVE	DELAY IN OPERATIONS	3

FAILURE MODES AND EFFECTS ANALYSIS (FMEA) WORKSHEET

System: 30 TON BRIDGE CRANE **Program:** SPACE STATION **Facility/Station Set:** SSPF

Subsystem: ELECTRICAL CONTROLS, HOIST

Drawing No.: 101A16061 **Sheet No.:** 1 TO 20 **Page:** 92 **of 156** **Date:** 18 March, 2005

PMN: K61-2944 **Baseline:** 580.01 **Prepared by:** W. DiMeo, Boeing

FIND NO. PART NO.	PART NAME	PART FUNCTION	A. FAILURE MODE B. CAUSE C. FMN D. DETECTION METHOD E. CORRECTING ACTION F. TIME TO EFFECT G. TIMEFRAME	FAILURE EFFECT ON SYSTEM PERFORMANCE	FAILURE EFFECT ON FLIGHT HARDWARE AND/OR PERSONNEL SAFETY	CRIT CAT
FU105, FU106	FUSES IN SERIES WITH INPUT LINES TO PRIMARY OF STEP-DOWN TRANSFORMER	PROTECTS HOIST A CONTROLLER/TRANSFORME R MER FROM SHORT CIRCUIT	A1. FAILS PREMATURLEY B1. INTERNAL PART FAILURE	HOIST A INOPERATIVE	DELAY IN OPERATIONS	3
			A2. FAILS TO OPEN B2. INTERNAL PART FAILURE	UPSTREAM BREAKER WILL OPEN IF EITHER OF THESE FUSES FAIL TO OPERATE	DELAY IN OPERATIONS	3
MOV101	METAL OXIDE VARISTOR	PROTECTS HOIST A CONTROLLER FROM SURGE CURRENT	A1. OPERATES PREMATURELY B1. INTERNAL PART FAILURE	NONE	NONE. REQUIRES MULTIPLE FAILURES	3
			A2. FAILS TO OPERATE B2. INTERNAL PART FAILURE	POSSIBLE DAMAGE TO HOIST A CONTROLLER	DELAY IN OPERATIONS	3
FU107	FUSE IN LINE WITH SECONDARY OUTPUT OF STEP-DOWN TRANSFORMER	PROTECTS STEPDOWN TRANSFORMER FROM DOWN STREAM OVERLOAD	A1. OPERATES PREMATURLEY B1. INTERNAL PART FAILURE	HOIST A WILL NOT OPERATE	DELAY IN OPERATIONS	3
			A2. FAILS TO OPERATE B2. INTERNAL PART FAILURE	DOWN STREAM BREAKER WILL OPEN CIRCUIT FOR PROTECTION	DELAY IN OPERATIONS	3
NONE	HOIST A SPEED CONTROL	POTENTIOMETER USED FOR SELECTING HOIST A SPEED	A1. FAILS OPEN B1. INTERNAL PART FAILURE	HOIST B WILL NOT OPERATE	DELAY IN OPERATION	3
			A2. FAILS TO CLOSED B2. INTERNAL PART FAILURE	HOIST A WILL ONLY RUN AT ONE SPEED WITHIN RANGE SELECTED	DELAY IN OPERATIONS	3
FU104	FUSE IN LINE WITH BRIDGE MOTOR ARMATURE	PROTECTS POWER SECTION OF CONTROLLER FROM OVERLOAD CONDITIONS	A1. OPERATES PREMATURLEY B1. INTERNAL PART FAILURE	HOIST A WILL NOT OPERATE	DELAY IN OPERATIONS	3
			A2. FAILS TO OPERATE B2. INTERNAL PART FAILURE	DOWN STREAM BREAKER WILL OPEN CIRCUIT FOR PROTECTION	DELAY IN OPERATIONS	3

FAILURE MODES AND EFFECTS ANALYSIS (FMEA) WORKSHEET

System: 30 TON BRIDGE CRANE **Program:** SPACE STATION **Facility/Station Set:** SSPF

Subsystem: ELECTRICAL CONTROLS, HOIST

Drawing No.: 101A16061 **Sheet No.:** 1 TO 20 **Page:** 93 **of 156** **Date:** 18 March, 2005

PMN: K61-2944 **Baseline:** 580.01 **Prepared by:** W. DiMeo, Boeing

FIND NO. PART NO.	PART NAME	PART FUNCTION	A. FAILURE MODE B. CAUSE C. FMN D. DETECTION METHOD E. CORRECTING ACTION F. TIME TO EFFECT G. TIMEFRAME	FAILURE EFFECT ON SYSTEM PERFORMANCE	FAILURE EFFECT ON FLIGHT HARDWARE AND/OR PERSONNEL SAFETY	CRIT CAT
FU108, FU109	FUSES IN A.C. LINE OF HOIST B BRAKE RECTIFIER CONTROLLER	PROTECTS HOST A BRAKE SOLENOIDS FROM ELECTRICAL DAMAGE	A1. OPERATES PREMATURELY B1. INTERNAL PART FAILURE	HOIST A BRAKE WILL NOT RELEASE. HOIST INOPERATIVE	DELAY IN OPERATIONS	3
			A2. FAILS TO OPERATE B2. INTERNAL PART FAILURE	POSSIBLE DAMAGE TO HOIST A BRAKE RECTIFIER CONTROLLER	DELAY IN OPERATIONS	3
NONE	HOIST A BRAKE RECTIFIER/ CONTROLLER	PROVIDES D.C. FOR HOIST A BRAKE COIL	A1. NO OUTPUT B1. INTERNAL PART FAILURE	HOIST A BRAKE WILL NOT RELEASE	DELAY IN OPERATION	3
			A2. INCORRECT OUTPUT B2. INTERNAL PART FAILURE	INTERMITTENT BRAKE OPERATION. CONTROLLERBRAKE ACKNOWLEDGE CIRCUIT WILL SENSE BRAKE ACTION AND SHUT DOWN DRIVE. E-STOP WILL ALSO STOP OPERATION	NONE. REQUIRES MULTIPLE FAILURES	3
	HOIST A DC BRAKE COIL	WHEN ENERGIZED CAUSES HOIST A BRAKE TO RELEASE	A1. FAILS OPEN B1. INTERNAL PART FAILURE	HOIST A BRAKE WILL NOT RELEASE	DELAY IN OPERATION	3
	HOIST A LINE ENCODER	ENCODES HOIST A MOTOR ARMATURE LOCATION INDICATION INTO DIGITAL FORMAT FOR MOTOR CONTROLLER	A1. INCORRECT OUTPUT B1. INTERNAL PART FAILURE	HOIST A MOTOR CONTROLLER WILL NOT KNOW HOIST A POSITION	NONE. REQUIRES MULTIPLE FAILURES	3
			A2. NO OUTPUT B2. INTERNAL PART FAILURE	HOSIT A MOTOR CONTROLLER WILL NOT KNOW HOIST A POSITION	NONE. REQUIRES MULTIPLE FAILURES	3

FAILURE MODES AND EFFECTS ANALYSIS (FMEA) WORKSHEET

System: 30 TON BRIDGE CRANE **Program:** SPACE STATION **Facility/Station Set:** SSPF

Subsystem: ELECTRICAL CONTROLS, HOIST

Drawing No.: 101A16061 **Sheet No.:** 1 TO 20 **Page:** 94 of 156 **Date:** 18 March, 2005

PMN: K61-2944 **Baseline:** 580.01 **Prepared by:** W. DiMeo, Boeing

FIND NO. PART NO.	PART NAME	PART FUNCTION	A. FAILURE MODE B. CAUSE C. FMN D. DETECTION METHOD E. CORRECTING ACTION F. TIME TO EFFECT G. TIMEFRAME	FAILURE EFFECT ON SYSTEM PERFORMANCE	FAILURE EFFECT ON FLIGHT HARDWARE AND/OR PERSONNEL SAFETY	CRIT CAT
E-STOP	6 REMOTE E-STOPS LOCATED THROUGHOUT HI-BAY	WHEN CLOSED ENERGIZES SHUNT TRIP REMOVING CRANE FACILITY POWER	A1. FAILS OPEN (ANY OF THEM) B1. INTERNAL PART FAILURE	EFFECTED E-STOP WILL NOT OPERATE SHUNT TRIP TO REMOVE POWER FROM CRANE. OTHER E-STOPS WILL	NONE. REQUIRES MULTIPLE FAILURES	3
			A2. INCORRECT OUTPUT B2. INTERNAL PART FAILURE	CRANE INOPERATIVE	DELAY IN OPERATIONS	3
DIU	HOIST A DIGITAL INTERFACE UNIT	PROVIDES SIGNAL CONDITIONING FOR HOIST POSITION INDICATOR AND PROVIDES DATA COMMUNICATIONS BETWEEN LINE ENCODER AND REGULATOR CONTROL BOARD	A1. NO OUTPUT B1. INTERNAL PART FAILURE	HOIST A MOTOR CONTROLLER WILL NOT KNOW HOIST A POSITION	NONE. REQUIRES MULTIPLE FAILURES	3
			A2. INCORRECT OUTPUT B2. INTERNAL PART FAILURE	ERRONEOUS HOIST A POSITION DATA TO REGULATOR CONTROL BOARD. E-STOP CAN HALT CRANE OPERATIONS	NONE. REQUIRES MULTIPLE FAILURES	3
IPS	HOIST A INTERFACE POWER BOARD	PROVIDES POWER TO OTHER CONTROLLER COMPONENTS AND TO SHUNT FIELD	A1. NO OUTPUT B1. INTERNAL PART FAILURE	HOIST A INOPERATIVE	NONE. REQUIRES MULTIPLE FAILURES	3
			A2. INCORRECT OUTPUT B2. INTERNAL PART FAILURE	INTERMITTENT HOSIT A OPERATION	NONE. REQUIRES MULTIPLE FAILURES	3

FAILURE MODES AND EFFECTS ANALYSIS (FMEA) WORKSHEET

System: 30 TON BRIDGE CRANE **Program:** SPACE STATION **Facility/Station Set:** SSPF

Subsystem: ELECTRICAL CONTROLS, HOIST

Drawing No.: 101A16061 **Sheet No.:** 1 TO 20 **Page:** 95 **of 156** **Date:** 18 March, 2005

PMN: K61-2944 **Baseline:** 580.01 **Prepared by:** W. DiMeo, Boeing

FIND NO. PART NO.	PART NAME	PART FUNCTION	A. FAILURE MODE B. CAUSE C. FMN D. DETECTION METHOD E. CORRECTING ACTION F. TIME TO EFFECT G. TIMEFRAME	FAILURE EFFECT ON SYSTEM PERFORMANCE	FAILURE EFFECT ON FLIGHT HARDWARE AND/OR PERSONNEL SAFETY	CRIT CAT
SOB	HOIST A SNUBBER OVERVOLTAGE BOARD	PROVIDES TRANSIENT OVER VOLTAGE PROTECTION TO MOTOR CONTROLLER CIRCUIT	A1. FAILS TO OPERATE B1. INTERNAL PART FAILURE	POSIBLE DAMAGE TO MOTOR CONTROLLER CIRCUITS	NONE. REQUIRES MULTIPLE FAILURES	3
			A2. PREMATURE OPERATION B2. INTERNAL PART FAILURE	NONE	NONE. REQUIRES MULTIPLE FAILURES	3
EIB 200	HOIST A ELECTRICAL INTERFACE BOARD	PROVIDES INTERFACE BETWEEN HOIST A SPEED INDICATOR RCB BOARD	A1. NO OUTPUT B1. INTERNAL PART FAILURE	NO HOIST A SPEED INDICATOR	NONE. REQUIRES MULTIPLE FAILURES	3
			A2. INCORRECT OUTPUT B2. INTERNAL PART FAILURE	INCORRECT HOSIT A SPEED INDICATOR	NONE. REQUIRES MULTIPLE FAILURES	3
RCB	HOIST A REGULATOR CONTROL BOARD	PROVIDES INTERFACE FOR KEYBOARD AND DISPLAY, CENTRAL PROCESSING UNIT, POWER SUPPLY MONITORING AND ANALOG TO DIGITAL INTERFACE	A1. FAILS TO OPERATE B1. INTERNAL PART FAILURE	HOIST A MOTOR CONTROLLER INOPERATIVE. E-STOP WILL HAULT CRANE OPERATIONS	NONE. REQUIRES MULTIPLE FAILURES	3
			A2. INCORRECT OUTPUT B2. INTERNAL PART FAILURE	HOIST A MOTOR CONTROLLER INOPERATIVE. E-STOP WILL HAULT CRANE OPERATIONS	NONE. REQUIRES MULTIPLE FAILURES	3

FAILURE MODES AND EFFECTS ANALYSIS (FMEA) WORKSHEET

System: 30 TON BRIDGE CRANE **Program:** SPACE STATION **Facility/Station Set:** SSPF

Subsystem: ELECTRICAL CONTROLS, HOIST

Drawing No.: 101A16061 **Sheet No.:** 1 TO 20 **Page:** 96 **of 156** **Date:** 18 March, 2005

PMN: K61-2944 **Baseline:** 580.01 **Prepared by:** W. DiMeo, Boeing

FIND NO. PART NO.	PART NAME	PART FUNCTION	A. FAILURE MODE B. CAUSE C. FMN D. DETECTION METHOD E. CORRECTING ACTION F. TIME TO EFFECT G. TIMEFRAME	FAILURE EFFECT ON SYSTEM PERFORMANCE	FAILURE EFFECT ON FLIGHT HARDWARE AND/OR PERSONNEL SAFETY	CRIT CAT
NONE	HOIST A RELAY BOARD	PROVIDES RELAY FUNCTIONS REQUIRED FOR EXTERNAL ELECTRICAL CONTROL	A1. FAILS TO OPERATE B1. INTERNAL PART FAILURE	IMPROPER HOIST A SEQUENCE. E-STOP WILL STOP CRANE	NONE. REQUIRES MULTIPLE FAILURES	3
			A2. INCORRECT OUTPUT B2. INTERNAL PART FAILURE	INPROPER HOIST A SEQUENCE. E-STOP WILL HALT CRANE	NONE. REQUIRES MULTIPLE FAILURES	3
	HOIST A DDA POWER SECTION	SUPPLIES CONTROLLER POWER TO BRIDGE MOTOR ARMATURE	A1. FAILS TO OPERATE B1. INTERNAL PART FAILURE	HOIST A INOPERATIVE	NONE. REQUIRES MULTIPLE FAILURES	3
			A2. INCORRECT OUTPUT B2. INTERNAL PART FAILURE	INPROPER HOIST A MOVEMENT. E-STOP WILL HALT OPERATION	NONE. REQUIRES MULTIPLE FAILURES	3
DIU	HOIST B DIGITAL INTERFACE UNIT	PROVIDES SIGNAL CONDITIONING FOR HOIST POSITION INDICATOR AND PROVIDES DATA COMMUNICATIONS BETWEEN LINE ENCODER AND REGULATOR CONTROL BOARD	A1. NO OUTPUT B1. INTERNAL PART FAILURE	HOIST B MOTOR CONTROLLER WILL NOT KNOW HOIST B POSITION	NONE. REQUIRES MULTIPLE FAILURES	3
			A2. INCORRECT OUTPUT B2. INTERNAL PART FAILURE	ERRONEOUS HOIST B POSITION DATA TO REGULATOR CONTROL BOARD. E-STOP CAN HALT CRANE OPERATIONS	NONE. REQUIRES MULTIPLE FAILURES	3

FAILURE MODES AND EFFECTS ANALYSIS (FMEA) WORKSHEET

System: 30 TON BRIDGE CRANE **Program:** SPACE STATION **Facility/Station Set:** SSPF

Subsystem: ELECTRICAL CONTROLS, HOIST

Drawing No.: 101A16061 **Sheet No.:** 1 TO 20 **Page:** 97 **of** 156 **Date:** 18 March, 2005

PMN: K61-2944 **Baseline:** 580.01 **Prepared by:** W. DiMeo, Boeing

FIND NO. PART NO.	PART NAME	PART FUNCTION	A. FAILURE MODE B. CAUSE C. FMN D. DETECTION METHOD E. CORRECTING ACTION F. TIME TO EFFECT G. TIMEFRAME	FAILURE EFFECT ON SYSTEM PERFORMANCE	FAILURE EFFECT ON FLIGHT HARDWARE AND/OR PERSONNEL SAFETY	CRIT CAT
NONE	HOIST A RELAY BOARD	PROVIDES RELAY FUNCTIONS REQUIRED FOR EXTERNAL ELECTRICAL CONTROL	A1. FAILS TO OPERATE B1. INTERNAL PART FAILURE	IMPROPER HOIST A SEQUENCE. E-STOP WILL STOP CRANE	NONE. REQUIRES MULTIPLE FAILURES	3
			A2. INCORRECT OUTPUT B2. INTERNAL PART FAILURE	INPROPER HOIST A SEQUENCE. E-STOP WILL HALT CRANE	NONE. REQUIRES MULTIPLE FAILURES	3
	HOIST A DDA POWER SECTION	SUPPLIES CONTROLLER POWER TO BRIDGE MOTOR ARMATURE	A1. FAILS TO OPERATE B1. INTERNAL PART FAILURE	HOIST A INOPERATIVE	NONE. REQUIRES MULTIPLE FAILURES	3
			A2. INCORRECT OUTPUT B2. INTERNAL PART FAILURE	INPROPER HOIST A MOVEMENT. E-STOP WILL HALT OPERATION	NONE. REQUIRES MULTIPLE FAILURES	3
DIU	HOIST B DIGITAL INTERFACE UNIT	PROVIDES SIGNAL CONDITIONING FOR HOIST POSITION INDICATOR AND PROVIDES DATA COMMUNICATIONS BETWEEN LINE ENCODER AND REGULATOR CONTROL BOARD	A1. NO OUTPUT B1. INTERNAL PART FAILURE	HOIST B MOTOR CONTROLLER WILL NOT KNOW HOIST B POSITION	NONE. REQUIRES MULTIPLE FAILURES	3
			A2. INCORRECT OUTPUT B2. INTERNAL PART FAILURE	ERRONEOUS HOIST B POSITION DATA TO REGULATOR CONTROL BOARD. E-STOP CAN HALT CRANE OPERATIONS	NONE. REQUIRES MULTIPLE FAILURES	3

FAILURE MODES AND EFFECTS ANALYSIS (FMEA) WORKSHEET

System: 30 TON BRIDGE CRANE **Program:** SPACE STATION **Facility/Station Set:** SSPF

Subsystem: ELECTRICAL CONTROLS, HOIST

Drawing No.: 101A16061 **Sheet No.:** 1 TO 20 **Page:** 98 **of** 156 **Date:** 18 March, 2005

PMN: K61-2944 **Baseline:** 580.01 **Prepared by:** W. DiMeo, Boeing

FIND NO. PART NO.	PART NAME	PART FUNCTION	A. FAILURE MODE B. CAUSE C. FMN D. DETECTION METHOD E. CORRECTING ACTION F. TIME TO EFFECT G. TIMEFRAME	FAILURE EFFECT ON SYSTEM PERFORMANCE	FAILURE EFFECT ON FLIGHT HARDWARE AND/OR PERSONNEL SAFETY	CRIT CAT
IPB	HOIST B INTERFACE POWER BOARD	PROVIDES POWER TO OTHER CONTROLLER COMPONENTS AND TO SHUNT FIELD	A1. NO OUTPUT B1. INTERNAL PART FAILURE	HOIST B INOPERATIVE	NONE. REQUIRES MULTIPLE FAILURES	3
			A2. INCORRECT OUTPUT B2. INTERNAL PART FAILURE	INTERMITTEND HOIST B OPERATION	NONE. REQUIRES MULTIPLE FAILURES	3
SOB	HOIST B SNUBBER OVERVOLTAGE BOARD	PROVIDES TRANSIENT OVER VOLTAGE PROTECTION TO MOTOR CONTROLLER CIRCUIT	A1. FAILS TO OPERATE B1. INTERNAL PART FAILURE	POSIBLE DAMAGE TO MOTOR CONTROLLER CIRCUITS	NONE. REQUIRES MULTIPLE FAILURES	3
			A2. PREMATURE OPERATION B2. INTERNAL PART FAILURE	NONE	NONE. REQUIRES MULTIPLE FAILURES	3
EIB 200	HOIST B ELECTRICAL INTERFACE BOARD	PROVIDES INTERFACE BETWEEN HOIST B SPEED INDICATOR RCB BOARD	A1. FAILS TO OPERATE B1. INTERNAL PART FAILURE	NO HOIST B SPEED INDICATION	NONE. REQUIRES MULTIPLE FAILURES	3
			A2. INCORRECT OUTPUT B2. INTERNAL PART FAILURE	INCORRECT HOIST B SPEED INDICATION	NONE. REQUIRES MULTIPLE FAILURES	3

FAILURE MODES AND EFFECTS ANALYSIS (FMEA) WORKSHEET

System: 30 TON BRIDGE CRANE **Program:** SPACE STATION **Facility/Station Set:** SSPF

Subsystem: ELECTRICAL CONTROLS, HOIST

Drawing No.: 101A16061 **Sheet No.:** 1 TO 20 **Page:** 99 of 156 **Date:** 18 March, 2005

PMN: K61-2944 **Baseline:** 580.01 **Prepared by:** W. DiMeo, Boeing

FIND NO. PART NO.	PART NAME	PART FUNCTION	A. FAILURE MODE B. CAUSE C. FMN D. DETECTION METHOD E. CORRECTING ACTION F. TIME TO EFFECT G. TIMEFRAME	FAILURE EFFECT ON SYSTEM PERFORMANCE	FAILURE EFFECT ON FLIGHT HARDWARE AND/OR PERSONNEL SAFETY	CRIT CAT
NONE	MAIN CISCUIT BREAKER CONTACTS	PROTECTS CRANE COMPONENTS AND PRIMARY INPUT POWER CIRCUIT FROM DAMAGE DUE TO ELECTRICAL OVERLOAD	A1. FAILS OPEN B1. INTERNAL PART FAILURE	LOSS OF 480VAC POWER TO CRANE ELECTRICAL CIRCUITRY CRANE INOPERATIVE	DELAY IN OPERATIONS	3
			A2. FAILS CLOSED B2. INTERNAL PART FAILURE	FAILURE WOULD RESULT IN INABILITY TO REMOVE PRIMARY POWER (480VAC) FROM CRANE ELECTRICAL CIRCUTS. E-STOP CAN BE USED TO REMOVE POWER	DELAY IN OPERATIONS	3
	SHUNT TRIP COIL	WHEN ENERGIZED OPENS MAIN CIRCUIT BREAKER CB1	A1. FAILS OPEN B1. INTERNAL PART FAILURE	MAIN CIRCUIT BREAKER CB 201 WILL NOT OPEN WITH ACTIVATION OF E-STOP. OTHER HALF OF E-STOP WILL OPEN CONTACTORS N1, N2, N3 AND N4	NONE. REQUIRES MULTIPLE FAILURES	3
CR1	CRANE START RELAY COIL	WHEN ENERGIZED ENABLES RESET/START RELAYS RR1, RR2, RR3 AND RR4	A1. FAILS TO OPERATE B1. INTERNAL PART FAILURE	CRANE WILL NOT FUNCTION	DELAY IN OPERATIONS	3
	N.O. CONTACTS IN SERIES WITH RR1	ENABLES CRANE CONTROL CIRCUITS	A1. FAILS TO OPEN B1. INTERNAL PART FAILURE	HOIST A INOPERATIVE	DELAY IN OPERATION	3
			A2. FAILS CLOSED B2. INTERNAL PART FAILURE	HOIST A MOTOR RUNS CONTINUOSLY	NONE. REQUIRES MULTIPLE FAILURES	3
CR1	N.O CONTACTS IN SERIES WITH RR2	ENABLES HOIST B CIRCUIT	A1. FAILS OPEN B1. INTERNAL PART FAILURE	HOIST B WILL NOT FUNCTION	DELAY IN OPERATIONS	3
			A2. FAILS CLOSED B2. INTERNAL PARTS FAILURE	HOIST B MOTOR CONTINUOSLY ENABLED POWERED	NONE. REQUIRES MULTIPLE FAILURES	3

FAILURE MODES AND EFFECTS ANALYSIS (FMEA) WORKSHEET

System: 30 TON BRIDGE CRANE **Program:** SPACE STATION **Facility/Station Set:** SSPF

Subsystem: ELECTRICAL CONTROLS, HOIST

Drawing No.: 101A16061 **Sheet No.:** 1 TO 20 **Page:** 100 of 156 **Date:** 18 March, 2005

PMN: K61-2944 **Baseline:** 580.01 **Prepared by:** W. DiMeo, Boeing

FIND NO. PART NO.	PART NAME	PART FUNCTION	A. FAILURE MODE B. CAUSE C. FMN D. DETECTION METHOD E. CORRECTING ACTION F. TIME TO EFFECT G. TIMEFRAME	FAILURE EFFECT ON SYSTEM PERFORMANCE	FAILURE EFFECT ON FLIGHT HARDWARE AND/OR PERSONNEL SAFETY	CRIT CAT
Cr1	N.O. CONTACTS IN SERIES WITH RR3	ENABLES TROLLEY MOTOR CIRCUIT	A1. FAILS OPEN B1. INTERNAL PART FAILURE	TROLLEY WILL NOT FUNCTION	DELAY IN OPERATIONS	3
			A2. FAILS CLOSED B2. INTERNAL PARTS FAILURE	CONTINUOS POWER TO TROLLEY	NONE. REQUIRES MULTIPLE FAILURES	3
	N.O. CONTACTS IN SERIES WITH RR4	ENABLES BRIDGE MOTOR CIRCUIT	A1. FAILS OPEN B1. INTERNAL PART FAILURE	LOSS OF POWER TO BRIDGE	DELAY IN OPERATIONS	3
			A2. FAILS CLOSED B2. INTERNAL PARTS FAILURE	CONTINUOS POWER TO BRIDGE	NONE. REQUIRES MULTIPLE FAILURES	3
CR2	CRANE STOP RELAY COIL	CONTROLS POWER TO CRANE CONTROL CIRCUITS, (HOIST, TROLLEY, BRIDGE)	A1. FAILS OPEN B1. INTERNAL PART FAILURE	CRANE INOPERATIVE	DELAY IN OPERATIONS	3
CR2	N.O. CONTACTS IN SERIES WITH RR1	ENABLES RR1 RELAY	A1. FAILS TO OPEN B1. INTERNAL PART FAILURE	HOIST A INOPERATIVE	DELAY IN OPERATION	3
			A2. FAILS CLOSED B2. INTERNAL PART FAILURE	HOIST B CONTINUOSLY ENABLED	NONE. REQUIRES MULTIPLE FAILURES	3
	N.O CONTACTS IN SERIES WITH RR2	ENABLES RR2 RELAY	A1. FAILS OPEN B1. INTERNAL PART FAILURE	HOIST B INOPERABLE	DELAY IN OPERATIONS	3
			A2. FAILS CLOSED B2. INTERNAL PARTS FAILURE	HOIST B CONTINUOSLY ENABLED	NONE. REQUIRES MULTIPLE FAILURES	3

FAILURE MODES AND EFFECTS ANALYSIS (FMEA) WORKSHEET

System: 30 TON BRIDGE CRANE **Program:** SPACE STATION **Facility/Station Set:** SSPF

Subsystem: ELECTRICAL CONTROLS, HOIST

Drawing No.: 101A16061 **Sheet No.:** 1 TO 20 **Page:** 101 **of** 156 **Date:** 18 March, 2005

PMN: K61-2944 **Baseline:** 580.01 **Prepared by:** W. DiMeo, Boeing

FIND NO. PART NO.	PART NAME	PART FUNCTION	A. FAILURE MODE B. CAUSE C. FMN D. DETECTION METHOD E. CORRECTING ACTION F. TIME TO EFFECT G. TIMEFRAME	FAILURE EFFECT ON SYSTEM PERFORMANCE	FAILURE EFFECT ON FLIGHT HARDWARE AND/OR PERSONNEL SAFETY	CRIT CAT
CR2	N.O. CONTACTS IN SERIES WITH RR3	ENABLES RR3 RELAY	A1. FAILS OPEN B1. INTERNAL PART FAILURE	TROLLEY INOPERABLE	DELAY IN OPERATIONS	3
			A2. FAILS CLOSED B2. INTERNAL PARTS FAILURE	TROLLEY CONTINUOSLY ENABLED	NONE. REQUIRES MULTIPLE FAILURES	3
	N.C. CONTACTS IN SERIES WITH RR4	ENABLES RR4 RELAY	A1. FAILS OPEN B1. INTERNAL PART FAILURE	BRIDGE INOPERABLE	DELAY IN OPERATIONS	3
			A2. FAILS CLOSED B2. INTERNAL PARTS FAILURE	BRIDGE CONTINUOSLY ENABLED	NONE. REQUIRES MULTIPLE FAILURES	3
CRANE STOP SWITCH	N.C. PUSH-BUTTON SWITCH	WHEN OPEN STOPS CRANE OPERATION	A1. FAILS OPEN B1. INTERNAL PART FAILURE	CRANE INOPERATIVE	DELAY IN OPERATIONS	3
			A2. FAILS CLOSED B2. INTERNAL PARTS FAILURE	UNABLE TO STOP CRANE OPERATION WITH STOP SWITCH. E-STOP CAN BE USED TO STOP CRANE OPERATION.	NONE. REQUIRES MULTIPLE FAILURES	3
CRANE START/RESET SWITCH	N.O. PUSH-BUTTON SWITCH	WHEN CLOSED RESETS/START CRANE OPERATION	A1. FAILS OPEN B1. INTERNAL PART FAILURE	CRANE INOPERATIVE	DELAY IN OPERATIONS	3
			A2. FAILS CLOSED B2. INTERNAL PARTS FAILURE	CRANE WILL COME UP IN ACTIVE MODE WITHOUT PUSHING REST/START SWITCH	NONE. REQUIRES MULTIPLE FAILURES	3

FAILURE MODES AND EFFECTS ANALYSIS (FMEA) WORKSHEET

System: 30 TON BRIDGE CRANE **Program:** SPACE STATION **Facility/Station Set:** SSPF

Subsystem: ELECTRICAL CONTROLS, HOIST

Drawing No.: 101A16061 **Sheet No.:** 1 TO 20 **Page:** 102 **of** 156 **Date:** 18 March, 2005

PMN: K61-2944 **Baseline:** 580.01 **Prepared by:** W. DiMeo, Boeing

FIND NO. PART NO.	PART NAME	PART FUNCTION	A. FAILURE MODE B. CAUSE C. FMN D. DETECTION METHOD E. CORRECTING ACTION F. TIME TO EFFECT G. TIMEFRAME	FAILURE EFFECT ON SYSTEM PERFORMANCE	FAILURE EFFECT ON FLIGHT HARDWARE AND/OR PERSONNEL SAFETY	CRIT CAT
	E-STOP SWITCH NORMALLY OPEN SIDE	ALLOWS OPERATOR ABILITY TO STOP WHATEVER OPERATION IS UNDERWAY BY REMOVING INPUT POWER TO THE CRANE	A1. FAILS OPEN B1. INTERNAL PART FAILURE	UNABLE TO REMOVE POWERBY ENERGIZING MAIN BREAKER'S SHUNT TRIP COIL. CRANE MOTION WILL BE STOPPED BY N.C. SIDE OF E-STOP OPENENING	NONE. MULTIPLE FAILURES REQUIRED	3
			A2. FAILS CLOSED B2. INTERNAL PARTS FAILURE	CRANE INOPERATIVE	DELAY IN OPERATIONS	3
	E-STOP SWITCH NORMALLY CLOSED	WHEN OPENED, OPENS CIRCUIT TO CR2 CAUSING CRANE TO HALT	A1. FAILS OPEN B1. INTERNAL PART FAILURE	LOSS OF POWER TO CRANE CONTROL CIRCUITS	DELAY IN OPERATIONS	3
			A2. FAILS CLOSED B2. INTERNAL PARTS FAILURE	CRANE OPERATIONS CONTROL POWER CANNOT BE REMOVED WITH E-STOP DEPRESSION. N.O. SIDE OF E-STOP WILL REMOVE INPUT POWER RELEASE OF DIRECTION CONTROLS WILL ALSO HALT OPERATION	DELAY IN OPERATIONS	3
NONE	PHASE MONITOR RELAY N.C. CONTACTS ACROSS N.O. CONTACTS OF E-STOP		A1. FAILS OPEN B1. INTERNAL PART FAILURE	LOSS OF POWER TO CRANE CONTROL CIRCUITS. MAIN CONTACTOR WOULD DROP OUT	DELAY IN OPERATIONS	3
			A2. FAILS CLOSED B2. INTERNAL PARTS FAILURE	POSSIBLE DAMAGE TO CRANE CONTROL CIRCUIT	DELAY IN OPERATIONS	3

FAILURE MODES AND EFFECTS ANALYSIS (FMEA) WORKSHEET

System: 30 TON BRIDGE CRANE **Program:** SPACE STATION **Facility/Station Set:** SSPF

Subsystem: ELECTRICAL CONTROLS, HOIST

Drawing No.: 101A16061 **Sheet No.:** 1 TO 20 **Page:** 103 **of** 156 **Date:** 18 March, 2005

PMN: K61-2944 **Baseline:** 580.01 **Prepared by:** W. DiMeo, Boeing

FIND NO. PART NO.	PART NAME	PART FUNCTION	A. FAILURE MODE B. CAUSE C. FMN D. DETECTION METHOD E. CORRECTING ACTION F. TIME TO EFFECT G. TIMEFRAME	FAILURE EFFECT ON SYSTEM PERFORMANCE	FAILURE EFFECT ON FLIGHT HARDWARE AND/OR PERSONNEL SAFETY	CRIT CAT
	PHASE MONITOR RELAY N.O. CONTACTS IN SERIES WITH CR2 RELAY COIL	CLOSED WHEN INPUT POWER TO CRANE IS IN PHASE	A1. FAILS OPEN B1. INTERNAL PART FAILURE	LOSS OF POWER TO CRANE CONTROL CIRCUITS	DELAY IN OPERATIONS	3
			A2. FAILS CLOSED B2. INTERNAL PARTS FAILURE	POSSIBLE DAMAGE TO CRANE ELECTRICAL COMPONENTS	DELAY IN OPERATIONS	3
NONE	PHASE MONITOR COIL	INSURES THAT INCOMING POWER IS IN PHASE BEFORE IT IS APPLIED TO CRANE CIRCUITS	A1. FAILS OPEN B1. INTERNAL PART FAILURE	CRANE INOPERATIVE	DELAY IN OPERATIONS	3
	MAIN BREAKER SHUNT TRIP COIL	WHEN ENERGIZED (VIA E-STOP)	A1. FAILS OPEN B1. INTERNAL PART FAILURE	LOSS OF ALL CRANE POWER	DELAY IN OPERATIONS	3
RR4	START/RESET RELAY COIL	RESETS BRIDGE MOTOR CONTROLLER AND ENABLES AC4 RELAY CIRCUIT	A1. FAILS OPEN B1. INTERNAL PART FAILURE	LOSS OF ALL CRANE POWER	DELAY IN OPERATIONS	3

FAILURE MODES AND EFFECTS ANALYSIS (FMEA) WORKSHEET

System: 30 TON BRIDGE CRANE **Program:** SPACE STATION **Facility/Station Set:** SSPF

Subsystem: ELECTRICAL CONTROLS, HOIST

Drawing No.: 101A16061 **Sheet No.:** 1 TO 20 **Page:** 104 **of** 156 **Date:** 18 March, 2005

PMN: K61-2944 **Baseline:** 580.01 **Prepared by:** W. DiMeo, Boeing

FIND NO. PART NO.	PART NAME	PART FUNCTION	A. FAILURE MODE B. CAUSE C. FMN D. DETECTION METHOD E. CORRECTING ACTION F. TIME TO EFFECT G. TIMEFRAME	FAILURE EFFECT ON SYSTEM PERFORMANCE	FAILURE EFFECT ON FLIGHT HARDWARE AND/OR PERSONNEL SAFETY	CRIT CAT
RR4	N.O. CONTACTS IN SERIES WITH RELAY AC4	WHEN CLOSED ENABLES AC4 (AUXILIARY RELAY CIRCUIT)	A1. FAILS OPEN B1. INTERNAL PART FAILURE	BRIDGE WILL NOT OPERATE	DELAY IN OPERATIONS	3
			A2. FAILS CLOSED B2. INTERNAL PART FAILURE	BRIDGE CONTROL RELAY AC4 CIRCUIT WILL BE CONTINUOSLY ENABLED	NONE. REQUIRES MULTIPLE FAILURES	3
	N.O. CONTACTS IN SERIES WITH BRIDGE CONTROLLER RESET INPUT	WHEN CLOSED RESET BRIDGE CONTROLLLER	A1. FAILS OPEN B1. INTERNAL PART FAILURE	BRIDGE CONTROLLER WILL NOT RESET AND INITIALIZE FOR OPERATION	DELAY IN OPERATIONS	3
			A2. FAILS CLOSED B2. INTERNAL PART FAILURE	BRIDGE CONTROL CONTINUOSLY RESET. BRIDGE WILL NOT OPERATE	DELAY IN OPERATIONS	3
AC4	AUXILIARY RELAY COIL	WHEN ENERGIZED ENABLES EMERGENCY STOP RELAY , AC LINE CONTACTOR (N4) AND ENABLE RELAY (ER4)	A1. FAILS OPEN B1. INTERNAL PART FAILURE	BRIDGE WILL NOT OPERATE	DELAY IN OPERATIONS	3
	AUXILIARY RELAY N.O. CONTACTS IN SERIES WITH AC4 COIL	WHEN ENERGIZED PROVIDES LOCKING CURRENT PATH FOR AC4 COIL	A1. FAILS OPEN B1. INTERNAL PART FAILURE	BRIDGE WILL NOT OPERATE	DELAY IN OPERATIONS	3
			A2. FAILS CLOSED B2. INTERANL PARTS FAILURE	AC4 RELAY CONTINUOSLY ENABLED AS LONG AS ESR4, FR4, AND CR2 ARE CLOSED	NONE. REQUIRES MULTIPLE FAILURES	3

FAILURE MODES AND EFFECTS ANALYSIS (FMEA) WORKSHEET

System: 30 TON BRIDGE CRANE **Program:** SPACE STATION **Facility/Station Set:** SSPF

Subsystem: ELECTRICAL CONTROLS, HOIST

Drawing No.: 101A16061 **Sheet No.:** 1 TO 20 **Page:** 105 of 156 **Date:** 18 March, 2005

PMN: K61-2944 **Baseline:** 580.01 **Prepared by:** W. DiMeo, Boeing

FIND NO. PART NO.	PART NAME	PART FUNCTION	A. FAILURE MODE B. CAUSE C. FMN D. DETECTION METHOD E. CORRECTING ACTION F. TIME TO EFFECT G. TIMEFRAME	FAILURE EFFECT ON SYSTEM PERFORMANCE	FAILURE EFFECT ON FLIGHT HARDWARE AND/OR PERSONNEL SAFETY	CRIT CAT
ACA	N.O. CONTACTS IN SERIES WITH ESR4 (EMERGENCY STOP REALY)	WHEN CLOSED ENABLES EMERGENCY STOP RELAY	A1. FAILS OPEN B1. INTERNAL PART FAILURE	BRIDGE WILL NOT OPERATE	DELAY IN OPERATIONS	3
			A2. FAILS CLOSED B2. INTERANL PARTS FAILURE	ESR4 WILL NOT OPEN IF FAULT OCCURS TO HALT BRIDGE MOVEMENT	DELAY IN OPERATIONS	3
	N.O. CONTACTS IN SERIES WITH N4 (A.C. LINE CONTACTOR)	WHEN CLAOSED ENABLES A.C. LINE CONTACTOR (N4)	A1. FAILS OPEN B1. INTERNAL PART FAILURE	BRIDGE IN OPERATIVE	DELAY IN OPERATIONS	3
			A2. FAILS CLOSED B2. INTERANL PARTS FAILURE	A.C. CONTACTOR (N4) CONSTANTLY ENABLED	NONE. REQUIRES MULTIPLE FAILURES	3
AC4	N.O. CONTACTS IN SERIES WITH ENABLED RELAY	WHEN CLAOSED ENABLES THE ENABLED RELAY (ER4)	A1. FAILS OPEN B1. INTERNAL PART FAILURE	BRIDGE IN OPERATIVE	DELAY IN OPERATIONS	3
			A2. FAILS CLOSED B2. INTERANL PARTS FAILURE	BRIDGE DRIVE CONSTANTLY ENABLED	NONE. REQUIRES MULTIPLE FAILURES	3
	N.O. CONTACTS IN SERIES WITH CRANE POWER ON LIGHT	WHEN CLOSED ENABLES CRANE POWER ON LIGHT	A1. FAILS OPEN B1. INTERNAL PART FAILURE	CRANE POWER ON LAMP WILL NOT IGNITE WITH AC4 ENERGIZED	NONE. REQUIRES MULTIPLE FAILURES	3
			A2. FAILS CLOSED B2. INTERANL PARTS FAILURE	CRANE POWER ON LAMP WILL BE CONTINUOSLY ON	NONE. REQUIRES MULTIPLE FAILURES	3

FAILURE MODES AND EFFECTS ANALYSIS (FMEA) WORKSHEET

System: 30 TON BRIDGE CRANE **Program:** SPACE STATION **Facility/Station Set:** SSPF

Subsystem: ELECTRICAL CONTROLS, HOIST

Drawing No.: 101A16061 **Sheet No.:** 1 TO 20 **Page:** 106 **of** 156 **Date:** 18 March, 2005

PMN: K61-2944 **Baseline:** 580.01 **Prepared by:** W. DiMeo, Boeing

FIND NO. PART NO.	PART NAME	PART FUNCTION	A. FAILURE MODE B. CAUSE C. FMN D. DETECTION METHOD E. CORRECTING ACTION F. TIME TO EFFECT G. TIMEFRAME	FAILURE EFFECT ON SYSTEM PERFORMANCE	FAILURE EFFECT ON FLIGHT HARDWARE AND/OR PERSONNEL SAFETY	CRIT CAT
TDR4	TIME DELAY RELAY COIL	PROVIDES TIME DELAY FOR ENERGIZATION OF A.C. LINE CONTACTOR (N4)	A1. FAILS OPEN B1. INTERNAL PART FAILURE	BRIDGE INOPERATIVE	DELAY IN OPERATIONS	3
	N.O. CONTACTS IN SERIES WITH N4	WHEN CLAOSED ENABLES N4 CONTACTOR COIL CIRCUIT	A1. FAILS OPEN B1. INTERNAL PART FAILURE	BRIDGE IN OPERATIVE	DELAY IN OPERATIONS	3
			A2. FAILS CLOSED B2. INTERANL PARTS FAILURE	A.C. LINE CONTACTOR CONSTANTLY ENABLED	NONE. REQUIRES MULTIPLE FAILURES	3
ESR4	EMERGENCY STOP RELAY COIL	WHEN ENRGIZED ENABLES LOCKING CURRENT CIRCUIT FOR RELAY AC4 AND CLOSES CIRCUIT TO E-STOP INPUT TO CONTROLLER	A1. FAILS OPEN B1. INTERNAL PART FAILURE	BRIDGE IN OPERATIVE	DELAY IN OPERATIONS	3
ESR4	EMERGENCY STOP REALY COIL	N.O. CONTACTS IN SERIES WITH AC4 RELAY	A1. FAILS OPEN B1. INTERNAL PART FAILURE	BRIDGE WILL NOT OPERATE	DELAY IN OPERATIONS	3
			A2. FAILS CLOSED B2. INTERANL PARTS FAILURE	AC4 (RELAY) CONTINUOSLY ENERGIZED	DELAY IN OPERATIONS	3

FAILURE MODES AND EFFECTS ANALYSIS (FMEA) WORKSHEET

System: 30 TON BRIDGE CRANE **Program:** SPACE STATION **Facility/Station Set:** SSPF

Subsystem: ELECTRICAL CONTROLS, HOIST

Drawing No.: 101A16061 **Sheet No.:** 1 TO 20 **Page:** 107 **of** 1565 **Date:** 18 March, 2005

PMN: K61-2944 **Baseline:** 580.01 **Prepared by:** W. DiMeo, Boeing

FIND NO. PART NO.	PART NAME	PART FUNCTION	A. FAILURE MODE B. CAUSE C. FMN D. DETECTION METHOD E. CORRECTING ACTION F. TIME TO EFFECT G. TIMEFRAME	FAILURE EFFECT ON SYSTEM PERFORMANCE	FAILURE EFFECT ON FLIGHT HARDWARE AND/OR PERSONNEL SAFETY	CRIT CAT
ESR4	EMERGENCY STOP REALY COIL	N.O. CONTACTS IN SERIES WITH BRIDGE CONTROLLER UPPER LIMIT E-STOP TERMINAL)	A1. FAILS OPEN B1. INTERNAL PART FAILURE	BRIDGE INOPERATIVE	DELAY IN OPERATIONS	3
			A2. FAILS CLOSE B2. INTERNAL PART FAILURE	BRIDGE CONTROLLER WILL NOT HALT BRIDGE MOTION WHEN ESR4 RELAY IS DEENERGIZED INDICATING ABNORMAL CONDITION	NONE. REQUIRES MULTIPLE FAILURES	3
N4	A.C. LINE CONTACTOR COIL	WHEN ENERGIZED ITS CONTACTS PROVIDE PATH FOR POWER TO BRIDGE CONTROLLER AND BRIDGE BRAKE SOLENOID	A1. FAILS OPEN B1. INTERNAL PART FAILURE	BRIDGE IN OPERATIVE	DELAY IN OPERATIONS	3

FAILURE MODES AND EFFECTS ANALYSIS (FMEA) WORKSHEET

System: 30 TON BRIDGE CRANE **Program:** SPACE STATION **Facility/Station Set:** SSPF

Subsystem: ELECTRICAL CONTROLS, HOIST

Drawing No.: 101A16061 **Sheet No.:** 1 TO 20 **Page:** 108 **of** 156 **Date:** 18 March, 2005

PMN: K61-2944 **Baseline:** 580.01 **Prepared by:** W. DiMeo, Boeing

FIND NO. PART NO.	PART NAME	PART FUNCTION	A. FAILURE MODE B. CAUSE C. FMN D. DETECTION METHOD E. CORRECTING ACTION F. TIME TO EFFECT G. TIMEFRAME	FAILURE EFFECT ON SYSTEM PERFORMANCE	FAILURE EFFECT ON FLIGHT HARDWARE AND/OR PERSONNEL SAFETY	CRIT CAT
N4	N.O CONTACTS (3 SETS) IN SERIES WITH AC INPUT LINES TO BRIDGE CONTROLLER	WHEN CLOSED PROVIDES PATH FOR POWER TO BRIDGE CONTROLLER AND BRIDGE BRAKE SOLENOID	A1. FAILS OPEN (ANY ONE OF THEM OR ALL 3 SETS) B1. INTERNAL PART FAILURE	BRIDGE INOPERATIVE	DELAY IN OPERATIONS	3
			A2. FAILS CLOSED (ANY ONE OF THEM OR ALL 3 SETS) B2. INTERNAL PARTS FAILURE	CONTINUOS POWER TO BRIDGE CONTROLLER. POWER CAN BE REMOVED BY OPENING CIRCUIT BREAKER CKT. CB1201	DELAY IN OPERATIONS	3
N4 AUX	N.C. CONTACTS IN SEREIS WITH E-STOP	WHEN CLOSED PROVIDES +24VDC E-STOP INPUT OF BRIDGE MOTOR CONTROLLER	A1. FAILS OPEN B1. INTERNAL PART FAILURE	BRIDGE INOPERATIVE. BRAKES SET	DELAY IN OPERATIONS	3
			A2. FAILS CLOSED B2. INTERNAL PART FAILURE	BRIDGE CONTROLLER WILL NOT HALT BRIDGE WHEN FAULT DETECTED. E-STOPS WILL	NONE. REQUIRES MULTIPLE FAILURES	3
	N.O. CONTACTS IN SERIES WITH ENABLE RELAY	WHEN CLOSED ENABLE THE ENABLE RELAY COIL CIRCUIT	A1. FAILS OPEN B1. INTERNAL PART FAILURE	BRIDGE INOPERATIVE	DELAY IN NECESSARY REPAIRS	3
			A2. FAILS CLOSED B2. INTERNAL PART FAILURE	NONE	NONE. REQUIRES MULTIPLE FAILURES	3

FAILURE MODES AND EFFECTS ANALYSIS (FMEA) WORKSHEET

System: 30 TON BRIDGE CRANE **Program:** SPACE STATION **Facility/Station Set:** SSPF

Subsystem: ELECTRICAL CONTROLS, HOIST

Drawing No.: 101A16061 **Sheet No.:** 1 TO 20 **Page:** 109 **of** 156 **Date:** 18 March, 2005

PMN: K61-2944 **Baseline:** 580.01 **Prepared by:** W. DiMeo, Boeing

FIND NO. PART NO.	PART NAME	PART FUNCTION	A. FAILURE MODE B. CAUSE C. FMN D. DETECTION METHOD E. CORRECTING ACTION F. TIME TO EFFECT G. TIMEFRAME	FAILURE EFFECT ON SYSTEM PERFORMANCE	FAILURE EFFECT ON FLIGHT HARDWARE AND/OR PERSONNEL SAFETY	CRIT CAT
N4 AUX	N. .O. CONTACTS IN SERIES WITH SHUNT TRIP RELAY	ENABLES E-STOP SHUNT TRIP COIL CIRCUIT	A1. FAILS OPEN B1. INTERNAL PART FAILURE	UPPER HALF OF E-STOP (SHUNT TRIP CIRCUIT) WILL NOT FUNCTION. LOWER HALF OF E-STOP WILL OPERATE	NONE. REQUIRES MULTIPLE FAILURES	3
			A2. FAILS CLOSED B2. INTERNAL PART FAILURE	NONE	NONE. REQUIRES MULTIPLE FAILURES	3
ER4	ENABLE RELAY COIL	ENABLES BRIDGE MOTOR CONTROLLER, AND AC4 CONTACTOR	A1. FAILS OPEN B1. INTERNAL PART FAILURE	BRIDGE INOPERATIVE	DELAY IN NECESSARY REPAIRS	3
	ENABLE RELAY N.O. CONTACTS IN SERIES WITH ER4 RELAY COIL	PROVIDES PATH FOR LOCKING CURRENT FOR ER4 CIL	A1. FAILS OPEN B1. INTERNAL PART FAILURE	BRIDGE INOPERATIVE	DELAY IN OPERATIONS	3
			A2. FAILS CLOSED B2. INTERNAL PART FAILURE	NONE	DELAY IN OPERATIONS	3
	N.O. CONTACTS IN SERIES WITH BRIDGE CONTROLLER ENABLE INPUT	ENABLES BRIDGE CONTROLLER WHEN CLOSED	A1. FAILS OPEN B1. INTERNAL PART FAILURE	BRIDGE INOPERATIVE	DELAY IN OPERATIONS	3
			A2. FAILS CLOSED B2. INTERNAL PART FAILURE	BRIDGE CONTROLLER CONTINUOSLY ENABLED	NONE. REQUIRES DOUBLE FAILURES	3

FAILURE MODES AND EFFECTS ANALYSIS (FMEA) WORKSHEET

System: 30 TON BRIDGE CRANE **Program:** SPACE STATION **Facility/Station Set:** SSPF

Subsystem: ELECTRICAL CONTROLS, HOIST

Drawing No.: 101A16061 **Sheet No.:** 1 TO 20 **Page:** 110 **of 156** **Date:** 18 March, 2005

PMN: K61-2944 **Baseline:** 580.01 **Prepared by:** W. DiMeo, Boeing

FIND NO. PART NO.	PART NAME	PART FUNCTION	A. FAILURE MODE B. CAUSE C. FMN D. DETECTION METHOD E. CORRECTING ACTION F. TIME TO EFFECT G. TIMEFRAME	FAILURE EFFECT ON SYSTEM PERFORMANCE	FAILURE EFFECT ON FLIGHT HARDWARE AND/OR PERSONNEL SAFETY	CRIT CAT
ER4	N.O. CONTACTS IN SERIES WITH N4 CONTACTOR	WHEN CLOSED, ENABLES N4 COIL CIRCUIT	A1. FAILS OPEN B1. INTERNAL PART FAILURE	BRIDGE INOPERATIVE	DELAY IN OPERATIONS	3
			A2. FAILS CLOSED B2. INTERNAL PART FAILURE	N4 (CONTACTOR0 CONTINUOSLY ENABLED	NONE. REQUIRES DOUBLE FAILURE	3
BC4	BRAKE CONTACTOR COIL	WHEN ENERGIZED CAUSES BRIDGE BRAKE TO RELEASE AND INHIBITS START/RESET RELAY WHILE BRAKES ARE ENERGIZED	A1. FAILS OPEN B1. INTERNAL PART FAILURE	BRIDGE BRAKES WILL NOT RELEASE AND RR4 (RESET/START RELAY) WILL REMAIN ENERGIZED	DELAY IN OPERATIONS	3
	N.O. CONTACTS IN SERIES WITH BC4 CONTACTOR	PROVIDES HOLDING CURRENT FOR BC4 COIL	A1. FAILS OPEN B1. INTERNAL PART FAILURE	BRIDGE INOPERATIVE	DELAY IN OPERATIONS	3
			A2. FAILS CLOSED B2. INTERNAL PART FAILURE	BRIDGE BRAKE CONTACTOR, BC4 WILL BE CONTINUOSLY ENERGIZED	NONE. REQUIRES DOUBLE FAILURE	3
BC4	N.O. CONTACTS IN SERIES WITH BOTH INPUT LINES OF BRIDGE BRAKE SOLENOID	PROVIDES PATH FOR 460VAC TO BRIDGE BRAKE SOLENOID 1 AND 2	A1. FAILS OPEN B1. INTERNAL PART FAILURE	BRIDGE WILL NOT OPERATE	DELAY IN OPERATIONS	3
			A2. FAILS CLOSED B2. INTERNAL PART FAILURE	NONE. BOTH SETS OF CONTACTS WOULD HAVE TO FAIL CLOSED FOR CONTINUOS BRAKE RELEASE TO OCCUR	NONE. REQUIRES DOUBLE FAILURE	3

FAILURE MODES AND EFFECTS ANALYSIS (FMEA) WORKSHEET

System: 30 TON BRIDGE CRANE **Program:** SPACE STATION **Facility/Station Set:** SSPF

Subsystem: ELECTRICAL CONTROLS, HOIST

Drawing No.: 101A16061 **Sheet No.:** 1 TO 20 **Page:** 111 **of** 156 **Date:** 18 March, 2005

PMN: K61-2944 **Baseline:** 580.01 **Prepared by:** W. DiMeo, Boeing

FIND NO. PART NO.	PART NAME	PART FUNCTION	A. FAILURE MODE B. CAUSE C. FMN D. DETECTION METHOD E. CORRECTING ACTION F. TIME TO EFFECT G. TIMEFRAME	FAILURE EFFECT ON SYSTEM PERFORMANCE	FAILURE EFFECT ON FLIGHT HARDWARE AND/OR PERSONNEL SAFETY	CRIT CAT
BC4	N.C. CONTACTS IN SERIES WITH RR4 (RESET/START/ RELAY) COIL	ENSURES BRIDGE CAN NOT BE RESTARTED/STARTED WHEN BRAKES ARE ENGAGED	A1. FAILS OPEN B1. INTERNAL PART FAILURE	BRIDGE INOPERATIVE	DELAY IN OPERATIONS	3
			A2. FAILS CLOSED B2. INTERNAL PART FAILURE	REST/START RELAY CONTINUOSLY ENABLED	NONE. REQUIRES DOUBLE FAILURE	3
MBR2	MANUAL BYPASS RELAY COIL	WHEN ENERGIZED, ITS CONTACTS BYPASS OPEN REVERSE EOT LIMIT SWITCH	A1. FAILS OPEN B1. INTERNAL PART FAILURE	UNABLE TO CLEAR REVERSE LIMIT VIOLATION	DELAY IN OPERATIONS	3
	N.O. CONTACTS IN PARALLEL WITH REVERSE EOT LIMIT SWITCH	ALLOWS FOR REVERSING OF BRIDGE AFTER EOT LIMIT SWITCH HAS BEEN ACTIVATED	A1. FAILS OPEN B1. INTERNAL PART FAILURE	UNABLE TO CLERA REVERSE LIMIT VIOLATION	DELAY IN OPERATIONS	3
			A2. FAILS CLOSED B2. INTERNAL PART FAILURE	REVERSE EOT LIMIT SWITCH INOPERATIVE. BUMPER MAY BE CONTACTED	NONE. REQUIRES DOUBLE FAILURE	3
NONE	BYPASS EOT LIMIT SWITCH (N.O. KEYLOCK) MOMENTARY	WHEN CLOSED ENERGIZES MANUAL BYPASS RELAY, ALLOWING BRIDGE TO BE MOVED IF EOT LIMIT SWITCH HAS BEEN ACTIVATED	A1. FAILS OPEN B1. INTERNAL PART FAILURE	BRIDGE INOPERATIVE AFTER LIMIT HAS BEEN EXCEEDED	DELAY IN OPERATIONS	3
			A2. FAILS CLOSED B2. INTERNAL PART FAILURE	REVERSE EOT LIMIT SWITCH INOPERATIVE	NONE. REQUIRES DOUBLE FAILURE	3

FAILURE MODES AND EFFECTS ANALYSIS (FMEA) WORKSHEET

System: 30 TON BRIDGE CRANE **Program:** SPACE STATION **Facility/Station Set:** SSPF

Subsystem: ELECTRICAL CONTROLS, HOIST

Drawing No.: 101A16061 **Sheet No.:** 1 TO 20 **Page:** 112 **of** 156 **Date:** 18 March, 2005

PMN: K61-2944 **Baseline:** 580.01 **Prepared by:** W. DiMeo, Boeing

FIND NO. PART NO.	PART NAME	PART FUNCTION	A. FAILURE MODE B. CAUSE C. FMN D. DETECTION METHOD E. CORRECTING ACTION F. TIME TO EFFECT G. TIMEFRAME	FAILURE EFFECT ON SYSTEM PERFORMANCE	FAILURE EFFECT ON FLIGHT HARDWARE AND/OR PERSONNEL SAFETY	CRIT CAT
BFR	BRIDGE RORWARD RELAY COIL	WHEN ENERGIZED, ENABLES BRIDGE CIRCUITS FOR FORWARD MOVEMENT	A1. FAILS OPEN B1. INTERNAL PART FAILURE	BRIDGE INOPERATIVE IN FORWARD DIRECTION	DELAY IN OPERATIONS	3
	N.C. CONTACTS IN SERIES WITH BRIDGE REVERSE RELAY COIL	PREVENTS BRIDGE REVERSE FROM BEING SELECTED AT THE SAME TIME BRIDGE FORWARD IS SELECTED	A1. FAILS OPEN B1. INTERNAL PART FAILURE	BRIDGE INOPERATIVE IN REVERSE DIRECTION	DELAY IN OPERATIONS	3
			A2. FAILS CLOSED B2. INTERNAL PART FAILURE	IT WOULD BE POSSIBLE TO SELECT REVERSE AND FORWARD BRIDGE RELAY AT THE SAME TIME. BRIDGE CONTROLLER SHOULD COME UP WITH A FAULT	NONE. REQUIRES DOUBLE FAILURE	3
	N.C. CONTACTS IN SERIES WITH ENABLE RELAY ER4	WHEN CLOSED ENABLED BRIDGE CONTROLLER CIRCUIT	A1. FAILS OPEN B1. INTERNAL PART FAILURE	UNABLE TO ENABLE BRIDGE CONTROLLER. BRIDGE INOPERATIVE	DELAY IN OPERATIONS	3
			A2. FAILS CLOSED B2. INTERNAL PART FAILURE	BRIDGE ENABLE CONTROL RELAY CONTINUOSLY ENERGIZED	DELAY IN OPERATIONS	3
	N.O. CONTACTS IN SERIES WITH BRIDGE BRAKE CONTACTOR	WHEN CLOSED ENABLES BRIDGE BRAKE CONTACTOR COIL CIRCUIT	A1. FAILS OPEN B1. INTERNAL PART FAILURE	BRAKE WILL NOT RELEASE AND BRIDGE WILL NOT OPERATE	DELAY IN OPERATIONS	3
			A2. FAILS CLOSED B2. INTERNAL PART FAILURE	BRIDGE BRAKE CIRCUIT CONTINUOSLY ENABLED	NONE. REQUIRES DOUBLE FAILURE	3

FAILURE MODES AND EFFECTS ANALYSIS (FMEA) WORKSHEET

System: 30 TON BRIDGE CRANE **Program:** SPACE STATION **Facility/Station Set:** SSPF

Subsystem: ELECTRICAL CONTROLS, HOIST

Drawing No.: 101A16061 **Sheet No.:** 1 TO 20 **Page:** 113 **of 156** **Date:** 18 March, 2005

PMN: K61-2944 **Baseline:** 580.01 **Prepared by:** W. DiMeo, Boeing

FIND NO. PART NO.	PART NAME	PART FUNCTION	A. FAILURE MODE B. CAUSE C. FMN D. DETECTION METHOD E. CORRECTING ACTION F. TIME TO EFFECT G. TIMEFRAME	FAILURE EFFECT ON SYSTEM PERFORMANCE	FAILURE EFFECT ON FLIGHT HARDWARE AND/OR PERSONNEL SAFETY	CRIT CAT
BFR	N.O. CONTACTS IN SERIES WITH BRIDGE CONTROLLER, FORWARD INPUT	COMMANDS CONTROLLER TO MOVE BRIDGE FORWARD	A1. FAILS OPEN B1. INTERNAL PART FAILURE	BRIDGE WILL NOT MOVE IN FORWARD DIRECTION	DELAY IN OPERATIONS	3
			A2. FAILS CLOSED B2. INTERNAL PART FAILURE	BRIDGE CONTROLLER WILL HAVE CONTINUOUS FORWARD COMMAND ON ITS INPUT	NONE. REQUIRES DOUBLE FAILURE	3
	N.O. CONTACTS IN SERIES WITH BRIDGE CONTROLLER, DRIVE ON INPUT	COMMANDS CONTROLLER ON	A1. FAILS OPEN B1. INTERNAL PART FAILURE	BRIDGE WILL NOT MOVE IN FORWARD DIRECTION	DELAY IN OPERATIONS	3
			A2. FAILS CLOSED B2. INTERNAL PART FAILURE	BRIDGE CONTROLLER WILL HAVE CONTINUOS DRIVE COMMAND ON ITS INPUT	NONE. REQUIRES DOUBLE FAILURE	3
BRR	BRIDGE REVERSE RELAY COIL	WHEN ENERGIZED ENABLES BRIDGE CIRCUITS FOR REVERSE MOVEMENT	A1. FAILS OPEN B1. INTERNAL PART FAILURE	BRIDGE INOPERATIVE IN REVERSE DIRECTION	DELAY IN OPERATIONS	3

FAILURE MODES AND EFFECTS ANALYSIS (FMEA) WORKSHEET

System: 30 TON BRIDGE CRANE **Program:** SPACE STATION **Facility/Station Set:** SSPF

Subsystem: ELECTRICAL CONTROLS, HOIST

Drawing No.: 101A16061 **Sheet No.:** 1 TO 20 **Page:** 114 **of** 156 **Date:** 18 March, 2005

PMN: K61-2944 **Baseline:** 580.01 **Prepared by:** W. DiMeo, Boeing

FIND NO. PART NO.	PART NAME	PART FUNCTION	A. FAILURE MODE B. CAUSE C. FMN D. DETECTION METHOD E. CORRECTING ACTION F. TIME TO EFFECT G. TIMEFRAME	FAILURE EFFECT ON SYSTEM PERFORMANCE	FAILURE EFFECT ON FLIGHT HARDWARE AND/OR PERSONNEL SAFETY	CRIT CAT
BRR	N.C. CONTACTS IN SERIES WITH BRIDGE FORWARD RELAY COIL	PREVENTS BRIDGE FORWARD FROM BEING SELECTED AT THE SAME TIME BRIDGE REVERSE IS SELECTED	A1. FAILS OPEN B1. INTERNAL PART FAILURE	BRIDGE INOPERATIVE IN FORWARD DIRECTION	NONE. REQUIRES MULTIPLE FAILURES	3
			A2. FAILS CLOSED B2. INTERNAL PART FAILURE	LIT WOULD BE POSSIBLE TO SELECT REVERSE AND FORWARD BRIDGE RELAY AT THE SAME TIME. BRIDGE CONTROLLER SHOULD COME UP WITH A FAULT	DELAY IN OPERATIONS	3
BFR	N.C. CONTACTS IN SERIES WITH ENABLE RELAY ER4	WHEN CLOSED ENABLES BRIDGE CONTROLLER CIRCUIT	A1. FAILS OPEN B1. INTERNAL PART FAILURE	UNABLE TO ENABLE BRIDGE CONTROLLER. BRIDGE INOPERATIVE	DELAY IN OPERATIONS	3
			A2. FAILS CLOSED B2. INTERNAL PART FAILURE	BRIDGE ENABLE CONTROL RELAY CONTINUOSLY ENERGIZED	DELAY IN OPERATIONS	3
	N.O. CONTACTS IN SERIES WITH BRIDGE BRAKE CONTACTOR	WHEN CLOSED ENABLES BRIDGE BRAKE CONTACTOR COIL CIRCUIT	A1. FAILS OPEN B1. INTERNAL PART FAILURE	BRAKE WILL NOT RELEASE AND BRIDGE WILL NOT OPERATE	DELAY IN OPERATIONS	3
			A2. FAILS CLOSED B2. INTERNAL PART FAILURE	BRIDGE BRAKE CIRCUIT CONTINUOSLY ENABLED	NONE. REQUIRES DOUBLE FAILURE	3

FAILURE MODES AND EFFECTS ANALYSIS (FMEA) WORKSHEET

System: 30 TON BRIDGE CRANE **Program:** SPACE STATION **Facility/Station Set:** SSPF

Subsystem: ELECTRICAL CONTROLS, HOIST

Drawing No.: 101A16061 **Sheet No.:** 1 TO 20 **Page:** 115 **of** 156 **Date:** 18 March, 2005

PMN: K61-2944 **Baseline:** 580.01 **Prepared by:** W. DiMeo, Boeing

FIND NO. PART NO.	PART NAME	PART FUNCTION	A. FAILURE MODE B. CAUSE C. FMN D. DETECTION METHOD E. CORRECTING ACTION F. TIME TO EFFECT G. TIMEFRAME	FAILURE EFFECT ON SYSTEM PERFORMANCE	FAILURE EFFECT ON FLIGHT HARDWARE AND/OR PERSONNEL SAFETY	CRIT CAT
BFR	N.O. CONTACTS IN SERIES WITH BRIDGE CONTROLLER REVERSE INPUT	COMMANDS CONTROLLER TO MOVE BRIDGE REVERSE	A1. FAILS OPEN B1. INTERNAL PART FAILURE	BRIDGE WILL NOT MOVE IN REVERSE DIRECTION	DELAY IN OPERATIONS	3
			A2. FAILS CLOSED B2. INTERNAL PART FAILURE	BRIDGE CONTROLLLER WILL HAVE CONTINUOS REVERSE COMMAND ON ITS INPUT	DELAY IN OPERATIONS	3
	N.O. CONTACTS IN SERIES WITH BRIDGE CONTROLLER DRIVE ON INPUT	COMMANDS CONTROLLER ON	A1. FAILS OPEN B1. INTERNAL PART FAILURE	BRIDGE WILL NOT MOVE IN REVERSE DIRECTION	DELAY IN OPERATIONS	3
			A2. FAILS CLOSED B2. INTERNAL PART FAILURE	BRIDGE CONTROLLLER WILL HAVE CONTINUOS REVERSE COMMAND ON ITS INPUT	DELAY IN OPERATIONS	3
SDP2	BRIDGE SLOWDOWN RELAY COIL	WHEN ENERGIZED ITS CONTACTS COMMAND CONTROLLER TO SLOWDOWN	A1. FAILS OPEN B1. INTERNAL PART FAILURE	BRIDGE WILL NOT SLOWDOWN WHEN REVERSE LIMIT SWITCH IS ACTIVATED. E-STOP CAN BE USED TO STOP BRIDGE	NONE. REQUIRES DOUBLE FAILURE	3
	N.O. CONTACTS IN SERIES WITH BRIDGE CONTROLLER SLOWDOWN INPUT LINE	THESE CONTACTS COMMANDS CONTROLLER TO SLOWDOWN WHEN REVERSE LIMIT SWITCH IS ACTIVATED	A1. FAILS OPEN B1. INTERNAL PART FAILURE	BRIDGE WILL NOT SLOWDOWN WHEN REVERSE LIMIT SWITCH IS ACTIVATED. E-STOP CAN BE USED TO STOP BRIDGE	NONE. REQUIRES MULTIPLE FAILURES	3
			A2. FAILS CLOSED B2. INTERNAL PART FAILURE	BRIDGE WILL ONLY RUN IN SLOWDOWN (LOW SPEED)	DELAY IN OPERATIONS	3

FAILURE MODES AND EFFECTS ANALYSIS (FMEA) WORKSHEET

System: 30 TON BRIDGE CRANE **Program:** SPACE STATION **Facility/Station Set:** SSPF

Subsystem: ELECTRICAL CONTROLS, HOIST

Drawing No.: 101A16061 **Sheet No.:** 1 TO 20 **Page:** 116 **of** 156 **Date:** 18 March, 2005

PMN: K61-2944 **Baseline:** 580.01 **Prepared by:** W. DiMeo, Boeing

FIND NO. PART NO.	PART NAME	PART FUNCTION	A. FAILURE MODE B. CAUSE C. FMN D. DETECTION METHOD E. CORRECTING ACTION F. TIME TO EFFECT G. TIMEFRAME	FAILURE EFFECT ON SYSTEM PERFORMANCE	FAILURE EFFECT ON FLIGHT HARDWARE AND/OR PERSONNEL SAFETY	CRIT CAT
NONE	NREVERSE SLOWDOWN LIMIT SWITCH	WHEN ACTIVATED INDICATING BRIDGE HAS REACHED REVERSE TRAVEL LIMIT IT ENERGIZES THE SLOWDOWN RELAY	A1. FAILS OPEN B1. INTERNAL PART FAILURE	BRIDGE WILL NOT SLOW DOWN WHEN REVERSE LIMIT SWITCH IS ACTIVATED. E-STOP CAN DE USED TO STOP BRIDGE	NONE. REQUIRES DOUBLE FAILURE	3
			A2. FAILS CLOSED B2. INTERNAL PART FAILURE	BRIDGE WILL ONLY RUN IN SLOWDOWN (LOW SPEED)	DELAY IN OPERATIONS	3
SSR3	SPEED SELECT RELAY COIL	WHEN ENERGIZED SELECTS BRIDGE SLOW SPEED	A1. FAILS OPEN B1. INTERNAL PART FAILURE	BRIDGE WILL NOT RUN IN SLOW SPEED	DELAY IN OPERATIONS	3
	NO.O CONTACTS IN SERIES WITH BRIDGE CONTROLLER SLOW SPEED INPUT LINE	WHEN CLOSED SELECTS BRIDGE SLOW SPEED	A1. FAILS OPEN B1. INTERNAL PART FAILURE	BRIDGE WILL NOT RUN IN SLOW SPEED	DELAY IN OPERATIONS	3
			A2. FAILS CLOSED B2. INTERNAL PART FAILURE	BRIDGE WILL NOT RUN IN SLOW SPEED	DELAY IN OPERATIONS	3
	NO.O CONTACTS IN SERIES WITH TERMINAL 2 OF EIB BOARD OF MOTOR A CONTROLLER	WHEN CLOSED BYPASSES 20K RESISTOR TO PROVIDE CORRECT LEVEL TO HOIST SPEED INDICATOR	A1. FAILS OPEN B1. INTERNAL PART FAILURE	BRIDGE SPEED INDICATOR WILL NOT INDICATE CORRECT SPEED	NONE. REQUIRES MULTIPLE FAILURES	3
			A2. FAILS CLOSED B2. INTERNAL PART FAILURE	BRIDGE SPEED INDICATOR WILL NOT INDICATE CORRECT SPEED	NONE. REQUIRES MULTIPLE FAILURES	3

FAILURE MODES AND EFFECTS ANALYSIS (FMEA) WORKSHEET

System: 30 TON BRIDGE CRANE **Program:** SPACE STATION **Facility/Station Set:** SSPF

Subsystem: ELECTRICAL CONTROLS, HOIST

Drawing No.: 101A16061 **Sheet No.:** 1 TO 20 **Page:** 117 **of** 156 **Date:** 18 March, 2005

PMN: K61-2944 **Baseline:** 580.01 **Prepared by:** W. DiMeo, Boeing

FIND NO. PART NO.	PART NAME	PART FUNCTION	A. FAILURE MODE B. CAUSE C. FMN D. DETECTION METHOD E. CORRECTING ACTION F. TIME TO EFFECT G. TIMEFRAME	FAILURE EFFECT ON SYSTEM PERFORMANCE	FAILURE EFFECT ON FLIGHT HARDWARE AND/OR PERSONNEL SAFETY	CRIT CAT
NONE	SPEED SELECT SWITCH	N.O. OPEN SWITCH. WHEN CLOSED SELECTS SLOW SPEED	A1. FAILS OPEN B1. INTERNAL PART FAILURE	BRIDGE WILL NOT RUN IN SLOW SPEED	DELAY IN OPERATIONS	3
			A2. FAILS CLOSED B2. INTERNAL PART FAILURE	BRIDGE WILL ONLY RUN IN SLOW SPEED	DELAY IN OPERATIONS	3
	REVERSE EOT LIMIT SWITCH	WHEN OPENS(INDICATING REVERSE LIMIT REACHED) DISABLES BRIDGE REVERSE CIRCUITS	A1. FAILS OPEN B1. INTERNAL PART FAILURE	BRIDGE WILL NOT OPERATE IN REVERSE MODE	DELAY IN OPERATIONS	3
			A2. FAILS CLOSED B2. INTERNAL PART FAILURE	BRIDGE WILL NOT STOP WHEN REVERSE LIMIT REACHED. E-STOP WILL STOP BRIDGE	NONE. REQUIRES MULTIPLE FAILURES	3
	ANTI-COLLISION LIMIT SWITCH	WHEN OPEN (INDICATING FORWARD LIMIT EXCEEDED) INHIBITS BRIDGE FORWARD CIRCUITS	A1. FAILS OPEN B1. INTERNAL PART FAILURE	BRIDGE WILL NOT MOVE IN FORWARD DIRECTION	DELAY IN OPERATIOS	3
			A2. FAILS CLOSED B2. INTERNAL PART FAILURE	BRIDGE WILL NOT STOP WHEN FORWARD LIMIT IS REACHED. E-STOP WILL STOP BRIDGE	DELAY IN OPERATIONS	3

FAILURE MODES AND EFFECTS ANALYSIS (FMEA) WORKSHEET

System: 30 TON BRIDGE CRANE **Program:** SPACE STATION **Facility/Station Set:** SSPF

Subsystem: ELECTRICAL CONTROLS, HOIST

Drawing No.: 101A16061 **Sheet No.:** 1 TO 20 **Page:** 118 of 156 **Date:** 18 March, 2005

PMN: K61-2944 **Baseline:** 580.01 **Prepared by:** W. DiMeo, Boeing

FIND NO. PART NO.	PART NAME	PART FUNCTION	A. FAILURE MODE B. CAUSE C. FMN D. DETECTION METHOD E. CORRECTING ACTION F. TIME TO EFFECT G. TIMEFRAME	FAILURE EFFECT ON SYSTEM PERFORMANCE	FAILURE EFFECT ON FLIGHT HARDWARE AND/OR PERSONNEL SAFETY	CRIT CAT
BF	BRIDGE MASTER SWITCH	WHEN CLOSED ENABLES BRIDGE FORWARD RELAY COIL	A1. FAILS OPEN B1. INTERNAL PART FAILURE	BRIDGE WILL NOT OPEARTE IN FORWARD DIRECTION	NONE. REQUIRES MULTIPLE FAILURES	3
			A2. FAILS CLOSED B2. INTERNAL PART FAILURE	BRIDGE CONTINUOSLY ENABLED IN FORWARD DIRECTION. E-STOP OR ANTI-COLLISION SWITCH WILL STOP BRIDGE TRAVEL	DELAY IN OPERATIONS	3
BR	BRIDGE MASTER SWITCH	WHEN CLOSED ENABLES BRIDGE REVERSE RELAY COIL	A1. FAILS OPEN B1. INTERNAL PART FAILURE	BRIDGE WILL NOT OPEARTE IN REVERSE DIRECTION	NONE. REQUIRES MULTIPLE FAILURES	3
			A2. FAILS CLOSED B2. INTERNAL PART FAILURE	BRIDGE CONTINUOSLY ENABLED IN FORWARD DIRECTION. E-STOP OR ANTI-COLLISION SWITCH WILL STOP BRIDGE TRAVEL	DELAY IN OPERATIONS	3
	BRIDGE MOTOR CONTROLLER	THROUGH EXTERNAL BRIDGE CONTROL LOGIC (RELAY) CONTROLS POWER TO BRIDGE MOTOR BY MONITORING TORQUE, SPEED, LOAD, AND BRAKE CONDITIONS.	A1. NO INPUT B1. INTERNAL PART FAILURE	BRIDGE MOTOR WILL NOT OPERATE	NONE. REQUIRES DOUBLE FAILURE	3
BJM	BRIDGE MOTOR CONTROLLER JUNCTION MODULE	THROUGH EXTERNAL BRIDGE CONTROL LOGIC (RELAY) CONTROLS POWER TO BRIDGE MOTOR BY MONITORING TORQUE, SPEED, LOAD, AND BRAKE	A2. INCORRECT OUTPUT (INCORRECT LEVEL) B2. INTERNAL PART FAILURE	MORE THAN ONE CONTROLLER COMPONENT PLUS SOFTWARE LIMIT WOULD HAVE TO FAIL FOR CRITICAL FAULT CONDITION TO OCCUR	DELAY IN OPERATIONS	BJM

FAILURE MODES AND EFFECTS ANALYSIS (FMEA) WORKSHEET

System: 30 TON BRIDGE CRANE **Program:** SPACE STATION **Facility/Station Set:** SSPF

Subsystem: ELECTRICAL CONTROLS, HOIST

Drawing No.: 101A16061 **Sheet No.:** 1 TO 20 **Page:** 119 **of** 156 **Date:** 18 March, 2005

PMN: K61-2944 **Baseline:** 580.01 **Prepared by:** W. DiMeo, Boeing

FIND NO. PART NO.	PART NAME	PART FUNCTION	A. FAILURE MODE B. CAUSE C. FMN D. DETECTION METHOD E. CORRECTING ACTION F. TIME TO EFFECT G. TIMEFRAME	FAILURE EFFECT ON SYSTEM PERFORMANCE	FAILURE EFFECT ON FLIGHT HARDWARE AND/OR PERSONNEL SAFETY	CRIT CAT
FR4	FAULT RELAY COIL4	WHEN NOT ENERGIZED BY BRIDGE CONTROLLER RELAYS AC4 AND N4 (LINE CONTACTOR) ARE CLOSED	A1. FAILS OPEN B1. INTERNAL PART FAILURE	BRIDGE WILL NOT MOVE IN REVERSE DIRECTION	DELAY IN OPERATIONS	3
	N.O. CONTACTS IN SERIES WITH AC4 AUXILIARY RELAY COIL	WHEN CLOSED ENABLES AC4'S COIL	A1. FAILS OPEN B1. INTERNAL PART FAILURE	BRIDGE WILL NOT OPERATE	DELAY IN OPERATIONS	3
			A2. FAILS CLOSED B2. INTERNAL PART FAILURE	A FAULT AS SEEN BY MOTOR CONTROLLER WILL NOT OPEN AC4'S CIRCUIT BUT N4 (LINE CONTACTOR) WILL OPEN	DELAY IN OPERATIONS	3
	N.O. CONTACTS IN SERIES WITH N4 CONTACTOR COIL	WHEN CLOSED ENABLES N4 COIL	A1. FAILS OPEN B1. INTERNAL PART FAILURE	BRIDGE WILL NOT OPERATE	DELAY IN OPERATIONS	3
			A2. FAILS CLOSED B2. INTERNAL PART FAILURE	A FAULT AS SEEN BY MOTOR CONTROLLER WILL NOT OPEN N4'S CIRCUIT BUT AC4 WILL OPEN	DELAY IN OPERATIONS	3
D1201	COIL SUPRESSION DIODE ACROSS FR4 COIL	REDUCES BACK EMF ACROSS FR4 COIL FOR INCREASED LIFE OF RELAY AND PREVENTION OF INTERMITENT OPERATION	A1. FAILS OPEN B1. INTERNAL PART FAILURE	REDUCES LIFE/POSSIBLE INTERMITENT OPERATION OF FR4 RELAY	NONE. REQUIRES MULTIPLE FAILURES	3
			A2. FAILS SHORTED B2. INTERNAL PART FAILURE	BRIDGE WILL ONLY OPERATE	DELAY IN OPERATIONS	3

FAILURE MODES AND EFFECTS ANALYSIS (FMEA) WORKSHEET

System: 30 TON BRIDGE CRANE **Program:** SPACE STATION **Facility/Station Set:** SSPF

Subsystem: ELECTRICAL CONTROLS, HOIST

Drawing No.: 101A16061 **Sheet No.:** 1 TO 20 **Page:** 120 **of** 156 **Date:** 18 March, 2005

PMN: K61-2944 **Baseline:** 580.01 **Prepared by:** W. DiMeo, Boeing

FIND NO. PART NO.	PART NAME	PART FUNCTION	A. FAILURE MODE B. CAUSE C. FMN D. DETECTION METHOD E. CORRECTING ACTION F. TIME TO EFFECT G. TIMEFRAME	FAILURE EFFECT ON SYSTEM PERFORMANCE	FAILURE EFFECT ON FLIGHT HARDWARE AND/OR PERSONNEL SAFETY	CRIT CAT
BCR4	BRAKE CONTROL RELAY 4 COIL	WHEN ENERGIZED ENABLES BRAKE CONTACTOR BC4 FOR BRAKE RELEASE	A1. FAILS OPEN B1. INTERNAL PART FAILURE	BRIDGE FOR BRIDGE WILL NOT RELEASE. HOIST INOPERATIVE	DELAY IN OPERATIONS	3
	N.O. CONTACTS IN SERIES WITH BC4 (BRAKE CONTACTOR)	WHEN ENERGIZED ENABLES BRAKE CONTACTOR BC4 FOR BRAKE RELEASE	A1. FAILS OPEN B1. INTERNAL PART FAILURE	BRIDGE FOR BRIDGE WILL NOT RELEASE. HOIST INOPERATIVE	DELAY IN OPERATIONS	3
			A2. FAILS CLOSED B2. INTERNAL PART FAILURE	BRIDGE CONTROLLLER WILL HAVE CONTINUOS REVERSE COMMAND ON ITS INPUT	NONE. REQUIRES MULTIPLE FAILURES	3
D1202	COIL SUPRESSION DIODE ACROSS BCR4 COIL	REDUCES BACK EMF ACROSS BCR4 COIL FOR INCREASED LIFE OF RELAY AND PREVENTION OF INTERMITENT OPERATION	A1. FAILS OPEN B1. INTERNAL PART FAILURE	REDUCES LIFE/POSSIBLE INTERMITENT OPERATION OF BCR4 RELAY	NONE. REQUIRES MULTIPLE FAILURES	3
			A2. FAILS SHORTED B2. INTERNAL PART FAILURE	BRIDGE WILL ONLY OPERATE	DELAY IN OPERATIONS	3
ZSR4	ZERO SPEED RELAY COIL	WHEN ENERGIZED (BY MOTOR CONTROLLER) INDICATES (TO CONTROL LOGIC) BRIDGE IS STOPPED	A1. FAILS OPEN B1. INTERNAL PART FAILURE	ZERO SPEED OF BRIDGE WILL NOT BE FLAGGED BY ZSR4 (WHICH INITIATES DRIVE DISABLE AND POWER REMOVAL VIA N4.. TIME DELAY RELAY WILL TIME OUT INITIATING ABOVE SEQUENCE)	NONE. REQUIRES MULTIPLE FAILURES	3
			A2. FAILS CLOSED B2. INTERANL PART FAILURE	BRIDGE INOPERATIVE	DELAY IN OPERATIONS	3

FAILURE MODES AND EFFECTS ANALYSIS (FMEA) WORKSHEET

System: 30 TON BRIDGE CRANE **Program:** SPACE STATION **Facility/Station Set:** SSPF

Subsystem: ELECTRICAL CONTROLS, HOIST

Drawing No.: 101A16061 **Sheet No.:** 1 TO 20 **Page:** 121 **of** 156 **Date:** 18 March, 2005

PMN: K61-2944 **Baseline:** 580.01 **Prepared by:** W. DiMeo, Boeing

FIND NO. PART NO.	PART NAME	PART FUNCTION	A. FAILURE MODE B. CAUSE C. FMN D. DETECTION METHOD E. CORRECTING ACTION F. TIME TO EFFECT G. TIMEFRAME	FAILURE EFFECT ON SYSTEM PERFORMANCE	FAILURE EFFECT ON FLIGHT HARDWARE AND/OR PERSONNEL SAFETY	CRIT CAT
D1203	COIL SUPRESSION DIODE ACROSS ZSR4 COIL	REDUCES BACK EMF ACROSS ZSR4 COIL FOR INCREASED LIFE OF RELAY AND PREVENTION OF INTERMITENT OPERATION	A1. FAILS OPEN B1. INTERNAL PART FAILURE	REDUCES LIFE/POSSIBLE INTERMITENT OPERATION OF BCR4 RELAY	NONE. REQUIRES MULTIPLE FAILURES	3
			A2. FAILS SHORTED B2. INTERNAL PART FAILURE	ZSR4 RELAY WILL NOT ENERGIZE	NONE. REQUIRES MULTIPLE FAILURE	3
CB1201	CIRCUIT BREAKER 3 POLE	CONTROLS POWER APPLICATION TO BRIDGE MOTOR CONTROLLER	A1. OPENS PREMATURELY B1. INTERNAL PART FAILURE	BRIDGE INOPERATIVE	DELAY IN OPERATIONS	3
			A2. FAILS TO OPEN B2. INTERANL PART FAILURE	BREAKER UPSTREAM WILL OPEN CIRCUIT	DELAY IN OPERATIONS	3
FU1201, FU1202, FU1203	LINE FUSE 3, ONE FOR EACH A.C. INPUT LINE	PROTECTS CIRCUIT FROM OVERLOAD	A1. OPEN PREMATURELY B1. INTERNAL PART FAILURE	BRIDGE WILL NOT OPERATE	DELAY IN OPERATIONS	3
			A2. FAILS TO OPEN B2. INTERNAL PART FAILURE	CIRCUIT BREAKER UPSTREAM WILL OPEN	DELAY IN OPERATIONS	3
NONE	STEP DOWN TRANSFORMER FOR MOTOR B CONTROLLER	STEPS DOWN INPUT VOLTAGE FROM 460VAC TO 120VAC FOR MOTOR CONTROLLER	A1. FAILS OPEN B1. INTERNAL PART FAILURE	BRIDGE WILL NOT OPERATE	DELAY IN OPERATIONS	3
			A2. FAILS CLOSED B2. INTERNAL PART FAILURE	INPUT FUSES TO PRIMARY CIRCUIT WILL OPEN. BRIDGE WILL NOT OPERATE	DELAY IN OPERATIONS	3

FAILURE MODES AND EFFECTS ANALYSIS (FMEA) WORKSHEET

System: 30 TON BRIDGE CRANE **Program:** SPACE STATION **Facility/Station Set:** SSPF

Subsystem: ELECTRICAL CONTROLS, HOIST

Drawing No.: 101A16061 **Sheet No.:** 1 TO 20 **Page:** 122 of 156 **Date:** 18 March, 2005

PMN: K61-2944 **Baseline:** 580.01 **Prepared by:** W. DiMeo, Boeing

FIND NO. PART NO.	PART NAME	PART FUNCTION	A. FAILURE MODE B. CAUSE C. FMN D. DETECTION METHOD E. CORRECTING ACTION F. TIME TO EFFECT G. TIMEFRAME	FAILURE EFFECT ON SYSTEM PERFORMANCE	FAILURE EFFECT ON FLIGHT HARDWARE AND/OR PERSONNEL SAFETY	CRIT CAT
FU1205, FU1206	FUSES IN LINE WITH INPUT LINES TO PRIMARY OF STEP-DOWN TRANSFORMER	PROTECT BRIDGE MOTOR CONTROLLER/TRANSFORMER FROM SHORT CIRCUIT	A1. OPEN PREMATURELY B1. INTERNAL PART FAILURE	BRIDGE INOPERATIVE	DELAY IN OPERATIONS	3
			A2. FAILS TO OPEN B2. INTERNAL PART FAILURE	UPSTREAM BREAKER WILL OPEN IF EITHER OF THESE FUSES FAIL TO OPERATE	DELAY IN OPERATIONS	3
MOV1201	METAL OXIDE VARISTOR	PROTECTS BRIDGE CONTROLLER FROM SURGE CURRENT	A1. FAILS OPEN B1. INTERNAL PART FAILURE	NONE	NONE. REQUIRES MULTIPLE FAILURES	3
			A2. FAILS TO OPERATE B2. INTERNAL PART FAILURE	POSSIBLE DAMAGE TO BRIDGE CONTROLLLER	DELAY IN OPERATIONS	3
FU1207	FUSES IN LINE WITH SECONDARY OUTPUT OF STEP-DOWN TRANSFORMER	PROTECT STEP DOWN TRANSFORMER FROM DOWN STREAM OVERLOAD	A1. OPEN PREMATURELY B1. INTERNAL PART FAILURE	BRIDGE WILL NOT OPERATE	DELAY IN OPERATIONS	3
			A2. FAILS TO OPERATE B2. INTERNAL PART FAILURE	DOWNSTREAM BREAKER WILL OPEN CIRCUIT FOR PROTECTION	DELAY IN OPERATIONS	3
NONE	BRIDGE SPEED CONTROL	POTENTIOMETER USED FOR SELECTING BRIDGE SPEED	A1. FAILS OPEN B1. INTERNAL PART FAILURE	BRIDGE WILL NOT OPERATE	DELAY IN OPERATIONS	3
			A2. FAILS CLOSED B2. INTERNAL PART FAILURE	BRIDGE WILL ONLY RUN AT ONE SPEED WITHIN RANGE SELECTED	DELAY IN OPERATIONS	3

FAILURE MODES AND EFFECTS ANALYSIS (FMEA) WORKSHEET

System: 30 TON BRIDGE CRANE **Program:** SPACE STATION **Facility/Station Set:** SSPF

Subsystem: ELECTRICAL CONTROLS, HOIST

Drawing No.: 101A16061 **Sheet No.:** 1 TO 20 **Page:** 123 of 156 **Date:** 18 March, 2005

PMN: K61-2944 **Baseline:** 580.01 **Prepared by:** W. DiMeo, Boeing

FIND NO. PART NO.	PART NAME	PART FUNCTION	A. FAILURE MODE B. CAUSE C. FMN D. DETECTION METHOD E. CORRECTING ACTION F. TIME TO EFFECT G. TIMEFRAME	FAILURE EFFECT ON SYSTEM PERFORMANCE	FAILURE EFFECT ON FLIGHT HARDWARE AND/OR PERSONNEL SAFETY	CRIT CAT
FU1204	FUSES IN LINE WITH BRIDGE MOTOR ARMATURE	PROTECT POWER SECTION OF CONTROLLER FROM OVERLOAD CONDITION	A1. OPEN PREMATURELY B1. INTERNAL PART FAILURE	BRIDGE WILL NOT OPERATE	DELAY IN OPERATIONS	3
			A2. FAILS TO OPERATE B2. INTERNAL PART FAILURE	DOWNSTREAM BREAKER WILL OPEN CIRCUIT FOR PROTECTION	DELAY IN OPERATIONS	3
FU1208, FU1209	FUSES IN LINE WITH A.C. INPUT TO BRIDGE BRAKE SOLENOIDS	PROTECT BRIDGE BRALE SOLENOIDS FROM ELECTRICAL DAMAGE	A1. OPEN PREMATURELY B1. INTERNAL PART FAILURE	BRIDGE BRAKES WILL NOT RELEASE. HOIST INOPERATIVE	DELAY IN OPERATIONS	3
			A2. FAILS TO OPERATE B2. INTERNAL PART FAILURE	POSSIBLE DAMAGE TO BRIDGE BRAKE RECTIFIER CONTROLLER	DELAY IN OPERATIONS	3
NONE	BRIDGE DC BRAKE COIL	WHEN ENERGIZED CAUSES HOIST B BRAKE TO RELEASE	A1. FAILS OPEN B1. INTERNAL PART FAILURE	BRIDGE BRAKE WILL NOT RELEASE	DELAY IN OPERATION	3
	BRIDGE LINE ENCODER	ENCODES BRIDGE MOTOR ARMATURE LOCATION INDICATION INTO DIGITAL FORMAT FOR MOTOR CONTROLLER	A1. INCORRECT OUTPUT B1. INTERNAL PART FAILURE	BRIDGE MOTOR CONTROLLER WILL NOT KNOW BRIDGE LOCATION	NONE. REQUIRES MULTIPLE FAILURES	3
			A2. NO OUTPUT B2. INTERNAL PART FAILURE	BRIDGE MOTOR CONTROLLER WILL NOT KNOW BRIDGE LOCATION	NONE. REQUIRES MULTIPLE FAILURES	3

FAILURE MODES AND EFFECTS ANALYSIS (FMEA) WORKSHEET

System: 30 TON BRIDGE CRANE **Program:** SPACE STATION **Facility/Station Set:** SSPF

Subsystem: ELECTRICAL CONTROLS, HOIST

Drawing No.: 101A16061 **Sheet No.:** 1 TO 20 **Page:** 124 **of** 1556 **Date:** 18 March, 2005

PMN: K61-2944 **Baseline:** 580.01 **Prepared by:** W. DiMeo, Boeing

FIND NO. PART NO.	PART NAME	PART FUNCTION	A. FAILURE MODE B. CAUSE C. FMN D. DETECTION METHOD E. CORRECTING ACTION F. TIME TO EFFECT G. TIMEFRAME	FAILURE EFFECT ON SYSTEM PERFORMANCE	FAILURE EFFECT ON FLIGHT HARDWARE AND/OR PERSONNEL SAFETY	CRIT CAT
NONE	BRIDGE BRAKE SOLENOID NO. 1	WHEN ENERGIZED DISENGAGES BRAKE	A1. FAILS OPEN B1. INTERNAL PART FAILURE	BRIDGE BRAKE NO. 1 WILL NOT DISENGAGE	DELAY IN OPERATION	3
	BRIDGE BRAKE SOLENOID NO. 2	WHEN ENERGIZED DISENGAGES BRAKE	A1. FAILS OPEN B1. INTERNAL PART FAILURE	BRIDGE BRAKE NO. 2 WILL NOT DISENGAGE	DELAY IN OPERATION	3
R1201 AND R1202	POTENTIOMETERS IN SERIES WITH SHUNT FIELDS NO.1 AND NO.2 RESPECTIVELY	ALLOWS FOR ADJUSTMENT OF BRIDGE SHUNT WINDING CURRENT FOR SHUNT FIELDS NO. 1 AND NO. 2	A1. FAILS OPEN B1. INTERNAL PART FAILURE	AFFECTED MOTOR WILL NOT OPERATE	DELAY IN OPERATION	3
MOWM1401	BRIDGE MOTOR 1 OVERTEMP MODULE	MONITORS BRIDGE MOTOR TEMPERATURE	A1. NO/LOW OUTPUT B1. INTERNAL PART FAILURE	MOTOR OVERTEMP WILL NOT RESULT IN MOTOR OVERTEMP INDICATION. MOTOR OVERTEMP WARNING WILL	NONE. REQUIRES MULTIPLE FAILURES	3
			A2. WRONG OUTPUT B2. INTERNAL PART FAILURE	MOTOR OVERTEMP WILL NOT RESULT IN MOTOR OVERTEMP INDICATION. MOTOR OVERTEMP WARNING WILL	NONE. REQUIRES MULTIPLE FAILURES	3
	BRIDGE MOTOR 1 OVERTEMP WARNING MODULE	MONITORS BRIDGE MOTOR TEMPERATURE	A1. NO/LOW OUTPUT B1. INTERNAL PART FAILURE	MOTOR OVERTEMP WARNING WILL NOT RESULT IN MOTOR OVERTEMP WARNING INDICATION. MOTOR OVERTEMP WARNING WILL	NONE. REQUIRES MULTIPLE FAILURES	
			A2. WRONG OUTPUT B2. INTERNAL PART FAILURE	MOTOR OVERTEMP WARNING WILL NOT RESULT IN MOTOR OVERTEMP WARNING INDICATION. MOTOR OVERTEMP WARNING WILL	NONE. REQUIRES MULTIPLE FAILURES	

FAILURE MODES AND EFFECTS ANALYSIS (FMEA) WORKSHEET

System: 30 TON BRIDGE CRANE **Program:** SPACE STATION **Facility/Station Set:** SSPF

Subsystem: ELECTRICAL CONTROLS, HOIST

Drawing No.: 101A16061 **Sheet No.:** 1 TO 20 **Page:** 125 **of** 156 **Date:** 18 March, 2005

PMN: K61-2944 **Baseline:** 580.01 **Prepared by:** W. DiMeo, Boeing

FIND NO. PART NO.	PART NAME	PART FUNCTION	A. FAILURE MODE B. CAUSE C. FMN D. DETECTION METHOD E. CORRECTING ACTION F. TIME TO EFFECT G. TIMEFRAME	FAILURE EFFECT ON SYSTEM PERFORMANCE	FAILURE EFFECT ON FLIGHT HARDWARE AND/OR PERSONNEL SAFETY	CRIT CAT
MOWM1402	BRIDGE MOTOR 2 OVERTEMP MODULE	MONITORS BRIDGE MOTOR TEMPERATURE	A1. NO/LOW OUTPUT B1. INTERNAL PART FAILURE	MOTOR OVERTEMP WILL NOT RESULT IN MOTOR OVERTEMP INDICATION. MOTOR OVERTEMP WARNING WILL	NONE. REQUIRES MULTIPLE FAILURES	3
			A2. WRONG OUTPUT B2. INTERNAL PART FAILURE	MOTOR OVERTEMP WILL NOT RESULT IN MOTOR OVERTEMP INDICATION. MOTOR OVERTEMP WARNING WILL	NONE. REQUIRES MULTIPLE FAILURES	3
	BRIDGE MOTOR 2 OVERTEMP WARNING MODULE	MONITORS BRIDGE MOTOR TEMPERATURE	A1. NO/LOW OUTPUT B1. INTERNAL PART FAILURE	MOTOR OVERTEMP WARNING WILL NOT RESULT IN MOTOR OVERTEMP WARNING INDICATION. MOTOR OVERTEMP WARNING WILL	NONE. REQUIRES MULTIPLE FAILURES	3
			A2. WRONG OUTPUT B2. INTERNAL PART FAILURE	MOTOR OVERTEMP WARNING WILL NOT RESULT IN MOTOR OVERTEMP WARNING INDICATION. MOTOR OVERTEMP WARNING WILL	NONE. REQUIRES MULTIPLE FAILURES	3
MOR4	MOTOR 1 OVERTEMP RELAY COIL	WHEN ENERGIZED, BY MOTOR OVERTEMP MODULE, CAUSES EMERGENCY STOP RELAY TO HALT BRIDGE	A1. FAILS OPEN B1. INTERNAL PART FAILURE	OVERHEAT WILL NOT RESULT IN HALTING BRIDGE OPERATION. HOWEVER, OVERTEMP WARNING WILL	NONE. REQUIRES DOUBLE FAILURE	3

FAILURE MODES AND EFFECTS ANALYSIS (FMEA) WORKSHEET

System: 30 TON BRIDGE CRANE **Program:** SPACE STATION **Facility/Station Set:** SSPF

Subsystem: ELECTRICAL CONTROLS, HOIST

Drawing No.: 101A16061 **Sheet No.:** 1 TO 20 **Page:** 126 **of 1567** **Date:** 18 March, 2005

PMN: K61-2944 **Baseline:** 580.01 **Prepared by:** W. DiMeo, Boeing

FIND NO. PART NO.	PART NAME	PART FUNCTION	A. FAILURE MODE B. CAUSE C. FMN D. DETECTION METHOD E. CORRECTING ACTION F. TIME TO EFFECT G. TIMEFRAME	FAILURE EFFECT ON SYSTEM PERFORMANCE	FAILURE EFFECT ON FLIGHT HARDWARE AND/OR PERSONNEL SAFETY	CRIT CAT
MOR4	N.O. CONTACTS IN SERIES WITH MOTOR 1 OVERHEAT WARNING INDICATOR	WHEN CLOSED ILLUMINATES MOTOR OVERHEAT WARNING LAMP	A1. FAILS OPEN B1. INTERNAL PART FAILURE	MOTOR OVERHEAT WARNING LAMP WILL NOT ILLUMINATE WITH OVERTEMP WARNING CONDITION	NONE. REQUIRES DOUBLE FAILURE	3
			A2. FAILS CLOSED B2. INTERANL PART FAILURE	MOTOR OVERHEAT WARNING LAMP WILL BE CONTINUOSLY ILLUMINATED	DELAY IN OPERATIONS	3
	N.C. CONTACTS IN SERIES WITH ESR4 RELAY COIL	WHEN OPEN CAUSES BRIDGE TO HALT DUE TO OPENING OF ESR4 CIRCUIT	A1. FAILS OPEN B1. INTERNAL PART FAILURE	EMERGENCY STOP RELAY ESR4 WILL BE DE-ENERGIZED CAUSING BRIDGE TO HAULT	DELAY IN OPERATIONS	3
MOWR4	MOTOR 1 OVERTEMP WARNING RELAY COIL	WHEN ENERGIZED ILLUMINATES MOTOR TEMPERATYRE WARNING LAMP	A1. FAILS OPEN B1. INTERNAL PART FAILURE	MOTOR TEMPERATURE WARNING WILL NOT BE INDICATED. MOTOR OVERHEAT EVENTUALLY WILL	DELAY IN OPERATIONS	3
	N.O. CONTACTS IN SERIES WITH MOTOR 1 TEMPERATURE WARNING LAMP	WHEN CLOSED ILLUMINATES MOTOR TEMPERATURE WARNING LAMP	A1. FAILS OPEN B1. INTERNAL PART FAILURE	MOTOR TEMPERATURE WARNING WILL NOT BE INDICATED, MOTOR OVERHEAT EVENTUALLY WILL	DELAY IN OPERATIONS	3
			A2. FAILS CLOSED B2. INTERNAL PART FAILURE	MOTOR TEMPERATURE WARNING INDICATOR LAMP CONTINUOSLY ILLUMINATED	DELAY IN OPERATIONS	3

FAILURE MODES AND EFFECTS ANALYSIS (FMEA) WORKSHEET

System: 30 TON BRIDGE CRANE **Program:** **SPACE STATION** **Facility/Station Set:** SSPF

Subsystem: ELECTRICAL CONTROLS, HOIST

Drawing No.: 101A16061 **Sheet No.:** 1 TO 20 **Page:** 127 **of** **1567** **Date:** 18 March, 2005

PMN: K61-2944 **Baseline:** 580.01 **Prepared by:** W. DiMeo, Boeing

FIND NO. PART NO.	PART NAME	PART FUNCTION	A. FAILURE MODE B. CAUSE C. FMN D. DETECTION METHOD E. CORRECTING ACTION F. TIME TO EFFECT G. TIMEFRAME	FAILURE EFFECT ON SYSTEM PERFORMANCE	FAILURE EFFECT ON FLIGHT HARDWARE AND/OR PERSONNEL SAFETY	CRIT CAT
MOR5	MOTOR 2 OVERTEMP RELAY COIL	WHEN ENERGIZED BY MOTOR OVERTEMP MODULE, CAUSES EMERGENCY STOP RELAY TO HALT BRIDGE	A1. FAILS OPEN B1. INTERNAL PART FAILURE	OVERHEAT WILL NOT RESULT IN HALTING BRIDGE OPERATION. HOWEVER, OVERTEMP WARNING WILL	NONE. REQUIRES MULTIPLE FAILURES	3
			A2. FAILS CLOSED B2. INTERNAL PART FAILURE	MOTOR OVERHEAT WARNING LAMP WILL BE CONTINUOSLY ILLUMINATED	DELAY IN OPERATIONS	3
	N.O. CONTACTS IN SERIES WITH MOTOR 2 OVERHEAT WARNING INDICATOR	WHEN CLOSED ILLUMINATES MOTOR OVERHEAT WARNING LAMP	A1. FAILS OPEN B1. INTERNAL PART FAILURE	MOTOR OVERHEAT WARNING LAMP WILL NOT ILLUMINATE WITH OVERTEMP WARNING CONDITION	NONE. REQUIRES DOUBLE FAILURE	3
			A2. FAILS CLOSED B2. INTERANL PART FAILURE	MOTOR OVERHEAT WARNING LAMP WILL BE CONTINUOSLY ILLUMINATED	DELAY IN OPERATIONS	3
	N.C. CONTACTS IN SERIES WITH ESR4 RELAY COIL	WHEN OPEN CAUSES BRIDGE TO HALT DUE TO OPENING OF ESR4 CIRCUIT	A1. FAILS OPEN B1. INTERNAL PART FAILURE	EMERGENCY STOP RELAY ESR4 WILL BE DE-ENERGIZED CAUSING BRIDGE TO HAULT	DELAY IN OPERATIONS	3
MOWR4	MOTOR 2 OVERTEMP WARNING RELAY COIL	WHEN ENERGIZED ILLUMINATES MOTOR TEMPERATYRE WARNING LAMP	A1. FAILS OPEN B1. INTERNAL PART FAILURE	MOTOR TEMPERATURE WARNING WILL NOT BE INDICATED. MOTOR OVERHEAT EVENTUALLY WILL	DELAY IN OPERATIONS	3

FAILURE MODES AND EFFECTS ANALYSIS (FMEA) WORKSHEET

System: 30 TON BRIDGE CRANE **Program:** SPACE STATION **Facility/Station Set:** SSPF

Subsystem: ELECTRICAL CONTROLS, HOIST

Drawing No.: 101A16061 **Sheet No.:** 1 TO 20 **Page:** 128 **of** 1567 **Date:** 18 March, 2005

PMN: K61-2944 **Baseline:** 580.01 **Prepared by:** W. DiMeo, Boeing

FIND NO. PART NO.	PART NAME	PART FUNCTION	A. FAILURE MODE B. CAUSE C. FMN D. DETECTION METHOD E. CORRECTING ACTION F. TIME TO EFFECT G. TIMEFRAME	FAILURE EFFECT ON SYSTEM PERFORMANCE	FAILURE EFFECT ON FLIGHT HARDWARE AND/OR PERSONNEL SAFETY	CRIT CAT
MOWR5	N.O. CONTACTS IN SERIES WITH MOTOR TEMPERATURE WARNING LAMP	WHEN CLOSED ILLUMINATES MOTOR TEMPERATURE WARNING LAMP	A1. FAILS OPEN B1. INTERNAL PART FAILURE	MOTOR TEMPERATURE WARNING WILL NOT BE INDICATED. MOTOR OVERHEAT EVENTUALLY	NONE. REQUIRES DOUBLE FAILURE	3
			A2. FAILS CLOSED B2. INTERANL PART FAILURE	MOTOR TEMPERATURE WARNING INDICATOR LAMP CONTINUOSLY ILLUMINATED	DELAY IN OPERATIONS	3
NONE	DOOR SWITCH	WHEN CLOSED CAUSES ENCLOSURE FLOURESCENT LAMP TO ILLUMINATE FOR MAINTENANCE ON MOTOR CONTROLLER	A1. FAILS OPEN B1. INTERNAL PART FAILURE	MAINTENACE PERSONNEL WILL HAVE DIFICULTY SEEING INSIDE OF CABINET	NONE.	3
			A2. FAILS CLOSED B2. INTERNAL PART FAILURE	FLOURESCENT LAMP CONTINUOSLY ILLUMINATE	NONE	3
NONE	FLOURESCENT LAMP INSIDE MOTOR CONTROLLER CABINET	PROVIDES LIGHT FOR MAINTENANCE PERSONNEL	A1. FAILS OPEN B1. INTERNAL PART FAILURE	MAINTENACE PERSONNEL WILL HAVE DIFFICULTY SEEING INSIDE OF CABINET	NONE	3
LTR4	LAMP TEST RELAY 4 COIL	WHEN ENERGIZED ITS CONTACTS ILLUMINATE ALL LAMPS FOR TEST	A1. FAILS OPEN B1. INTERNAL PART FAILURE	LAMP TEST WILL NOT FUNCTION	DELAY IN OPERATIONS	3

FAILURE MODES AND EFFECTS ANALYSIS (FMEA) WORKSHEET

System: 30 TON BRIDGE CRANE **Program:** SPACE STATION **Facility/Station Set:** SSPF

Subsystem: ELECTRICAL CONTROLS, HOIST

Drawing No.: 101A16061 **Sheet No.:** 1 TO 20 **Page:** 129 **of** 156 **Date:** 18 March, 2005

PMN: K61-2944 **Baseline:** 580.01 **Prepared by:** W. DiMeo, Boeing

FIND NO. PART NO.	PART NAME	PART FUNCTION	A. FAILURE MODE B. CAUSE C. FMN D. DETECTION METHOD E. CORRECTING ACTION F. TIME TO EFFECT G. TIMEFRAME	FAILURE EFFECT ON SYSTEM PERFORMANCE	FAILURE EFFECT ON FLIGHT HARDWARE AND/OR PERSONNEL SAFETY	CRIT CAT
LTR4	N.O. CONTACTS IN SERIES WITH BRIDGE CONTROLLER INDICATOR LAMP	WHEN CLOSED TEST ITS ASSOCIATED LAMP	A1. FAILS OPEN B1. INTERNAL PART FAILURE	ASSOCIATED LAMP WILL NOT PASS TEST	DELAY IN OPERATIONS	3
			A2. FAILS CLOSED B2. INTERNAL PART FAILURE	ASOCIATED LAMP CONTINUOSLY ILLUMINATED	DELAY IN OPERATIONS	3
NONE	MOTOR 1 TEMPERATURE WARNING LAMPL	WHEN ILLUMINATED INDICATES MOTOR OVERTEMP WARNING	A1. FAILS OPEN B1. INTERNAL PART FAILURE	MOTOR TEMPERATURE WARNING WILL NOT BE INDICATED. MOTOR OVERHEAT EVENTUALLY WILL	NONE. REQUIRES MULTIPLE FAILURES	3
	MOTOR 1 OVERHEAT WARNING LAMP	WHEN ILLUMINATED INDICATES MOTOR OVERHEAT WARNING	A1. FAILS OPEN B1. INTERNAL PART FAILURE	MOTOR TEMPERATURE OVERHEAT WARNING WILL NOT BE INDICATED, MOTOR OVERHEAT EVENTUALLY WILL	NONE. REQUIRES MULTIPLE FAILURES	3
	MOTOR 2 TEMPERATURE WARNING LAMP	WHEN ILLUMINATED INDICATES MOTOR OVERHEAT WARNING	A1. FAILS OPEN B1. INTERNAL PART FAILURE	MOTOR TEMPERATURE WARNING WILL NOT BE INDICATED, MOTOR OVERHEAT EVENTUALLY WILL	NONE. REQUIRES MULTIPLE FAILURES	3
	MOTOR 2 OVERHEAT WARNING LAMP	WHEN ILLUMINATED INDICATES MOTOR OVERTEMP WARNING	A1. FAILS OPEN B1. INTERNAL PART FAILURE	MOTOR TEMPERATURE OVERHEAT WARNING WILL NOT BE INDICATED, MOTOR OVERHEAT EVENTUALLY WILL	NONE. REQUIRES MULTIPLE FAILURES	3

FAILURE MODES AND EFFECTS ANALYSIS (FMEA) WORKSHEET

System: 30 TON BRIDGE CRANE **Program:** SPACE STATION **Facility/Station Set:** SSPF

Subsystem: ELECTRICAL CONTROLS, HOIST

Drawing No.: 101A16061 **Sheet No.:** 1 TO 20 **Page:** 130 **of** 156 **Date:** 18 March, 2005

PMN: K61-2944 **Baseline:** 580.01 **Prepared by:** W. DiMeo, Boeing

FIND NO. PART NO.	PART NAME	PART FUNCTION	A. FAILURE MODE B. CAUSE C. FMN D. DETECTION METHOD E. CORRECTING ACTION F. TIME TO EFFECT G. TIMEFRAME	FAILURE EFFECT ON SYSTEM PERFORMANCE	FAILURE EFFECT ON FLIGHT HARDWARE AND/OR PERSONNEL SAFETY	CRIT CAT
NONE	MOTOR 1 OVERTEMP SENSOR	THERMISTOR WICH INPUTS VOLTAGE BASED ON MOTOR TEMPERATURE TO MOTOR OVERTEMP MODULE	A1. NO/LOW OUTPUT B1. INTERNAL PART FAILURE	MOTOR OVERTEMP WILL NOT RESULT IN MOTOR OVERTEMP INDICATION. MOTOR OVERTEMP WARNING WILL	NONE. REQUIRES MULTIPLE FAILURES	3
			A2. WRONG OUTPUT B2. INTERNAL PART FAILURE	MOTOR OVERTEMP WILL NOT RESULT IN MOTOR OVERTEMP INDICATION. MOTOR WARNING WILL	NONE. REQUIRES MULTIPLE FAILURES	3
	MOTOR 1 OVERTEMP WARNING SENSOR	THERMISTOR WICH INPUTS VOLTAGE BASED ON MOTOR TEMPERATURE TO MOTOR OVERTEMP WARNING MODULE	A1. NO/LOW OUTPUT B1. INTERNAL PART FAILURE	MOTOR OVERTEMP WILL NOT RESULT IN MOTOR OVERTEMP WARNING INDICATION. MOTOR OVERTEMP WILL	NONE. REQUIRES MULTIPLE FAILURES	3
			A2. WRONG OUTPUT B2. INTERNAL PART FAILURE	MOTOR OVERTEMP WILL NOT RESULT IN MOTOR OVERTEMP WARNING INDICATION. MOTOR OVERTEMP WILL	NONE. REQUIRES MULTIPLE FAILURES	3

FAILURE MODES AND EFFECTS ANALYSIS (FMEA) WORKSHEET

System: 30 TON BRIDGE CRANE **Program:** SPACE STATION **Facility/Station Set:** SSPF

Subsystem: ELECTRICAL CONTROLS, HOIST

Drawing No.: 101A16061 **Sheet No.:** 1 TO 20 **Page:** 131 **of** 156 **Date:** 18 March, 2005

PMN: K61-2944 **Baseline:** 580.01 **Prepared by:** W. DiMeo, Boeing

FIND NO. PART NO.	PART NAME	PART FUNCTION	A. FAILURE MODE B. CAUSE C. FMN D. DETECTION METHOD E. CORRECTING ACTION F. TIME TO EFFECT G. TIMEFRAME	FAILURE EFFECT ON SYSTEM PERFORMANCE	FAILURE EFFECT ON FLIGHT HARDWARE AND/OR PERSONNEL SAFETY	CRIT CAT
NONE	MOTOR 2 OVERTEMP WARNING SENSOR	THERMISTOR WICH INPUTS VOLTAGE BASED ON MOTOR TEMPERATURE TO MOTOR OVERTEMP WARNING MODULE	A1. NO/LOW OUTPUT B1. INTERNAL PART FAILURE	MOTOR OVERTEMP WILL NOT RESULT IN MOTOR OVERTEMP WARNING INDICATION. MOTOR OVERTEMP WILL	NONE. REQUIRES MULTIPLE FAILURES	3
			A2. WRONG OUTPUT B2. INTERNAL PART FAILURE	MOTOR OVERTEMP WILL NOT RESULT IN MOTOR OVERTEMP WARNING INDICATION. MOTOR OVERTEMP WILL	NONE. REQUIRES MULTIPLE FAILURES	3
DIU	BRIDGE DIGITAL INTERFACE UNIT	PROVIDES SIGNAL CONDITIONING FOR HOIST POSITION INDICATOR AND PROVIDES DATA COMMUNICATIONS BETWEEN LINE ENCODER AND REGULATOR CONTROL BOARD	A1. NO OUTPUT B1. INTERNAL PART FAILURE	BRIDGE MOTOR CONTROLLER WILL NOT KNOW HOIST B POSITION	NONE. REQUIRES MULTIPLE FAILURES	3
			A2. INCORRECT OUTPUT B2. INTERNAL PART FAILURE	ERRONEOUS BRIDGE POSITION DATA TO REGULATOR CONTROL BOARD. E-STOP CAN HALT CRANE OPERATIONS	NONE. REQUIRES MULTIPLE FAILURES	3
IPB	BRIDGE INTERFACE POWER BOARD	PROVIDES POWER TO OTHER CONTROLLER COMPONENTS AND TO SHUNT FIELD	A1. NO OUTPUT B1. INTERNAL PART FAILURE	BRIDGE INOPERATIVE	NONE. REQUIRES MULTIPLE FAILURES	3
			A2. INCORRECT OUTPUT B2. INTERNAL PART FAILURE	INCONSISTENT BRIDGE OPERATION	NONE. REQUIRES MULTIPLE FAILURES	3

FAILURE MODES AND EFFECTS ANALYSIS (FMEA) WORKSHEET

System: 30 TON BRIDGE CRANE **Program:** SPACE STATION **Facility/Station Set:** SSPF

Subsystem: ELECTRICAL CONTROLS, HOIST

Drawing No.: 101A16061 **Sheet No.:** 1 TO 20 **Page:** 132 **of** 156 **Date:** 18 March, 2005

PMN: K61-2944 **Baseline:** 580.01 **Prepared by:** W. DiMeo, Boeing

FIND NO. PART NO.	PART NAME	PART FUNCTION	A. FAILURE MODE B. CAUSE C. FMN D. DETECTION METHOD E. CORRECTING ACTION F. TIME TO EFFECT G. TIMEFRAME	FAILURE EFFECT ON SYSTEM PERFORMANCE	FAILURE EFFECT ON FLIGHT HARDWARE AND/OR PERSONNEL SAFETY	CRIT CAT
SOB	BRIDGE SNUBBER OVERVOLTAGE BOARD	PROVIDES TRANSIENT OVER VOLTAGE PROTECTION TO MOTOR CONTROLLER CIRCUIT	A1. FAILS TO OPERATE B1. INTERNAL PART FAILURE	POSSIBLE DAMAGE TO MOTOR CONTROLLER CIRCUITS	NONE. REQUIRES MULTIPLE FAILURES	3
			A2. PREMATURE OPERATION B2. INTERNAL PART FAILURE	NONE	NONE. REQUIRES MULTIPLE FAILURES	3
EIB200	BRIDGE ELECTRICAL INTERFACE BOARD	PROVIDES INTERFACE BETWEEN BRIDGE SPEED INDICATOR RCB BOARD	A1. NO OUPUT B1. INTERNAL PART FAILURE	NO BRIDGE SPEED INDICATION	NONE. REQUIRES MULTIPLE FAILURES	3
			A2. INCORRECT OUTPUT B2. INTERNAL PART FAILURE	INCORRECT BRIDGE SPEED INDICATION	NONE. REQUIRES MULTIPLE FAILURES	3
RCB	BRIDGE REGULATOR CONTROL BOARD	PROVIDES INTERFACE FOR KEYBOARD AND DISPLY, CENTRAL PROCESSING UNIT, POWER SUPPLY MONITORING AND ANALOG TO DIGITAL INTERFACE	A1. FAILS TO OPERATE B1. INTERNAL PART FAILURE	BRIDGE MOTOR CONTROLLER INOPERATIVE. E-STOP WILL HALT CRANE OPERATIONS	NONE. REQUIRES MULTIPLE FAILURES	3
			A2. INCORRECT OUTPUT B2. INTERNAL PART FAILURE	BRIDGE MOTOR CONTROLLER INOPERATIVE. E-STOP WILL HALT CRANE OPERATIONS	NONE. REQUIRES MULTIPLE FAILURES	3
NONE	BRIDGE RELAY BOARD	PROVIDES RELAY FUNCTIONS REQUIRED FOR EXTERNAL ELECTRICAL CONTROL	A1. FAILS TO OPERATE B1. INTERNAL PART FAILURE	IMPROPER BRIDGE CONTROL SEQUENCE. E-STOP WILL HALT CRANE	NONE. REQUIRES MULTIPLE FAILURES	3
			A2. INCORRECT OUTPUT B2. INTERNAL PART FAILURE	IMPROPER BRIDGE CONTROL SEQUENCE. E-STOP WILL HALT CRANE	NONE. RTEQUIRES MULTIPLE FAILURES	3

FAILURE MODES AND EFFECTS ANALYSIS (FMEA) WORKSHEET

System: 30 TON BRIDGE CRANE **Program:** **SPACE STATION** **Facility/Station Set:** SSPF

Subsystem: ELECTRICAL CONTROLS, HOIST

Drawing No.: 101A16061 **Sheet No.:** 1 TO 20 **Page:** 133 **of** **156** **Date:** 18 March, 2005

PMN: K61-2944 **Baseline:** 580.01 **Prepared by:** W. DiMeo, Boeing

FIND NO. PART NO.	PART NAME	PART FUNCTION	A. FAILURE MODE B. CAUSE C. FMN D. DETECTION METHOD E. CORRECTING ACTION F. TIME TO EFFECT G. TIMEFRAME	FAILURE EFFECT ON SYSTEM PERFORMANCE	FAILURE EFFECT ON FLIGHT HARDWARE AND/OR PERSONNEL SAFETY	CRIT CAT
NONE	BRIDGE DDA POWER SECTION	SUPPLIES CONTROLLER POWER TO BRIDGE MOTOR ARMATURE	A1. FAILS TO OPERATE B1. INTERNAL PART FAILURE	NO BRIDGE OPERATION	NONE. REQUIRES MULTIPLE FAILURES	3
			A2. INCORRECT OUTPUTD B2. INTERNAL PART FAILURE	IMPROPER BRIDGE MOVEMENT. E-STOP WILL HALT OPERATION	NONE. REQUIRES MULTIPLE FAILURES	3
RR3	START/RESET RELAY COIL	RESETS TROLLEY MOTOR CONTROLLER AND ENABLES AC3 RELAY CIRCUIT	A1. FAILS OPEN B1. INTERNAL PART FAILURE	INABILITY TO POWER UP CRANE	DELAY IN OPERATIONS	3
	N.O. CONTACTS IN SERIES WITH RELAY AC3	WHEN CLOSED ENABLES ACE (AUXILIARY RELAY CIRCUIT)	A1. FAILS OPEN B1. INTERNAL PART FAILURE	TROLLEY WILL NOT OPERATE	DELAY IN OPERATIONS	3
			A2. FAILS CLOSED B2. INTERNAL PART FAILURE	TROLLEY CONTROL RELAY AC3 CIRCUIT WILL BE CONTINUOSLY ENABLED	NONE. REQUIRES MULTIPLE FAILURES	3
RR3	N.O. CONTACTS IN SERIES WITH TROLLEY CONTROLLER RESET INPUT	WHEN CLOSED, RESET TROLLEY CONTROLLER	A1. FAILS OPEN B1. INTERNAL PART FAILURE	TROLLEY CONTROLLER WILL NOT RESET AND INITIALIZE FOR OPERATION	DELAY IN OPERATIONS	3
			A2. FAILS CLOSED B2. INTERNAL PART FAILURE	TROLLEY CONTROLLER CONTINUOSLY RESET. TROLLEY WILL NOT OPERATE	DELAY IN OPERATIONS	3

FAILURE MODES AND EFFECTS ANALYSIS (FMEA) WORKSHEET

System: 30 TON BRIDGE CRANE **Program:** SPACE STATION **Facility/Station Set:** SSPF

Subsystem: ELECTRICAL CONTROLS, HOIST

Drawing No.: 101A16061 **Sheet No.:** 1 TO 20 **Page:** 134 of 156 **Date:** 18 March, 2005

PMN: K61-2944 **Baseline:** 580.01 **Prepared by:** W. DiMeo, Boeing

FIND NO. PART NO.	PART NAME	PART FUNCTION	A. FAILURE MODE B. CAUSE C. FMN D. DETECTION METHOD E. CORRECTING ACTION F. TIME TO EFFECT G. TIMEFRAME	FAILURE EFFECT ON SYSTEM PERFORMANCE	FAILURE EFFECT ON FLIGHT HARDWARE AND/OR PERSONNEL SAFETY	CRIT CAT
CR1	N.O. CONTACTS IN SERIES WITH RR3	ENABLES TROLLEY CONTROL CIRCUITS	A1. FAILS OPEN B1. INTERNAL PART FAILURE	TROLLEY INOPERATIVE	DELAY IN OPERATIONS	3
			A2. FAILS CLOSED B2. INTERNAL PART FAILURE	NONE. E-STOP WILL HALT TROLLEY	NONE. REQUIRES MULTIPLE FAILURES	3
AC3	AUXILIARY RELAY COIL	WHEN ENERGIZED ENABLES EMERGENCY STOP RELAY, AC LINE CONTACTOR (N3) AND ENABLE RELAY (ER3)	A1. FAILS OPEN B1. INTERNAL PART FAILURE	TROLLEY WILL NOT OPERATE	DELAY IN OPERATIONS	3
	AUXILIARY RELAY N.O. CONTACTS IN SERIES WITH AC3 COIL	WHEN ENERGIZED PROVIDES LOCKING CURRENT PATH FOR AC3 COIL	A1. FAILS OPEN B1. INTERNAL PART FAILURE	TROLLEY WILL NOT OPERATE	DELAY IN OPERATIONS	3
			A2. FAILS CLOSED B2. INTERNAL PART FAILURE	AC3 RELAY CONTINUOSLY ENABLED AS LONG AS ESR3, FR3, AND CR2 ARE CLOSED	NONE. REQUIRES MULTIPLE FAILURES	3
AC3	N.O. CONTACTS IN SERIES ESR3 (EMERGENCY STOP RELAY)	WHEN CLOSED ENABLES EMERGENCY STOP RELAY	A1. FAILS OPEN B1. INTERNAL PART FAILURE	TROLLEY WILL NOT OPERATE	DELAY IN OPERATIONS	3
			A2. FAILS CLOSED B2. INTERNAL PART FAILURE	ESR3 RELAY WILL NOT OPEN IF FAULT OCCURS TO HALT TROLLEY MOVEMENT	DELAY IN OPERATIONS	3

FAILURE MODES AND EFFECTS ANALYSIS (FMEA) WORKSHEET

System: 30 TON BRIDGE CRANE **Program:** SPACE STATION **Facility/Station Set:** SSPF

Subsystem: ELECTRICAL CONTROLS, HOIST

Drawing No.: 101A16061 **Sheet No.:** 1 TO 20 **Page:** 135 **of** 156 **Date:** 18 March, 2005

PMN: K61-2944 **Baseline:** 580.01 **Prepared by:** W. DiMeo, Boeing

FIND NO. PART NO.	PART NAME	PART FUNCTION	A. FAILURE MODE B. CAUSE C. FMN D. DETECTION METHOD E. CORRECTING ACTION F. TIME TO EFFECT G. TIMEFRAME	FAILURE EFFECT ON SYSTEM PERFORMANCE	FAILURE EFFECT ON FLIGHT HARDWARE AND/OR PERSONNEL SAFETY	CRIT CAT
AC3	N.O. CONTACTS IN SERIES WITH N3 (A.C. LINE CONTACTOR)	WHEN CLOSED ENABLES A.C. LINE CONTACTOR (N3)	A1. FAILS OPEN B1. INTERNAL PART FAILURE	TROLLEY INOPERATIVE	DELAY IN OPERATIONS	3
			A2. FAILS CLOSED B2. INTERNAL PART FAILURE	A.C. CONTACTOR (N3) CONSTANTLY ENABLED	NONE. REQUIRES MULTIPLE FAILURES	3
	N.O. CONTACTS IN SERIES WITH ENABLE REALY	WHEN CLOSED ENABLES RELAY (ER3)	A1. FAILS OPEN B1. INTERNAL PART FAILURE	TROLLEY WILL NOT OPERATE	DELAY IN OPERATIONS	3
			B1. FAILS CLOSED B2. INTERNAL PARTS FAILURE	TROLLEY DRIVE CONSTANTLY ENABLED	NONE. REQUIRES MULTIPLE FAILURES	3
	N.O. CONTACTS IN SERIES WITH CRANE POWER ON LIGHT	WHEN CLOSED ENABLES CRANE POWER ON LIGHT	A1. FAILS OPEN B1. INTERNAL PART FAILURE	CRANE POWER ON LAMP WILL NOT ILLUMINATE WITH AC3 ENERGIZED	NONE. REQUIRES MULTIPLE FAILURES	3
			B1. FAILS CLOSED B2. INTERNAL PARTS FAILURE	CRANE POWER ON LAMP WILL BE CONSTINUOSLY ILLUMINATED	NONE. REQUIRES MULTIPLE FAILURES	3
TDR3	TIME DELAY RELAY COIL	PROVIDES TIME DELAY FOR ENERGIZATION OF A.C. LINE CONTACTOR (N3)	A1. FAILS OPEN B1. INTERNAL PART FAILURE	TROLLEY INOPERATIVE	DELAY IN OPERATIONS	3
	N.O. CONTACTS IN SERIES WITH N3	WHEN CLOSED ENABLES N3 CONTACTOR COIL CIRCUIT	A1. FAILS OPEN B1. INTERNAL PART FAILURE	TROLLEY INOPERATIVE	DELAY IN OPERATIONS	3
			A2. FAILS CLOSED B2. INTERNAL PART FAILURE	A.C. LINE CONTACTOR CONTINUOSLY ENERGIZED	NONE. REQUIRES MULTIPLE FAILURES	3

FAILURE MODES AND EFFECTS ANALYSIS (FMEA) WORKSHEET

System: 30 TON BRIDGE CRANE **Program:** SPACE STATION **Facility/Station Set:** SSPF

Subsystem: ELECTRICAL CONTROLS, HOIST

Drawing No.: 101A16061 **Sheet No.:** 1 TO 20 **Page:** 136 **of** 156 **Date:** 18 March, 2005

PMN: K61-2944 **Baseline:** 580.01 **Prepared by:** W. DiMeo, Boeing

FIND NO. PART NO.	PART NAME	PART FUNCTION	A. FAILURE MODE B. CAUSE C. FMN D. DETECTION METHOD E. CORRECTING ACTION F. TIME TO EFFECT G. TIMEFRAME	FAILURE EFFECT ON SYSTEM PERFORMANCE	FAILURE EFFECT ON FLIGHT HARDWARE AND/OR PERSONNEL SAFETY	CRIT CAT
ESR3	EMERGENCY STOP RELAY COIL	WHEN ENREGIZED ENABLES LOCKING CURRENT CIRCUIT FOR RELAY AC3 AND CLOSES CIRCUIT TO E-STOP INPUT CONTROLLER	A1. FAILS OPEN B1. INTERNAL PART FAILURE	TROLLEY WILL NOT OPERATE	DELAY IN OPERATIONS	3
	N.O. CONTACTS IN SERIES WITH AC3 RELAY	ENABLES AC3 RELAY COIL	A1. FAILS OPEN B1. INTERNAL PART FAILURE	TROLLEY WILL NOT OPERATE	DELAY IN OPERATIONS	3
			A2. FAILS CLOSED B2. INTERNAL PART FAILURE	AC3 (RELAY) CONTINUOSLY ENERGIZED	NONE. REQUIRES MULTIPLE FAILURES	3
	N.O. CONTACTS IN SERIES WITH TROLLEY CONTROLLER UPPER LIMIT E-STOP TERMINAL	WHEN OPEN CAUSES CONTROLLER TO HALT TROLLEY MOVEMENT	A1. FAILS OPEN B1. INTERNAL PART FAILURE	TROLLEY WILL NOT OPERATE	DELAY IN OPERATIONS	3
			A2. FAILS CLOSED B2. INTERNAL PART FAILURE	TROLLEY WILL NOT HALT WITH CLOSURE OF ESR3 RELAY, WHICH INDICATES ADNORMAL CONDITION	DELAY IN OPERATIONS	3
N3	A.C.LINE CONTACTOR COIL	WHEN OPEN CAUSES CONTROLLER TO HALT TROLLEY MOVEMENT	A1. FAILS OPEN B1. INTERNAL PART FAILURE	TROLLEY INOPERATIVE	DELAY IN OPERATIONS	3

FAILURE MODES AND EFFECTS ANALYSIS (FMEA) WORKSHEET

System: 30 TON BRIDGE CRANE **Program:** SPACE STATION **Facility/Station Set:** SSPF

Subsystem: ELECTRICAL CONTROLS, HOIST

Drawing No.: 101A16061 **Sheet No.:** 1 TO 20 **Page:** 137 **of** 156 **Date:** 18 March, 2005

PMN: K61-2944 **Baseline:** 580.01 **Prepared by:** W. DiMeo, Boeing

FIND NO. PART NO.	PART NAME	PART FUNCTION	A. FAILURE MODE B. CAUSE C. FMN D. DETECTION METHOD E. CORRECTING ACTION F. TIME TO EFFECT G. TIMEFRAME	FAILURE EFFECT ON SYSTEM PERFORMANCE	FAILURE EFFECT ON FLIGHT HARDWARE AND/OR PERSONNEL SAFETY	CRIT CAT
N3	N.O. CONTACTS (3) SETS IN SERIES WITH A.C. INPUT LINES TO TROLLEY CONTROLLER	WHEN CLOSED PROVIDES A PATHH FOR POWER TO TROLLEY CONTROLLER AND TROLLEY BRAKE SOLENOID	A1. FAILS OPEN (ANY ONE OR ALL SETS) B1. INTERNAL PART FAILURE	TROLLEY FAILS	DELAY IN OPERATIONS	3
			A2. FAILS CLOSED (ANY ONE OR ALL SETS) B2. INTERNAL PART FAILURE	CONTINUOS POWER TO TROLLEY CONTROLLER. POWER CAN BE REMOVED BY OPENING CIRCUIT BREAKER CKT.CB901	DELAY IN OPERATIONS	3
N3-AUX	N.C CONTACTS IN SERIES WITH UPPER LIMIT E-STOP	WHEN CLOSED PROVIDES +24VDC UPPER E-STOP INPUT OF BRIDGE CONTROLLER	A1. FAILS OPEN B1. INTERNAL PART FAILURE	TROLLEY INOPERATIVE. BRAKE SET	NONE. REQUIRES MULTIPLE FAILURES	3
			A2. FAILS CLOSED B2. INTERNAL PART FAILURE	TROLLEY CONTROLLER WILL NOT HALT TROLLEY FAULT WHEN TROLLEY FAULT DETECTED. E-STOP WILL	NONE . REQUIRES MULTIPLE FAILURES	3
	N.O. CONTACTS IN SERIES WITH ENABLE REALY	WHEN CLOSED ENABLE THE ENABLE RELAY COIL CIRCUIT	A1. FAILS OPEN B1. INTERNAL PART FAILURE	TROLLEY INOPERATIVE	DELAY IN OPERATIONS	3
			A2. FAILS CLOSED B2. INTERNAL PART FAILURE	NONE	NONE. REQUIRES MULTIPLE FAILURES	3

FAILURE MODES AND EFFECTS ANALYSIS (FMEA) WORKSHEET

System: 30 TON BRIDGE CRANE **Program:** SPACE STATION **Facility/Station Set:** SSPF

Subsystem: ELECTRICAL CONTROLS, HOIST

Drawing No.: 101A16061 **Sheet No.:** 1 TO 20 **Page:** 138 of 156 **Date:** 18 March, 2005

PMN: K61-2944 **Baseline:** 580.01 **Prepared by:** W. DiMeo, Boeing

FIND NO. PART NO.	PART NAME	PART FUNCTION	A. FAILURE MODE B. CAUSE C. FMN D. DETECTION METHOD E. CORRECTING ACTION F. TIME TO EFFECT G. TIMEFRAME	FAILURE EFFECT ON SYSTEM PERFORMANCE	FAILURE EFFECT ON FLIGHT HARDWARE AND/OR PERSONNEL SAFETY	CRIT CAT
N3-AUX	N.C CONTACTS IN SERIES WITH SHUNT TRIP COIL	ENABLES E-STOP SHUNT TRIP COIL CIRCUIT	A1. FAILS OPEN B1. INTERNAL PART FAILURE	UPPER HALF OF E-STOP (SHUNT TRIP CIRCUIT) WILL NOT FUNCTION. LOWER HALF OF E-STOP WILL OPERATE.	NONE. REQUIRES MULTIPLE FAILURES	3
			A2. FAILS CLOSED B2. INTERNAL PART FAILURE	NONE	DELAY IN OPERATIONS	3
ER3	ENABLE RELAY COIL	ENABLES TROLLEY MOTOR CONTROLLER AND AC3 CONTACTOR	A1. FAILS OPEN B1. INTERNAL PART FAILURE	TROLLEY WILL NOT OPERATE	DELAY IN OPERATIONS	3
	ENABLE REALYN.O. CONTACTS IN SERIES WITH ER3 RELAY COIL	PROVIDES PATH FOR LOCKING CURRENT FOR ER3 COIL	A1. FAILS OPEN B1. INTERNAL PART FAILURE	TROLLEY INOPERATIVEL	DELAY IN OPERATIONS	3
			A2. FAILS CLOSED B2. INTERNAL PART FAILURE	NONE	NONE. REQUIRES MULTIPLE FAILURES	3
	N.O. CONTACTS IN SERIES WITH TROLLEY CONTROLLER ENABLE INPUT	ENABLES TROLLEY CONTROLLER WHEN CLOSED	A1. FAILS OPEN B1. INTERNAL PART FAILURE	TROLLEY INOPERATIVE	DELAY IN OPERATIONS	3
			A2. FAILS CLOSED B2. INTERNAL PART FAILURE	TROLLEY CONTROLLER CONTINUOSLY ENABLED	DELAY IN OPERATIONS	3

FAILURE MODES AND EFFECTS ANALYSIS (FMEA) WORKSHEET

System: 30 TON BRIDGE CRANE **Program:** SPACE STATION **Facility/Station Set:** SSPF

Subsystem: ELECTRICAL CONTROLS, HOIST

Drawing No.: 101A16061 **Sheet No.:** 1 TO 20 **Page:** 139 **of** 156 **Date:** 18 March, 2005

PMN: K61-2944 **Baseline:** 580.01 **Prepared by:** W. DiMeo, Boeing

FIND NO. PART NO.	PART NAME	PART FUNCTION	A. FAILURE MODE B. CAUSE C. FMN D. DETECTION METHOD E. CORRECTING ACTION F. TIME TO EFFECT G. TIMEFRAME	FAILURE EFFECT ON SYSTEM PERFORMANCE	FAILURE EFFECT ON FLIGHT HARDWARE AND/OR PERSONNEL SAFETY	CRIT CAT
ER3	N.O. CONTACTS IN SERIES WITH N3 CONTACTOR	WHEN CLOSED ENABLES N3 COIL CIRCUIT. ENABLES N3 CONTACTOR	A1. FAILS OPEN B1. INTERNAL PART FAILURE	TROLLEY INOPERATIVE	NONE. REQUIRES MULTIPLE FAILURES	3
			A2. FAILS CLOSED B2. INTERNAL PART FAILURE	N3 (CONTACTOR) CONTINUOSLY ENABLED	DELAY IN OPERATIONS	3
BR3	BRAKE CONTACTOR COIL	WHEN ENREGIZED CAUSE TROLLEY BRAKE TO RELEASE AND INHIBITS START/ RESET RELAY WHILE BRAKES ARE ENERGIZED	A1. FAILS OPEN B1. INTERNAL PART FAILURE	TROLLEY BRAKES WILL NOT RELEASE AND RB3 (RESET/START RELAY) WILL NOT ENERGIZE	DELAY IN OPERATIONS	3
	N.O. OPEN CONTACTS IN SERIES WITH BC3 COIL	PROVIDES HOLDING CURRENT FOR BC3 COIL	A1. FAILS OPEN B1. INTERNAL PART FAILURE	TROLLEY INOPERATIVE	DELAY IN OPERATIONS	3
			A2. FAILS CLOSED B2. INTERNAL PART FAILURE	TROLLEY BRAKE CONTACTOR, BC4, WILL BE CONTINUOSLY ENERGIZED	NONE. REQUIRES MULTIPLE FAILURES	3

FAILURE MODES AND EFFECTS ANALYSIS (FMEA) WORKSHEET

System: 30 TON BRIDGE CRANE **Program:** SPACE STATION **Facility/Station Set:** SSPF

Subsystem: ELECTRICAL CONTROLS, HOIST

Drawing No.: 101A16061 **Sheet No.:** 1 TO 20 **Page:** 140 **of** 156 **Date:** 18 March, 2005

PMN: K61-2944 **Baseline:** 580.01 **Prepared by:** W. DiMeo, Boeing

FIND NO. PART NO.	PART NAME	PART FUNCTION	A. FAILURE MODE B. CAUSE C. FMN D. DETECTION METHOD E. CORRECTING ACTION F. TIME TO EFFECT G. TIMEFRAME	FAILURE EFFECT ON SYSTEM PERFORMANCE	FAILURE EFFECT ON FLIGHT HARDWARE AND/OR PERSONNEL SAFETY	CRIT CAT
BR3	N.O. OPEN CONTACTS IN SERIES WITH BOTH INPUT LINES OF TROLLEY BRAKE SOLENOID	PROVIDES PATH FOR 230VAC TO TROLLEY BRAKE SOLENOIDS 1 AND 2	A1. FAILS OPEN B1. INTERNAL PART FAILURE	TROLLEY WILL NOT OPERATE	DELAY IN OPERATIONS	3
			A2. FAILS CLOSED B2. INTERNAL PART FAILURE	NOTE. BOTH SETS OF CONTACTS WOULD HAVE TO FAIL CLOSED FOR CONTINUOUS BRAKE RELEASE TO OCCUR	NONE. REQUIRES MULTIPLE FAILURE	3
	N.C. CONTACTS IN SERIES RR3 (RESET/START RELAY) COIL	ENSURES TROLLEY CAN NOT BE RESTARTED/STARTED WHEN BRAKES ARE ENGAGED	A1. FAILS OPEN B1. INTERNAL PART FAILURE	TROLLEY INOPERATIVE	DELAY IN OPERATIONS	3
			A2. FAILS CLOSED B2. INTERNAL PART FAILURE	RESET/START RELAY CONTINUOUSLY ENABLED	NONE. REQUIRES MULTIPLE FAILURE	3
TFR	TROLLEY FORWARD RELAY COIL	WHEN ENRGIZED ENABLES TROLLEY CIRCUIT FOR FORWARD MOVEMENT	A1. FAILS OPEN B1. INTERNAL PART FAILURE	TROLLEY INOPERATIVEL IN FORWARD DIRECTION	DELAY IN OPERATIONS	3

FAILURE MODES AND EFFECTS ANALYSIS (FMEA) WORKSHEET

System: 30 TON BRIDGE CRANE **Program:** SPACE STATION **Facility/Station Set:** SSPF

Subsystem: ELECTRICAL CONTROLS, HOIST

Drawing No.: 101A16061 **Sheet No.:** 1 TO 20 **Page:** 141 **of** 156 **Date:** 18 March, 2005

PMN: K61-2944 **Baseline:** 580.01 **Prepared by:** W. DiMeo, Boeing

FIND NO. PART NO.	PART NAME	PART FUNCTION	A. FAILURE MODE B. CAUSE C. FMN D. DETECTION METHOD E. CORRECTING ACTION F. TIME TO EFFECT G. TIMEFRAME	FAILURE EFFECT ON SYSTEM PERFORMANCE	FAILURE EFFECT ON FLIGHT HARDWARE AND/OR PERSONNEL SAFETY	CRIT CAT
TFR	N.C CONTACTS IN SERIES WITH TROLLEY REVERSE REALY COIL	PREVENTS TROLLEY REVERSE FROM BEING SELECTED AT THE SAME TIME TROLLEY FORWARD IS SELECTED	A1. FAILS OPEN B1. INTERNAL PART FAILURE	TROLLEY INOPERATIVE IN REVERSE DIRECTION	DELAY IN OPERATIONS	3
			A2. FAILS CLOSED B2. INTERNAL PART FAILURE	IT WOULD BE POSSIBLE TO SELECT REVERSE AND FORWARD TROLLEY RELAYS AT THE SAME TIME. TROLLEY CONTROLLER SHOULD COME UP WITH A FAULT	NONE. REQUIRES MULTIPLE FAILURES	3
	N.C. CONTACTS IN SERIES WITH ENABLE RELAY ER3	WHEN CLOSED ENABLE TROLLEY CONTROLLER CIRCUIT	A1. FAILS OPEN B1. INTERNAL PART FAILURE	UNABLE TO ENABLE TROLLEY CONTROLLER. TROLLEY INOPERATIVE	DELAY IN OPERATIONS	3
			A2. FAILS CLOSED B2. INTERNAL PART FAILURE	TROLLEY ENABLE CONTROL REALY CONTINUOSLY ENERGIZED	DELAY IN OPERATIONS	3
	N.O. CONTACTS IN SERIES WITH TROLLEY BRAKE CONTACTOR	WHEN CLOSED ENABLES TROLLEY BRAKE CONTACTOR COIL CIRCUIT	A1. FAILS OPEN B1. INTERNAL PART FAILURE	BRAKE WILL NOT RELEASE AND TROLLEY WILL NOT OPERATE	DELAY IN OPERATIONS	3
			A2. FAILS CLOSED B2. INTERNAL PART FAILURE	TROLLEY BRAKE CIRCUIT CONTINUOSLY ENABLED	NOND. REQUIRES MULTIPLE FAILURES	3

FAILURE MODES AND EFFECTS ANALYSIS (FMEA) WORKSHEET

System: 30 TON BRIDGE CRANE **Program:** SPACE STATION **Facility/Station Set:** SSPF

Subsystem: ELECTRICAL CONTROLS, HOIST

Drawing No.: 101A16061 **Sheet No.:** 1 TO 20 **Page:** 142 of 156 **Date:** 18 March, 2005

PMN: K61-2944 **Baseline:** 580.01 **Prepared by:** W. DiMeo, Boeing

FIND NO. PART NO.	PART NAME	PART FUNCTION	A. FAILURE MODE B. CAUSE C. FMN D. DETECTION METHOD E. CORRECTING ACTION F. TIME TO EFFECT G. TIMEFRAME	FAILURE EFFECT ON SYSTEM PERFORMANCE	FAILURE EFFECT ON FLIGHT HARDWARE AND/OR PERSONNEL SAFETY	CRIT CAT
TFR	N.O CONTACTS IN SERIES WITH TROLLEY CONTROLLER DRIVE ON FORWARRD INPUT	COMMANDS CONTROLLER TO MOVE TROLLEY FORWARD	A1. FAILS OPEN B1. INTERNAL PART FAILURE	TROLLEY WILL NOT MOVE IN FORWARD DIRECTION	DELAY IN OPERATIONS	3
			A2. FAILS CLOSED B2. INTERNAL PART FAILURE	TROLLEY CONTROLLER WILL HAVE CONTINUOUS FORWARD COMMAND ON ITS INPUT	NONE. REQUIRES MULTIPLE FAILURES	3
	N.O CONTACTS IN SERIES WITH TROLLEY CONTROLLER DRIVE ON INPUT	COMMANDS CONTROLLER ON	A1. FAILS OPEN B1. INTERNAL PART FAILURE	TROLLEY WILL NOT MOVE IN FORWARD DIRECTION	DELAY IN OPERATIONS	3
			A2. FAILS CLOSED B2. INTERNAL PART FAILURE	TROLLEY CONTROLLER WILL HAVE CONTINUOUS DRIVE COMMAND ON ITS INPUT	NONE. REQUIRES MULTIPLE FAILURES	3
TRR	TROLLEY REVERSE RELAY COIL	WHEN ENERGIZED ENABLES TROLLEY CIRCUITS FOR REVERSE MOVEMENT	A1. FAILS OPEN B1. INTERNAL PART FAILURE	TROLLEY INOPERATIVE IN REVERSE DIRECTION	DELAY IN OPERATIONS	3

STOP ADD PAGES

FAILURE MODES AND EFFECTS ANALYSIS (FMEA) WORKSHEET

System: 30 TON BRIDGE CRANE **Program:** SPACE STATION **Facility/Station Set:** SSPF

Subsystem: ELECTRICAL CONTROLS, HOIST

Drawing No.: 101A16061 **Sheet No.:** 1 TO 20 **Page:** 143 of 156 **Date:** 18 March, 2005

PMN: K61-2944 **Baseline:** 580.01 **Prepared by:** W. DiMeo, Boeing

FIND NO. PART NO.	PART NAME	PART FUNCTION	A. FAILURE MODE B. CAUSE C. FMN D. DETECTION METHOD E. CORRECTING ACTION F. TIME TO EFFECT G. TIMEFRAME	FAILURE EFFECT ON SYSTEM PERFORMANCE	FAILURE EFFECT ON FLIGHT HARDWARE AND/OR PERSONNEL SAFETY	CRIT CAT
TRR	N.O. CONTACTS IN SERIES WITH TROLLEY FORWARD RELAY COIL ER3	PREVENTS TROLLEYFORWARD FROM BEING SELECTED AT THE SAME TIME TROLLEY REVERSE IS SELECTED	A1. FAILS OPEN B1. INTERNAL PART FAILURE	TROLLEY INOPERATIVE IN FORWARD DIRECTION	DELAY IN OPERATIONS	3
			A2. FAILS CLOSED B2. INTERNAL PART FAILURE	IT WOULD BE POSSIBLE TO SELECT REVERSE AND FORWARD TROLLEY RELAYS AT THE SAME TIME. TROLLEY CONTROLLER SHOULD COME UP WITH A FAULT	NONE. REQUIRES MULTIPLE FAILURES	3
TFR	N.C CONTACTS IN SERIES WITH ENABLE RELAY ER3	WHEN CLOSED ENABLES TROLLEY CONTROLLER CIRCUIT	A1. FAILS OPEN B1. INTERNAL PART FAILURE	UNABLE TO ENABLE TROLLEY CONTROLLER. TROLLEY INOPERATIVE	DELAY IN OPERATIONS	3
			A2. FAILS CLOSED B2. INTERNAL PART FAILURE	TROLLEY ENABLE CONTROL RELAY CONTINUOUSLY ENERGIZED	NONE. REQUIRES MULTIPLE FAILURES	3
	N.O. CONTACTS IN SERIES WITH TROLLEY BRAKE CONTACTOR	WHEN CLOSED ENABLES TROLLEY BRAKE CONTACTOR COIL CIRCUIT	A1. FAILS OPEN B1. INTERNAL PART FAILURE	TROLLEY BRAKE CIRCUIT CONTINUOUSLY ENABLED	DELAY IN OPERATIONS	3
			A2. FAILS CLOSED B2. INTERNAL PART FAILURE	TROLLEY BRAKE CIRCUIT CONTINUOSLY ENABLED	NONE. REQUIRES MULTIPLE FAILURES	3

FAILURE MODES AND EFFECTS ANALYSIS (FMEA) WORKSHEET

System: 30 TON BRIDGE CRANE **Program:** SPACE STATION **Facility/Station Set:** SSPF

Subsystem: ELECTRICAL CONTROLS, HOIST

Drawing No.: 101A16061 **Sheet No.:** 1 TO 20 **Page:** 144 of 156 **Date:** 18 March, 2005

PMN: K61-2944 **Baseline:** 580.01 **Prepared by:** W. DiMeo, Boeing

FIND NO. PART NO.	PART NAME	PART FUNCTION	A. FAILURE MODE B. CAUSE C. FMN D. DETECTION METHOD E. CORRECTING ACTION F. TIME TO EFFECT G. TIMEFRAME	FAILURE EFFECT ON SYSTEM PERFORMANCE	FAILURE EFFECT ON FLIGHT HARDWARE AND/OR PERSONNEL SAFETY	CRIT CAT
TFR	N.O. CONTACTS IN SERIES WITH TROLLEY CONTROLLER REVERSE INPUT	COMMANDS CONTROLLER TO MOVE TROLLEY REVERSE	A1. FAILS OPEN B1. INTERNAL PART FAILURE	TROLLEY INOPERATIVE IN REVERSE DIRECTION	DELAY IN OPERATIONS	3
			A2. FAILS CLOSED B2. INTERNAL PART FAILURE	TROLLEY CONTROLLER WILL HAVE CONTINUOS REVERSE COMMAND ON ITS INPUT	NONE. REQUIRES MULTIPLE FAILURES	3
	N.O CONTACTS IN SERIES WITH TROLLEY CONTROLLER DRIVE ON INPUT	COMMANDS CONTROLLER ON	A1. FAILS OPEN B1. INTERNAL PART FAILURE	TROLLEY WILL NOT MOVE IN REVERSEE DIRECTION	DELAY IN OPERATIONS	3
			A2. FAILS CLOSED B2. INTERNAL PART FAILURE	TROLLEY CONTROLLER WILL HAVE CONTINUOUS DRIVE COMMAND ON ITS INPUT	NONE. REQUIRES MULTIPLE FAILURES	3
SDR1	TROLLEY SLOWDOWN RELAY COIL	WHEN ENERGIZED ITS CONTACTS COMMAND CONTROLLER TO SLOWDOWN	A1. FAILS OPEN B1. INTERNAL PART FAILURE	TROLLEY WILL NOT SLOWDWON WHEN REVERSE LIMIT SWITCH IS ACTIVATED. E-STOP CAN BE USED TO STOP TROLLEY	NONE.REQUIRES MULTIPLE FAILURE	3
	N.O. CONTACTS IN SERIES WITH TROLLEY CONTROLLER SLOWDOWN INPUT LINE	THESE CONTACTS COMMAND CONTROLLER TO SLOWDOWN WHEN REVERSE LIMIT SWITCH IS ACTIVATED	A1. FAILS OPEN B1. INTERNAL PART FAILURE	TROLLEY WILL NOT SLOW DWON WHEN REVERSE LIMIT SWITCH IS ACTIVATED. E-STOP CAN BE USED TO STOP TROLLEY	NONE. REQUIRES MULTIPLE FAILURES	3
			A2. FAILS CLOSED B2. INTERNAL PART FAILURE	TROLLEY WILL ONLYRUN IN SLOWDOWN (SLOW SPEED DOWN)	DELAY IN OPERATIONS	3

FAILURE MODES AND EFFECTS ANALYSIS (FMEA) WORKSHEET

System: 30 TON BRIDGE CRANE **Program:** SPACE STATION **Facility/Station Set:** SSPF

Subsystem: ELECTRICAL CONTROLS, HOIST

Drawing No.: 101A16061 **Sheet No.:** 1 TO 20 **Page:** 145 of 156 **Date:** 18 March, 2005

PMN: K61-2944 **Baseline:** 580.01 **Prepared by:** W. DiMeo, Boeing

FIND NO. PART NO.	PART NAME	PART FUNCTION	A. FAILURE MODE B. CAUSE C. FMN D. DETECTION METHOD E. CORRECTING ACTION F. TIME TO EFFECT G. TIMEFRAME	FAILURE EFFECT ON SYSTEM PERFORMANCE	FAILURE EFFECT ON FLIGHT HARDWARE AND/OR PERSONNEL SAFETY	CRIT CAT
NONE	REVERSE SLOWDOWN LIMIT SWITCH	WHEN ACTIVATED INDICATING TROLLEY HAS REACHED REVERSE TRAVEL LIMIT IT ENERGIZES THE SLOWDOWN RELAY	A1. FAILS OPEN B1. INTERNAL PART FAILURE	TROLLEY WILL NOT SLOW DWON WHEN REVERSE LIMIT SWITCH IS ACTIVATED. E-STOP CAN BE USED TO STOP TROLLEY	NONE. REQUIRES MULTIPLE FAILURES	3
			A2. FAILS CLOSED B2. INTERNAL PART FAILURE	TROLLEY WILL ONLYRUN IN SLOWDOWN (SLOW SPEED DOWN)	DELAY IN OPERATIONS	3
SSR2	SPEED SELECT REALY COIL	WHEN ENERGIZED SELECTS TROLLEY SLOW SPEED	A1. FAILS OPEN B1. INTERNAL PART FAILURE	TROLLEY WILL NOT RUN IN SLOW SPEED	DELAY IN OPERATIONS	3
	N.O. CONTACTS IN SERIES WITH TROLLEY CONTROLLER SLOW SPEED INPUT LINE	WHEN CLOSED SELECTS TROLLEY SLOW SPEED	A1. FAILS OPEN B1. INTERNAL PART FAILURE	TROLLEY WILL NOT RUN IN SLOW SPEED	DELAY IN OPERATIONS	3
			A2. FAILS CLOSED B2. INTERNAL PART FAILURE	TROLLEY WILL ONLY RUN IN SLOW SPEED	DELAY IN OPERATIONS	3
	N.O. CONTACTS IN SERIES WITH TERMINAL 2 OF EIB BOARD OF MOTOR A CONTROLLER	WHEN CLOSED BYPASSES 20K RESISTOR TO PROVIDE CORRECT LEVEL TO HOIST SPEED INDICATOR	A1. FAILS OPEN B1. INTERNAL PART FAILURE	TROLLEY ISPEED INDICATOR WILL NOT INDICATE CORRECT SPEED	NONE . REQUIRES MULTIPLE FAILIRES	3
			A2. FAILS CLOSED B2. INTERNAL PART FAILURE	TROLLEY SPEED INDICATOR WILL NOT INDICATE CORRECT SPEED	NONE. REQUIRES MULTIPLE FAILURES	3

FAILURE MODES AND EFFECTS ANALYSIS (FMEA) WORKSHEET

System: 30 TON BRIDGE CRANE **Program:** SPACE STATION **Facility/Station Set:** SSPF

Subsystem: ELECTRICAL CONTROLS, HOIST

Drawing No.: 101A16061 **Sheet No.:** 1 TO 20 **Page:** 146 of 156 **Date:** 18 March, 2005

PMN: K61-2944 **Baseline:** 580.01 **Prepared by:** W. DiMeo, Boeing

FIND NO. PART NO.	PART NAME	PART FUNCTION	A. FAILURE MODE B. CAUSE C. FMN D. DETECTION METHOD E. CORRECTING ACTION F. TIME TO EFFECT G. TIMEFRAME	FAILURE EFFECT ON SYSTEM PERFORMANCE	FAILURE EFFECT ON FLIGHT HARDWARE AND/OR PERSONNEL SAFETY	CRIT CAT
NONE	SPEED SELECT SWITCH	N.O. OPEN SWITCH, WHEN CLOSED SELECTS SLOW SPEED	A1. FAILS OPEN B1. INTERNAL PART FAILURE	TROLLEY WILL NOT RUN IN SLOW SPEED	DELAY IN OPERATIONS	3
			A2. FAILS CLOSED B2. INTERNAL PART FAILURE	TROLLET WILL ONLY RUN IN SLOW SPEED	DELAI IN OPERATIONS	3
NONE	REVERSE EOT LIMIT SWITCH	WHEN OPENS (INDICATING REVERSE LIMIT REACHED) DISABLES TROLLEY REVERSE CIRCUITS	A1. FAILS OPEN B1. INTERNAL PART FAILURE	TROLLEY WILL NOT OPERATE IN REVERSE MODE	DELAY IN OPERATIONS	3
			A2. FAILS CLOSED B2. INTERNAL PART FAILURE	TROLLET WILL NOT STOP WHEN REVERSE LIMIT REACHED. E-STOP WILL STOP TROLLEY	NONE. REQUIRES MULTIPLE FAILURES	3
TF	TROLLEY MASTER SWITCH	WHEN CLOSED ENABLES TROLLEY FORWARD REALY COIL	A1. FAILS OPEN B1. INTERNAL PART FAILURE	TROLLEY WILL NOT OPERATE IN FORWARD DIRECTION	NONE. REQUIRES MULTIPLE FAILURES	3
			A2. FAILS CLOSED B2. INTERNAL PART FAILURE	TROLLEY CONTINUOSLY ENABLED IN FORWARD DIRECTION. E-STOP OR ANTI-COLLISION SWITCH WILL STOP TROLLEY TRAVEL	DELAY IN OPERATIONS	3

FAILURE MODES AND EFFECTS ANALYSIS (FMEA) WORKSHEET

System: 30 TON BRIDGE CRANE **Program:** SPACE STATION **Facility/Station Set:** SSPF

Subsystem: ELECTRICAL CONTROLS, HOIST

Drawing No.: 101A16061 **Sheet No.:** 1 TO 20 **Page:** 147 of 1567 **Date:** 18 March, 2005

PMN: K61-2944 **Baseline:** 580.01 **Prepared by:** W. DiMeo, Boeing

FIND NO. PART NO.	PART NAME	PART FUNCTION	A. FAILURE MODE B. CAUSE C. FMN D. DETECTION METHOD E. CORRECTING ACTION F. TIME TO EFFECT G. TIMEFRAME	FAILURE EFFECT ON SYSTEM PERFORMANCE	FAILURE EFFECT ON FLIGHT HARDWARE AND/OR PERSONNEL SAFETY	CRIT CAT
TF	TROLLEY MASTER SWITCH	WHEN CLOSED ENABLES TROLLEY REVERSE REALY COIL	A1. FAILS OPEN B1. INTERNAL PART FAILURE	TROLLEY WILL NOT OPERATE IN REVERSE DIRECTION	DELAY IN OPERATIONS	3
			A2. FAILS CLOSED B2. INTERNAL PART FAILURE	TROLLEY CONTINUOSLY ENABLED IN REVERSE DIRECTION. E-STOP OR REVERSE LIMIT SWITCH WILL STOP TROLLEY TRAVEL	NONE. REQUIRES MULTIPLE FAILURES	3
TJM	TROLLEY MOTOR CONTROLLER JUNCTION MODULE	THROUGH EXTERNAL TROLLEY CONTROL LOGIC (RELAYS) CONTROLS POWER TO TROLLEY MOTOR BY MONITORING TOURQUE, SPEED, LOAD, AND BRAKE CONDITIONS	A1. NO OUTPUT B1. INTERNAL PART FAILURE	TROLLEY MOTOR WILL NOT OPERATE	DELAY IN OPERATIONS	3
			A2. INCORRECT OUTPUT (INCORRECT LEVEL) B2. INTERNAL PART FAILURE	TROLLEY MOTOR WILL PERFORM INCORRECT FUNCTIOMS. E-STOP WILL HALT OPERATION. FAILS SCREEN B	NONE. REQUIRES MULTIPLE FAILURES	3
FR4	FAULT RELAY 3 COIL	WHEN NOT ENERGIZED BY TROLLEY CONTROLLER RELAYS AC3 AND N3 (LINE CONTACTOR) ARE DISABLED	A1. FAILS OPEN B1. INTERNAL PART FAILURE	TROLLEY WILL NOT OPERATE	DELAY IN OPERATIONS	3

FAILURE MODES AND EFFECTS ANALYSIS (FMEA) WORKSHEET

System: 30 TON BRIDGE CRANE **Program:** SPACE STATION **Facility/Station Set:** SSPF

Subsystem: ELECTRICAL CONTROLS, HOIST

Drawing No.: 101A16061 **Sheet No.:** 1 TO 20 **Page:** 148 **of** 156 **Date:** 18 March, 2005

PMN: K61-2944 **Baseline:** 580.01 **Prepared by:** W. DiMeo, Boeing

FIND NO. PART NO.	PART NAME	PART FUNCTION	A. FAILURE MODE B. CAUSE C. FMN D. DETECTION METHOD E. CORRECTING ACTION F. TIME TO EFFECT G. TIMEFRAME	FAILURE EFFECT ON SYSTEM PERFORMANCE	FAILURE EFFECT ON FLIGHT HARDWARE AND/OR PERSONNEL SAFETY	CRIT CAT
FRA	N.O. CONTACTS IN SERIES WITH AC3 AUXILIARY RELAY COIL	WHEN CLOSED ENABLES AC3'S COIL	A1. FAILS OPEN B1. INTERNAL PART FAILURE	TROLLEY IWILL NOT OPERATE	DELAY IN OPERATIONS	3
			A2. FAILS CLOSED B2. INTERNAL PART FAILURE	A FAUILT AS SEEN BY MOTOR CONTROLLER WILL NOT OPEN AC3'S CIRCUIT BUT N3 (LINE CONTACTOR) WILL OPEN	DELAY IN OPERATIONS	3
FR3	N.O CONTACTS IN SERIES WITH N3 CONTACTOR COIL	WHEN CLOSED ENABLES N3 COIL	A1. FAILS OPEN B1. INTERNAL PART FAILURE	TROLLEY WILL NOT OPERATE	DELAY IN OPERATIONS	3
			A2. FAILS CLOSED B2. INTERNAL PART FAILURE	A FAUILT AS SEEN BY MOTOR CONTROLLER WILL NOT OPEN N3'S CIRCUIT BUT AC3 WILL OPEN	NONE. REQUIRES MULTIPLE FAILURES	3
D901	COIL SUPPRESSION DIODE ACROSS FR3 COIL	REDUCES BACK EMF ACROSS FR3 COIL FOR INCREASED LIFE OF RELAY AND PREVENTION OF INTERMITTENT OPERATION	A1. FAILS OPEN B1. INTERNAL PART FAILURE	REDUCES LIFE/POSSIBLE INTERMITTENT OPERATIO OF FR3 RELAY	NONE. REQUIRES MULTIPLE FAILURES	3
			A2. FAILS SHORTED B2. INTERNAL PART FAILURE	TROLLEY WILL NOT OPERATE	DELAY IN OPERATIONS	3

FAILURE MODES AND EFFECTS ANALYSIS (FMEA) WORKSHEET

System: 30 TON BRIDGE CRANE **Program:** SPACE STATION **Facility/Station Set:** SSPF

Subsystem: ELECTRICAL CONTROLS, HOIST

Drawing No.: 101A16061 **Sheet No.:** 1 TO 20 **Page:** 149 of 156 **Date:** 18 March, 2005

PMN: K61-2944 **Baseline:** 580.01 **Prepared by:** W. DiMeo, Boeing

FIND NO. PART NO.	PART NAME	PART FUNCTION	A. FAILURE MODE B. CAUSE C. FMN D. DETECTION METHOD E. CORRECTING ACTION F. TIME TO EFFECT G. TIMEFRAME	FAILURE EFFECT ON SYSTEM PERFORMANCE	FAILURE EFFECT ON FLIGHT HARDWARE AND/OR PERSONNEL SAFETY	CRIT CAT
FU901, FU902, FU903	LINE FUSES (3) ONE FOR EACH A.C. INPUT LINE	PROTECT CIRCUIT FROM OVERLOAD	A1. OPEN PREMATURELY B1. INTERNAL PART FAILURE	TROLLEY WILL NOT OPERATE	DELAY IN OPERATIONS	3
			A2. FAILS TO OPEN B2. INTERNAL PART FAILURE	CIRCUIT BREAKER UPSTREAM WILL OPEN	DELAY IN OPERATIONS	3
NONE	STEP DOWN TRANSFORMER FOR TROLLEY MOTOR CONTROLLER	STEPS DOWN INPUT VOLTAGE FROM 230VAC TO 120VAC FOR MOTOR CONTROLLER	A1. FAILS OPEN B1. INTERNAL PART FAILURE	TROLLEY MOTOR WILL NOT OPERATE	DELAY IN OPERATIONS	3
			A2. FAILS TO OPERATE B2. INTERNAL PART FAILURE	INPUT FUSES TO PRIMARY CIRCUIT WILL OPEN. TROLLEY WILL NOT OPERATE	DELAY IN OPERATIONS	3
FU905, FU906	FUSES IN SERIES WITH INPUT LINES TO PRIMARY OF STEP-DOWN TRANSFORMER	PROTECT TROLLEY MOTOR CONTROLLER/TRANSFORMER FROM SHORT CIRCUIT	A1. OPEN PREMATURELY B1. INTERNAL PART FAILURE	TROLLEY INOPERATIVE	DELAY IN OPERATIONS	3
			A2. FAILS TO OPEN B2. INTERNAL PART FAILURE	UPSTREAM BREAKER WILL OPEN IF EITHER FUSE FAIL TO OPERATE	DELAY IN OPERATIONS	3
MOV901	METAL OXIDE VARISTOR	PROTECTS TROLLEY CONTROLLER FROM SURGE CURRENT	A1. OPERATES PREMATURELY B1. INTERNAL PART FAILURE	NONE	NONE. REQUIRES MULTIPLE FAILURES	3
			A2. FAILS TO OPERATE B2. INTERNAL PART FAILURE	POSSIBLE DAMAGE TO TROLLEY CONTROLLER	DELAY IN OPERATIONS	3

FAILURE MODES AND EFFECTS ANALYSIS (FMEA) WORKSHEET

System: 30 TON BRIDGE CRANE **Program:** SPACE STATION **Facility/Station Set:** SSPF

Subsystem: ELECTRICAL CONTROLS, HOIST

Drawing No.: 101A16061 **Sheet No.:** 1 TO 20 **Page:** 150 of 156 **Date:** 18 March, 2005

PMN: K61-2944 **Baseline:** 580.01 **Prepared by:** W. DiMeo, Boeing

FIND NO. PART NO.	PART NAME	PART FUNCTION	A. FAILURE MODE B. CAUSE C. FMN D. DETECTION METHOD E. CORRECTING ACTION F. TIME TO EFFECT G. TIMEFRAME	FAILURE EFFECT ON SYSTEM PERFORMANCE	FAILURE EFFECT ON FLIGHT HARDWARE AND/OR PERSONNEL SAFETY	CRIT CAT
FU907	FUSE IN LINE WITH SECONDARY OUTPUT OF STEP-DOWN TRANSFORMER	PROTECTS STEO-DOWN TRANSFORMERS FROM DOWN STREAM OVERLOAD	A1. OPEN PREMATURELY B1. INTERNAL PART FAILURE	TROLLEY INOPERATIVE	DELAY IN OPERATIONS	3
			A2. FAILS TO OPERATE B2. INTERNAL PART FAILURE	DOWNSTREAM BREAKER WILL OPEN CIRCUIT FOR PROTECTION	DELAY IN OPERATIONS	3
NONE	TROLLEY SPEED CONTROL	POTENTIOMETER USED FOR SELECTING TROLLEY SPEED	A1. FAILS OPEN B1. INTERNAL PART FAILURE	TROLLEY WILL NOT OPERATE	DELAY IN OPERATIONS	3
			A2. FAILS CLOSED B2. INTERNAL PART FAILURE	TROLLEY WILL ONLY RUN AT ONE SPEED WITHIN RANGE SELECTED	DELAY IN OPERATIONS	3
FU904	FUSE IN LINE WITH TROLLEY MOTOR ARMATURE	PROTECTS POWER SECTION OF CONTROLLER FROM OVERLOAD CONDITION	A1. OPEN PREMATURELY B1. INTERNAL PART FAILURE	TROLLEY INOPERATIVE	DELAY IN OPERATIONS	3
			A2. FAILS TO OPERATE B2. INTERNAL PART FAILURE	DOWNSTREAM BREAKER WILL OPEN CIRCUIT FOR PROTECTION	DELAY IN OPERATIONS	3

FAILURE MODES AND EFFECTS ANALYSIS (FMEA) WORKSHEET

System: 30 TON BRIDGE CRANE **Program:** SPACE STATION **Facility/Station Set:** SSPF

Subsystem: ELECTRICAL CONTROLS, HOIST

Drawing No.: 101A16061 **Sheet No.:** 1 TO 20 **Page:** 151 of 156 **Date:** 18 March, 2005

PMN: K61-2944 **Baseline:** 580.01 **Prepared by:** W. DiMeo, Boeing

FIND NO. PART NO.	PART NAME	PART FUNCTION	A. FAILURE MODE B. CAUSE C. FMN D. DETECTION METHOD E. CORRECTING ACTION F. TIME TO EFFECT G. TIMEFRAME	FAILURE EFFECT ON SYSTEM PERFORMANCE	FAILURE EFFECT ON FLIGHT HARDWARE AND/OR PERSONNEL SAFETY	CRIT CAT
FU908, FU909	FUSE IN LINE WITH A.C INPUT TO TROLLEY BRAKE SOLENOIDS	PROTECTS TROLLEY BRAKE RECTIFIER/CONTROLLER FROM ELECTRICAL DAMAGE	A1. OPEN PREMATURELY B1. INTERNAL PART FAILURE	TROLLEY IBRAKE WILL NOT RELEASE. TROLLEY INOPERATIVE	DELAY IN OPERATIONS	3
			A2. FAILS TO OPERATE B2. INTERNAL PART FAILURE	POSSIBLE DAMAGE TO TROLLEY SOLENOID. TROLLEY BRAKE WILL NOT RELEASE	DELAY IN OPERATIONS	3
NONE	TROLLEY DC BRAKE COIL	WHEN ENERGIZED CAUSES TROLLEY BRAKE TO RELEASE	A1. FAILS OPEN B1. INTERNAL PART FAILURE	TROLLEY BRAKE WILL NOT RELEASE	DELAY IN OPERATIONS	3
	TROLLEY LINE ENCODER	ENCODES TROLLEY MOTOR ARMATURE LOCATION INDICATION INTO DIGITAL FORMAT FOR MOTOR CONTROLLER	A1. INCORRECT OUTPUT B1. INTERNAL PART FAILURE	INCORRECT TROLLEY POSITION INFORMATION TO MOTOR CONTROLLER	NONE. REQUIRES MULTIPLE FAILURES	3
			A2. NO OUTPUT B2. INTERNAL PART FAILURE	NO TROLLEY POSITION INFORMATION	NONE. REQUIRES MULTIPLE FAILURES	3

FAILURE MODES AND EFFECTS ANALYSIS (FMEA) WORKSHEET

System: 30 TON BRIDGE CRANE **Program:** SPACE STATION **Facility/Station Set:** SSPF

Subsystem: ELECTRICAL CONTROLS, HOIST

Drawing No.: 101A16061 **Sheet No.:** 1 TO 20 **Page:** 152 **of** 156 **Date:** 18 March, 2005

PMN: K61-2944 **Baseline:** 580.01 **Prepared by:** W. DiMeo, Boeing

FIND NO. PART NO.	PART NAME	PART FUNCTION	A. FAILURE MODE B. CAUSE C. FMN D. DETECTION METHOD E. CORRECTING ACTION F. TIME TO EFFECT G. TIMEFRAME	FAILURE EFFECT ON SYSTEM PERFORMANCE	FAILURE EFFECT ON FLIGHT HARDWARE AND/OR PERSONNEL SAFETY	CRIT CAT
MOM1001	TROLLEY MOTOR OVERTEMP MODULE3	MONITORS TROLLEY MOTOR TEMPERATURE	A1. NO/LOW OUTPUT B1. INTERNAL PART FAILURE	MOTOR OVERTEMP WILL NOT RESULT IN MOTOR OVERTEMP INDICATION. MOTOR OVERTEMP WARNING WILL	NONE. REQUIRES MULTIPLE FAILURES	3
			A2. WRONG OUTPUT B2. INTERNAL PART FAILURE	MOTOR OVERTEMP WILL NOT RESULT IN MOTOR OVER-TEMP INDICATION. MOTOR OVERTEMP WARNING WILL	NONE. REQUIRES MULTIPLE FAILURES	3
MOWM	TROLLEY OVERTEMP WARNING MODULE	MONITORS TROLLEY MOTOR TEMPERATURE	A1. NO/LOW OUTPUT B1. INTERNAL PART FAILURE	MOTOR OVERTEMP WARNING WILL NOT RESULT IN MOTOR OVERTEMP INDICATION. MOTOR OVERTEMP WARNING WILL	NONE. REQUIRES MULTIPLE FAILURES	3
			A2. WRONG OUTPUT B2. INTERNAL PART FAILURE	MOTOR OVERTEMP WARNING WILL NOT RESULT IN MOTOR OVERTEMP INDICATION. MOTOR OVERTEMP WARNING WILL	NONE. REQUIRES MULTIPLE FAILURES	3
NONE	OVERTEMP SENSOR	THERMISTOR WHICH INPUTS VOLTAGE BASED ON MOTOR TEMPERATURE TO MOTOR OVERTEMP MODULE	A1. NO/LOW OUTPUT B1. INTERNAL PART FAILURE	MOTOR OVERTEMP WILL NOT RESULT IN MOTOR OVERTEMP INDICATION. MOTOR OVERTEMP WARNING WILL	DELAY IN OPERATIONS	3
			A2. WRONG OUTPUT B2. INTERNAL PART FAILURE	MOTOR OVERTEMP WARNING WILL NOT RESULT IN MOTOR OVERTEMP INDICATION. MOTOR OVERTEMP WARNING WILL	NONE. REQUIRES MULTIPLE FAILURES	3

FAILURE MODES AND EFFECTS ANALYSIS (FMEA) WORKSHEET

System: 30 TON BRIDGE CRANE **Program:** SPACE STATION **Facility/Station Set:** SSPF

Subsystem: ELECTRICAL CONTROLS, HOIST

Drawing No.: 101A16061 **Sheet No.:** 1 TO 20 **Page:** 153 of 156 **Date:** 18 March, 2005

PMN: K61-2944 **Baseline:** 580.01 **Prepared by:** W. DiMeo, Boeing

FIND NO. PART NO.	PART NAME	PART FUNCTION	A. FAILURE MODE B. CAUSE C. FMN D. DETECTION METHOD E. CORRECTING ACTION F. TIME TO EFFECT G. TIMEFRAME	FAILURE EFFECT ON SYSTEM PERFORMANCE	FAILURE EFFECT ON FLIGHT HARDWARE AND/OR PERSONNEL SAFETY	CRIT CAT
NONE	OVERTEMP WARNING SENSOR	THERMISTOR WHICH INPUTS VOLTAGE BASED ON MOTOR TEMPERATURE TO MOTOR OVERTEMP WARNING MODULE	A1. NO/LOW OUTPUT B1. INTERNAL PART FAILURE	MOTOR OVERTEMP WILL NOT RESULT IN MOTOR OVERTEMP WARNING INDICATION. MOTOR OVERTEMP WARNING WILL	NONE. REQUIRES MULTIPLE FAILURES	3
			A2. WRONG OUTPUT B2. INTERNAL PART FAILURE	NO MOTOR OVERTEMP WARNING LIGHT. OVERTEMP WILL LIGHT	NONE. REQUIRES MULTIPLE FAILURES	3
MOR3	MOTOR OVERTEMP RELAY COIL	WHEN ENERGIZED BY MOTOR OVERTEMP MODULE, CAUSES EMERGENCY STOP RELAY TO HALT TROLLEY	A1. FAILS OPEN B1. INTERNAL PART FAILURE	OVERHEAT WILL NOT RESULT IN HALTING TROLLEY OPERATION	NONE. REQUIRES MULTIPLE FAILURES	3
	N.O. CONTACTS IN SERIES WITH MOTOR OVERHEAT WARNING	WHEN CLOSED ILLUMINATES MOTOR OVERHEAT WARNING LAMP	A1. FAILS OPEN B1. INTERNAL PART FAILURE	MOTOR OVERHEAT WARNING LAMP WILL NOT ILLUMINATE WITH OVERTEMP WARNING CONDITION	NOE. REQUIRES MULTIPLE FAILURES	3
			A2. FAILS CLOSED B2. INTERNAL PART FAILURE	MOTOR OVERHEAT WARNING LAMP WILL BE CONTINUOSLY ILLUMINATED	DEALY IN OPERATIONS	3
	N.C CONTACTS IN SERIES ESR3 RELAY COIL	WHEN OPEN CAUSES TROLLEY TO HALT DUE TO OPENING OF ESR3 CIRCUIT	A1. FAILS OPEN B1. INTERNAL PART FAILURE	EMERGENCY STOP RELAY ESR3 WILL DE-ENERGIZE CAUSING TROLLEY TO HALT	DELAY IN OPERATIONS	3

FAILURE MODES AND EFFECTS ANALYSIS (FMEA) WORKSHEET

System: 30 TON BRIDGE CRANE **Program:** SPACE STATION **Facility/Station Set:** SSPF

Subsystem: ELECTRICAL CONTROLS, HOIST

Drawing No.: 101A16061 **Sheet No.:** 1 TO 20 **Page:** 154 of 156 **Date:** 18 March, 2005

PMN: K61-2944 **Baseline:** 580.01 **Prepared by:** W. DiMeo, Boeing

FIND NO. PART NO.	PART NAME	PART FUNCTION	A. FAILURE MODE B. CAUSE C. FMN D. DETECTION METHOD E. CORRECTING ACTION F. TIME TO EFFECT G. TIMEFRAME	FAILURE EFFECT ON SYSTEM PERFORMANCE	FAILURE EFFECT ON FLIGHT HARDWARE AND/OR PERSONNEL SAFETY	CRIT CAT
MOWR3	MOTOR OVERTEMP WARNING RELAY COIL	WHEN ENERGIZED ILLUMINATES MOTOR TEMPERATURE WARNING LAMP	A1. FAILS OPEN B1. INTERNAL PART FAILURE	MOTOR TEMPERATURE WARNING WILL NOT BE INDICATED	DELAY IN OPERATIONS	3
	N.O. CONTACTS IN SERIES WITH MOTOR TEMPERATURE WARNING LAMP	WHEN CLOSED ILLUMINATES MOTOR TEMPERATURE WARNING LAMP	A1. FAILS OPEN B1. INTERNAL PART FAILURE	MOTOR TEMPERATURE WARNING WILL NOT BE INDICATED	DELAY IN OPERATIONS	3
			A2. FAILS CLOSED B2. INTERNAL PART FAILURE	MOTOR TEMPERATURE WARNING LAMP CONTINUOSLY ILLUMINATED	DEALY IN OPERATIONS	3
NONE	DOOR SWITCH	WHEN CLOSED CAUSES ENCLOSURE FLOURESCENT LAMP TO ILLUMINATE FOR MAINTENANCE ON MOTOR CONTROLLER	A1. FAILS OPEN B1. INTERNAL PART FAILURE	MAINTENACE PERSONNEL WILL HAVE DIFFICULTY SEEING INSIDE OF CABINET	NONE	3
			A2. FAILS CLOSED B2. INTERNAL PART FAILURE	FLOURESCENT LAMP CONTINUOSLY ILLUMINATED	NONE	3
	FLOURESCENT LAMP INSIDE MOTOR CONTROLLER CABINET	PROVIDES LIGHT FOR MAINTENANCE PERSONNEL	A1. FAILS OPEN B1. INTERNAL PART FAILURE	MAINTENACE PERSONNEL WILL HAVE DIFFICULTY SEEING INSIDE OF CABINET	NONE	3
LTR3	LAMP TEST RELAY 3 COIL	WHEN ENERGIZED ITS CONTACTS ILLUMINATE ALL LAMPS FOR TEST	A1. FAILS OPEN B1. INTERNAL PART FAILURE	LAMP TEST WILL NOT FUNCTION	DELAY IN OPERATIONS	3

FAILURE MODES AND EFFECTS ANALYSIS (FMEA) WORKSHEET

System: 30 TON BRIDGE CRANE **Program:** SPACE STATION **Facility/Station Set:** SSPF

Subsystem: ELECTRICAL CONTROLS, HOIST

Drawing No.: 101A16061 **Sheet No.:** 1 TO 20 **Page:** 155 of 156 **Date:** 18 March, 2005

PMN: K61-2944 **Baseline:** 580.01 **Prepared by:** W. DiMeo, Boeing

FIND NO. PART NO.	PART NAME	PART FUNCTION	A. FAILURE MODE B. CAUSE C. FMN D. DETECTION METHOD E. CORRECTING ACTION F. TIME TO EFFECT G. TIMEFRAME	FAILURE EFFECT ON SYSTEM PERFORMANCE	FAILURE EFFECT ON FLIGHT HARDWARE AND/OR PERSONNEL SAFETY	CRIT CAT
LTR3	N.O. CONTACTS IN SERIES WITH TROLLEY CONTROLLER INDICATOR LAMPS	WHEN CLOSED TETS ITS ASSOCIATED LAMP	A1. FAILS OPEN B1. INTERNAL PART FAILURE	ASSOCIATED LAMP WILL NOT PASS TEST	DELAY IN OPERATIONS	3
			A2. FAILS CLOSED B2. INTERNAL PART FAILURE	ASSOCIATED LAMP CONTINUOUSLY ILLUMUNATED	DELAY IN OPERATIONS	3
NONE	MOTOR TEMPERATURE WARNING LAMP	WHEN ILLUMINATED INDICATES MOTOR OVERTEMP WARNING	A1. FAILS OPEN B1. INTERNAL PART FAILURE	MOTOR TEMPERATURE WARNING WILL NOT BE INDICATED, MOTOR OVERHEAT EVENTUALLY WILL	NONE. REQUIRES MULTIPLE FAILURES	3
	MOTOR OVERHEAT WARNING LAMP	WHEN ILLUMINATED INDICATES MOTOR OVERHEAT WARNING	A1. FAILS OPEN B1. INTERNAL PART FAILURE	MOTOR TEMPERATURE OVERHEAT WARNING WILL NOT BE INDICATED, MOTOR OVERHEAT EVENTUALLY WILL	NONE. REQUIRES MULTIPLE FAILURES	3
	TROLLEY BRAKE SOLENOID NO 1N.C CONTACTS IN SERIES ESR3 RELAY COIL	WHEN ENERGIZED DISENGAGES BRAKE	A1. FAILS OPEN B1. INTERNAL PART FAILURE	ETROLLEY BRAKE NO 1 WILL NOT DISENGAGE	DELAY IN OPERATIONS	3

FAILURE MODES AND EFFECTS ANALYSIS (FMEA) WORKSHEET

System: 30 TON BRIDGE CRANE **Program:** SPACE STATION **Facility/Station Set:** SSPF

Subsystem: ELECTRICAL CONTROLS, HOIST

Drawing No.: 101A16061 **Sheet No.:** 1 TO 20 **Page:** 156 **of** 156 **Date:** 18 March, 2005

PMN: K61-2944 **Baseline:** 580.01 **Prepared by:** W. DiMeo, Boeing

FIND NO. PART NO.	PART NAME	PART FUNCTION	A. FAILURE MODE B. CAUSE C. FMN D. DETECTION METHOD E. CORRECTING ACTION F. TIME TO EFFECT G. TIMEFRAME	FAILURE EFFECT ON SYSTEM PERFORMANCE	FAILURE EFFECT ON FLIGHT HARDWARE AND/OR PERSONNEL SAFETY	CRIT CAT
DIU	TROLLEY DIGITAL INTERFACE UNIT	PROVIDES SIGNAL CONDITIONING FOR TROLLEY POSITION INDICATOR AND PROVIDES DATA COMMUNICATIONS BETWEEN LINE ENCODER AND REGULATOR CONTROL BOARD	A1. NO OUTPUT B1. INTERNAL PART FAILURE	TROLLEY MOTOR CONTROLLER WILL NOT KNOW TROLLEY POSITION	NONE. REQUIRES MULTIPLE FAILURES	3
			A2. INCORRECT OUTPUT B2. INTERNAL PART FAILURE	ERRONEOUS TROLLEY POSITION DATA TO REGULATOR CONTROL BOARD. E-STOP CAN HALT CRANE OPERATIONS	NONE. REQUIRES MULTIPLE FAILURES	3
IPB	TROLLEY INTERFACE POWER BOARD	PROVIDES POWER TO OTHER CONTROLLER COMPONENTS AND TO SHUNT FIELD	A1. NO OUTPUT B1. INTERNAL PART FAILURE	TROLLEY INOPERATIVE	NONE. REQUIRES MULTIPLE FAILURES	3
			A2. INCORRECT OUTPUT B2. INTERNAL PART FAILURE	INCONSISTENT TROLLEY OPERATION	NONE. REQUIRES MULTIPLE FAILURES	3
SOB	TROLLEY SNUBBER OVERVOLTAGE BOARD	PROVIDES TRANSIENT OVER VOLTAGE PROTECTION TO MOTOR CONTROLLER CIRCUIT	A1. FAILS TO OPERATE B1. INTERNAL PART FAILURE	POSSIBLE DAMAGE TO MOTOR CONTROLLER CIRCUITS. E-STOP STILL OPERATIVE	NONE. REQUIRES MULTIPLE FAILURES	3
			A2. PREMATURE OPERATION B2. INTERNAL PART FAILURE	TROLLEY INOPERATIVE. E-STOP STILL OPERATIVE	NONE. REQUIRES MULTIPLE FAILURES	3

FAILURE MODES AND EFFECTS ANALYSIS (FMEA) WORKSHEET

System: 30 TON BRIDGE CRANE **Program:** SPACE STATION **Facility/Station Set:** SSPF
Subsystem: ELECTRICAL CONTROLS, HOIST
Drawing No.: 101A16061 **Sheet No.:** 1 TO 20 **Page:** 157 **of** 156 **Date:** 18 March, 2005
PMN: K61-2944 **Baseline:** 580.01 **Prepared by:** W. DiMeo, Boeing

FIND NO. PART NO.	PART NAME	PART FUNCTION	A. FAILURE MODE B. CAUSE C. FMN D. DETECTION METHOD E. CORRECTING ACTION F. TIME TO EFFECT G. TIMEFRAME	FAILURE EFFECT ON SYSTEM PERFORMANCE	FAILURE EFFECT ON FLIGHT HARDWARE AND/OR PERSONNEL SAFETY	CRIT CAT
EIB200	TROLLEY ELECTRICAL INTERFACE BOARD	PROVIDES INTERFACE BETWEEN BRIDGE SPEED INDICATOR RCB BOARD	A1. NO OUPUT B1. INTERNAL PART FAILURE	NO TROLLEY SPEED INDICATION	NONE. REQUIRES MULTIPLE FAILURES	3
			A2. INCORRECT OUTPUT B2. INTERNAL PART FAILURE	INCORRECT TROLLEY SPEED INDICATION	NONE. REQUIRES MULTIPLE FAILURES	3
RCB	TROLLEY REGULATOR CONTROL BOARD	PROVIDES INTERFACE FOR KEYBOARD AND DISPLY, CENTRAL PROCESSING UNIT, POWER SUPPLY MONITORING AND ANALOG TO DIGITAL INTERFACE	A1. FAILS TO OPERATE B1. INTERNAL PART FAILURE	TROLLEY MOTOR CONTROLLER INOPERATIVE. E-STOP WILL HALT CRANE OPERATIONS	NONE. REQUIRES MULTIPLE FAILURES	3
			A2. INCORRECT OUTPUT B2. INTERNAL PART FAILURE	TROLLEY MOTOR CONTROLLER INOPERATIVE. E-STOP WILL HALT CRANE OPERATIONS	NONE. REQUIRES MULTIPLE FAILURES	3
NONE	TROLLEY RELAY BOARD	PROVIDES RELAY FUNCTIONS REQUIRED FOR EXTERNAL ELECTRICAL CONTROL SYSTEM	A1. FAILS TO OPERATE B1. INTERNAL PART FAILURE	IMPROPER TROLLEY CONTROL SEQUENCE. E-STOP WILL HALT CRANE	NONE. REQUIRES MULTIPLE FAILURES	3
			A2. INCORRECT OUTPUT B2. INTERNAL PART FAILURE	IMPROPER TROLLEY CONTROL SEQUENCE. E-STOP WILL HALT CRANE	NONE. RTEQUIRES MULTIPLE FAILURES	3
	TROLLEY DDA POWER SECTION	SUPPLIES CONTROLLER POWER TO TROLLEY MOTOR ARMATURE	A1. FAILS TO OPERATE B1. INTERNAL PART FAILURE	NO TROLLEY OPERATION	NONE. REQUIRES MULTIPLE FAILURES	3
			A2. INCORRECT OUTPUTD B2. INTERNAL PART FAILURE	IMPROPER TROLLEY MOVEMENT. E-STOP WILL HALT OPERATION	NONE. REQUIRES MULTIPLE FAILURES	3

RELAY BOARD INPUT AND OUTPUT

SIGNAL NAME	COMM.	I/O	SIGNAL FUNCTION	FAILS HIGH	FAILS LOW	WORST CASE EFFECT ON SYSTEM	COMMENTS
+VDC	11	O	DC VOLTAGE TO SPEED POT	INCORRECT SPEED REFERENCE TO CONTROLLER	INCORRECT SPEED REFERENCE TO CONTROLLER	MASTER CONTROL OR E-STOPS WILL HALT OPERATION	
COMMON	20	O	DC VOLTAGE TO SPEED POT	INCORRECT SPEED REFERENCE TO CONTROLLER	INCORRECT SPEED REFERENCE TO CONTROLLER	MASTER CONTROL OR E-STOPS WILL HALT OPERATION	
-VDC	37	O	NOT USED	NOT USED	NOT USED	NOT USED	
115 VAC	1	I	AC POWER TO RELAY BOAERD	FUSE WILL BLOW	DRIVE WILL NOT FUNCTION	CRANE INOPERATIVE	
115 VAC	2	I	AC POWER TO RELAY BOAERD	FUSE WILL BLOW	DRIVE WILL NOT FUNCTION	CRANE INOPERATIVE	

HOIST JUNCTION MODULE INPUTS AND OUTPUTS

SIGNAL NAME	COMM.	I/O	SIGNAL FUNCTION	FAILS HIGH	FAILS LOW	WORST CASE EFFECT ON SYSTEM	COMMENTS
DRIVE RESET	1	I		ALL SIGNALS ON THROUGH WITH THERE ARE NO COMPONENTS	THIS BOARD PASS, NO MODIFICATION ACTIVE ON THIS BOARD		
RAISE	11	I					
BRAKE ACK NO.3	4	I					
SLOW SPEED	6	I					
LOWER	10	I					
UPPER LIMIT E-STOP	7	I	SEE RELAY BOARD AND RCB BOARD			SEE RELAY BOARD AND RCB BOARD	
DRIVE ENABLE	8	I					
DRIVE ON	9	I					
LOAD FLOAT	2	I					
LOAD SHARE	5	I					
+24 VOLTS D.C.	26	I					
FAULT RELAY	13	O					
FAULT RELAY	25	O					
BRAKE CONTROL RELAY	18	O					
ZERO SPEED REALY	23	O					

HOIST LINE ENCODER INPUTS AND OUTPUTS

SIGNAL NAME	COMM.	I/O	SIGNAL FUNCTION	FAILS HIGH	FAILS LOW	WORST CASE EFFECT ON SYSTEM	COMMENTS
A	X54/1	O	INCREMENTAL PULSES FROM LINE ENCODER FOR GENERATION OF HOIST MOTOR SHAFT ROTATIONAL POSITION AND SPEED STATUS	ENCODER FAULT	ENCODER FAULT	CRANE INOPERATIVE	
A NOT	X54/6	O					
B	X54/3	O					
B NOT	X54/8	O					
EARTH	X54/5	O					
NP	X54/2	O					
NP NOT	X54/7	O					
DGND	X54/4	O					
VS	X54/9	O					

HOIST RECTIFIER CONTROLLER INPUTS AND OUTPUTS

SIGNAL NAME	COMM.	I/O	SIGNAL FUNCTION	FAILS HIGH	FAILS LOW	WORST CASE EFFECT ON SYSTEM	COMMENTS
BC1	116	I	ONE SIDE OF A.C. INPUT VOLTAGE TO HOIST BRAKE RECTIFIER. WHEN PRESENT CAUSES BRAKES TO RELEASE	(CLOSED CONTACTS) CONTINUOUS POWER TO ONE SIDE OF HOIST BRAKE RECTIFIER. FOR BRAKES TO RELEASE POWER IS NEEDED TO BOTH INPUT LINES	(OPEN CONTACTS) BRAKE WILL NOT RELEASE	CRANE INOPERATIVE	
BC1	117	I	ONE SIDE OF A.C. INPUT VOLTAGE TO HOIST BRAKE RECTIFIER. WHEN PRESENT CAUSES BRAKES TO RELEASE	(CLOSED CONTACTS) CONTINUOUS POWER TO ONE SIDE OF HOIST BRAKE RECTIFIER. FOR BRAKES TO RELEASE POWER IS NEEDED TO BOTH INPUT LINES	(OPEN CONTACTS) BRAKE WILL NOT RELEASE	CRANE INOPERATIVE	

RCB BOARD INPUTS AND OUTPUTS

SIGNAL NAME	COMM.	I/O	SIGNAL FUNCTION	FAILS HIGH	FAILS LOW	WORST CASE EFFECT ON SYSTEM	COMMENTS
AGND	5/15	I	NOT USED	NOT USED	NOT USED	NOT USED	
TACH INPUT	X5/14	I	NOT USED	NOT USED	NOT USED	NOT USED	
EARTH GROUND	X5/13	I	PROVIDE COMMON GROUND	OTHER POINTS ARE GROUNDED	OTHER POINTS ARE GROUNDED	NONE	
+GP3-INB	X5/12	I	FLOAT POSITION/SPEED REFERENCE	INCORRECT SPEED REFERENCE TO CONTROLLER	INCORRECT SPEED REFERENCE TO CONTROLLER	MASTER CONTROL OR E-STOPS WILL HALT OPERATIONS	
-GP3-INA	X5/11	I	HOIST SPEED POT.	INCORRECT SPEED REFERENCE TO CONTROLLER	INCORRECT SPEED REFERENCE TO CONTROLLER	MASTER CONTROL OR E-STOPS WILL HALT OPERATIONS	
EARTH GROUND	X5/10	I	PROVIDE COMMON GROUND WITH OTHER CONT. COMP.	OTHER POINTS ARE GROUNDED	OTHER POINTS ARE GROUNDED	NONE	
+GP2-INB	X5/9	I	HOIST NORMAL SPEED REFERENCE	INCORRECT SPEED REFERENCE TO CONTROLLER	INCORRECT SPEED REFERENCE TO CONTROLLER	MASTER CONTROL OR E-STOPS WILL HALT OPERATIONS	
-GP2-INA	X5/8	I	FLOAT SPEED REFERENCE	INCORRECT SPEED REFERENCE TO CONTROLLER	INCORRECT SPEED REFERENCE TO CONTROLLER	MASTER CONTROL OR E-STOPS WILL HALT OPERATIONS	
+GP1-INB	5/7	I	NOT USED	NOT USED	NOT USED	NOT USED	
-GP1-INA	5/6	I	NOT USED	NOT USED	NOT USED	NOT USED	
EARTH GROUND	X5/5	I	PROVIDE COMMON GROUND	OTHER POINTS ARE GROUNDED	OTHER POINTS ARE GROUNDED	NONE	
-10VDC	5/4	I	NOT USED	NOT USED	NOT USED	NOT USED	
A GROUND	X5/3	I	PROVIDE COMMON GROUND	OTHER POINTS ARE GROUNDED	OTHER POINTS ARE GROUNDED	NONE	
+10 VDC	X5/2	I	NOT USED	NOT USED	NOT USED	NOT USED	
EARTH GROUND	X5/1	I	PROVIDE COMMON GROUND	OTHER POINTS ARE GROUNDED	OTHER POINTS ARE GROUNDED	NONE	
DATA 0 TO 15 BITS FROM DIU	X3/A1 9 TO A26		CONTROL SYSTEM DATA BUS BITS. PROVIDE DATA TO/FROM OTHER CONTROLLER COMPONENTS	(ANY ONE BIT) CHECK SUMM ERROR	(ANY ONE BIT) CHECK SUMM ERROR	CRANE INOPERATIVE	

RCB BOARD INPUTS AND OUTPUTS CONT.

SIGNAL NAME	COMM.	I/O	SIGNAL FUNCTION	FAILS HIGH	FAILS LOW	WORST CASE EFFECT ON SYSTEM	COMMENTS
RSVOK	X3/A2 8	O	NOT USED	NOT USED	NOT USED	NOT USED	
INTPER/NOT	X3/C1 5	I	NOT USED	NOT USED	NOT USED	NOT USED	
ENCOK	X3/A2 7	I	ENCODER OK, INDICATES THE ENCODER OUTPUT IS OK	CONSTANT ENCODER OK, EVEN IF ENCODER FAILS	CONSTANT ENCODER OK, EVEN IF ENCODER FAILS	DRIVE WILL FAULT WITH IMPROPER ENCODER OUTPUT DUE TO MISMATCH OF POSITION AND SPEED. E-STOP CAN HALT OPERATION	
GROUND	X3/A2 9	I	PROVIDES COMMON GROUND POINT FOR RCB	(OPEN) POSSIBLE INTERMITTENT NUISANCE FAULTS	NONE	DRIVE WILL FAULT. CRANE INOPERATIVE	
RSTRCB/NOT	X3/C1 4	I	RESET THE RCB BOARD	SRT BOARD WILL NOT RESET CONTROLLER INOPERATIVE	CONSTANT RST FALSE RESETS, CONTROLLER INOPERATIVE	CRANE INOPERATIVE	
NEBSC/NOT	X3/C1 2	I	SELECT OPTION CARD MEMORY BANK FOR READ OR WRITE OPERATIONRESET THE RCB BOARD	RCB PROCESSOR WILL FAUKT	RCB PROCESSOR WILL FAULT	CRANE INOPERATIVE	
CSKRCB/NOT	X3/A1 2	I	INDICATES CHECKSUM ERROR HAS OCCURRED	RCB PROCESSOR WILL FAULT	RCB PROCESSOR WILL FAULT CDUE TO INVALID DATA	CRANE INOPERATIVE	
CSSMRCB	X3/C1 3	I	NOT USED	NOT USED	NOT USED	NOT USED	
RDYRCB	X3/A1 5	I	INDICATES RCB BOARD IS READY	CONTINUOUS RCB READY SIGNAL	NO RCB READY SIGNAL	CRANE INOPERATIVE	IF RCB INDICATES CONTINUOUS READY MULTIPLE FAILURES ARE REQUIRED FOR ANY MAL-EFFECT
ACKRCB/NOT	X3/A1 8	I	ACKNOWLEDGES INTERRUPT BEING SERVICED TO INTERRUPTING DEVICE	CONSTANT INTERRUPT ACK SIGNAL. PROCESSOR FAULT SHOULD OCCUR	NO KNOWLEDGE TO INTERRUPTING DEVICE SHOULD OCCUR IN A TIME-OUT	CRANE INOPERATIVE	

RCB BOARD INPUTS AND OUTPUTS CONT.

SIGNAL NAME	COMM.	I/O	SIGNAL FUNCTION	FAILS HIGH	FAILS LOW	WORST CASE EFFECT ON SYSTEM	COMMENTS
OSIRQ	X3/C17	O	NOT USED	NOT USED	NOT USED	NOT USED	
WAH/NOT	X3/C11	I	SELECTS MEMORY ADDRESSING HIGH ORDER BITS FOR WRITE OPERATION	DATA WRITTEN INTO WRONG LOCATION. SOFTWARE WILL FAULT	DATA WRITTEN INTO WRONG LOCATION. SOFTWARE WILL FAULT	CRANE INOPERATIVE	
WAL/NOT	X3/A11	I	SELECTS MEMORY ADDRESSING HIGH ORDER BITS FOR WRITE OPERATION	DATA WRITTEN INTO WRONG LOCATION. SOFTWARE WILL FAULT	DATA WRITTEN INTO WRONG LOCATION. SOFTWARE WILL FAULT	CRANE INOPERATIVE	
SIGNAL NAME	**COMM.**	**I/O**	**SIGNAL FUNCTION**	**FAILS HIGH**	**FAILS LOW**	**WORST CASE EFFECT ON SYSTEM**	**COMMENTS**
ADDRESS BITS A1 TO A8	X3/A2 -A9	I	CONTROL SYSTEM ADDRESS BUS BITS. SELECT LOACTION FROM WHICH TO RETRIEVE DATA FOR CONTROLLER OPERATIONS	(ANY ONE) INCORRECT DATA FETCHED/STORED. DATA FETCHED. SOFTWARE TABLES MATCHED TO INCORRECT DATA SHOULD RESULT IN CONTROLLER FAULT. IF NOT E-STOP WILL HALT OPERATION	(ANY ONE) INCORRECT DATA FETCHED/STORED. DATA FETCHED. SOFTWARE TABLES MATCHED TO INCORRECT DATA SHOULD RESULT IN CONTROLLER FAULT. IF NOT E-STOP WILL HALT OPERATION	E-STOP ACTIVATION TO HALT CRANE INOPERATIVE	
T2CLK	X3/10C		NOT USED	NOT USED	NOT USED	NOT USED	
LC/NOT	X3/27C		NOT USED	NOT USED	NOT USED	NOT USED	
CSPER/NOT	X3/14A		NOT USED	NOT USED	NOT USED	NOT USED	
CSDIU/NOT	X3/29C		WHEN ACTIVE TURNS ON 3 STATE DEVICE ON DIU OPTION BOARD BUS	REQUESTED OUTPUT FROM 3 STATE FLIP FLOP, NOT AVAILABLE CONTROLLER FAULT	CONSTANT OUTPUT AVAILABLE FROM 3 STATE DEVICE. POSSIBLE DEGREGATION OF SIGNAL LEVELS ON BUS	CRANE INOPERATIVE DUE TO CONTROLLER FAULT	
INTDIU/NOT	X3/C16		NOT USED	NOT USED	NOT USED	NOT USED	
HSKTEMPN	X2/2		HEAT SINK THERMOSTAT RETURN	(OPENS) INACCURATE HEAT SINK THERMOSTAT INPUT	(CLOSED) IN ACCURATE HEAT SINK THERMOSTAT INPUT	CRANE WILL BE INTERMITTENTLY INOPERATIVE WITH CONTROLLER FAULTS	

RCB BOARD INPUTS AND OUTPUTS CONT.

SIGNAL NAME	COMM.	I/O	SIGNAL FUNCTION	FAILS HIGH	FAILS LOW	WORST CASE EFFECT ON SYSTEM	COMMENTS
PHFAULT	X2/3	I	WHEN ACTIVE INDICATES A PHASE FAULT HAS OCCURRED	CONSTANT PHASE FAULT CONDITION	NO PHASE FAULT INDICATION, OTHER CONTROLLER CIRCUITS WILL INTERRUPT OPERATIONS	CRANE INOPERATIVE	
LOW VOLTS	X2/3	I	INDICATES A LOW VOLTAGE CONDITION HAS BEEN DETECTED	NO INDICATION OF LOW VOLTAGE CONDITION BUT POSSIBLE INTERMITTENT DRIVE FAULTS	CONSTANT LOW VOLTAGE INDICATION AND DRIVE FAULT	CRANE INOPERATIVE	
BCARM	X2/6		THYRISTOR BANK CONTROL	INCORRECT THYRISTOR FIRING. CONTROLLER FAULT	NO THYRISTOR FIRING. CONTROLLER FAULT	CRANE INOPERATIVE	
SHFTARM	X2/9	O	THYRISTOR ROTATION FIRING TIMING CONTROL	INCORRECT THYRISTOR FIRING. CONTROLLER FAULT	NO THYRISTOR FIRING. CONTROLLER FAULT	CRANE INOPERATIVE	
DSHFTARM	X2/10	O	THYRISTOR ROTATION FIRING TIMING CONTROL	INCORRECT THYRISTOR FIRING. CONTROLLER FAULT	NO THYRISTOR FIRING. CONTROLLER FAULT	CRANE INOPERATIVE	
IGNON	X2/11	O	THYRISTOR PULSE TRANSFORMER POWER ON/GATE ENABLE (ARMATURE)	ARMATURE THYRISTOR ENABLED CONTINUOUSLY, CONTROLLER FAULT	CONTROLLER FAULT	CRANE INOPERATIVE	
FIELDIGN	X2/12	O	THYRISTOR PULSE TRANSFORMER POWER ON/GATE ENABLE (FIELD)	FIELD THYRISTOR ENABLED CONTINUOUSLY, CONTROLLER FAULT	CONTROLLER FAULT	CRANE INOPERATIVE	
HSKTEMPP	X2/13		HEAT SINK THERMOSTAT	(OPENS) INACCURATE HEAT SINK THERMOSTAT INPUT	NONE	CRANE INOPERATIVE DUE TO HEATSINK OVERTEMPAND LOSS OF THYRISRTOR OUTPUT	
RELOUT	X2/14	O	NOT USED	NOT USED	NOT USED	NOT USED	
IFIPB	X4/2	I	FIELD CURRENT FEEDBACK	INCORRECT CURRENT FEEDBACK LEVEL. FIELD CURRENT WILL BE INCORRECTLY REDUCED	INCORRECT CURRENT FEEDBACK LEVEL. FIELD CURRENT WILL BE INCORRECTLY REDUCED	CRANE SPEED MAY VARY BUT NOT OUTSIDE PRE-ESTABLISHED SOFTWARE LIMITS SET FOR EACH MODE	CURRENT CAN VARY BUT NOT OUTSIDE PRESET SOFTAWRE LIMITS. CONTROLLER ALSO HAS SPEED LOOP

RCB BOARD INPUTS AND OUTPUTS CONT.

SIGNAL NAME	COMM.	I/O	SIGNAL FUNCTION	FAILS HIGH	FAILS LOW	WORST CASE EFFECT ON SYSTEM	COMMENTS
UAIPBIFIPB	X4/3	I	ARMATURE VOLTAGE FEEDBACK	INCORRECT CURRENT FEEDBACK LEVEL. FIELD CURRENT WILL BE INCORRECTLY REDUCED	INCORRECT CURRENT FEEDBACK LEVEL. FIELD CURRENT WILL BE INCORRECTLY REDUCED	CRANE SPEED MAY VARY BUT NOT OUTSIDE PRE-ESTABLISHED SOFTWARE LIMITS SET FOR EACH MODE	CURRENT CAN VARY BUT NOT OUTSIDE PRESET SOFTAWRE LIMITS. CONTROLLER ALSO HAS SPEED LOOP
IPOIPB	X4/4	I	FIELD CURRENT FEEDBACK SIGNAL COMMON	INCORRECT CURRENT FEEDBACK LEVEL. FIELD CURRENT WILL BE INCORRECTLY REDUCED	INCORRECT CURRENT FEEDBACK LEVEL. FIELD CURRENT WILL BE INCORRECTLY REDUCED	CRANE SPEED MAY VARY BUT NOT OUTSIDE PRE-ESTABLISHED SOFTWARE LIMITS SET FOR EACH MODE	CURRENT CAN VARY BUT NOT OUTSIDE PRESET SOFTAWRE LIMITS. CONTROLLER ALSO HAS SPEED LOOP
IAIPB	X4/5	I	ARMATURE VOLTAGE FEEDBACK SIGNAL COMMON	INCORRECT CURRENT FEEDBACK LEVEL. FIELD CURRENT WILL BE INCORRECTLY REDUCED	INCORRECT CURRENT FEEDBACK LEVEL. FIELD CURRENT WILL BE INCORRECTLY REDUCED	CRANE SPEED MAY VARY BUT NOT OUTSIDE PRE-ESTABLISHED SOFTWARE LIMITS SET FOR EACH MODE	CURRENT CAN VARY BUT NOT OUTSIDE PRESET SOFTAWRE LIMITS. CONTROLLER ALSO HAS SPEED LOOP
DFIPB	X4/7	I	FIELD PHASE SYNCHRONIZATION SIGNAL (LINE)	INCORRECT FIELD PHASE TO AMU	INCORRECT FIELD PHASE TO AMU	CONTROLLER FAULT	
IAOIPB	X4/8	I	ARMATURE CURENT FEEDBACK COMMON	INCORRECT CURRENT FEEDBACK LEVEL. FIELD CURRENT WILL BE INCORRECTLY REDUCED	INCORRECT CURRENT FEEDBACK LEVEL. FIELD CURRENT WILL BE INCORRECTLY REDUCED	CRANE SPEED MAY VARY BUT NOT OUTSIDE PRE-ESTABLISHED SOFTWARE LIMITS SET FOR EACH MODE	CURRENT CAN VARY BUT NOT OUTSIDE PRESET SOFTAWRE LIMITS. CONTROLLER ALSO HAS SPEED LOOP
SYN1IPB	X4/9	I	ARMATURE SYNCHRONIZATION LINE)	INCORRECT ARMATURE PHASE TO AMU	INCORRECT ARAMTURE PHASE TO AMU	CONTROLLER FAULT	
DFOIPB	X4/10	I	FIELD PHASE SYNCHRONIZATION SIGNAL (COMMON)	INCORRECT FIELD PHASE TO AMU	INCORRECT FIELD PHASE TO AMU	CONTROLLER FAULT	

RCB BOARD INPUTS AND OUTPUTS CONT.

SIGNAL NAME	COMM.	I/O	SIGNAL FUNCTION	FAILS HIGH	FAILS LOW	WORST CASE EFFECT ON SYSTEM	COMMENTS
-12V	X4/12	I	SUPPLIES -12VDC TO RCB BOARD	CONTROLLER INOPERATIVE	CONTROLLER INOPERATIVE	CRANE INOPERATIVE	
+12V	X4/13	I	SUPPLIES +12VDC TO RCB BOARD	CONTROLLER INOPERATIVE	CONTROLLER INOPERATIVE	CRANE INOPERATIVE	
AGND	X4/14	I	PROVIDES COMMON GROUND	(OPENS) POSSIBLE INTERMITTENT CONTROLLER FAULTS	NONE	CRANE INOPERATIVE OR IMTERMITTENTLY OPERATIVE	
DRIVE REST	X7/1	I	RESET ANY DRIVE FAULTS AND CLEARS THE ERROR STACK	DRIVE STUCK IN RESET	DRIVE WON'T RESET	CRANE INOPERATIVE	
FLOAT	X7/2	I	PUTS DRIVE IN FLOAT MODE	DRIVE STUCK IN FLOAT MODE	NO FLOAT MODE	CRANE INOPERATIVE	
LOAD SHARE RED.	X7/3	I	REDUCED THE DRIVE CURRENT (SOFTWARE LIMITS)	CONSTANT CURRENT REDUCE CONDITION. CONTROLLER SPEED AAND CURRENT MONITORING SYSTEMS WILL CAUSE FAULT	NO CURRRRENT REDUCE CONDITION WHEN REQUIRED. CONTROLLER SPEED AND CURRENT MONITORING SYSTEMS WILL CAUSE FAULT	CRANE INOPERATIVE	
BRAKE ACK	X7/4	I	WHEN ACTIVE INDICATES THE BRAKE IS RELEASED	FALSE INDICARION THAT BRAKE IS RELEASED	FALSE INDICATION OF BRAKE BEING SET. IF THIS SIGNAL DOES NOT CHANGE STATE AFTER EACH OPERATION, CONTROLLER WILL FAULT VIA SOFTWARE	CRANE INOPERATIVE	
LOAD SHARE	X7/5	I	PUTS DRIVE IN LOAD SHARE	DRIVE STUCK IN L.S. MODE	NO LOAD SHARE	CRANE INOPERATIVE	
SLOW SPEED	X7/6	I	PUTS DRIVE IN SLOW MODE	DRIVE STUCK IN SLOW MODE	NO SLOW MODE SHARE	CRANE INOPERATIVE	
DRIVE ENABLE	X7/8	I	MONITORS THE POWER CONTACTOR STATE. INPUT IS USED TO DETERMINE IF THE THYRISTOR BRIDGE CAN BE OR SHOULD BE ACTIVE	CONTINUOUS DRIVE ENABLE	DRIVE INOPERATIVE	CRANE INOPERATIVE	
DRIVE ON	X7/9	I	REQUESTS START SEQUENCE OF CONTROL/MOTOR	DRIVE INOPERATIVE	CONTINUOUS DRIVE ON	CRANE INOPERATIVE	

RCB BOARD INPUTS AND OUTPUTS CONT.

SIGNAL NAME	COMM.	I/O	SIGNAL FUNCTION	FAILS HIGH	FAILS LOW	WORST CASE EFFECT ON SYSTEM	COMMENTS
LOWER	X7/10	I	PUTS DRIVE IN LOWER MODE	CONTINUOUS LOWER MODE	NO LOWER MODE	CRANE INOPERATIVE	
NOT USED	X7/12	O	NOT USED	NOT USED	NOT USED	NOT USED	
BRAKE CONTROL	X7/13	O	WHEN ACTIVE BRAKE RELEASE IS COMMANDED	CONSTANT BRAKE RELEASE BRAKE COMMAND. SOFTWARE WILL CAUSE FAULT DUE TO LACK OF BRAKE ACK INPUT AND BRAKE SET	NO BRAKE RELEASE COMMAND. SOFTWARE WILL CAUSE FAULT	CRANE INOPERATIVE DUE TO DRIVE FAULT	
RESET DELAY	X7/22	O	WHEN ACTIVE PREVENTS THE RESTART OF THE CONTROLLER AFTER AN UPPER LIMIT FAULT CONDITION HAS OCCURRED	CONTROLLER WILL NOT OPERATE AFTER UPPER LIMIT REACHED	CONTROLLER CAN BE RESTARTED WITHOUT DELAY AFTER UPPER LIMIT REACHED	NONE. CRANE CONTROLS EXTERNAL TO CONTROLLER (RELAY CONTACTS) WILL HALT CRANE AT UPPER LIMIT	
ZERO SPEED	X7/23	O	WHEN MOTORSPEED IS GREATER THAN ZERO THIS OUTPUT IS ACTIVE	NO INDICATION OF REACHING ZERO SPEED	FALSE ZERO SPEED INDICATION. BRAKES WILL BE SET	SOFTWARE SHOULD CAUSE FAULT CONDITION, CRANE INOPERATIVE	
FAULT	X7/25	O	ACTIVE LEVEL (HI) INDICATES NO FAULT	NO DRIVE FAULT	CONTINUOUS DRIVE FAULT	CRANE INOPERATIVE	
+24V	X2/26	I	24 DC SUPPLY TO DRIVE	FUSE OPENS CIRCUIT	DRIVE INOPERATIVE	CRANE INOPERATIVE	
WATCH DOG TIMER	X2/24	I	NOT USED	NOT USED	NOT USED	NONE	
+5 VOLTS D.C.	X1/2	I	PROVIDES 5 VOLTS D.C. TO RCB FROM IPB BOARD	FUSE MAY OPEN	CONTROLLER INOPERATIVE	CRANE INOPERATIVE	
D GND	X1/1	I	GROUND FOR RCB BOARD	CONTROLLER INOPERATIVE	NONE	CRANE INOPERATIVE	
1 TO 15	X12/C 6-C20	O	ADDRESS BITS FROM ADDRESS BUS	(ANY BITS) INCORRECT ADDRESS PRESENTED TO EIB200	(ANY BITS) INCORRECT ADDRESS PRESENTED TO EIB200	OPERATOR CONSOLE SPEED INDICATOR INOPERATIVE	
WALL/NOT	X12/A 11	I	INDICATES THAT LOW ORDER BITS WILL BE WRITTEN TO RCB MEMORY	WRONG DATA BITS STORED IN RCB MEMORY. DRIVE FAULT WILL OCCURE DUE TO MISMATCH OF EXPECTED VS ACTUAL DATA	WRONG DATA BITS STORED IN RCB MEMORY. DRIVE FAULT WILL OCCURE DUE TO MISMATCH OF EXPECTED VS ACTUAL DATA	CRANE INOPERATIVE	

RCB BOARD INPUTS AND OUTPUTS CONT.

SIGNAL NAME	COMM.	I/O	SIGNAL FUNCTION	FAILS HIGH	FAILS LOW	WORST CASE EFFECT ON SYSTEM	COMMENTS
RD/NOT	X12/A 17	O	CONTROL BUS SIGNAL WHICH WHEN ACTIVE ENABLE READ OF SELECTED (ADDRESSED RAM/EEPROM)	NONE. APPROPRIATE ADDRESS COMBINATION IS ALSO NEEDED FOR READ TO OCCUR	NO RCB (CPU) READ OPERATION POSSIBLE	CRANE INOPERATIVE	
+5V	X12/C 31	O	SUPPLIES 5 VOLTS D.C. TO EIB200 BOARD	VOLATEG MONITOR WOULD PROVIDE CONTROLLER FAULT	HOIST CONSOLE SPEED INDICATOR INOPERATIVE	CRANE DOWN FOR REPAIRS	CRANE COULD BE OPERATED WITHOUT SPEED INDICATOR FUNCTIONING
CSERCB/NOT	X12/A 2	O	(CHECKSUM ERROR) INDICATES A CHECKSUM ERROR OCCURRED ON THE RCB	CONTROLLER INOPERAITIVE	MIISMATCH OF DATA WOULD RESULT IN CONTROLLER FAULT	CRANE INOPERATIVE	
CSDIU/NOT	X12/A 5	O	WHEN ACTIVE TURNS ON 3 STATE DEVICE ON DIU OPTION BOARD BUS	REQUESTED OUTPUT FROM 3 STATE FLIP FLOP, NOT AVAILABLE CONTROLLER FAULT	CONSTANT OUTPUT AVAILABLE FROM 3 STATE DEVICE. POSSIBLE DEGREGATION OF SIGNAL LEVELS ON BUS	CRANE INOPERATIVE DUE TO CONTROLLER FAULT	
WAH/NOT	X12/A 12	O	SELECTS MEMORY ADDRESSING HIGH ORDER BITS FOR WRITE OPERATION	DATA WRITTEN INTO WRONG LOCATION. SOFTWARE WILL FAULT	DATA WRITTEN INTO WRONG LOCATION. SOFTWARE WILL FAULT	CRANE INOPERATIVE	
ENBSC/NOT	X12A 29	O	OPTION CARD MEMORY BANK SELEC	NO MEMORY BANK SELECT SIGNAL TO OPTION CARD. MISSING/MISMATCHHED DATA RESULTS IN DRIVE FAULT	CONSTANT MEMORY BANK SELECT SIGNAL TO OPTION CARD. MISSING/MISMATCHED DATA RESULTS IN DRIVE FAULT	CRANE INOPERATIVE	
INTPER/NOT	X12/A 10	O	WHEN ACTIVE INDICATE INTERUPTS ARE PERMITTED FROM EIB BOARD	EIB BOARD UNABLE TO INTERRUPT RCB BOARD	CONTINUOUS INTERRUPTS ALLOWED FROM EIB BOARD	SOFTWARE SHOULD INTERRUPT WITH FAULT	
UPPER LIMIT	X7/7	I	PROVIDE UPPER LIMIT FAULT	CONTINUOUS UPPER LIMIT FAULT	NONE. EVEN THOUGH CONTROLLER DOES NOT ACKNOWLEDGE UPPER LIMIT VIOLATION. CRANE CONTROLS (E-STOP CIRCUIT) WILL HALT CRANE	CRANE INOPERATIVE	

RCB BOARD INPUTS AND OUTPUTS CONT.

SIGNAL NAME	COMM.	I/O	SIGNAL FUNCTION	FAILS HIGH	FAILS LOW	WORST CASE EFFECT ON SYSTEM	COMMENTS
GROUND	X3/C32/A32	I	PROVIDES COMMON GROUND TO RCB	(OPENS) LOSS OF GROUND REFERENCE FOR RCB SIGNALS	NONE	NONE	
+5V	X3/C31/C31	I	PROVIDES 5VDC FOR RCB OPERATION	RCB/DRIVE FAULT	RCB/DRIVE FAULT	CRANE INOPERATIVE	
ADDRESS BITS A9 TO A15	X3/C2-C8	O	CONTROL SYSTEM ADDRESS BUS BITS. SELECT LOACTION FROM WHICH TO RETRIEVE DATA FOR CONTROLLER OPERATIONS	(ANY ONE) INCORRECT DATA FETCHED/STORED. DATA FETCHED. SOFTWARE TABLES MATCHED TO INCORRECT DATA SHOULD RESULT IN CONTROLLER FAULT. IF NOT E-STOP WILL HALT OPERATION	(ANY ONE) INCORRECT DATA FETCHED/STORED. DATA FETCHED. SOFTWARE TABLES MATCHED TO INCORRECT DATA SHOULD RESULT IN CONTROLLER FAULT. IF NOT E-STOP WILL HALT OPERATION	E-STOP ACTIVATION TO HALT CRANE INOPERATIVE	
+12V	X3/A20	I	PROVIDES +12 VDC FOR RCB OPERATION	FUSES SHOULD BLOW TO PROTECT CIRCUITS	RCB WILL NOT OPERATE	CRANE INOPERATIVE	
-12V	X3/C30	I	PROVIDES -12 VDC FOR RCB OPERATION	FUSES SHOULD BLOW TO PROTECT CIRCUITS	RCB WILL NOT OPERATE	CRANE INOPERATIVE	
RD/NOT	X3/A17	I	READ COMMAND INSTRUCTS SELECTED DEVICE (EPROM) RAM TO MAKE ITS DATA AVAILABLE TO THE DATA BUS	DATA FROM SELECTED DEVISE WILL NOT BE AVAILABLE FOR DATA BUS OPERATIONS	CNSTANT DATA AVAILABLE FROM DEVICE SELECTED, HOWEVER ADDRESS LINE MUST ALSO BE ENABLED FOR GIVEN DEVICE	CONTROLLER FAULTS	
ALE	X3/A16	I	WHEN ACTIVE INDICATES DATA TO BE READ/WRITTEN IS ADDRESS DATA	INCORRECT DATA ON BUS	INCORRECT/NO DATA ON BUS	CONTROLLER FAULT	

EIB BOARD INPUTS AND OUTPUTS

SIGNAL NAME	COMM.	I/O	SIGNAL FUNCTION	FAILS HIGH	FAILS LOW	WORST CASE EFFECT ON SYSTEM	COMMENTS
DAC1	X90/1	O	ANALOG VOLTAGE PROPORTIONAL TO HOIST SPEED	INCORRECT SPEED INDICATION AT OPERATOR CONTROL	INCORRECT SPEED INDICATION AT OPERATOR CONTROL	DELAY FOR REPAIRS	
AGND	X90/2	I	NOT USED	NOT USED	NOT USED	NOT USED	
DAC2	X90/3	I	ANALOG VOLTAGE PROPORTIONAL TO MOTOR CURRENT	NOT USED	NOT USED	NOT USED	
AGND	X90/4	I	PROVIDES COMMON GROUND	(OPENS) POSSIBLE INCORRECT SPEED INDICATION AT OPERATOR CONSOLE	NONE	DELAY FOR REPAIRS	

DDA POWER BOARD INPUTS AND OUTPUTS

SIGNAL NAME	COMM.	I/O	SIGNAL FUNCTION	FAILS HIGH	FAILS LOW	WORST CASE EFFECT ON SYSTEM	COMMENTS
HAL1	L1	I	INPUT POWER PHASE 1	LOSS OF PHASE RELATIONSHIP WILL RESULT IN DRIVE SHUT DOWN	LOSS OF PHASE RELATIONSHIP WILL RESULT IN DRIVE SHUT DOWN	CRANE INOPERATIVE	
HAL2	L2	I	INPUT POWER PHASE 2	LOSS OF PHASE RELATIONSHIP WILL RESULT IN DRIVE SHUT DOWN	LOSS OF PHASE RELATIONSHIP WILL RESULT IN DRIVE SHUT DOWN	CRANE INOPERATIVE	
HAL1	L3	I	INPUT POWER PHASE 3	LOSS OF PHASE RELATIONSHIP WILL RESULT IN DRIVE SHUT DOWN	LOSS OF PHASE RELATIONSHIP WILL RESULT IN DRIVE SHUT DOWN	CRANE INOPERATIVE	
	A1	O	SUPPLIES ARMATURE CURRENT	ARMATURE CURRENT INCREASE ABOVE DESIRED LEVEL. CONTROLLER WILL FAULT IF SOFTWARE LIMITS ARE EXCEEDED	ARMATURE CURRENT DECREASE BELOW DESIRED LEVEL. CONTROLLER WILL FAULT IF SOFTWARE LIMITS ARE EXCEEDED	CONTROLLER FAULT, CRANE INOPERATIVE	
	A2	O	SUPPLIES ARMATURE CURRENT	ARMATURE CURRENT INCREASE ABOVE DESIRE LEVEL. CONTROLLER WILL FAULT IF SOFTWARE LIMITS ARE EXCEEDED	ARMATURE CURRENT DECREASE BELOW DESIRED LEVEL. CONTROLLER WILL FAULT IF SOFTWARE LIMITS ARE EXCEEDED	CONTROLLER FAULT, CRANE INOPERATIVE	

DIU 105 BOARD INPUTS AND OUTPUTS

SIGNAL NAME	COMM.	I/O	SIGNAL FUNCTION	FAILS HIGH	FAILS LOW	WORST CASE EFFECT ON SYSTEM	COMMENTS
DATA 0 TO 15	X53/A19 TO A26	O	DATA BITS 8 TO 15 CONTAIN ENCODER (POSITION INFORMATION TO RCB)	CORRUPTED ENCODER DATA PASSED TO RCB BOARD	CORRUPTED ENCODER DATA PASSED TO RCB BOARD/CHECKSUM ERROR	CRANE INOPERATIVE	
INTPER/NOT	X53/A19 TO A26	O	DATA BITS 1 TO 7 CONTAIN ENCODER (POSITION INFORMATION TO RCB)	CORRUPTED ENCODER DATA PASSED TO RCB BOARD	CORRUPTED ENCODER DATA PASSED TO RCB BOARD/CHECKSUM ERROR	CRANE INOPERATIVE	
ENCOK	X53/A27	O	ENCODER OK, INDICATES THE ENCODER OUTPUT IS OK	CONSTANT ENCODER OK, EVEN IF ENCODER FAILS	CONSTANT ENCODER FAULT, DRIVE WILL FAOULT	DRIVE WILL FAULT WITH IMPROPER ENCODER OUTPUT DUE TO MISMATCH OF POSITION AND SPEED. E-STOP CAN HALT OPERATION	
GROUND	X53/A29	I	PROVIDES GROUND REFERENCE TDIU BOARD	(OPENS) LOSS OF GROUND REFERENCE FOR DIU SIGNALS	NONE	NONE	
P1.0	X53/C9	I	NOT USED	NOT USED	NOT USED	NOT USED	
T2CLK	X53/C10	I	NOT USED	NOT USED	NOT USED	NOT USED	
ALE	X53/C16	I	NOT USED	NOT USED	NOT USED	NOT USED	
RSTRCB/NOT	X53/C14	I	NOT USED	NOT USED	NOT USED	NOT USED	
CSERCB/NOT	X53/C12	I	NOT USED	NOT USED	NOT USED	NOT USED	
WAH/NOT	X53/C11	I	NOT USED	NOT USED	NOT USED	NOT USED	
WAL/NOT	X53/C11	I	NOT USED	NOT USED	NOT USED	NOT USED	
ADDRESS BITS A1 TO A8	X53/A2 -A9	I	CONTROL SYSTEM ADDRESS BUS BITS. SELECT LOACTION FROM WHICH TO RETRIEVE DATA FOR CONTROLLER OPERATIONS	(ANY ONE) INCORRECT DATA FETCHED/STORED. DATA FETCHED. SOFTWARE TABLES MATCHED TO INCORRECT DATA SHOULD RESULT IN CONTROLLER FAULT. IF NOT E-STOP WILL HALT OPERATION	(ANY ONE) INCORRECT DATA FETCHED/STORED. DATA FETCHED. SOFTWARE TABLES MATCHED TO INCORRECT DATA SHOULD RESULT IN CONTROLLER FAULT. IF NOT E-STOP WILL HALT OPERATION	E-STOP ACTIVATION TO HALT CRANE INOPERATIVE	

DIU 105 BOARD INPUTS AND OUTPUTS CONT.

SIGNAL NAME	COMM.	I/O	SIGNAL FUNCTION	FAILS HIGH	FAILS LOW	WORST CASE EFFECT ON SYSTEM	COMMENTS
ADDRESS BITS A9 TO A15	X53/C2 -C8	I	CONTROL SYSTEM ADDRESS BUS BITS. SELECT LOACTION FROM WHICH TO RETRIEVE DATA FOR CONTROLLER OPERATIONS	(ANY ONE) INCORRECT DATA FETCHED/STORED. DATA FETCHED. SOFTWARE TABLES MATCHED TO INCORRECT DATA SHOULD RESULT IN CONTROLLER FAULT. IF NOT E-STOP WILL HALT OPERATION	(ANY ONE) INCORRECT DATA FETCHED/STORED. DATA FETCHED. SOFTWARE TABLES MATCHED TO INCORRECT DATA SHOULD RESULT IN CONTROLLER FAULT. IF NOT E-STOP WILL HALT OPERATION	E-STOP ACTIVATION TO HALT CRANE INOPERATIVE	
EARTH	X52/1	I	GROUND, PROVIDES COMMON EARTH GROUND FOR CONTROLLER/CRANE COMPONENTS	(OPENS) POSSIBLE NOISE INTRODUCED INTO SYSTEM	NONE	CRANE INOPERATIVE DUE TO NUISANCE FAULTS	
+5VDC	X52/2		PROVIDES 5VDC TO DIU BOARD FOR OPERATION	CONTROLLER (VOLTAGE MONITOR FAULT)	CONTROLLER (VOLTAGE MONITOR FAULT)	CRANE INOPERATIVE	
GROUND	X52/3	I	PROVIDES GROUND REFERENCE TO DIU BOARD	(OPENS) LOSS OF GROUND REFERENCE FOR DIU SIGNALS	NONE	NONE	
A	X54/1	I	INCREMENTAL PULSES FROM LINE ENCODER FOR GENERATION OF HOIST MOTOR SHAFT ROTATIONAL POSITION AND SPEED STATUS	LOSS OF ANY ENCODER INPUT WILL RESULT IN ENCODER FAULT		CRANE INOPERATIVE	
A NOT	X54/6	I					
B	X54/3	I					
B NOT	X54/8	I					
ERATH	X54/5	I					
NP (2)	X54/2	I					
NP/NOT (2NOT)	X54/7	I					
DGND	X54/4	I					
VS	X54/9	I					
OA	X56/1	O	PROVIDES OUTPUT TO HOIST POSITION INDICATOR	HOIST POSITION INDICATOR WILL BE INOPERATIVE	HOIST POSITION INDICATOR WILL BE INOPERATIVE	CRANE WILL STILL BE IN OPERATION BUT OPERATORS READOUT WILL BE INCORRECT	

DIU 105 BOARD INPUTS AND OUTPUTS CONT.

SIGNAL NAME	COMM.	I/O	SIGNAL FUNCTION	FAILS HIGH	FAILS LOW	WORST CASE EFFECT ON SYSTEM	COMMENTS
OA NOT	X56/6	O	NOT USE	NOT USE	NOT USE	NOT USE	
OB	X56/3	O	PROVIDES OUTPUT TO HOIST POSITION INDICATOR	HOIST POSITION INDICATOR WILL BE INOPERATIVE	HOIST POSITION INDICATOR WILL BE INOPERATIVE	CRANE WILL STILL BE IN OPERATION BUT OPERATORS READOUT WILL BE INCORRECT	
OB NOT	X56/8	O	NOT USE	NOT USE	NOT USE	NOT USE	
EARTH	X56/5	O	NOT USE	NOT USE	NOT USE	NOT USE	
ONP (2)	X56/2	O	NOT USE	NOT USE	NOT USE	NOT USE	
ONP NOT (2 NOT)	X56/7	O	NOT USE	NOT USE	NOT USE	NOT USE	
DGND	X56/4	O	PROVIDES COMMON GROUND WITH OTHER CONTROLLER COMPONENTS	POSSIBLE INTERMITTENT FALSE FAULT INDICATIONS	POSSIBLE INTERMITTENT FALSE FAULT INDICATIONS	CRANE INOPERATIVE	
NC	X56/9	O	NOT USE	NOT USE	NOT USE	NOT USE	

SOB BOARD INPUTS AND OUTPUTS

SIGNAL NAME	COMM.	I/O	SIGNAL FUNCTION	FAILS HIGH	FAILS LOW	WORST CASE EFFECT ON SYSTEM	COMMENTS
HEATSINK THERMOSTAT	X29	O	PROVIDES OUTPUT TO IPB BOARD HEATSINK	CONTROLLER SHUTDOWN	POSSIBLE TRIP OF CIRCUIT BREAKER OR DAMAGE TO CONTROLLER	CRANE INOPERATIVE	
ISOLATED FIELD CURRENT FEEDBACK FROM SOB BOARD	X25	O	PROVIDES FIELD CURRENT FEEDBACK TO ISOLATATION MEASURING UNIT BOARD	CONTROLLER FAULT	CONTROLLER FAULT	CRANE INOPERATIVE	
NON ISOLATED ARMATURE VOLTAGE FEEDBACK FROM SOB BOARD	X25	O	PROVIDE ARMATURE VOLTAGE FEEDBACK TO ISOLATATION MEASURING UNIT BOARD	CONTROLLER FAULT	CONTROLLER FAULT	CRANE INOPERATIVE	
HEATSINK THERMOSTAT	X44/1 AND X44/2	I	PROTECTS THYRISTOR MODULE BY OPENING IF OVERTEMP IS DETECTED AT THYRISTOR HEAT SINK	(OPENS PREMATURELY) CONTROLLER FAULT	9FAILS TO OPEN) POSSIBLE THYRISTOR DAMAGE, OTHER CONTROL CIRCUITS WILL PRODUCE CONTROLLER FAULT	CRANE INOPERATIVE	
CURRENT TRANSFOEMER 1	X41/1 AND 8	I	PROVIDES ARMATURE CURRENT FEEDBACK	(XFORMER OPENS) CONTROLLER WILL HALT WITH OVER VOLTAGE	(XFORMER OPENS) CONTROLLER WILL AHLT WITH OVER CURRENT ERROR	CRANE INOPERATIVE	
CURRENT TRANSFOEMER 2	X41/2 AND 12	I	PROVIDES ARMATURE CURRENT FEEDBACK	(XFORMER OPENS) CONTROLLER WILL AHLT WITH OVER VOLTAGE	(XFORMER OPENS) CONTROLLER WILL AHLT WITH OVER VOLTAGE	E-STOP ACTIVATION TO HALT CRANE INOPERATIVE	
CURRENT TRANSFOEMER 3	X41/4 AND 16	I	PROVIDES ARMATURE CURRENT FEEDBACK	(XFORMER OPENS) CONTROLLER WILL AHLT WITH OVER VOLTAGE	(XFORMER OPENS) CONTROLLER WILL AHLT WITH OVER VOLTAGE	E-STOP ACTIVATION TO HALT CRANE INOPERATIVE	
INPUTS TO THYRISTOR OVER VOLTAGE PROTECTION MOV'S	X42/61 AND X42/62, X42/63, X42/64	O	PROVIDES MOV PROTECTION TO THYRISTOR	(OPENS PREMATURELY) LOSS OF PROTECTION TO ASSOCIATED THYRISTOR	(SHORTS) OVER CIRCUIT INDICATION IN ASSOCIATED THYRISTOR CIECUIT	CRANE INOPERATIVE	

IPB BOARD INPUTS AND OUTPUTS

SIGNAL NAME	COMM.	I/O	SIGNAL FUNCTION	FAILS HIGH	FAILS LOW	WORST CASE EFFECT ON SYSTEM	COMMENTS
SHUNT FIELD	X20A/24	I	PROVIDES POWER TO MOTOR SHUNT FIELD	MOTOR RUNS SLOWER	MOTOR RUNS FASTER	CONTROLLER SPEED CONTROL LOOP WILL ADJUST FOR SPEED DEVIATION BETWEEN ACTUAL AND REQUESTED	
SHUNT FIELD	X20A/25	I	PROVIDES POWER TO MOTOR SHUNT FIELD	MOTOR RUNS SLOWER	MOTOR RUNS FASTER	CONTROLLER SPEED CONTROL LOOP WILL ADJUST FOR SPEED DEVIATION BETWEEN ACTUAL AND REQUESTED	
NONE	X23/1	I	NOT USED	NOT USED	NOT USED	NOT USED	
+5VDC	X23/2	I	PROVIDES +5VDC TO IPB CIRCUIT	FUSE SHOULD OPEN	CONTROLLER INOPERATIVE	CRANE INOPERATIVE	
NONE	X23/3	I	NOT USED	NOT USED	NOT USED	NOT USED	
230 VAC	X20B PINS 50. 51. 52	I	PROVIDES 460 VAC POWER TO IPB BOARD	FUSES WILL OPEN	CONTROLLER WILL NOT OPERATE	CRANE OPOERATIVE	
+5VDC	X221/2	O	SUPPLIES 5 VOLTS D.C. POWER TO RCB BOARD	FUSES WILL OPEN	CONTROLLER WILL NOT OPERATE	CRANE OPOERATIVE	
DGND	X21/1	O	GROUND SIDE OF 5 VOLT D.C. SUPPLY TO RCB BOARD	(OPENS) LOSS OF 5 VOLTS D.C. TO RCB BOARD	CONTROLLER WILL NOT OPERATE	CRANE INOPERATIVE	
FIELD CURRENT OUTPUT AND FEEDBACK	X31/1, 2,6,7, 11,12, 16,17	I/O	PROVIDES CURRENT TO MOTOR FIELD FOR OPERATION	MOTOR WILL RUN SLOWER	MOTOR WILL NOT OPERATE	CONTROLLER SPEED CONTROL LOOP WILL ADJUST FOR SPEED DEVIATION BETWEEN ACTUAL AND REQUESTED	
FIELD THYRISTOR GATE SIGNALS	X30/1, 2,5,6	O	PROVIDES GATE SIGNAL TO MOTOR FIELD THYRISTORS (TURNING THEM ON)	CONTROLLER WILL DETECT INCORRECT FIRING ANGLE	CONTROLLER WILL FAULT MOTOR INOPERATIVE	CRANE INOPERATIVE	
ARMATURE THYRISTOR GATE SIGNALS	X26A, X26B, X27A, X27B	O	PROVIDES GATE SIGNALS TO ARMATURE THYRISTORS (TURNING THEM ON)	DAMAGE TO EFFECTED THYRISTOR CONTROLLER WILL FAULT	EFFECTED THYRISTOR WILL NOT FIRE, CONTROLLER WILL FAULT	CRANE INOPERATIVE	
HEATSINK THERMOSTAT	X29	I	PROVIDES INPUT FROM SNUBBER HEATSINK	CONTROLLER SHUTDOWN	POSSIBLE TRIP OF CIRCUIT BREAKER OR DAMAGE TO CONTROLLER	CRANE INOPERATIVE	

IPB BOARD INPUTS AND OUTPUTS CONT.

SIGNAL NAME	COMM.	I/O	SIGNAL FUNCTION	FAILS HIGH	FAILS LOW	WORST CASE EFFECT ON SYSTEM	COMMENTS
ISOLATED FIELD CURRENT FEEDBACK FROM SOB BOARD	X25	I	PROVIDES FIELD CURRENT FEEDBACK TO ISOLATATION MEASURING UNIT BOARD	CONTROLLER FAULT	CONTROLLER FAULT	CRANE INOPERATIVE	
NON ISOLATED ARMATURE VOLTAGE FEEDBACK FROM SOB BOARD	X25	I	PROVIDE ARMATURE VOLTAGE FEEDBACK TO ISOLATATION MEASURING UNIT BOARD	CONTROLLER FAULT	CONTROLLER FAULT	CRANE INOPERATIVE	
HSKTEMPN	X22/2		HEAT SINK THERMOSTANT RETURN	(OPENS) IN ACCURATE HEAT SINK THERMOSTAT INPUT	NONE	CRANE INOPERATIVE DUE TO HEATSINK OVERTEMP AND LOSS OF THYRISTOR OUTPUT	
PHFAULT	X22/3	I	SIGNAL INPUT FROM RCB BOARD INDICATES INCOMING AC POWER MAY HAVE LOST A PHASE OR IS NOISY	CONTINUOUS CONTROLLER FAULT (PHASE FAULT)	Phase fault will not be detected, however over current, over voltage, or other controller fault will occur	CRANE INOPERATIVE	
LOW VOLTS	X22/4		INDICATES A LOW VOLTAGE CONDITION HAS BEEN DETECTED	NO INDICATION OF LOW VOLTAGE CONDITION BUT POSSIBLE INTERMITTENT DRIVE FAULTS	CONSTANT LOW VOLTAGE INDICATION AND DRIVE FAULT	CRANE INOPERATIVE	
BCARM	X22/6		THYRISTOR BANK CONTROL	INCORRECT THYRISTOR FIRING CONTROLLER FAULT	NO THYRISTOR FIRING CONTROLLER UNIT	CRANE INOPERATIVE	
SHFTARM	X22/9		THYRISTOR ROTATION FIRING TIMING CONTROL	INCORRECT THYRISTOR FIRING CONTROLLER FAULT	NO THYRISTOR FIRING CONTROLLER UNIT	CRANE INOPERATIVE	
DSHFTARM	X22/10		THYRISTOR ROTATION FIRING TIMING CONTROL	INCORRECT THYRISTOR FIRING CONTROLLER FAULT	NO THYRISTOR FIRING CONTROLLER UNIT	CRANE INOPERATIVE	
IGNON	X22/11		THYRISTOR PULSE TRANSFORMER POWER ON/GATE ENABLE (ARMATURE)	ARMATURE THYRISTOR ENABLED CONTINUOUSLY CONTROLLER FAULT	CONTROLLER FAULT	CRANE INOPERATIVE	
FIELDIGN	X22/12		THYRISTOR PULSE TRANSFORMER POWER ON/GATE ENABLE (ARMATURE)	FIELD THYRISTOR ENABLED CONTINUOUSLY CONTROLLER FAULT	CONTROLLER FAULT	CRANE INOPERATIVE	

IPB BOARD INPUTS AND OUTPUTS CONT.

SIGNAL NAME	COMM.	I/O	SIGNAL FUNCTION	FAILS HIGH	FAILS LOW	WORST CASE EFFECT ON SYSTEM	COMMENTS
HSKTEMPP	X22/13		HEAT SINK THERMOSTANT	(OPENS) IN ACCURATE HEAT SINK THERMOSTAT INPUT	NONE	CRANE INOPERATIVE DUE TO HEATSINK OVERTEMP AND LOSS OF THYRISTOR OUTPUT	
RELOUT	X22/14		NOT USED	NOT USED	NOT USED	NOT USED	
IFIPB	X24/2		FILED CURRENT FEEDBACK	INCORRECT CURRENT FEEDBACK LEVEL. FIELD CURRENT WILL BE INCORRECTLY REDUCED	INCORRECT CURRENT FEEDBACK LEVEL. FIELD CURRENT WILL BE INCORRECTLY REDUCED	CRANE SPEED MAY VARY BUT NOT OUTSIDE PRE ESTABLISHED SOFTWARE LIMITS SET FOR EACH MODE	CURRENT CAN VARY BUT NOT OUTSIDE PRESET SOFTWARE LIMITS. CONTROLLER ALSO HAS SPEED LOOP
UAIPB	X24/3		ARMATURE VOLTAGE FEEDBACK SIGNAL	INCORRECT FIELD VOLTAGE FEEDBACK LEVEL. FIELD CURRENT WILL BE INCORRECTLY REDUCED	INCORRECT VOLTAGE FEEDBACK LEVEL. FIELD CURRENT WILL BE INCORRECTLY REDUCED	CRANE SPEED MAY VARY BUT NOT OUTSIDE PRE ESTABLISHED SOFTWARE LIMITS SET FOR EACH MODE	VOLTAGE CAN VARY BUT NOT OUTSIDE PRESET SOFTWARE LIMITS. CONTROLLER ALSO HAS SPEED LOOP
IFOIPB	X24/4		FILED CURRENT FEEDBACK SIGNAL (COMMON)	INCORRECT FIELD CURRENT FEEDBACK LEVEL. FIELD CURRENT WILL BE INCORRECTLY REDUCED	INCORRECT CURRENT FEEDBACK LEVEL. FIELD CURRENT WILL BE INCORRECTLY REDUCED	CRANE SPEED MAY VARY BUT NOT OUTSIDE PRE ESTABLISHED SOFTWARE LIMITS SET FOR EACH MODE	CURRENT CAN VARY BUT NOT OUTSIDE PRESET SOFTWARE LIMITS. CONTROLLER ALSO HAS SPEED LOOP
UAOIPB	X24/6		ARMATURE VOLTAGE FEEDBACK SIGNAL (COMMON)	INCORRECT FIELD VOLTAGE FEEDBACK LEVEL. FIELD CURRENT WILL BE INCORRECTLY REDUCED	INCORRECT VOLATGE FEEDBACK LEVEL. FIELD CURRENT WILL BE INCORRECTLY REDUCED	CRANE SPEED MAY VARY BUT NOT OUTSIDE PRE ESTABLISHED SOFTWARE LIMITS SET FOR EACH MODE	VOLTAGE CAN VARY BUT NOT OUTSIDE PRESET SOFTWARE LIMITS. CONTROLLER ALSO HAS SPEED LOOP
DFIPB	X24/7		FIELD PHASE SYNCHRONIZATION SIGANL (LINE)	INCORRECT FIELD PHASE TO AMU	INCORRECT PHASE TO AMU	CONTROLLER FAULT	

IPB BOARD INPUTS AND OUTPUTS CONT.

SIGNAL NAME	COMM.	I/O	SIGNAL FUNCTION	FAILS HIGH	FAILS LOW	WORST CASE EFFECT ON SYSTEM	COMMENTS
IAOIPB	X24/8		ARMATURE CURRENT FEEDBACK SIGNAL (COMMON)	INCORRECT ARMATURE CURRENT FEEDBACK LEVEL. FIELD CURRENT WILL BE INCORRECTLY REDUCED	INCORRECT CURRENT FEEDBACK LEVEL. FIELD CURRENT WILL BE INCORRECTLY REDUCED	CRANE SPEED MAY VARY BUT NOT OUTSIDE PRE ESTABLISHED SOFTWARE LIMITS SET FOR EACH MODE	CURRENT CAN VARY BUT NOT OUTSIDE PRESET SOFTWARE LIMITS. CONTROLLER ALSO HAS SPEED LOOP
SYM1IPB	X24/9		ARMATURE LINE SYNCHRONIZATION SIGNAL	INCORRECT ARMATURE PHASE TO AMU	INCORRECT PHASE TO AMU	CONTROLLER FAULT	
DFOIPB	X24/10		FIELD PHASE SYNCHRONIZATION SIGNAL (COMMON)	INCORRECT ARMATURE PHASE TO AMU	INCORRECT PHASE TO AMU	CONTROLLER FAULT	
-12V	X24/12	O	NOT USED	NOT USED	NOT USED	NOT USED	
+12V	X24/C13	O	NOT USED	NOT USED	NOT USED	NOT USED	
AGNDPB	X24/13	I	PROVIDES COMMON AC GROUND FOR SYSTEM COMPONENTS	(OPENS) POSSIBLE FALSE CONTROLLER FAULTS	NONE	NOT USED	
GROUND	X24/4	I	PROVIDES COMMON GROUND POINT BETWEEN BOARDS	OTHER POINTS PROVIDE GROUND	NOT APPLICABLE	NONE	

5.3 FLEX HOSE FMEA WORKSHEETS

There are no flex hoses associated with this system.

5.4 ORFICE FMEA WORKSHEETS

There are no orifices associated with this system.

5.5 FIETER FMEA WORKSHEETS

There are no filters associated with this system.

5.6 CRITICAL ITEM LIST

There are no critical items identified during this analysis.

5.7 CRITICAL FLEXHOSES

Not applicable.

5.8 CRITICAL ORIFICES

Not applicable.

5.9 CRITICAL FILTERS

Not applicable.

5.10 CRITICAL CATEGORY 1R ITEMS

There are 3 category 1R items identified during the analysis of the critical output functions identified in section 4.0 for this system. The 1R items are summarized on the following Criticality Category 1R Items Worksheets

1R REDUNDANCY WORKSHEET			SHEET 1 OF 2	
PROGRAM MODEL NO: K61-2944	**SYSTEM/SUBSYSTEM:** SSPF 30-TON BRIDGE CRANE	**STATION SET** SSPF	**FACILITY:** SPACE STATION PROCESSING FACILITY	**SCHEMATIC DWG NO.** D-2168-MO3 D-2168-MO4
BASELINE: 580.01	**LOCATION:** SPACE STATION PROCESSING FACILITY HIGH BAY	**PREPARED BY:** J WYCKOFF, BOEING	**PCM:** NONE	**DATE:** MARCH 1993

FIND NO. NASA NO. MFG NO.	PART NAME PMN NUMBER DRAWING NUMBER FMN NUMBER	FAILURE MODE CAUSE(S)	FAILURE EFFECT	REDUNDANCY SCREENS PASS	FAIL	TEST AND INSPECTION REQUIREMENT (SS	TEAR DOWN ANALYSIS REQUIRED
NONE NONE D-15223	MAIN HOIST GERA REDUCERS K61-2944 D-2168-M03 21CRS1-001.001	DISENGAGES BROKEN TEETH	FAILURE OF ONE OF THE TWO REDUCERS WILL CAUSE A DELAY IN OPERATIONS. IF BOTH REDUCERS FAIL, LOAD WILL DROP. COULD CAUSE LOSS OF LIFE AND/OR FLIGHT HARDWRE	A C	B	OMRSD TBD WILL REQUIRE CRANE TO BE OPERATED THROUGH ITS ENTIRE RANGE PRIOR TO EACH CRITICAL LIFT OR ONCE A DAY IF MULTIPLE LIFTS ARE TO BE DONE. ALSO CRANES WILL BE LOAD TESTED TO 100% OF RATED LOAD ANNUALLY	NO
NONE NONE F-104	COUPLING K61-2944 D-2168-M03 21CRS1-001.002	DISENGAGES OVERSTRESS	FAILURE OF ONE COUPLING WILL CAUSE A DELAY IN OPERATIONS. FAILURE OF BOTH COUPLINGS WILLCAUSE LOAD TO DROP. COULD CAUSE LOSS OF LIFE AND/OR FLIGHT HARDWRE	A C	B	OMRSD TBD WILL REQUIRE CRANE TO BE OPERATED THROUGH ITS ENTIRE RANGE PRIOR TO EACH CRITICAL LIFT OR ONCE A DAY IF MULTIPLE LIFTS ARE TO BE DONE. ALSO CRANES WILL BE LOAD TESTED TO 100% OF RATED LOAD ANNUALLY	NO

1R REDUNDANCY WORKSHEET			SHEET 2 OF 2	
PROGRAM MODEL NO: K61-2944	**SYSTEM/SUBSYSTEM:** SSPF 30-TON BRIDGE CRANE	**STATION SET** SSPF	**FACILITY:** SPACE STATION PROCESSING FACILITY	**SCHEMATIC DWG NO.** D-2168-MO3 D-2168-MO4
BASELINE: 580.01	**LOCATION:** SPACE STATION PROCESSING FACILITY HIGH BAY	**PREPARED BY:** J WYCKOFF, BOEING	**PCM:** NONE	**DATE:** MARCH 1993

FIND NO. NASA NO. MFG NO.	PART NAME PMN NUMBER DRAWING NUMBER FMN NUMBER	FAILURE MODE CAUSE(S)	FAILURE EFFECT	REDUNDANCY SCREENS PASS	FAIL	TEST AND INSPECTION REQUIREMENT (SS	TEAR DOWN ANALYSIS REQUIRED
NONE NONE SBE-10	HOIST ELECTROMECHANICAL BRAKE (MAIN HOIST) K61-2944 D-2168-M03 21CRS1-001.003	FAILS TO ENGAGE WORN FRICTION MATERIAL	NO EFFECT, IF BOTH ELECTROMECHANICAL BRAKES FAAIL, LOAD WILL DROP. COULD CAUSE LOSS OF LIFE AND/OR FLIGHT HARDWRE	A C	B	OMRSD TBD WILL REQUIRE CRANE TO BE LOAD TESTED ANNUALLY TO 100% OF RATED LOAD. ALSO HOIST IS MOVED THROUGH ITS ENTIRE RANGE OF MOTION PRIOR TO EACH LIFT OR ONCE A DAY IF MULTIPLE LIFTS ARE TO BE DONE.	NO

SECTION VI
HAZARD ANALYSIS

6.1 Objective

The objective of this Hazard Analysis on the LHA Bracketry Set is to identify and document any system or equipment design safety concerns that represent a risk to safe system operation. This Hazard Analysis was conducted in accordance with the guidelines in KNPR 8715.3 KSC Safety Practices Procedural Requirements.

This Safety Hazard Analysis (SHA) compliments the reliability analysis by supporting hazards normally ground ruled out of the FEMA such as generic hazards or passive components. The following were assessed in the preparation of this SHA:

- Concerns that could cause injury to personnel and/or damage to flight hardware.
- Design issues that effect normal operations of the system.

6.2 Results

The areas assessed by this Hazard Analysis are developed on the attached fault tree and are documented on the SHA worksheets, which follow. The SHA identified the following hazardous conditions:

a) Impact/Collision
b) Catastrophic Structural Failure
c) Electrical System failure
d) Passive Component Failure

There were no uncontrolled hazards identified; therefore, no formal Hazard Report for NASA Level III Risk Assessment Board (RAB) approval was generated.

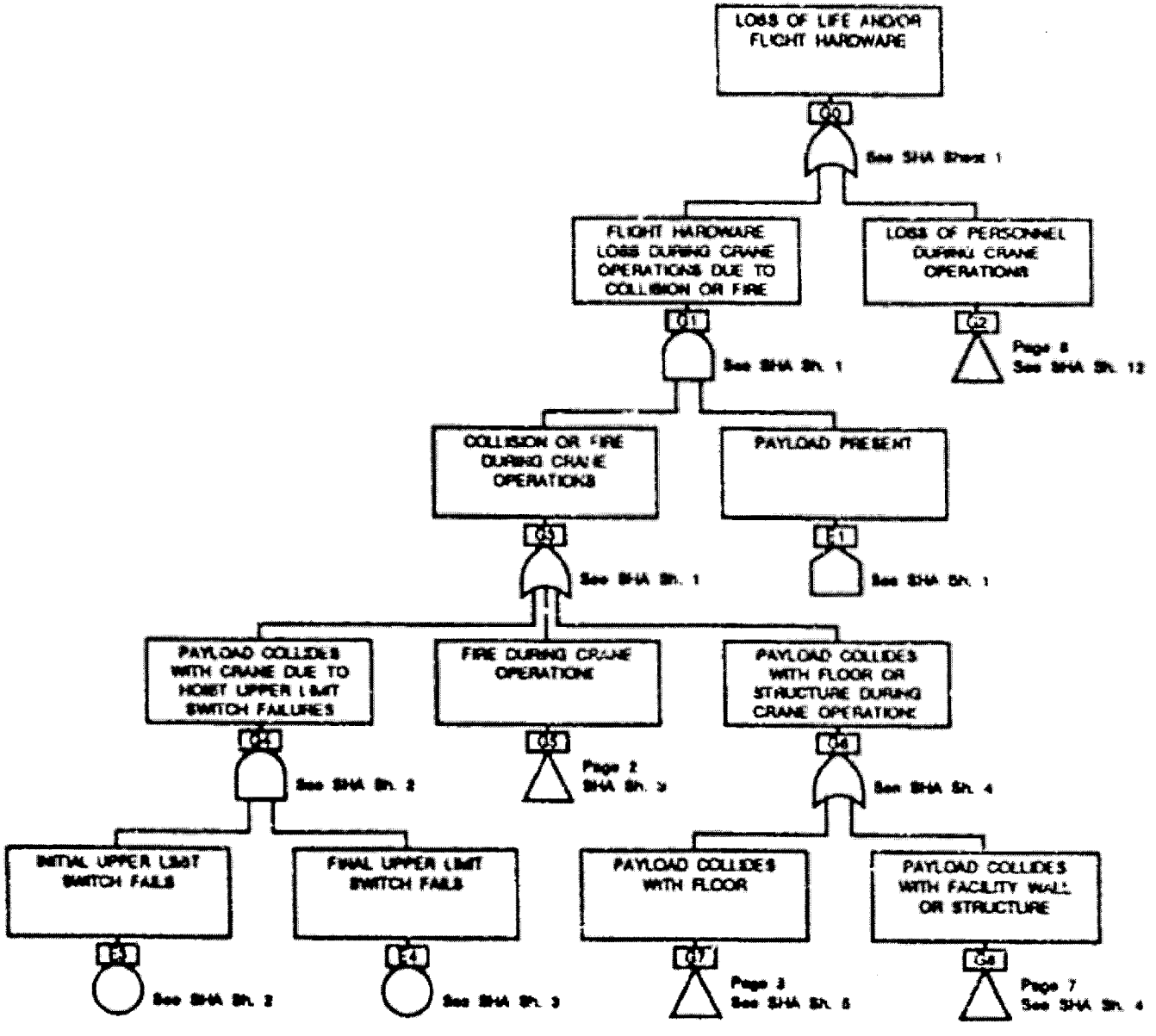
LOSS OF LIFE AND/OR FLIGHT HARDWARE
G0
See SHA Sheet 1
FLIGHT HARDWARE LOSS DURING CRANE OPERATIONS DUE TO COLLISION OR FIRE
LOSS OF PERSONNEL DURING CRANE OPERATIONS
G1
See SHA Sh. 1
G2
Page 8
See SHA Sh. 12
COLLISION OR FIRE DURING CRANE OPERATIONS
PAYLOAD PRESENT
G3
See SHA Sh. 1
E1
See SHA Sh. 1
PAYLOAD COLLIDES WITH CRANE DUE TO HOIST UPPER LIMIT SWITCH FAILURES
FIRE DURING CRANE OPERATIONS
PAYLOAD COLLIDES WITH FLOOR OR STRUCTURE DURING CRANE OPERATIONS
G4
See SHA Sh. 2
G5
Page 2
SHA Sh. 3
G6
See SHA Sh. 4
INITIAL UPPER LIMIT SWITCH FAILS
FINAL UPPER LIMIT SWITCH FAILS
PAYLOAD COLLIDES WITH FLOOR
PAYLOAD COLLIDES WITH FACILITY WALL OR STRUCTURE
E3
See SHA Sh. 2
E4
See SHA Sh. 3
G7
Page 3
See SHA Sh. 5
G8
Page 7
See SHA Sh. 4

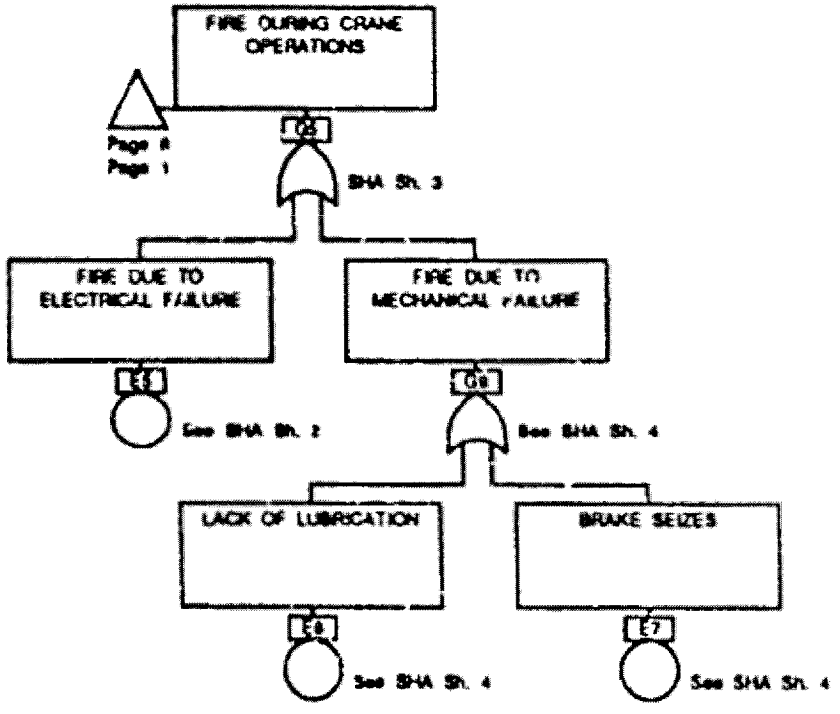
FIRE DURING CRANE OPERATIONS
Page 8
Page 1
G5
SHA Sh. 3
FIRE DUE TO ELECTRICAL FAILURE
FIRE DUE TO MECHANICAL FAILURE
E5
See SHA Sh. 2
G6
See SHA Sh. 4
LACK OF LUBRICATION
BRAKE SEIZES
E6
See SHA Sh. 4
E7
See SHA Sh. 4

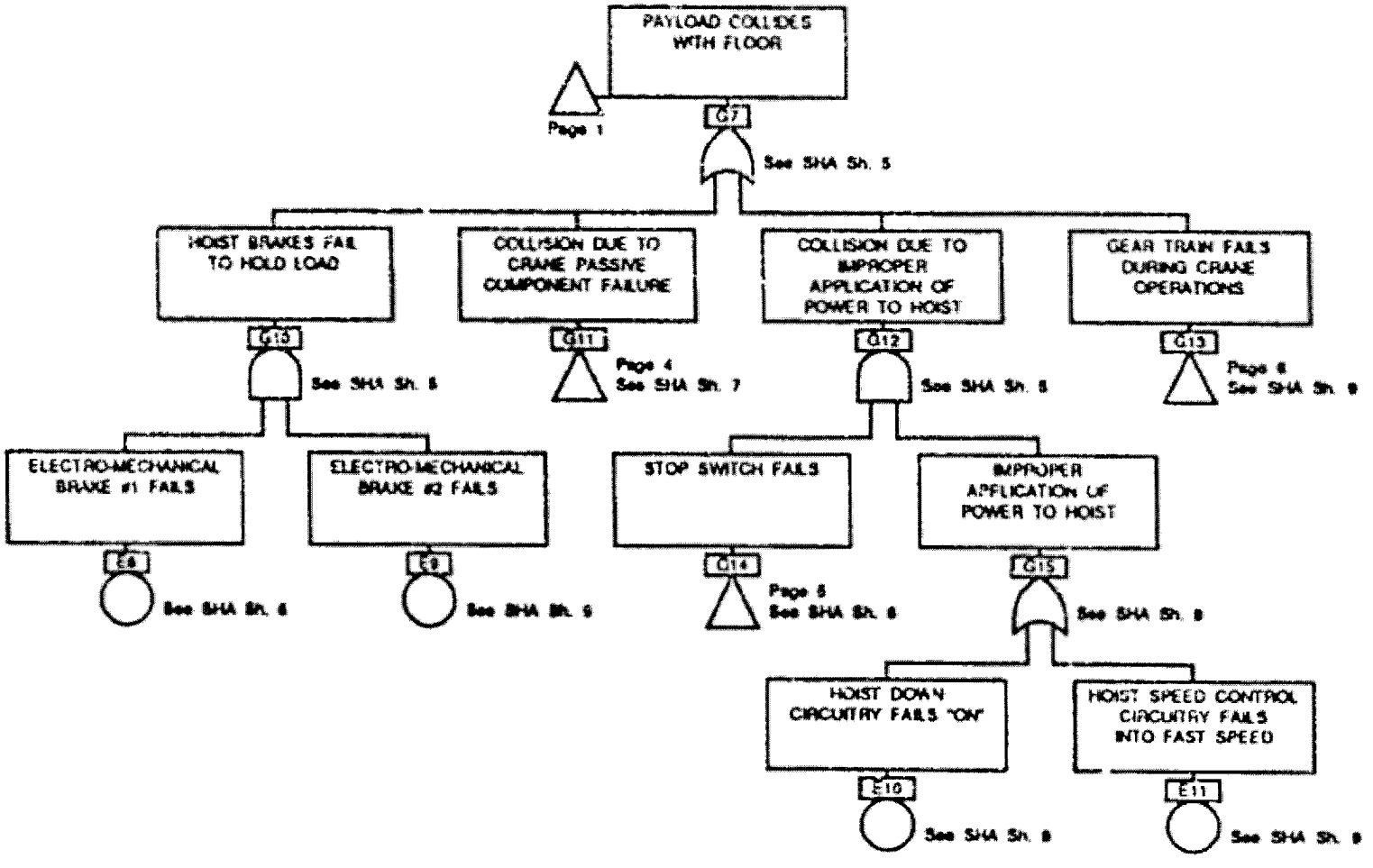
PAYLOAD COLLIDES WITH FLOOR
Page 1
G7
See SHA Sh. 5
HOIST BRAKES FAIL TO HOLD LOAD
COLLISION DUE TO CRANE PASSIVE COMPONENT FAILURE
COLLISION DUE TO IMPROPER APPLICATION OF POWER TO HOIST
GEAR TRAIN FAILS DURING CRANE OPERATIONS
G10
See SHA Sh. 5
G11
Page 4
See SHA Sh. 7
G12
See SHA Sh. 5
G13
Page 6
See SHA Sh. 9
ELECTRO-MECHANICAL BRAKE #1 FAILS
ELECTRO-MECHANICAL BRAKE #2 FAILS
STOP SWITCH FAILS
IMPROPER APPLICATION OF POWER TO HOIST
E8
See SHA Sh. 6
E9
See SHA Sh. 9
G14
Page 5
See SHA Sh. 6
G15
See SHA Sh. 8
HOIST DOWN CIRCUITRY FAILS "ON"
HOIST SPEED CONTROL CIRCUITRY FAILS INTO FAST SPEED
E10
See SHA Sh. 8
E11
See SHA Sh. 8

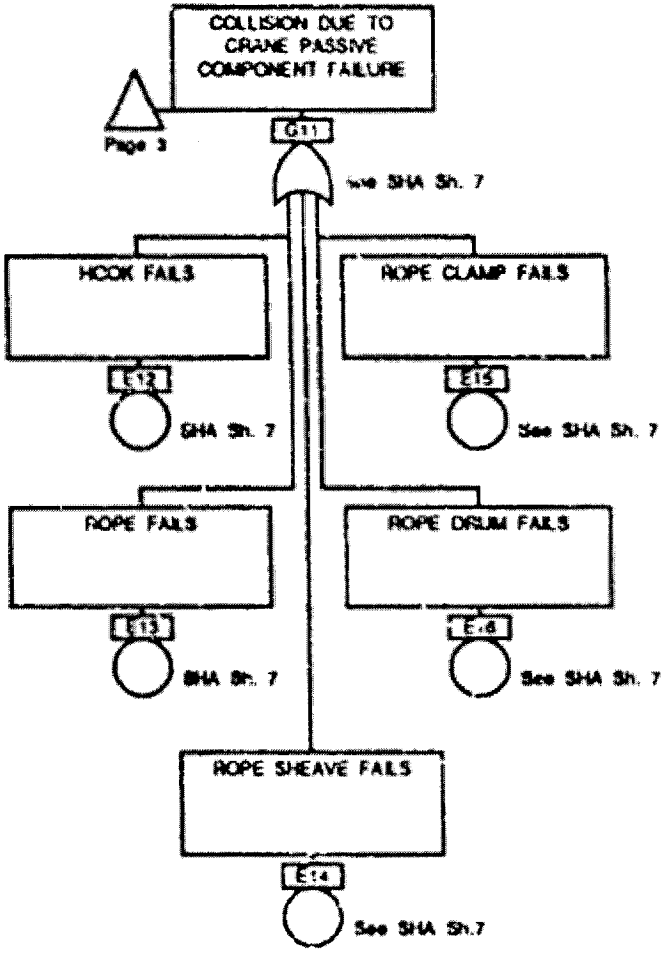
COLLISION DUE TO CRANE PASSIVE COMPONENT FAILURE
Page 3
G11
See SHA Sh. 7
HOOK FAILS
E12
SHA Sh. 7
ROPE CLAMP FAILS
E15
See SHA Sh. 7
ROPE FAILS
E13
SHA Sh. 7
ROPE DRUM FAILS
See SHA Sh. 7
ROPE SHEAVE FAILS
E14
See SHA Sh.7

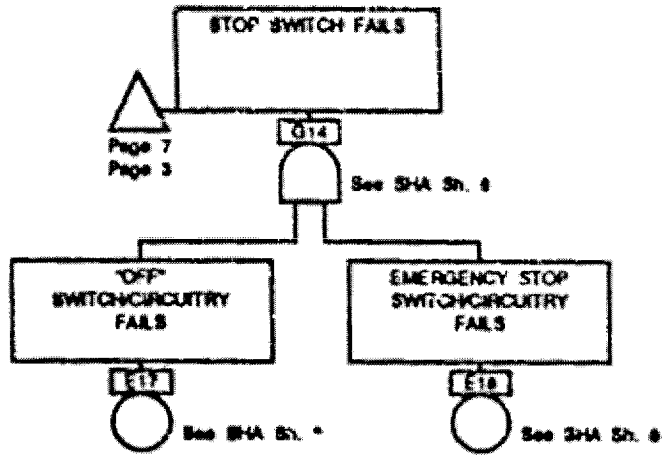
STOP SWITCH FAILS
Page 7
Page 3
G14
See SHA Sh. 8
"OFF" SWITCH/CIRCUITRY FAILS
EMERGENCY STOP SWITCH/CIRCUITRY FAILS
E17
E18
See SHA Sh. 8

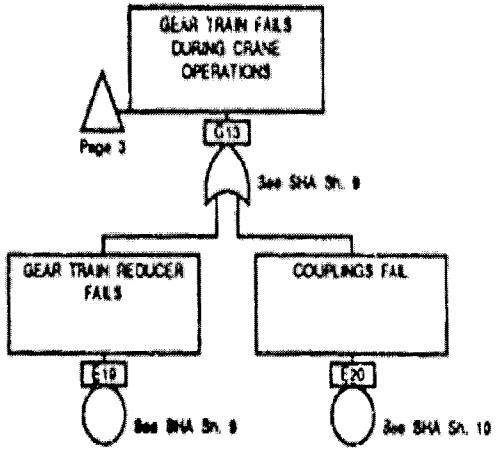
GEAR TRAIN FAILS DURING CRANE OPERATIONS
Page 3
G13
See SHA Sh. 9
GEAR TRAIN REDUCER FAILS
COUPLINGS FAIL
E19
E20
See SHA Sh. 9
See SHA Sh. 10

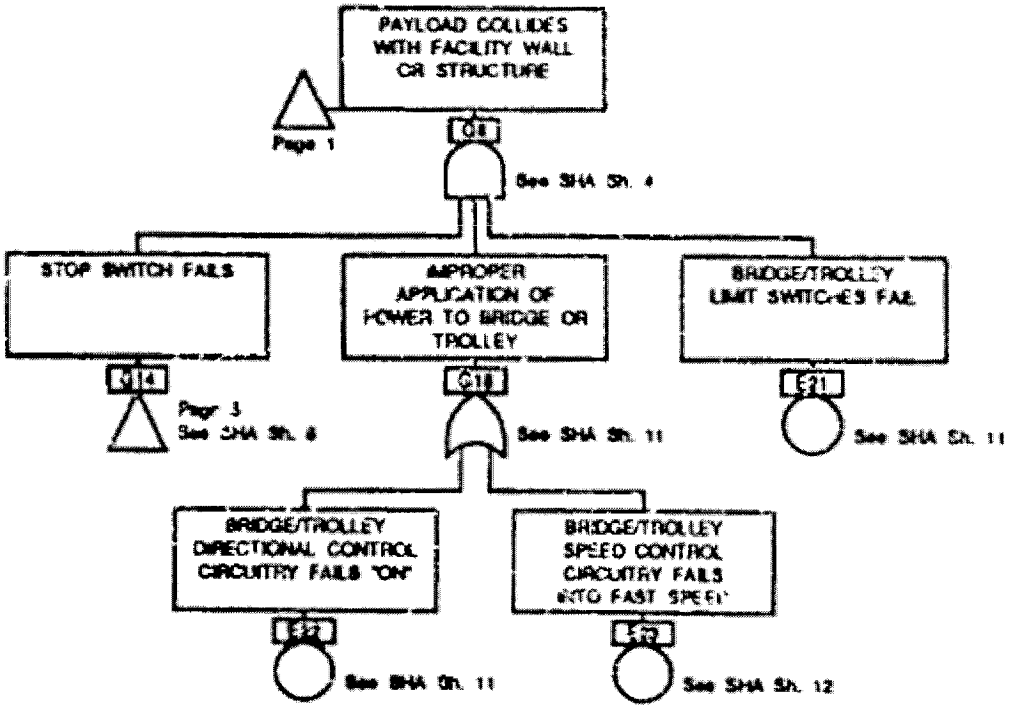
PAYLOAD COLLIDES WITH FACILITY WALL OR STRUCTURE
Page 1
See SHA Sh. 4
STOP SWITCH FAILS
IMPROPER APPLICATION OF POWER TO BRIDGE OR TROLLEY
BRIDGE/TROLLEY LIMIT SWITCHES FAIL
Page 3
See SHA Sh. 8
See SHA Sh. 11
See SHA Sh. 11
BRIDGE/TROLLEY DIRECTIONAL CONTROL CIRCUITRY FAILS "ON"
BRIDGE/TROLLEY SPEED CONTROL CIRCUITRY FAILS INTO FAST SPEED
See SHA Sh. 11
See SHA Sh. 12

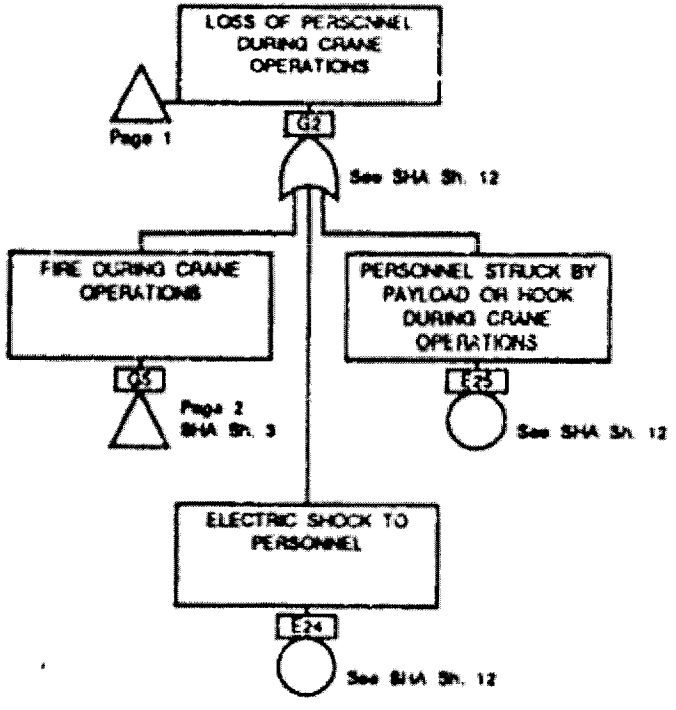
LOSS OF PERSONNEL DURING CRANE OPERATIONS
Page 1
G2
See SHA Sh. 12
FIRE DURING CRANE OPERATIONS
G5
Page 2
SHA Sh. 3
PERSONNEL STRUCK BY PAYLOAD OR HOOK DURING CRANE OPERATIONS
E25
See SHA Sh. 12
ELECTRIC SHOCK TO PERSONNEL
E24
See SHA Sh. 12

SHA NO: SAA21CSR1-001	HAZARD ANALYSIS WORKSHEET

MISSION PHASE: SPACE STATION PROCESSING
SYSTEM: 30 TON BRIDGE CRANE
EFFECTIVITY: PRE-LAUNCH PAYLOAD PROCESSING

ENGINEER: J. WYCKOFF
DATE: FEBRUARY 1993
SHEET: 1 OF 11

HAZARDOUS CONDITION	HAZARD CAUSE	HAZARD EFFECT	SEVERITY	SAFETY REQUIREMENTS	HAZARD ELIMINATION/ CONTROL PROVISIONS	LIKELIHOOD OF OCCURRENCE
(GO) – LOSS OF LIFE AND/OR FLIGHT HARDWARE	(G1) – LOSS OF FLIGHT HARDWARE DURING CRANE OPERATIONS	(GO) – LOSS OF LIFE AND/OR FLIGHT HARDWARE	Ca: LOSS OF PERSONNEL, VEHICLE OR EQUIPMENT	DEVELOPED UNDER (G1) BELOW	DEVELOPED UNDER (G1) BELOW	Ao- UNLIKELY
(GO) – LOSS OF LIFE AND/OR FLIGHT HARDWARE	(G2) – LOSS OF PERSONNEL DURING CRANE OPERATION	(GO) – LOSS OF LIFE AND/OR FLIGHT HARDWARE	Ca: LOSS OF PERSONNEL, VEHICLE OR EQUIPMENT	DEVELOPED UNDER (G2) (SHEET 12)	DEVELOPED UNDER (G2) BELOW	Ao- UNLIKELY
(G1) – LOSS OF FLIGHT HARDWARE DURING CRANE OPERATIONS DUE TO COLLISION OR FIRE	(G3) – COLLISION OR FIRE DURING CRANE OPERATION	GO) – LOSS OF LIFE AND/OR FLIGHT HARDWARE	Ca: LOSS OF PERSONNEL, VEHICLE OR EQUIPMENT	DEVELOPED UNDER (G3) BELOW	DEVELOPED UNDER (G3) BELOW	Ao- UNLIKELY
(G3) – COLLISION OR FIRE DURING CRANE OPERATIONS	(G4) – PAYLOAD COLLIDES WITH CRANE DUE TO HOIST UPPER LIMIT SWUTCHES FAILURES	(G1) – LOSS OF FLIGHT HARDWARE DURING CRANE OPERATIONS	Ca: LOSS OF PERSONNEL, VEHICLE OR EQUIPMENT	DEVELOPED UNDER (G4) BELOW	DEVELOPED UNDER (G4) BELOW	Ao- UNLIKELY
(G3) – COLLISION OR FIRE DURING CRANE OPERATIONS	(G5) – FIRE DURING CRANE OPERATIONS	(G1) – LOSS OF FLIGHT HARDWARE DURING CRANE OPERATIONS	Ca: LOSS OF PERSONNEL, VEHICLE OR EQUIPMENT	DEVELOPED UNDER (G5) (SHEET 4)	DEVELOPED UNDER (G4) BELOW	Ao- UNLIKELY
(G3) – COLLISION OR FIRE DURING CRANE OPERATIONS	(G6) – PAYLOAD COLLIDES WITH FLOOR OR STRUCTURE DURING CRANE OPERATIONS	(G1) – LOSS OF FLIGHT HARDWARE DURING CRANE OPERATIONS	Ca: LOSS OF PERSONNEL, VEHICLE OR EQUIPMENT	DEVELOPED UNDER (G4) (SHEET 4)	DEVELOPED UNDER (G6) BELOW	Ao- UNLIKELY

SHA NO: SAA21CSR1-001	HAZARD ANALYSIS WORKSHEET

MISSION PHASE: SPACE STATION PROCESSING	ENGINEER: J. WYCKOFF
SYSTEM: 30 TON BRIDGE CRANE	DATE: FEBRUARY 1993
EFFECTIVITY: PRE-LAUNCH PAYLOAD PROCESSING	SHEET: 2 OF 11

HAZARDOUS CONDITION	HAZARD CAUSE	HAZARD EFFECT	SEVERITY	SAFETY REQUIREMENTS	HAZARD ELIMINATION/ CONTROL PROVISIONS	LIKELIHOOD OF OCCURRENCE
(G4) – PAYLOAD COLLIEDS WITH CRANE DUE TO HOIST UPPER LIMIT SWITCHES FAILURES	(E3) – INITIAL UPPER LIMIT SWITCH FAILS	NO EFFECT UNLESS (E4) ALSO OCCURS	Ca: LOSS OF PERSONNEL, VEHICLE OR EQUIPMENT	NSS/GO 1740.9 PARA 201Q. REQUIRES THAT CRITICAL CRANES HAVE DUAL UPPER LIMIT SWITCHES – AN INITIAL AND A FINAL, WHICH PRECLUDE ALL CRANE MOTION	PER HARNISHFEGER DRAWING 101A16061, SHHET 3, INITIAL UPPER LIMIT SWITCH "GULS" IS A GEARED LIMIT SWITCH WHICH PREVENTS THE HOIST FROM BEING RAISED. "WULS" IS THE WEIGHTED UPPER LIMIT SWITCH WHICH TRIPS THE MAIN BREAKER	Ao- UNLIKELY
(G4) – PAYLOAD COLLIEDS WITH CRANE DUE TO HOIST UPPER LIMIT SWITCHES FAILURES	(E4) – FINAL UPPER LIMIT SWITCH FAILS	NO EFFECT UNLESS (E3) ALSO OCCURS	Ca: LOSS OF PERSONNEL, VEHICLE OR EQUIPMENT	NSS/GO 1740.9 PARA 201Q. REQUIRES THAT CRITICAL CRANES HAVE DUAL UPPER LIMIT SWITCHES – AN INITIAL AND A FINAL, WHICH PRECLUDE ALL CRANE MOTION	PER HARNISHFEGER DRAWING 101A16061, SHEET 3, INITIAL UPPER LIMIT SWITCH "GULS" IS A GEARED LIMIT SWITCH WHICH PREVENTS THE HOIST FROM BEING RAISED. "WULS" IS THE WEIGHTED UPPER LIMIT SWITCH WHICH TRIPS THE MAIN BREAKER	Ao- UNLIKELY
(G5) – FIRE DURING CRANE OPERATIONS	(G5) – FIRE DUE TO MECHANICAL FAILURE	GO) – LOSS OF LIFE AND/OR FLIGHT HARDWARE	Ca: LOSS OF PERSONNEL, VEHICLE OR EQUIPMENT	DEVELOPED UNDER (G9) (SHEET 4)	DEVELOPED UNDER (G9 BELOW	Ao- UNLIKELY
(G5) – FIRE DURING CRANE OPERATIONS	(E5) – FIRE DUE TO ELECTRICAL FAILURE	(G0) – LOSS OF LIFE AND/OR FLIGHT HARDWARE	Ca: LOSS OF PERSONNEL, VEHICLE OR EQUIPMENT	NSS/GO 1740.9 PARA 201G. REQUIRES COMPLIANCE WITH NFPA 70 (NATIONAL ELECTRIC CODE). NEMA EQUIPMENT ENCLOSURE SPECIFICATIONS AND OVERLOAD PROTECTION	PER HARNISHFEGER DRAWING 101A16061, SHEET 13, THE CRANE HAS OVERCURRENT PROYECTION AND PHASE MONITORING	Ao- UNLIKELY

SHA NO: SAA21CSR1-001	HAZARD ANALYSIS WORKSHEET

MISSION PHASE: SPACE STATION PROCESSING
SYSTEM: 30 TON BRIDGE CRANE
EFFECTIVITY: PRE-LAUNCH PAYLOAD PROCESSING

ENGINEER: J. WYCKOFF
DATE: FEBRUARY 1993
SHEET: 2 OF 11

HAZARDOUS CONDITION	HAZARD CAUSE	HAZARD EFFECT	SEVERITY	SAFETY REQUIREMENTS	HAZARD ELIMINATION/ CONTROL PROVISIONS	LIKELIHOOD OF OCCURRENCE
(G9) – FIRE DUE TO MECHANICAL FAILURE	(E6) – LACK OF LUBRICATION	(G5) – LACK OF LUBRICATION	Ca: LOSS OF PERSONNEL, VEHICLE OR EQUIPMENT	PER NASA10-04631, DESIGN SHALL PROVIDE FOR MEANS OF LUBRICATING ALL MOVING PARTS THAT REQUIRE IT FOR OPERATIONS	(a) PER HECO DRAWING D2168-MO2, THE GEAR CASE IS OIL TIGHT AND OUTFITTED FOR OIL MAINTENANCE. (b) OMMRSD TBD WILL REQUIRE LUBRICATION TO BE PERFORMENED AT REGULAR INTERVALS	Ao- UNLIKELY
(G9) – FIRE DUE TO MECHANICAL FAILURE	(E7) – BRAKE SEIZES	(G5) – FIRE DURING CRANE OPERATIONS	Ca: LOSS OF PERSONNEL, VEHICLE OR EQUIPMENT	PER NASA10-04631, THE BRAKES SHALL HAVE THE THERMAL CAPACITY FOR FREQUENCY OF OPERATION REQUIRED BY SERVICE	HECO DRAWING D2168-MO1, THE HOIST IS EQUIPPED WITH TWO P&H TYPE SBE-10 MAGNETIC SHOE BRAKES, WHICH ARE RATED AT 150% OF THE HOISTS RATED LOAD	Ao- UNLIKELY
(G6) – PAYLOAD COLLIEDS WITH FLOOR OR STRUCRURE DURING CRANE OPERATIONS	(G7) – PAYLOAD COLLIDES WITH FLOOR	(G1) – LOSS OF FLIGHT HARDWARE DURING CRANE OPERATIONS	Ca: LOSS OF PERSONNEL, VEHICLE OR EQUIPMENT	DEVELOPED UNDER (G7) BELOW (SHEET 5)	DEVELOPED UNDER (G7) BELOW	Ao- UNLIKELY
(G6) – PAYLOAD COLLIEDS WITH FLOOR OR STRUCRURE DURING CRANE OPERATIONS	(G8) – PAYLOAD COLLIDES WITH FLACILITY WALL OR STRUCTURE	(G1) – LOSS OF FLIGHT HARDWARE DURING CRANE OPERATIONS	Ca: LOSS OF PERSONNEL, VEHICLE OR EQUIPMENT	DEVELOPED UNDER (G8) BELOW (SHEET 10)	DEVELOPED UNDER (G7) BELOW	Ao- UNLIKELY

SHA NO: SAA21CSR1-001

HAZARD ANALYSIS WORKSHEET

MISSION PHASE: SPACE STATION PROCESSING
SYSTEM: 30 TON BRIDGE CRANE
EFFECTIVITY: PRE-LAUNCH PAYLOAD PROCESSING

ENGINEER: J. WYCKOFF
DATE: FEBRUARY 1993
SHEET: 1 OF 11

HAZARDOUS CONDITION	HAZARD CAUSE	HAZARD EFFECT	SEVERITY	SAFETY REQUIREMENTS	HAZARD ELIMINATION/ CONTROL PROVISIONS	LIKELIHOOD OF OCCURRENCE
(G7) – PAYLOAD COLLIEDS WITH FLOOR	(G10) – HOIST BRAKES FAIL TO HOLD LOAD	(G1) – LOSS OF FLIGHT HARDWARE DURING CRANE OPERATIONS	Ca: LOSS OF PERSONNEL, VEHICLE OR EQUIPMENT	DEVELOPED UNDER (G10) BELOW (SHEETS 6)	DEVELOPED UNDER (G10) BELOW	Ao- UNLIKELY
(G7) – PAYLOAD COLLIEDS WITH FLOOR	(G11) – COLLISION DUE TO CRANE PASSIVE COMPONENT FAILURE	(G1) – LOSS OF FLIGHT HARDWARE DURING CRANE OPERATIONS	Ca: LOSS OF PERSONNEL, VEHICLE OR EQUIPMENT	DEVELOPED UNDER (G11) BELOW (SHEETS 7)	DEVELOPED UNDER (G11) BELOW	Ao- UNLIKELY
(G7) – LOSS OF LIFE AND/OR FLIGHT HARDWARE	(G2) – LOSS OF PERSONNEL DURING CRANE OPERATION	(GO) – LOSS OF LIFE AND/OR FLIGHT HARDWARE	Ca: LOSS OF PERSONNEL, VEHICLE OR EQUIPMENT	DEVELOPED UNDER (G2) (SHEET 12)	DEVELOPED UNDER (G2) BELOW	Ao- UNLIKELY
(G7) – PAYLOAD COLLIEDS WITH FLOOR	(G12) – COLLISION DUE TO IMPROPE APPLICATION OF POWER TO HOIST	(G1) – LOSS OF FLIGHT HARDWARE DURING CRANE OPERATIONS	Ca: LOSS OF PERSONNEL, VEHICLE OR EQUIPMENT	DEVELOPED UNDER (G12) BELOW (SHEETS 8)	DEVELOPED UNDER (G12) BELOW	Ao- UNLIKELY
(G7) – PAYLOAD COLLIEDS WITH FLOOR	(G13) – GEAR TRAIN FAILS DURING CRANE OPERATIONS	(G1) – LOSS OF FLIGHT HARDWARE DURING CRANE OPERATIONS	Ca: LOSS OF PERSONNEL, VEHICLE OR EQUIPMENT	DEVELOPED UNDER (G13) BELOW (SHEETS 13)	DEVELOPED UNDER (G13) BELOW	Ao- UNLIKELY
(G10) – HOIST BRAKES FAILS TO HOLD LOAD	(E8) – ELECTRO-MECHANICAL BRAKE #1 FAILS	NO EFFECT WITHOUT OCCURANCE OF (E9) IN CONJUCTION	Ca: LOSS OF PERSONNEL, VEHICLE OR EQUIPMENT	NSS/GO 1740.9 PARA 201F. REQUIRES THAT HOISTS HAVE TWO MEANS OF BRAKING, EACH OF WHICH CAN HOLD THE RATED LOAD	HECO DRAWING D2168-MO1, THE HOIST HAS TWO BRAKES, EACH OF WHICH IS CAPABLE OF STOPPING 150% OF RATED LOAD	Ao- UNLIKELY
(G10) – HOIST BRAKES FAILS TO HOLD LOAD	(E8) – ELECTRO-MECHANICAL BRAKE #2 FAILS	NO EFFECT WITHOUT OCCURANCE OF (E8) IN CONJUCTION	Ca: LOSS OF PERSONNEL, VEHICLE OR EQUIPMENT	NSS/GO 1740.9 PARA 201F. REQUIRES THAT HOISTS HAVE TWO MEANS OF BRAKING, EACH OF WHICH CAN HOLD THE RATED LOAD	HECO DRAWING D2168-MO1, THE HOIST HAS TWO BRAKES, EACH OF WHICH IS CAPABLE OF STOPPING 150% OF RATED LOAD	Ao- UNLIKELY

SHA NO: SAA21CSR1-001	HAZARD ANALYSIS WORKSHEET

MISSION PHASE: SPACE STATION PROCESSING **SYSTEM:** 30 TON BRIDGE CRANE **EFFECTIVITY:** PRE-LAUNCH PAYLOAD PROCESSING	**ENGINEER:** J. WYCKOFF **DATE:** FEBRUARY 1993 **SHEET:** 1 OF 11

HAZARDOUS CONDITION	HAZARD CAUSE	HAZARD EFFECT	SEVERITY	SAFETY REQUIREMENTS	HAZARD ELIMINATION/ CONTROL PROVISIONS	LIKELIHOOD OF OCCURRENCE
(G11) – OLLISION DUE TO CRANE PASSIVE COMPONENT FAILURE	(E12) – HOOK FAILS (E13) – ROPE FAILS (E14) – ROPE SHEAVE FAILS (E15) – ROPE CLAMP FAILS (E16) – ROPE DRUM FAILS	(G1) – LOSS OF FLIGHT HARDWARE DURING CRANE OPERATIONS	Ca: LOSS OF PERSONNEL, VEHICLE OR EQUIPMENT	(E12) – NSS/GO 1740.9 PARA 201F. REQUIRES MONTHLY INSPECTIONS OF HOOKS FOR DEFORMATION OR CRACKS, AND AN ANNUAL NONDESTRUCTIVE EVALUATION, (E13) – NSS/GO 1740.9 PARA 201F. REQUIRES MONTHLY INSPECTIONS OF WIRE ROPE (E14) – NSS/GO 1740.9 PARA 201F. REQUIRES FORMAL PERIODIC INSPECTION FOR CRACKED OR WORN SHEAVES (E15) – NSS/GO 1740.9 PARA 201F. REQUIRES ROPE ENDS TO BE ANCHORED SECURELY BY A CLAMP AND THE DRUM HAVE NO LESS THAN TWO FULL WRAPS WHEN THE HOOK IS AT ITS LOWEST POINT (E16) – NSS/GO 1740.9 PARA 201F. REQUIRES PERIODIC INSPECTION FOR CRACKED OR WORN DRUMS	OMRSD TBD WILL SPECIFY PROPER PROOF TESTING AND MAINTENANCE	Ao- UNLIKELY
(G12) – COLLISION DUE TO IMPROPER APPLICATION OF POWER TO HOIST	(G14) – STOP SWITCH FAILS	(G1) – LOSS OF FLIGHT HARDWARE DURING CRANE OPERATIONS	Ca: LOSS OF PERSONNEL, VEHICLE OR EQUIPMENT	DEVELOPED UNDER (G14) BELOW (SHEETS 8)	DEVELOPED UNDER (G14) BELOW	Ao- UNLIKELY

SHA NO: SAA21CSR1-001	HAZARD ANALYSIS WORKSHEET

MISSION PHASE: SPACE STATION PROCESSING
SYSTEM: 30 TON BRIDGE CRANE
EFFECTIVITY: PRE-LAUNCH PAYLOAD PROCESSING

ENGINEER: J. WYCKOFF
DATE: FEBRUARY 1993
SHEET: 1 OF 11

HAZARDOUS CONDITION	HAZARD CAUSE	HAZARD EFFECT	SEVERITY	SAFETY REQUIREMENTS	HAZARD ELIMINATION/ CONTROL PROVISIONS	LIKELIHOOD OF OCCURRENCE
(G12) – COLLISION DUE TO IMPROPER APPLICATION OF POWER TO HOIST	(G15) – IMPROPER APPLICATION OF POWER TO HOIST	(G1) – LOSS OF FLIGHT HARDWARE DURING CRANE OPERATIONS	Ca: LOSS OF PERSONNEL, VEHICLE OR EQUIPMENT	DEVELOPED UNDER (G15) BELOW (SHEETS 8)	DEVELOPED UNDER (G15) BELOW	Ao- UNLIKELY
(G14) – STOP SWITCH FAILS	(E17) – "OFF" SWITCH/CIRCUIT RY FAILS	NO EFFECT WITHOUT OCCURANCE OF (G15) AND (G18) IN CONJUCTION	Ca: LOSS OF PERSONNEL, VEHICLE OR EQUIPMENT	NSS/GO 1740.9 PARA 201G. REQUIRES THAT CONTROL STATIONS HAVE STOP PUSH-BUTTONS THAT OPERATES MAINLINE CONTACTORS	PER HARNISHFEGER DRAWING 101A16061, SHEET 3, THE CONTROL CAB HAS A BUTTON LABELED "OFF" WHICH OPENS THE MAINLINE CONTACTOR	Ao- UNLIKELY
(G14) – STOP SWITCH FAILS	(E17) – "OFF" SWITCH/CIRCUIT RY FAILS	NO EFFECT WITHOUT OCCURANCE OF (G15) AND (G17) IN CONJUCTION	Ca: LOSS OF PERSONNEL, VEHICLE OR EQUIPMENT	NSS/GO 1740.9 PARA 201G. REQUIRES A RED EMERGENCY STOP BUTTON THAT OPERATES THE MAINLINE CONTACTOR AND/OR MAIN CIRCUIT BREAKER	PER HARNISHFEGER DRAWING 101A16061, SHEET 3, THE EMERGENCY STOP ACTIVATES BOTH MAIN CIRCUIT BREAKER AND MAIN LINE CONTACTOR	Ao- UNLIKELY
(G15) – IMPROPER APPLICATION OF POWER TO HOIST	(E10) – HOIST DOWN CIRCUITRY FAILS "ON"	NO EFFECT WITHOUT OCCURANCE OF (G17 AND (G18) IN CONJUCTION	Ca: LOSS OF PERSONNEL, VEHICLE OR EQUIPMENT	NSS/GO 1740.9 PARA 201G. REQUIRES THAT THE ELECTRICAL SYSTEM BE FAIL-SAFE	REQUIREMENT MET BY DESIGN – PER HARNISHFEGER DRAWING 101A16061, SHEET 3, AT LEAST THREE INDEPENDENT FAILURES ARE NECESSARY FOR A HAZARD TO OCCUR	Ao- UNLIKELY

SHA NO: SAA21CSR1-001	HAZARD ANALYSIS WORKSHEET

MISSION PHASE: SPACE STATION PROCESSING
SYSTEM: 30 TON BRIDGE CRANE
EFFECTIVITY: PRE-LAUNCH PAYLOAD PROCESSING

ENGINEER: J. WYCKOFF
DATE: FEBRUARY 1993
SHEET: 1 OF 11

HAZARDOUS CONDITION	HAZARD CAUSE	HAZARD EFFECT	SEVERITY	SAFETY REQUIREMENTS	HAZARD ELIMINATION/ CONTROL PROVISIONS	LIKELIHOOD OF OCCURRENCE
(G15) – IMPROPER APPLICATION OF POWER TO HOIST	(E11 – HOIST DOWN CIRCUITRY FAILS "ON"	NO EFFECT WITHOUT OCCURANCE OF (G17 AND (G18) IN CONJUCTION	Ca: LOSS OF PERSONNEL, VEHICLE OR EQUIPMENT	NSS/GO 1740.9 PARA 201G. REQUIRES THAT THE ELECTRICAL SYSTEM BE FAIL-SAFE	REQUIREMENT MET BY DESIGN – PER HARNISHFEGER DRAWING 101A16061, SHEET 3, AT LEAST THREE INDEPENDENT FAILURES ARE NECESSARY FOR A HAZARD TO OCCUR	Ao- UNLIKELY
(G13) – GEAR TRAIN FAILS DURING CRANE OPERATIONSSTO P SWITCH FAILS	(E19) – COUPLINGS FAIL	(G1) – LOSS OF FLIGHT HARDWARE DURING CRANE OPERATIONS	Ca: LOSS OF PERSONNEL, VEHICLE OR EQUIPMENT	NSS/GO 1740.9 PARA 201F. (3) STATES THAT GEARING SHOULD BE ENCLOSED, SUCH THAT COMPONENET FAILURE WILL INCREASE THE PROBABILITY OF MAINTAINING THE MESH BETWEEN GEARS	PER HECO DRAWING D-2168-AO1 THE GEARS ARE SHOWN TO BE ENCLOSED, IN ADDITION, THE GEARS ARE REDUNDANT, EACH ONE BEING CAPABLE OF SUPPORTING THE LOAD	Ao- UNLIKELY
(G13) – GEAR TRAIN FAILS DURING CRANE OPERATIONSSTO P SWITCH FAILS	(E20– GEAR REDUCERS FAIL	(G1) – LOSS OF FLIGHT HARDWARE DURING CRANE OPERATIONS	Ca: LOSS OF PERSONNEL, VEHICLE OR EQUIPMENT	(E12) – NSS/GO 1740.9 PARA 201F. (3) LISTS THE DESIGN REQUIREMENTS FOR COUPLINGS	PER HECO DRAWING D-2168-AO1 THE COUPLING MEET REQUIREMENTS, AND ARE REDUNDANT, SO THAT FAILURE OF ONE IS NOT	Ao- UNLIKELY
(G8 – PAYLOAD COLLIDES WITH FACILITY WALL OR STRUCTURE	(G14) – STOP SWITCH FAILS	(G1) – LOSS OF FLIGHT HARDWARE DURING CRANE OPERATIONS	Ca: LOSS OF PERSONNEL, VEHICLE OR EQUIPMENT	DEVELOPED UNDER (G14) ABOVE (PAGE 8)	DEVELOPED UNDER (G14) ABOVE (PAGE 8)	Ao- UNLIKELY
(G8 – PAYLOAD COLLIDES WITH FACILITY WALL OR STRUCTURE	(G16) – IMPROPER APPLICATION OF POWER TO BRIDGE TROLLEY	(G1) – LOSS OF FLIGHT HARDWARE DURING CRANE OPERATIONS	Ca: LOSS OF PERSONNEL, VEHICLE OR EQUIPMENT	DEVELOPED UNDER (G16 ABOVE (SHEET 11)	DEVELOPED UNDER (G16) BELOW	Ao- UNLIKELY

SHA NO: SAA21CSR1-001	HAZARD ANALYSIS WORKSHEET

MISSION PHASE: SPACE STATION PROCESSING **SYSTEM:** 30 TON BRIDGE CRANE **EFFECTIVITY:** PRE-LAUNCH PAYLOAD PROCESSING	**ENGINEER:** J. WYCKOFF **DATE:** FEBRUARY 1993 **SHEET:** 1 OF 11

HAZARDOUS CONDITION	HAZARD CAUSE	HAZARD EFFECT	SEVERITY	SAFETY REQUIREMENTS	HAZARD ELIMINATION/ CONTROL PROVISIONS	LIKELIHOOD OF OCCURRENCE
(G8) – PAYLOAD COLLIDES WITH FACILITY WALL OR STRUCTURE	(E21) – BRIDGE/ TROLLEY LIMIT SWITCH FAILS	(G1) – LOSS OF FLIGHT HARDWARE DURING CRANE OPERATIONS	Ca: LOSS OF PERSONNEL, VEHICLE OR EQUIPMENT	NSS/GO 1740.9 PARA 201G. (6) REQUIRES THAT THE CRITICAL CRANES CONTAIN LIMIT SWITCHES FOR BOTH THE BRIDGE/TROLLEY	PER HARNISHFEGER DRAWING 101A16061, SHEET 13, THE TROLLEY/ BRIDGE HAS BOTH INITIAL AND FINAL SWITCHES. THE INITIAL LIMIT SWITCH SWITCHES BRIDGE/ TROLLEY FROM FAST TO SLOW SPEED. THE FINAL LIMIT SWITCH STOPS ALL BRIDGE/TROLLEY MOTION IN THE EFFECTED DIRECTION	Ao- UNLIKELY
(G16) – IMPROPER APPLICATION OF POWER TO BRIDGE OR TROLLEY	(E22) – BRIDGE/ TROLLEY DIRECTIONAL CONTROL CIRCUITRY FAILS "ON"	(G8) – PAYLOAD COLLIDES WITH WALL	Ca: LOSS OF PERSONNEL, VEHICLE OR EQUIPMENT	NSS/GO 1740.9 PARA 201F. (6) REQUIRES THAT THE ELECTRICAL CIRCUITRY BE FAIL-SAFE, SO THAT THE FAILURE OF ANY COMPONENET WILL NOT CAUSE THE CRANE TO OPERATE IN A SPEED RANGE FASTER THAN COMMANDED. ANY OPERATION IN THE ABSENCE OF A COMMAND WOULD VIOLATE THIS	PER HARNISHFEGER DRAWING 101A16061, SHEET 13, THE TROLLEY/ BRIDGE HAS BOTH INITIAL AND FINAL SWITCHES. THE INITIAL LIMIT SWITCH SWITCHES BRIDGE/ TROLLEY FROM FAST TO SLOW SPEED. THE FINAL LIMIT SWITCH STOPS ALL BRIDGE/TROLLEY MOTION IN THE EFFECTED DIRECTION	Ao- UNLIKELY

SHA NO: SAA21CSR1-001	HAZARD ANALYSIS WORKSHEET

MISSION PHASE: SPACE STATION PROCESSING	**ENGINEER:** J. WYCKOFF
SYSTEM: 30 TON BRIDGE CRANE	**DATE:** FEBRUARY 1993
EFFECTIVITY: PRE-LAUNCH PAYLOAD PROCESSING	**SHEET:** 1 OF 11

HAZARDOUS CONDITION	HAZARD CAUSE	HAZARD EFFECT	SEVERITY	SAFETY REQUIREMENTS	HAZARD ELIMINATION/ CONTROL PROVISIONS	LIKELIHOOD OF OCCURRENCE
(G16) – IMPROPER APPLICATION OF POWER TO BRIDGE OR TROLLEY	(E23) – BRIDGE/ TROLLEY DIRECTIONAL CONTROL CIRCUITRY FAILS INTO FAST SPEED	(G8) – PAYLOAD COLLIDES WITH WALL	Ca: LOSS OF PERSONNEL, VEHICLE OR EQUIPMENT	NSS/GO 1740.9 PARA 201F. (6) REQUIRES THAT THE ELECTRICAL CIRCUITRY BE FAIL-SAFE, SO THAT THE FAILURE OF ANY COMPONENET WILL NOT CAUSE THE CRANE TO OPERATE IN A SPEED RANGE FASTER THAN COMMANDED. ANY OPERATION IN THE ABSENCE OF A COMMAND WOULD VIOLATE THIS	PER HARNISHFEGER DRAWING 101A16061, SHEET 13, THE TROLLEY/ BRIDGE HAS BOTH INITIAL AND FINAL SWITCHES. THE INITIAL LIMIT SWITCH SWITCHES BRIDGE/ TROLLEY FROM FAST TO SLOW SPEED. THE FINAL LIMIT SWITCH STOPS ALL BRIDGE/TROLLEY MOTION IN THE EFFECTED DIRECTION	Ao- UNLIKELY
(G2) – LOSS OF PERSONNEL DURING CRANE OPERATIONS	(G5) – FIRE DURING CRANE OPERATIONS	(G0) – LOSS OF LIFE AND/OR FLIGHT HARDWARE	Ca: LOSS OF PERSONNEL, VEHICLE OR EQUIPMENT	SEE (G5) (G9) ABOVE (SHEET 4 AND 5)	SEE (G5) (G9) ABOVE (SHEET 4 AND 5)	Ao- UNLIKELY
(G2) – LOSS OF PERSONNEL DURING CRANE OPERATIONS	(E25) – PERSONNEL STRUCK BY PAYLOAD OR HOOK DURING CRANE OPERATIONS	(G0) – LOSS OF LIFE AND/OR FLIGHT HARDWARE	Ca: LOSS OF PERSONNEL, VEHICLE OR EQUIPMENT	NSS/GO 1740.9 PARA 206 DEFINES REQUIREMENTS FOR CRANE OPERATIONS, INCLUDING THE ESTABLISHMENT OF SAFETY ZONES	OMRSD TBD WILL ESTABLISH PROPER PROCEDURES FOR CRANE OPERATIONS. OMI TBD WILL IMPLEMENT REQUIRED CRANE OPERATION PROCEDURES	Ao- UNLIKELY
(G2) – LOSS OF PERSONNEL DURING CRANE OPERATIONS	(E24) – ELECTRIC SHOCK TO PERSONNEL	(G0) – LOSS OF LIFE AND/OR FLIGHT HARDWARE	Ca: LOSS OF PERSONNEL, VEHICLE OR EQUIPMENT	NSS/GO 1740.9 PARA 201 G., REQUIRES THAT ELECTRICAL PORTIONS OF THE CRANE ARE DESIGNED IN ACCORDANCE WITH NFPA 70, AND CFR 29 SUBPART S, 1910.303-.399	PER HECO DRAWINGS, ELECTRICAL PARTS ARE ENCLOSED, AND A MEANS OF DISCONNECT COMPLY WITH THE STANDARDS. PER HECO DRAWINGS, CRANE SYSTEM IS GROUNDED TO FACILITY GROUND	Ao- UNLIKELY

RISK INDEX MATRIX

. Likelihood of Occurrence – The probability the hazard will occur, considering the in- place hazard controls. Likelihood of occurrence will be categorized as follows:

Description	Category	Mishap Definition
Probable	A	Expected to happen in the life of the program.
Infrequent	B	Could happen in the life of the program. Controls have significant limitations
Remote	C	Could happen in the life of the program. Controls have minor limitations or uncertainties
Improbable	D	Extremely remote possibility that it will happen in the life of the program. Strong controls are in place.

Risk Index Classification

LIKELIHOOD OF OCCURANCE	SEVERITY		
	III MARGINAL	II CRITICAL	I CATASTROPHIC
A. PROBABLE	IIIA	IIA	IA
B. INFREQUENT	IIIB	IIB	IB
C. REMOTE	IIIC	IIC	IC
D. IMPROBABLE	IIID	IID	ID

SECTION VII
CONTROL LOGIG ANALYSIS

There are no TCMS control/monitor functions associated with this system. No control logic analysis is therefore required.

SECTION VIII
EMERGENCY SAFING ANALYSIS

This system contains an emergency stop circuit, for further information reference electrical FMEA.

SECTION IX
CONTROL LOGIG ANALYSIS

Per KHB 5310.9, Appendix H, the methodology for the control of sneak circuits is not formally implemented in the design of this equipment. No sneak circuit analysis is therefore required.

SECTION X
END TO END ANALYSIS

The system interfaces with the following systems:

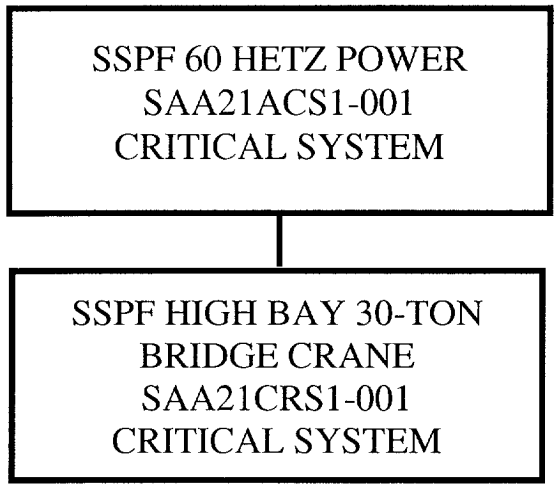

SECTION XI
AREAS OF CONCERN AND RECOMMENDATIONS

11.1 AREAS OF CONCERN

There are no areas of concern.

11.2 RECOMMNEDATIONS

There are no recommendations.