SAA09FY120-001
Rev. A
March 2001

SYSTEM ASSURANCE ANALYSIS

OF THE

325 TON BRIDGE CRANES

AT THE

VEHICLE ASSEMBLY BUILDING

HIGH BAYS 1,2,3,4

Baseline No.: 389.00

PMN: H72-1200-01
H72-1200-02
H72-1200-01A
H72-1200-02A

United Space Alliance

GROUND OPERATIONS

Revision Log

Rev.	Description	Date
New	Basic issue	07/21/95
A	Revise to reflect as built changes to drawing number EB-2508. Converted entire SAA to MS Word format. Incorporated EO1 and E02.	3/30/01

Prepared By: 3/20/01
S. Dunahoo, USA 54530
Mission Assurance Engineer

Concurrence: 3/22/01
J. Melton, USA 56220
System Design Engineer

Concurrence: 3/22/01
J. Barnette, USA 54530
First Line Manager,
Reliability Engineering

Concurrence: 3/20/01
N. Lancaster, USA 56810
Systems Engineer

Approval: 3/23/01
R. Harvey, USA 54500
Manager,
Mission Assurance Engineering

TABLE OF CONTENTS

1 SYSTEM ASSURANCE ANALYSIS SUMMARY 6

1.1 FINDINGS 6
1.2 AREAS OF CONCERN 6

2 SYSTEM DESCRIPTION 6

2.1 Mechanical 6
2.1.1 BRIDGE 6
2.1.1.1 Electronic Motor Controllers 7
2.1.1.2 Dual Controllers 7
2.1.2 Trolley 7
2.1.2.1 Electronic Motor Controllers 7
2.1.2.2 Dual Controllers 7
2.1.3 Main Hoist Assembly 7
2.1.3.1 Electronic Motor Controllers 7
2.1.3.2 Dual Controllers 8
2.1.3.3 Monitoring 8
2.1.4 Auxiliary Hoist Assembly 8
2.1.4.1 Electronic Motor Controllers 8
2.1.4.2 Dual Controllers 8
2.1.4.3 Monitoring 8
2.1.5 Hook Rotation 9
2.2 Electrical 9
2.2.1 Cabling 9
2.2.2 Control Cab 9
2.2.3 Computer Controller 9
2.2.3.1 PLC 9
2.2.3.2 DELTA TAU 9
2.2.3.3 Anti-Skewing 9
2.2.3.4 Weighing Systems 10
2.2.3.5 Position Displays 10
2.2.3.6 Automated Crane Functions 10

3 ANALYSIS GROUNDRULES 20

4 FAILURE MODES AND EFFECTS ANALYSIS 21

4.1 CRITICALITY ASSESSMENT 21
4.2 FMEA WORKSHEETS 27
4.3 LPS CONTROL / MONITOR REVIEW 610

5 HAZARD ANALYSIS 610

6 SOFTWARE RELIABILITY ANALYSIS (SWRA) 621

6.1 GENERAL 621
6.1.1 DEFINITIONS 621
6.1.2 SCOPE 622
6.1.3 GROUNDRULES 622
6.2 SOFTWARE DESCRIPTION 622
6.2.1 Program Execution 622
6.2.2 Watchdog Timer 623
6.2.3 Program Function 623
6.3 SOFTWARE TESTING 623

6.3.1 Test Bed 623
6.3.2 No Load Test (Pre-Delivery) 623
6.3.3 Acceptance Test (On Site) 624
6.4 SOFTWARE LOGIC DESCRIPTION 624
6.5 SOFTWARE CRITICALITY 624

Appendix A. CRITICAL ITEMS LIST SHEETS A-1

Appendix B. HAZARD REPORTS B-1

LIST OF ILLUSTRATIONS

Figure 1. 325 Ton Bridge Crane, VAB High Bay 4 11
Figure 2. Bridge Drive Assembly 12
Figure 3. Trolley Drive Assembly 13
Figure 4. Main Hoist Assembly 14
Figure 5. Auxilary Hoist Assembly 15
Figure 6. 325 Ton Crane Control Panel 16
Figure 7. Hoist Operator Interface Terminal 17
Figure 8. Controller Logic Flow Diagram 18
Figure 9. Main Hoist Position Display 19
Figure 10. Systems Functions Block diagram of the 325 Ton Bridge Crane 22
Figure 11. System Functions Block Diagram of the Tension Monitor 23
Figure 12. Main Hoist Mechanical FMEA Diagram 28
Figure 13. Main Hoist Levelwind Mechanical FMEA Diagram 32
Figure 14. Main Hoist Limit Switch / Overspeed FMEA Diagram 34
Figure 15. Main Hoist Hook Rotation FMEA Diagram 37
Figure 16. Auxilary Hoist Mechanical FMEA Diagram 40
Figure 17. Auxilary Hoist Levelwind Mechanical FMEA Diagram 44
Figure 18. Auxilary Hoist limit Switch / Overspeed Mechanical FMEA Diagram 47
Figure 19. Auxilary Hoist Hook Rotation FMEA Diagram 50
Figure 20. Trolley Mechanical FMEA Diagram (North and South Drives) 53
Figure 21. Bridge Mechanical FMEA Diagram (NorthEast and Northwest Drives) 56
Figure 22. Cable Reel Mechanical FMEA Diagram 58
Figure 23. PLC Configuration Diagram 103
Figure 24. 325 Ton Bridge Cranes at the Vehicle Assembly Building High Bays 1/2/3/4 Fault Tree . 611
Figure 25. PLC Program Subroutine Structure 626

LIST OF TABLES

Table 1. Findings Summary 6
Table 2. Criticality Assessment Worksheet - H72-1200-01, -02 24
Table 3. Criticality Assessment Worksheet - H72-1200-01A, -02A 26
Table 4. Mechanical FMEA - Main Hoist Assembly 29
Table 5. Mechanical FMEA - Main Hoist Levelwind Assembly 33
Table 6. Mechanical FMEA - Main Hoist Limit Switch / Overspeed Assembly 35
Table 7. Mechanical FMEA - Main Hoist Hook Rotation 38
Table 8. Mechanical FMEA - Auxiliary Hoist Assembly 41
Table 9. Mechanical FMEA - Auxiliary Hoist Levelwind Assembly 45
Table 10. Mechanical FMEA - Auxiliary Hoist Limit Switch / Overspeed Assembly 48
Table 11. Mechanical FMEA - Auxiliary Hoist Hook Rotation 51
Table 12. Mechanical FMEA - Trolley Assembly 54
Table 13. Mechanical FMEA - Bridge Assembly 57
Table 14. Mechanical FMEA – Main and Auxilary Hoist Cable Reel Assembly 59

Table 15. Electrical FMEA - Main Power 61
Table 16. Electrical FMEA - PLC Primary Mode 104
Table 17. Electrical FMEA - PLC Backup Mode 136
Table 18. Electrical FMEA - Main Hoist Primary Mode 141
Table 19. Electrical FMEA - Main Hoist Backup Mode 279
Table 20. Electrical FMEA - Auxiliary Hoist Primary Mode 321
Table 21. Electrical FMEA - Auxiliary Hoist Backup Mode 431
Table 22. Electrical FMEA - Trolley 470
Table 23. Electrical FMEA - Bridge Primary Mode 524
Table 24. Electrical FMEA - Bridge Backup Mode 608
Table 25. Hazard Analysis Worksheet - 325 Ton Cranes 616
Table 26. SWRA - 325 Ton Bridge Crane 627

1 SYSTEM ASSURANCE ANALYSIS SUMMARY

1.1 FINDINGS

Table 1. **Findings Summary**

	Assessment
Reliability Criticality	Critical
Safety Criticality	Critical

	Type	Quantity
Critical Items	1	2
	1S	-
	2	12
1R Non-CIL Items	1R	48
Critical Flexhoses	1S	-
	2	-
Critical Orifices	1S	-
	2	-
Critical Filters	1S	-
	2	-
Hazard Reports	Accepted Risk	2
	Controlled	1

1.2 AREAS OF CONCERN

There were no Areas of Concern identified with this system.

2 SYSTEM DESCRIPTION

The 325 Ton Bridge Cranes (2) in the Vehicle Assembly Building (VAB) High Bays 1/2 and 3/4 are used to raise or lower and provide lateral East / West or North / South movement of Space Shuttle vehicle components (Orbiter, External Tank, Solid Rocket Motor segments) and Ground Support Equipment (see Figure 1). Each of the two 325 Ton cranes, built by Ederer Cranes, is a double girder, double rail bridge crane spanning 146 feet. The bridge moves in East / West directions on parallel rails fixed to the structure of the VAB. Trolleys move in North/South directions on rails mounted on each bridge structure. Each trolley carries a complete main hoist assembly which has a capacity of 325 tons and a trailer trolley carries a complete auxiliary hoist assembly which has a capacity of 50 tons. The main hoist has a lift height of 462 feet, 6 inches. The auxiliary hoist has a lift height of 465 feet, 6 inches.

2.1 Mechanical

2.1.1 BRIDGE

The purpose of the bridge drive assemblies is to move the 325 Ton Bridge Crane laterally (East/West) across the length of the VAB (see Figure 2). Each drive assembly consists of an electric motor, gear reducer, electric brake, and associated couplings connected to a drive wheel. There is one drive assembly at each corner of the bridge, for a total of 4. The northwest and southwest assemblies have an encoder and tachometer connected to the motor shaft.

2.1.1.1 Electronic Motor Controllers

The bridge drive is a variable speed DC drive with two speed ranges. Each speed range is fully controllable from minimum to maximum speed, proportional to the control lever position. The neutral (center) position produces zero speed and sets the brakes. The maximum speed in fine range is 7.5 feet per minute and the maximum speed in coarse range is 75 feet per minute.

2.1.1.2 Dual Controllers

The bridge drive system has dual motor controllers, however, only one controller is used at a time during normal operation. The second controller provides stand-by redundancy. If a failure occurs in the primary controller, a switch in the electrical cabinets can be used to select the secondary controller, allowing continued use of the crane. If the bridge becomes skewed on the bridge rails, both controllers can be brought online to activate the anti-skew system.

2.1.2 Trolley

The purpose of the trolley drive assemblies is to move the trolley and hoist assemblies laterally (North / South) across the length of the bridge (see Figure 3). The drive assemblies consist of an electric motor with encoder and tachometer, electric brake, and a gear reducer which drives a shaft to each of the two drive wheels. There are two drive assemblies on the trolley, one on the north side of the trolley and one on the south side.

2.1.2.1 Electronic Motor Controllers

The trolley electronic drive is a variable speed DC drive with two speed ranges. Each speed range is fully controllable from minimum to maximum speed, proportional to the control lever position. The neutral (center) position produces zero speed and sets the brakes. The maximum speed in fine range is 5.0 feet per minute and the maximum speed in coarse range is 50 feet per minute.

2.1.2.2 Dual Controllers

The trolley also has dual motor controllers, but is configured to use one controller at a time. The second drive provides stand-by redundancy. If a failure occurs in the primary drive, a switch in the electrical cabinets on the bridge can be used to select the secondary drive, allowing continued use of the crane.

2.1.3 Main Hoist Assembly

The purpose of the main hoist assembly (see Figure 4) is to lift, hold, and lower the load suspended from the main load block. The hoist assembly consists of a wire rope drum and shaft which is driven on each end by a bull gear and pinion, gear reducer, electric motor, electric brake, and associated couplings. Each of the two independent load paths is capable of holding the rated load. A level wind system is used to ensure proper spooling of the wire ropes on the multi-layer rope drum. There are two independent wire ropes, each capable of holding the rated load.

2.1.3.1 Electronic Motor Controllers

The hoist electronic drives are variable speed DC drives with five speed ranges. Each speed range is fully controllable from minimum to maximum speed, proportional to the control lever position. The neutral (center) position produces zero speed and sets the brakes. The float mode speed is controlled by the position of the float mode potentiometer. The micro speed is set by the numeric keypad. The speeds of the five ranges are shown in the following table.

Speed Range	Maximum	Minimum
Field Weaken	27 ft/min	9 in/min
Coarse	9 ft/min	3 in/min

Fine	1 ft/min	0.3 in/min
Float Mode	0.5 ft/min	0.16 in/min
Micro Mode	0.2 in/min	0.04 in/min

2.1.3.2 Dual Controllers

The main hoist drive system uses a dual motor controller configuration where both controllers are used during normal operation. Each controller operates independently and runs one main hoist motor. Operating the two controllers in parallel allows error checking by comparing the two controllers against each other. If a failure in one controller occurs, the Programmable Logic Controller (PLC) will detect the failure and disable the hoist.

The hoist is capable of operating on only one controller should a controller failure occur. A switch in the electrical cabinets on the bridge can be used to select a single controller, which will operate one hoist motor. Both brakes will still be used while one motor / controller has been disabled.

2.1.3.3 Monitoring

A number of systems are used to monitor the operation of the main hoist. A rotary limit switch, resolver, and centrifugal overspeed switch are driven directly from the wire rope drum. The computer controller calculates the load block speed from the motor encoder feedback for a redundant means of overspeed detection. The wire rope equalizer is monitored by limit switches for excessive travel. Wire rope spooling is also monitored with limit switches on the level wind assembly.

2.1.4 Auxiliary Hoist Assembly

The purpose of the auxiliary hoist assembly is to lift, hold, and lower the load suspended from the auxiliary load block (see Figure 5). The hoist assembly consists of a wire rope drum and shaft which is driven on each end by a bull gear and pinion, gear reducer, electric motor, electric brake, and associated couplings. Each of the two independent load paths is capable of holding the rated load. A level wind system is used to ensure proper spooling of the wire ropes on the multi-layer rope drum. There are two independent wire ropes, each capable of holding the rated load.

2.1.4.1 Electronic Motor Controllers

The auxiliary hoist electronic drives are variable speed DC drives with four speed ranges. Each speed range is fully controllable from minimum to maximum speed, proportional to the control lever position. The neutral (center) position produces zero speed and sets the brakes. The maximum speed in coarse range is 20 feet per minute maximum speed in fine range is 2.0 feet per minute, and the maximum speed in float mode is 0.5 feet per minute. The hoist has an additional field weaken speed of 60 feet per minute.

2.1.4.2 Dual Controllers

The auxiliary hoist drive system uses a dual motor controller configuration where both controllers are used during normal operation. Each controller operates independently and runs one main hoist motor. Operating the two controllers in parallel allows error checking by comparing the two controllers against each other. If a failure in one controller occurs, the PLC will detect the failure and disable the hoist.

The hoist is capable of operating on only one controller should a controller failure occur. A switch in the electrical cabinets on the bridge can be used to select a single controller, which will operate one hoist motor. Both brakes will still be used while one motor / controller has been disabled.

2.1.4.3 Monitoring

A number of systems are used to monitor the operation of the auxiliary hoist. A rotary limit switch and centrifugal overspeed switch are driven directly from the wire rope drum. The computer controller

calculates the load block speed from the motor encoder feedback for a redundant means of overspeed detection. The wire rope equalizer is monitored by limit switches for excessive travel. Wire rope spooling is also monitored with limit switches on the level wind assembly.

2.1.5 Hook Rotation

The main hoist and auxiliary hoist load blocks have rotation drives, which are fully controllable from zero to 0.5 revolutions per minute. The drives can be disengaged to allow free rotation of the load. Each hoist has an electrically driven cable reel to provide power and control of the rotation drive from the crane to the load.

2.2 Electrical

2.2.1 Cabling

Three phase, 480 Volt AC power is supplied to each crane from a three conductor feed rail, which runs parallel to the bridge rails. The power is run through isolation transformers and distributed to the control cabinets and control cab. Power is carried from the bridge to the trolley through a power track.

2.2.2 Control Cab

The crane control panel and radio communications for the operators are located in the control cab which is suspended below the West bridge girder on each crane. The control panel (see Figure 6) has two primary operator stations, one for lateral movements and the other for vertical movements. Each station has selector switches, indication lights, master switches, control potentiometers and computer generated position displays. The hoist control station has an additional computer interface panel (see Figure 7) for automated crane functions.

2.2.3 Computer Controller

2.2.3.1 PLC

The computer controller logic flow is shown in Figure 8. The primary crane control is accomplished through the GE 90-70 PLC. Its software monitors the operator inputs, limit switches, and motor feedback, checks for system errors, and provides output signals to control the crane subsystems and motor velocity. The PLC consists of a standard VME computer chassis and plug in cards. The cards include power supplies, Central Processing Unit (CPU) with memory, digital input, digital output, analog input, analog output, bus transmitter, bus receiver and GENIUS I/O cards.

2.2.3.2 DELTA TAU

The ΔT board is a programmable multi-axis controller residing within the PLC VME chassis. It is the primary motor servo controller. The ΔT board receives digital rate commands from the PLC, compares the command to the encoder feedback from the motor, and issues an analog current command to the motor control module. The ΔT board has numerous built in error checking functions including software position limits, following error, velocity limits, acceleration limits, output limits, and illegal encoder transition. The ΔT board also features a watchdog timer, which will disable the drives if a software error occurs. The ΔT board will detect an under voltage condition and shut itself down before the memory or software can be corrupted.

2.2.3.3 Anti-Skewing

Bridge alignment may be controlled by the anti-skewing system. A roller mechanically transmits the relative rail position to a Linear Voltage Displacement Transducer (LVDT). Varying rail position will

cause a varying voltage signal to be sent from the LVDT to the controller. The controller will send differential rate commands to the separate bridge drives, causing one end to speed up or slow down depending upon what is required to realign the bridge. There is one LVDT / roller assembly on each corner of the bridge.

2.2.3.4 Weighing Systems

The main hoist has three independent weighing systems. Two weighing systems are located on the trolley (upper block). Both systems have analog outputs, which go to the PLC. The PLC uses the weight information to set the amount of torque biasing for a given load. The PLC also compares the outputs from the two weighing systems in order to detect failures. The PLC will prevent further hoist operation when an excessive difference is detected between the two weighing systems.

A manual override can be used if a weighing system fails. This override requires that the operator enter a four-digit password, then enter the weight of the load in tons. Once both items are entered into the PLC, the weighing system error will be bypassed, allowing operation of the hoist. The PLC will use the weight entered to set the proper torque biasing. The auxiliary hoist has two upper block weighing systems, which operate identically to the main hoist upper block weighing systems.

The main hoist has a third weighing system located on the lower block. The Metrox Model CLT01-50001 PMN:H72-1200-01A, 02A receives power through the hoist cable reel and transmits a Radio Frequency (RF) signal when interrogated by a portable transceiver. This system can be disabled with a switch in the control cab when RF silence is required. The lower block weighing system is not used by the PLC for crane control or operation.

2.2.3.5 Position Displays

The computer generated position displays are located next to the operator interface terminal in the control cab. There is one display for each hoist, main and auxiliary, and one for the bridge and trolley combined. The hoist displays show one indicator for vertical load block position and one indicator for hook rotational position (see Figure 9.) The bridge and trolley horizontal positions are combined on to the third position display. A digital display is located below each dial indicator to show cumulative distance or hook rotation. Arrows are displayed during motion to clarify the direction of dial indicator rotation. One rotation of the hoist position indicator represents 1/4 inch of hook movement. One rotation of the hook rotation indicator represents 10 ° of hook rotation. One rotation of the bridge or trolley position indicator represents 1/2 inch of movement.

2.2.3.6 Automated Crane Functions

Several automated crane functions are available through the operator interface terminal located above the hoist controls. The operator can use one of two functions, distance to move and time to move. The operator types in the desired parameter, starts the crane motion, and presses cruise control start. The operator can release the controls and the PLC will continue the motion until the specified parameter is met. The operator can press cruise control stop at any time to stop the motion. These automated features are available for the main hoist and auxiliary hoist only and work in all hoist speed ranges. Main hoist cruise and auxiliary hoist cruise operate independently from each other.

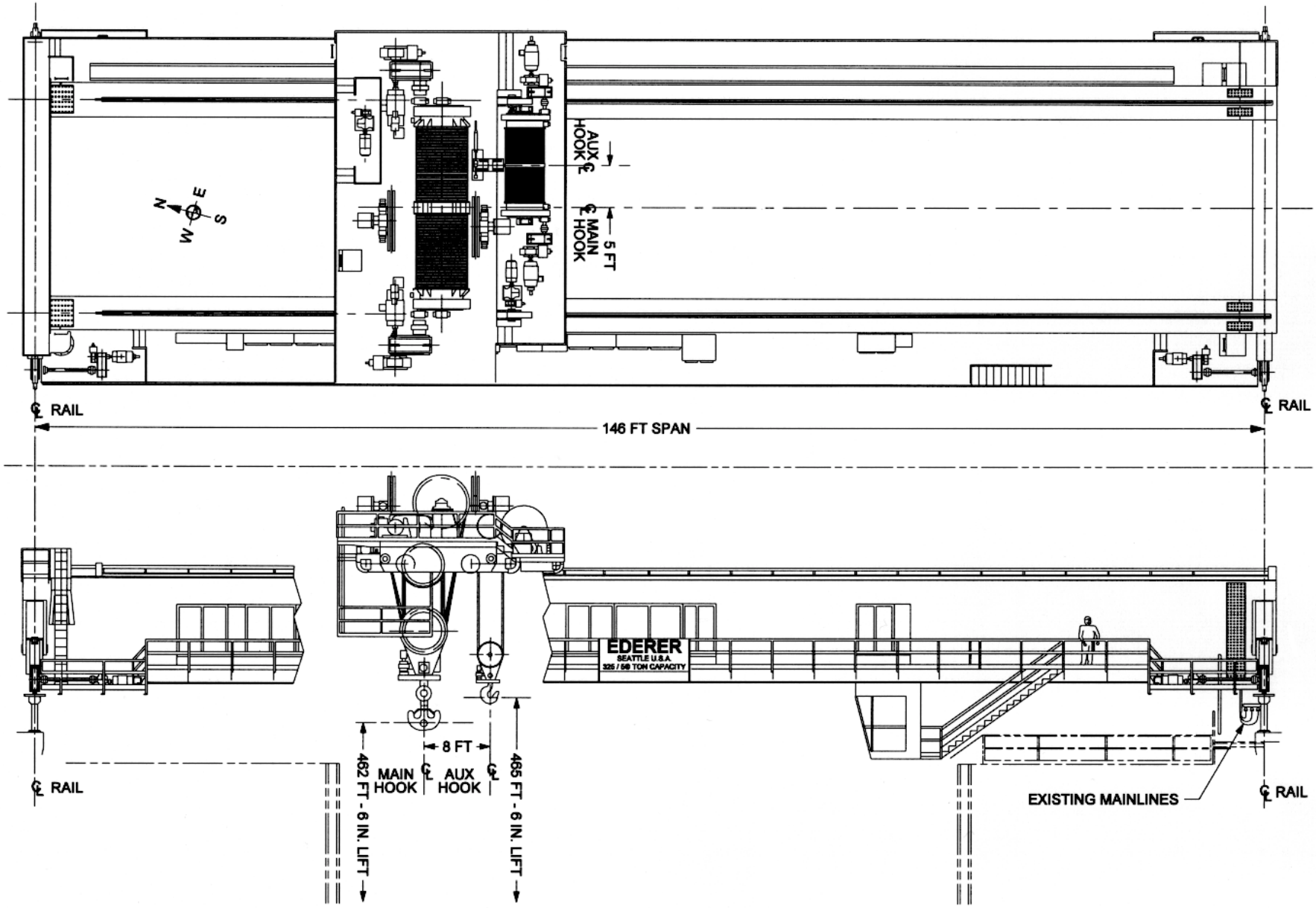

Figure 1. 325 Ton Bridge Crane, VAB High Bay 4

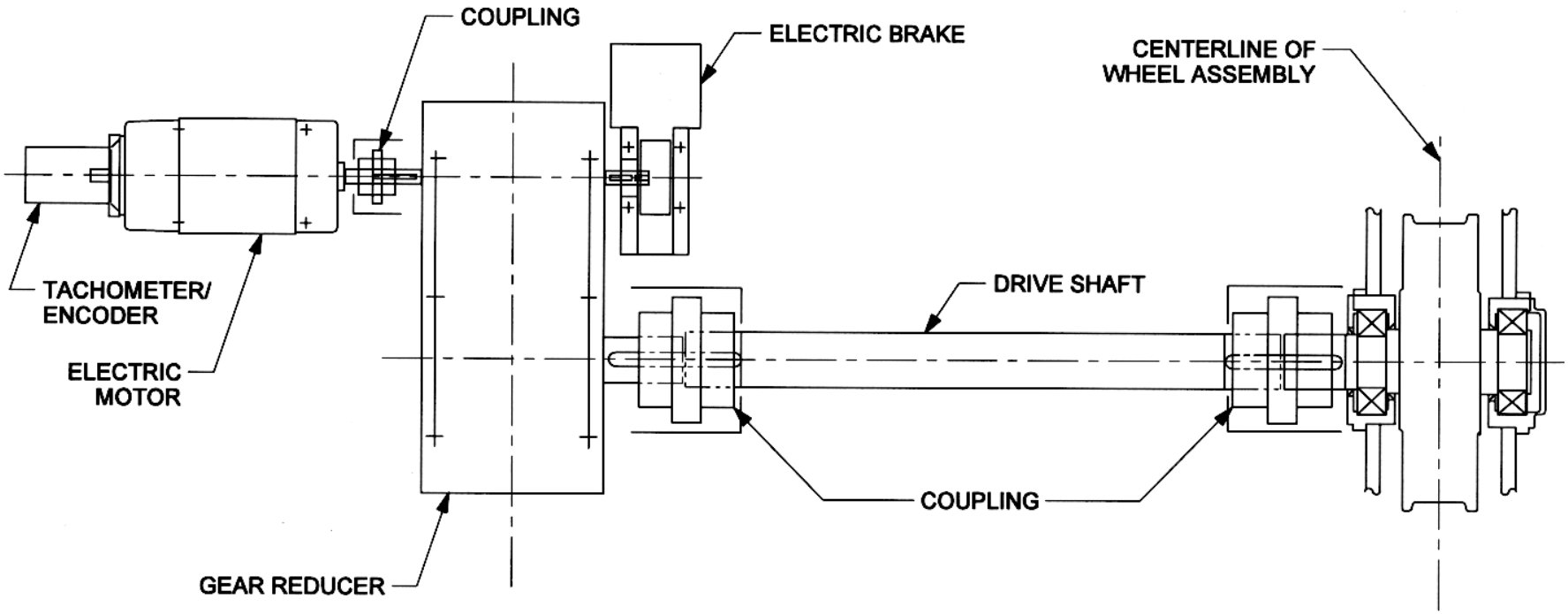

Figure 2. Bridge Drive Assembly

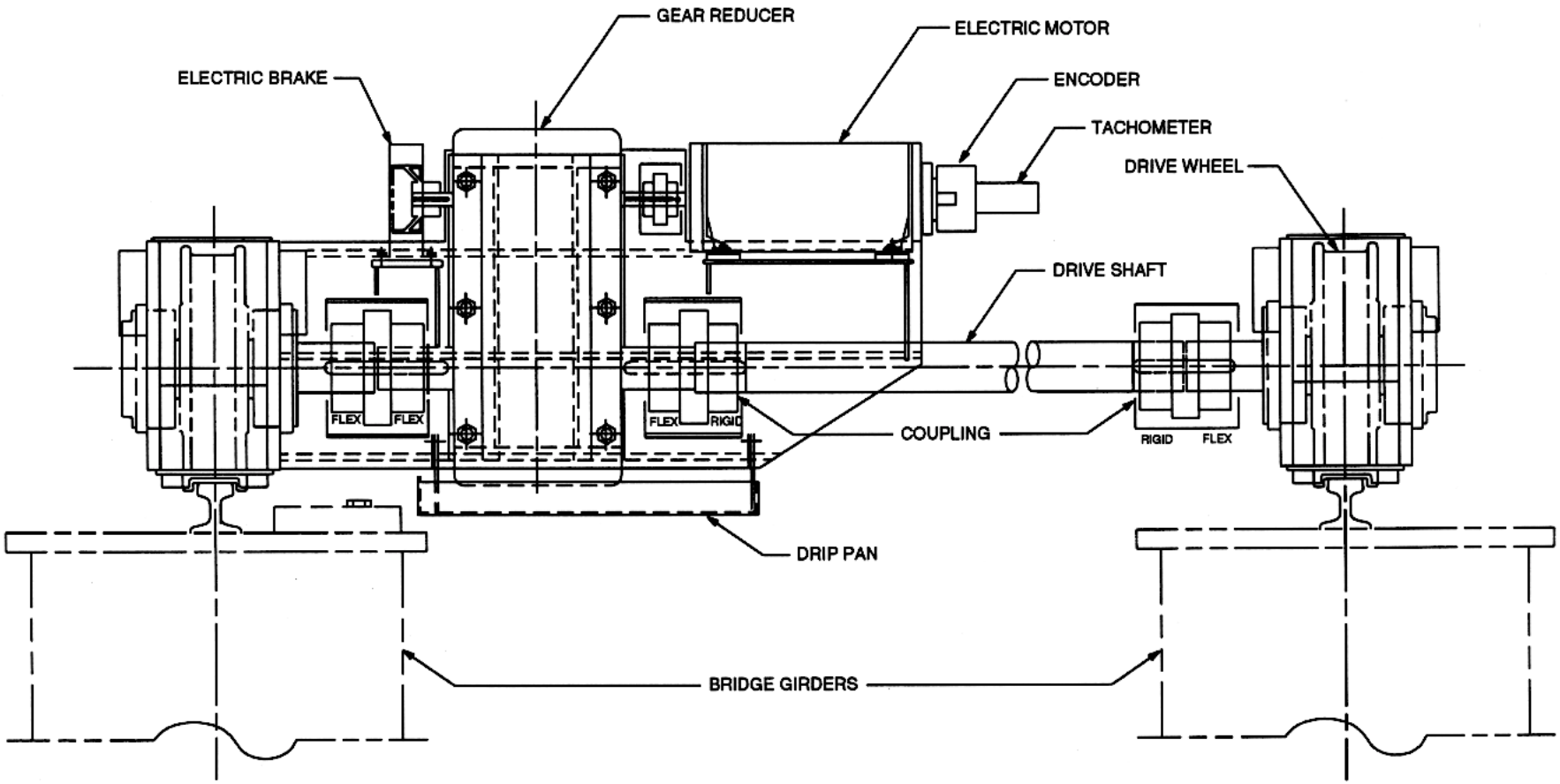

Figure 3. Trolley Drive Assembly

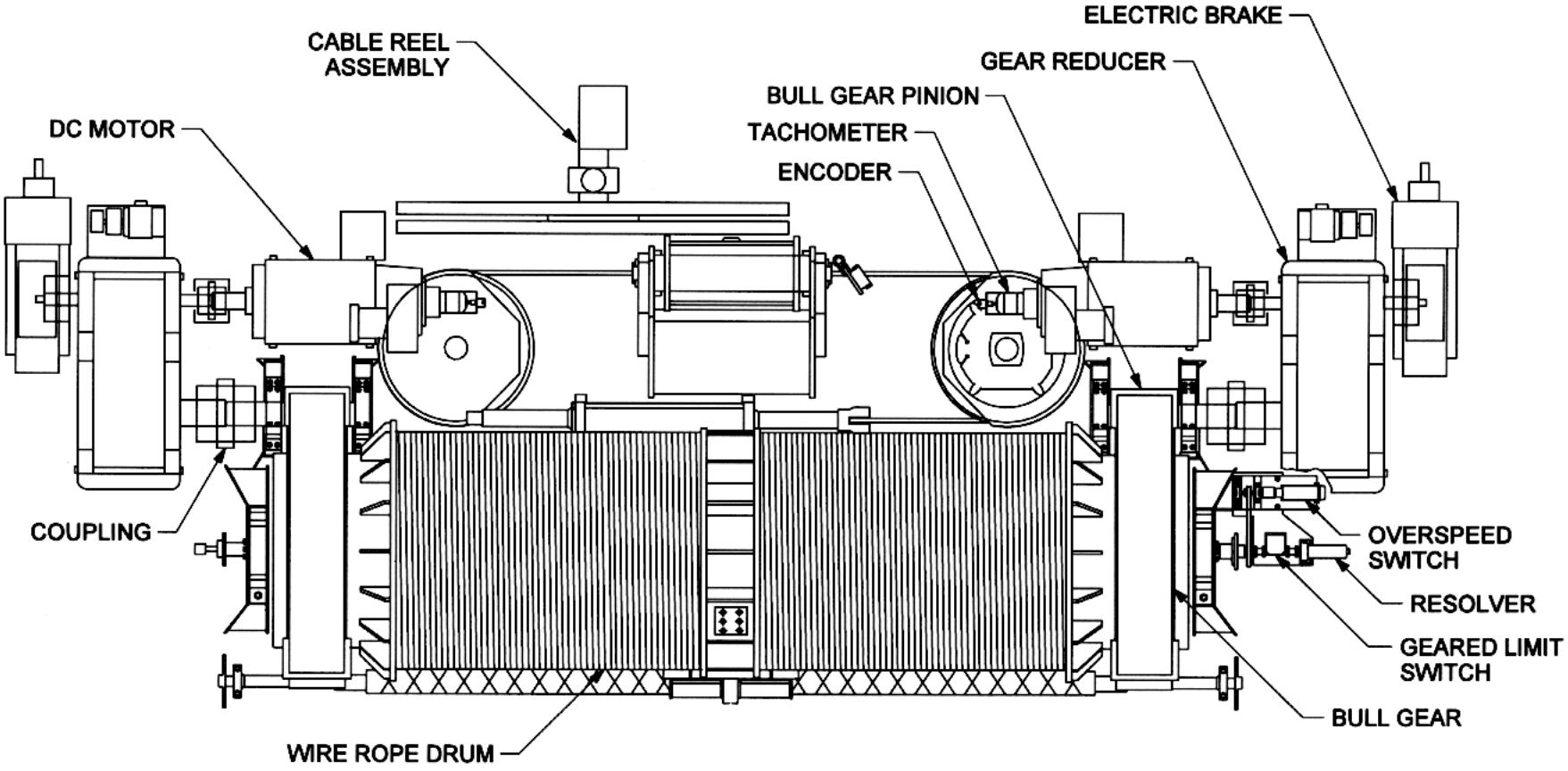

Figure 4. Main Hoist Assembly

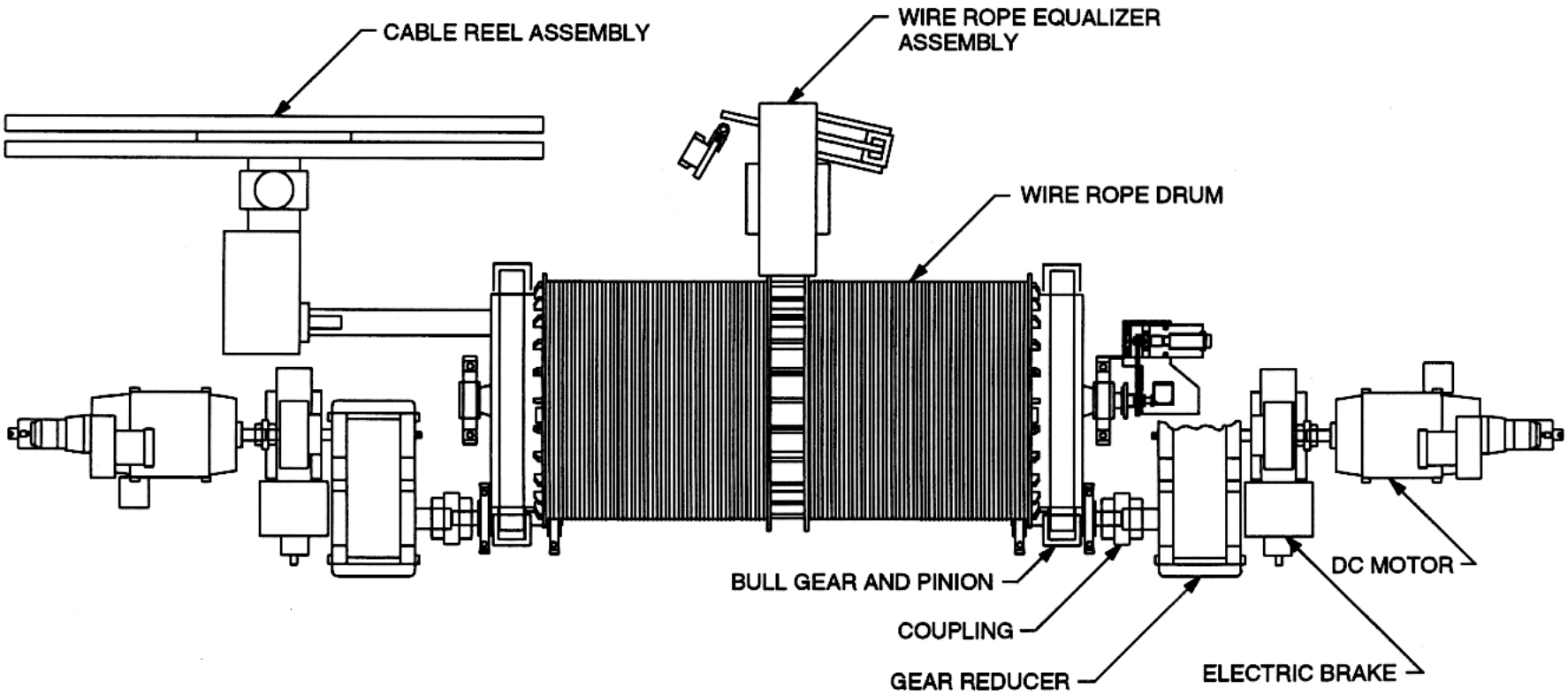

Figure 5. Auxilary Hoist Assembly

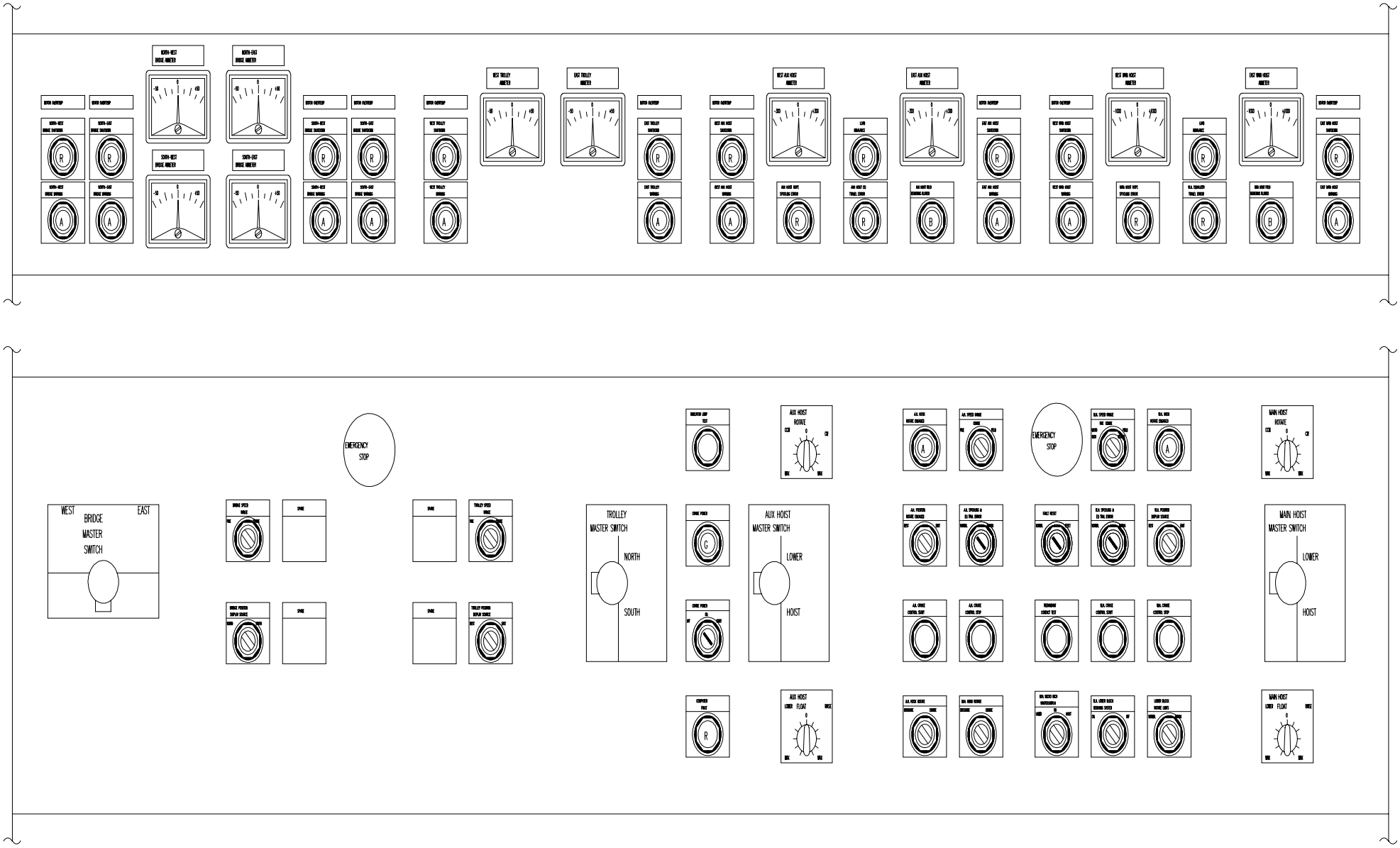

Figure 6. 325 Ton Crane Control Panel

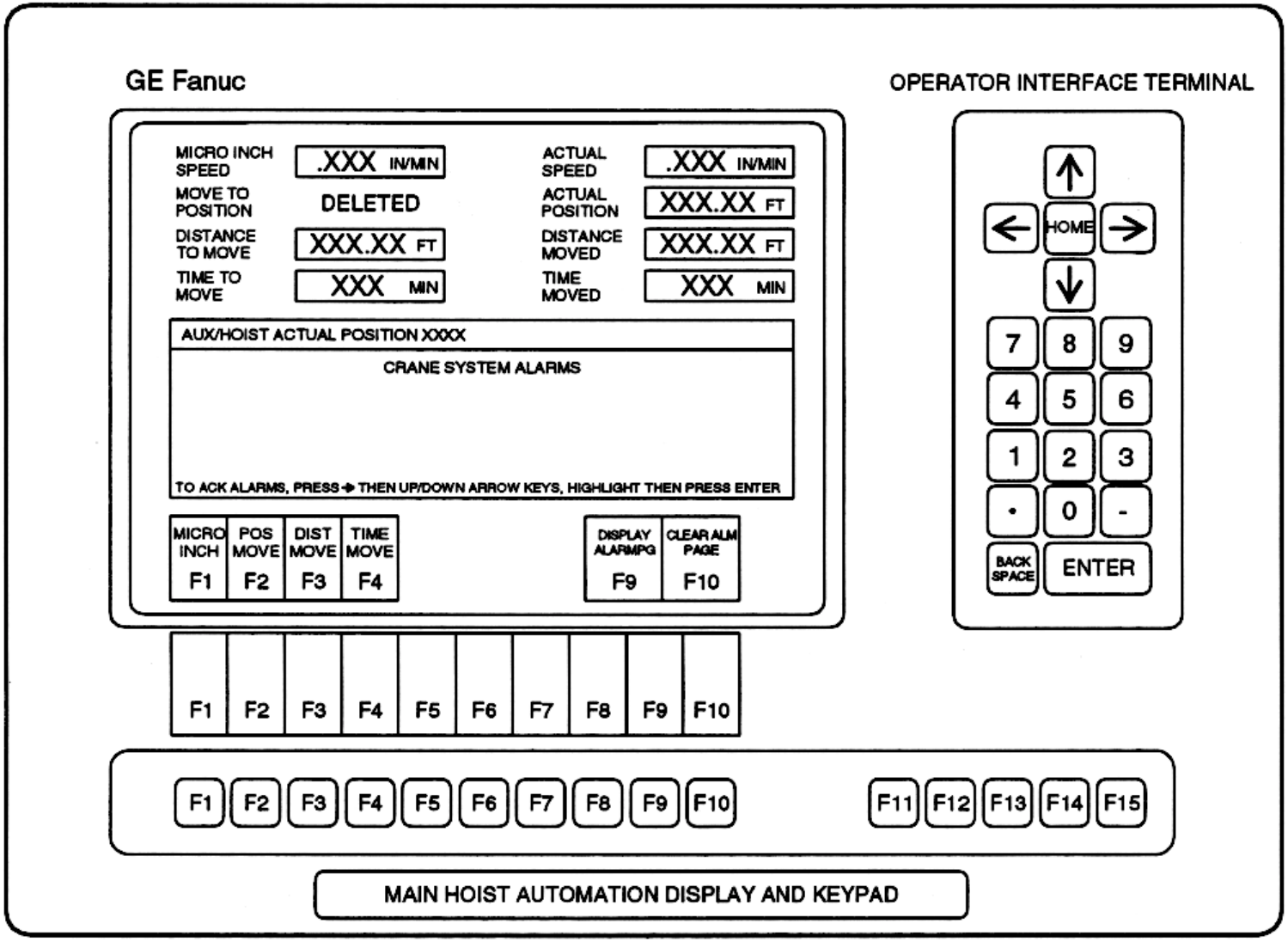

Figure 7. Hoist Operator Interface Terminal

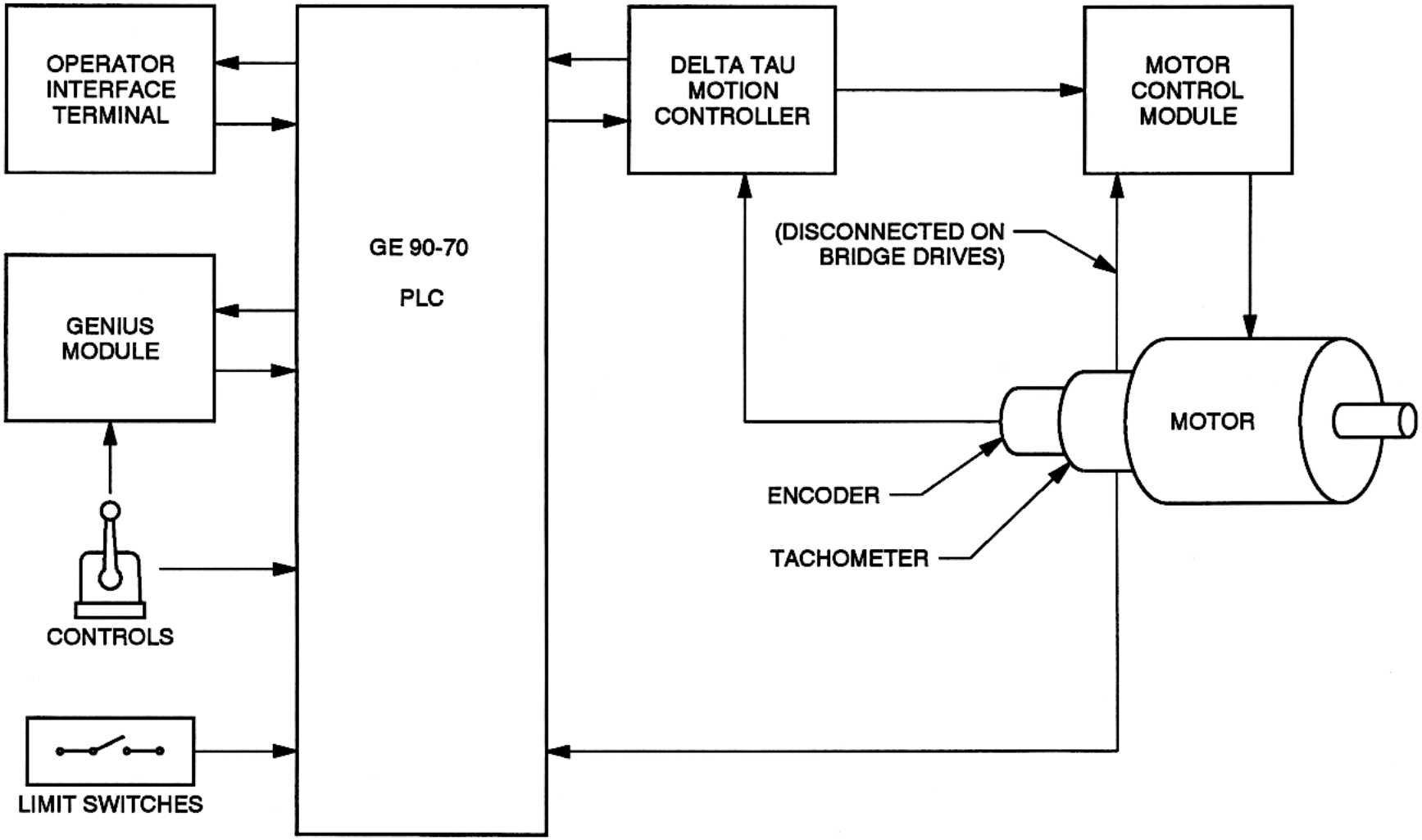

Figure 8. Controller Logic Flow Diagram

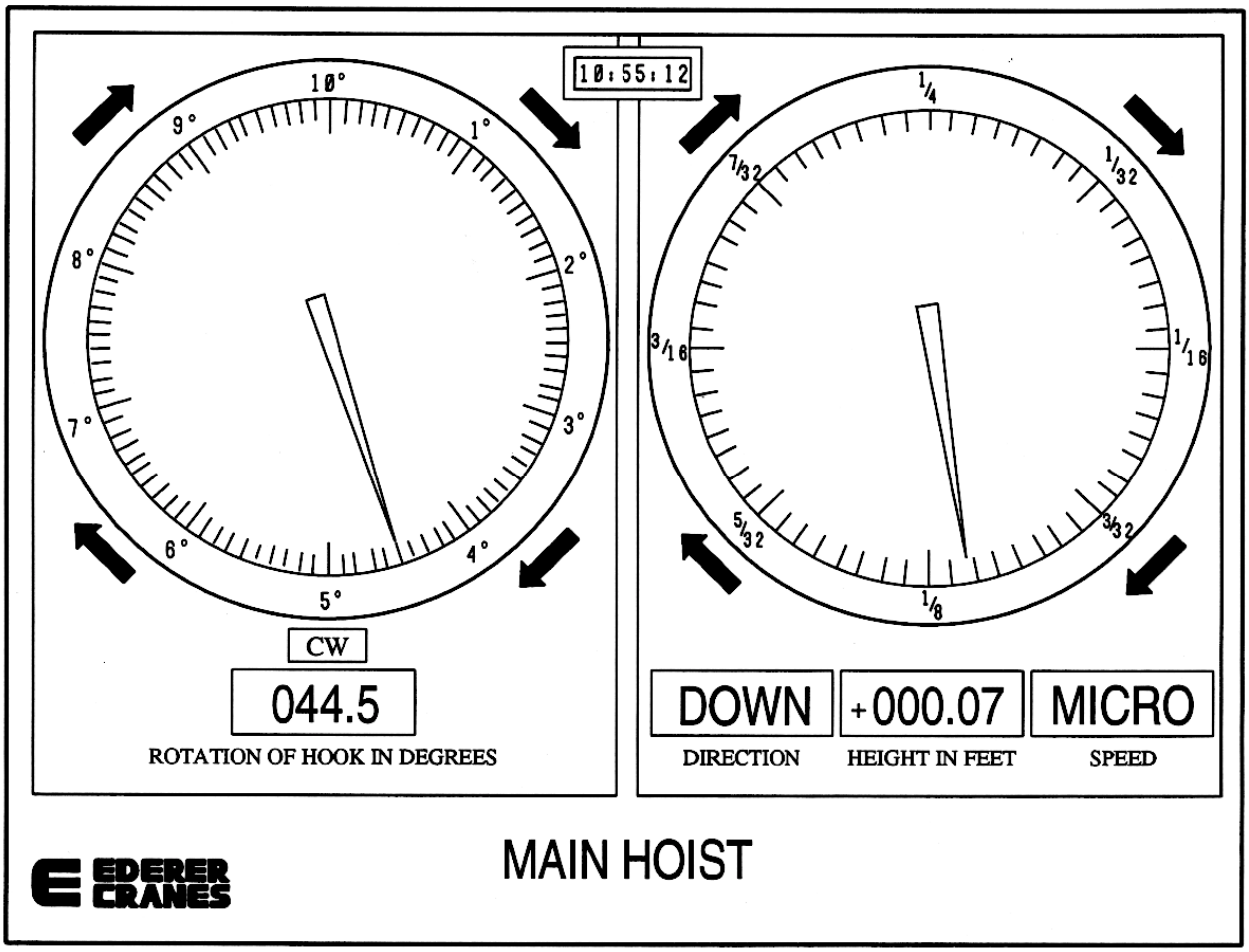

Figure 9. Main Hoist Position Display

3 ANALYSIS GROUNDRULES

This analysis has been developed in accordance with NSTS 22206 and NSTS 22254.

The following additional groundrules and assumptions were used during this analysis:

a. Fine, Float or Micro speed will be used when a critical load is within 10 feet of a structure, or when a load is within 10 feet of a critical item. This speed restriction only applies to the crane motion in the direction of travel towards the structure or critical item.

b. The lower block weighing system and RF transmitters were not analyzed since they are not related to the critical functions of the crane. Reference Ederer drawing ED-2508 sheet 14.

c. The circuits downstream of the following components were not analyzed since they are not related to the critical functions of the crane:

- ACFU1, 2, 3 - Panel Air Conditioners
- CACCB - Cab Air Conditioning
- TFLCB - Trolley Floodlights
- BFLCB - Bridge Girder Floodlights
- BWCB1 - Resistor / Transformer Enclosure Blowers
- WFLCB - West Footwalk Floodlights
- EFLCB - East Footwalk Floodlights
- RMCB - Drill Motor Circuit Breaker
- FWR - West Girder Footwalk receptacles
- FER - East Girder Footwalk receptacles
- TR - Trolley receptacles
- CCR - Control Panel and Control Cab receptacles
- CPL - Control Panel and Control Cab Lighting

d. Failure modes to the master switch potentiometers related loss of continuity to the center tap (failing open) or a Brake in the resistive material of the potentiometer (failing open) will not be considered due to the construction and design features of the potentiometers used. Reference Failure Analysis and Materials Evaluation report number 94-3003.

e. The following ground rules were used only for the sections of this analysis which assessed the backup modes of operation.

1. The first failure which caused the loss of the primary mode of operation will not be considered for the purposes of assigning criticality to subsequent failures. The subsequent failures assessed in the following FMEA / CIL will have criticality categories assigned on the basis of the direct effects of that failure.

2. The mechanical components of this system will not be analyzed for a backup mode of operation. The configuration and operation of these components is not affected by switching any of the drives (main hoist, auxiliary hoist, trolley or bridge) to their backup modes of operation.

3. The electrical components analyzed in the main power section of the FMEA will not be analyzed for a backup mode of operation. The configuration and operation of these components is not affected by switching any of the drives (main hoist, auxiliary hoist, trolley or bridge) to their backup modes of operation.
4. The backup operating mode of the trolley drive control system will not be included in this analysis. The backup-operating mode switches to a stand-by secondary electronic drive module, which has the same configuration as the primary drive. The safety monitoring and control of the trolley is identical for either drive module. Possible failures of the switching components will be assessed in the electrical FMEA of the trolley controls.

4 FAILURE MODES AND EFFECTS ANALYSIS

4.1 CRITICALITY ASSESSMENT

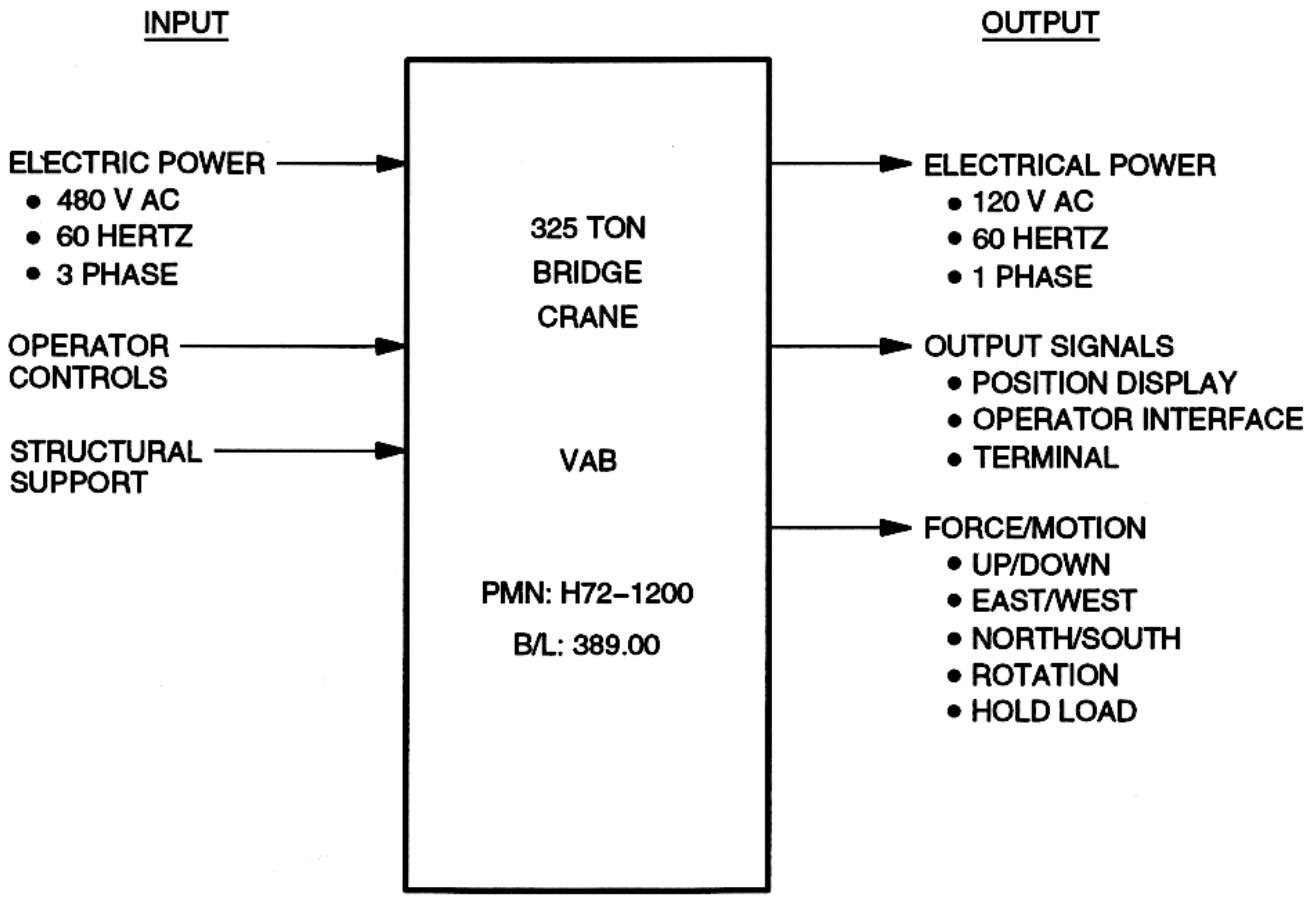

Figure 10. Systems Functions Block diagram of the 325 Ton Bridge Crane

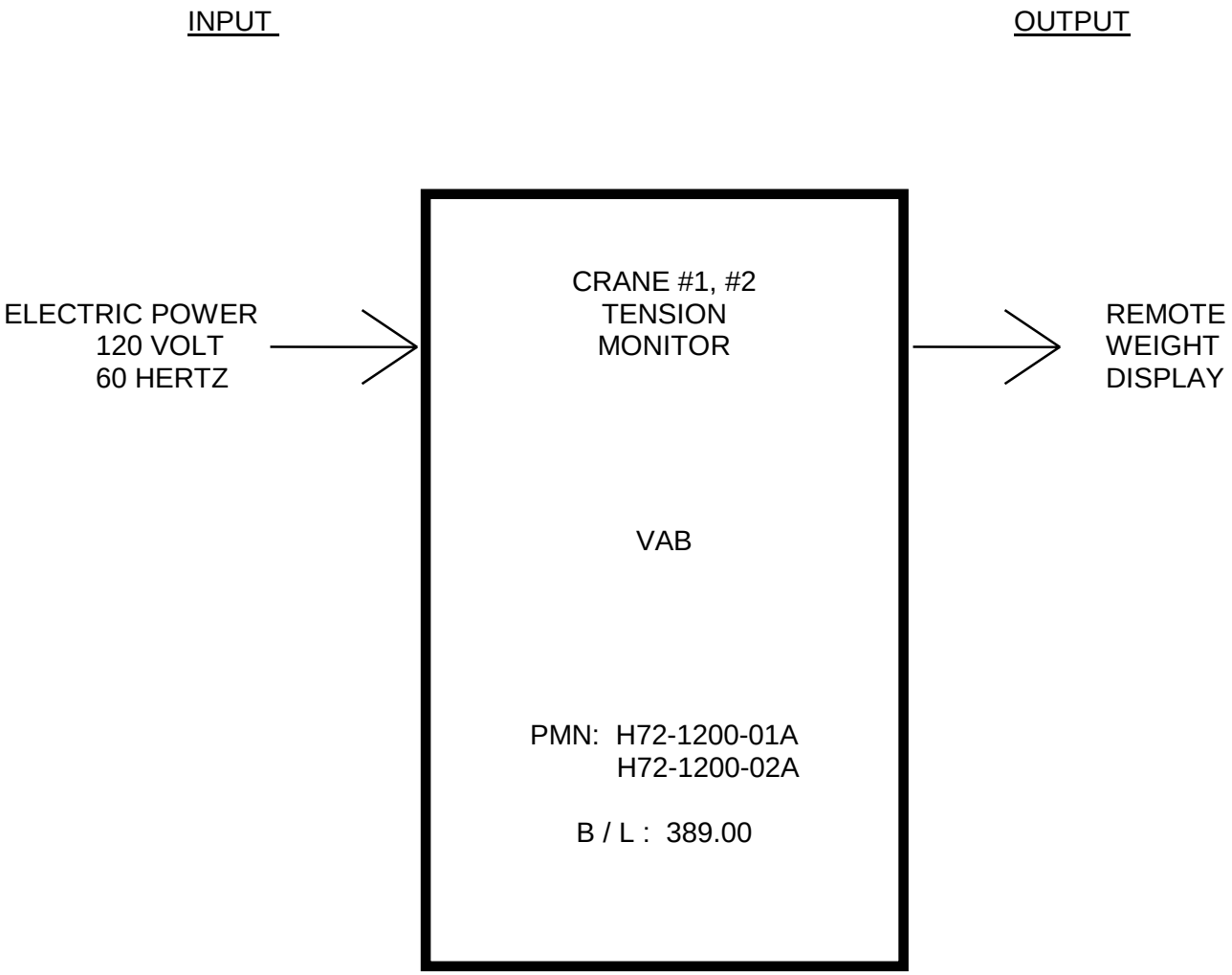

Figure 11. System Functions Block Diagram of the Tension Monitor

Table 2. **Criticality Assessment Worksheet - H72-1200-01, -02**

System/Subsystem: 325 Ton Bridge Cranes at the Vehicle Assembly Building High Bays 1/2/3/4
Location: VAB
Baseline Number: 389.00

Input / Output	Function	Time Period	Effect of Loss/Failure If Function Fails to Operate or Cease Operation on Time, Fails During Operation, and/or Prematurely Operates	Crit / Noncrit	Notes
Input					
480 VAC, 60 Hz, 3 phase Electric power	Supplies power to operate controls, motors and brakes for hoist, trolley and bridge	During crane operations	Failure of power during operations would result in loss of ability to operate crane. Delay in operations.	NC	
Operator controls	Provides control for operating crane and handling load	During crane operations	Failure of operator control could allow load to continue to move in specified direction and could result in collision between load and an obstruction with possibility for loss of life and/or vehicle.	C	See Hazards Analysis
Structural support	Provides static foundation to support crane	Continuous	Failure of structural support for the crane could result in loss of life and/or vehicle.	C	Analysis of passive structure not required per NSTS 22206
Output					
120 VAC, 60 hz, 1 phase Electric power	Supplies power to radios and accessories	During crane operations	Loss of power during operation would result in loss of radio communication and could result in collision of the load with an obstruction with potential for loss of life and/or vehicle.	C	See FMEA – Main Power
Output signals Position Display Operator Interface Terminal	Provides analog and digital information to crane operators relating position and velocity	During crane operations	Failure during operation would fail to indicate crane motion and could result in collision of load with an obstruction possibly causing loss of life and/or vehicle.	C	See FMEA – PLC Primary / Backup Modes
Force / motion Up / Down Main hoist / Aux. Hoist	Raise / Lower and position flight hardware	As Required	Failure during operation would allow load to continue to move in specified direction and could result in damage to a vehicle system.	C	See FMEA – Main / Aux. Hoist Primary / Backup Modes
North / South (Trolley)	Position flight hardware	As Required	Failure during operation would allow load to continue to move in specified direction and could result in damage to a vehicle system.	C	See FMEA - Trolley

Input / Output	Function	Time Period	Effect of Loss/Failure If Function Fails to Operate or Cease Operation on Time, Fails During Operation, and/or Prematurely Operates	Crit / Noncrit	Notes
East / West (Bridge)	Position flight hardware	As Required	Failure during operation would allow load to continue to move in specified direction and could result in damage to a vehicle system.	C	See FMEA – Bridge Primary / Backup Modes
Rotation (Hook)	Position flight hardware	As Required	Failure during operation would allow load to continue to rotate in specified direction resulting in contact of the load with an obstruction and could result in Loss / damage to a vehicle system.	C	See FMEA - Main Hoist Primary / Backup Modes
Hold load / stop (Main Hoist / Aux. Hoist Trolley / Bridge)	Stop and hold load in a fixed position	As Required	Failure to operate on time would result in being able to stop normal or abnormal crane motion. Possible loss of life and/or vehicle or damage to a vehicle system.	C	See FMEA - Main / Aux. Hoist Primary / Backup Modes, Trolley, Bridge, Primary / Backup Modes
Control Cab Indicator Lights	Allows operator to monitor crane operation indicators	As Required	Operator will not be able to observe crane operation indicators. Delay in operations	NC	

Table 3. **Criticality Assessment Worksheet - H72-1200-01A, -02A**

System/Subsystem: 325 Ton Bridge Cranes at the Vehicle Assembly Building High Bays 1/2/3/4 / Tension Monitors
Location: VAB

Baseline Number: 389.00

Input / Output	Function	Time Period	Effect of Loss/Failure If Function Fails to Operate or Cease Operation on Time, Fails During Operation, and/or Prematurely Operates	Crit / Noncrit	Notes
Input					
Electrical power - 120 VAC, 60 hz, 1 phase	Supplies power to load cell and radio transmitters (from crane)	During crane operations	Loss of power during operation would result in loss of remote weight readout. Delay in operations.	NC	
	Supplies power to receiver / remote display (from VAB)	During crane operations	Loss of power during operation would result in delay of operations.	NC	
Output					
Remote Weight Display	Provides remote weight readout at ground / operating level	During crane operations	Failure during operation resulting in an erroneous output could result in loss / damage of a vehicle system due to inappropriate authorization to continue operations.	C	The tension monitor unit is not presently being used. Therefore, FMEA will not be performed.

4.2 FMEA WORKSHEETS

The Failure Modes and Effects Analysis follows.

The following components were considered passive in the analysis:

Hook	Hook Nut	Eye Hook	Load Cell Pin
Main Hook Yoke	Trunnion	Sheave Pin	Sheave Guard
Load Block	Sheaves	Equalizer Assembly	Equalizer Strap
Wire Rope	Turn Sheaves	Upper Sheaves	Pillow Block
Main Hoist Drum	Wire Rope Clamp	Bar	Shaft
Coupling Guard	Gear Guard	Drum Restraint	Base
Finger	Aux. Hook Yoke	Yoke Pin	Eye Hook Block
Eye Hook Shaft	Locking Pin	Structure	Lower Block
Electrical Control Cable Spool			

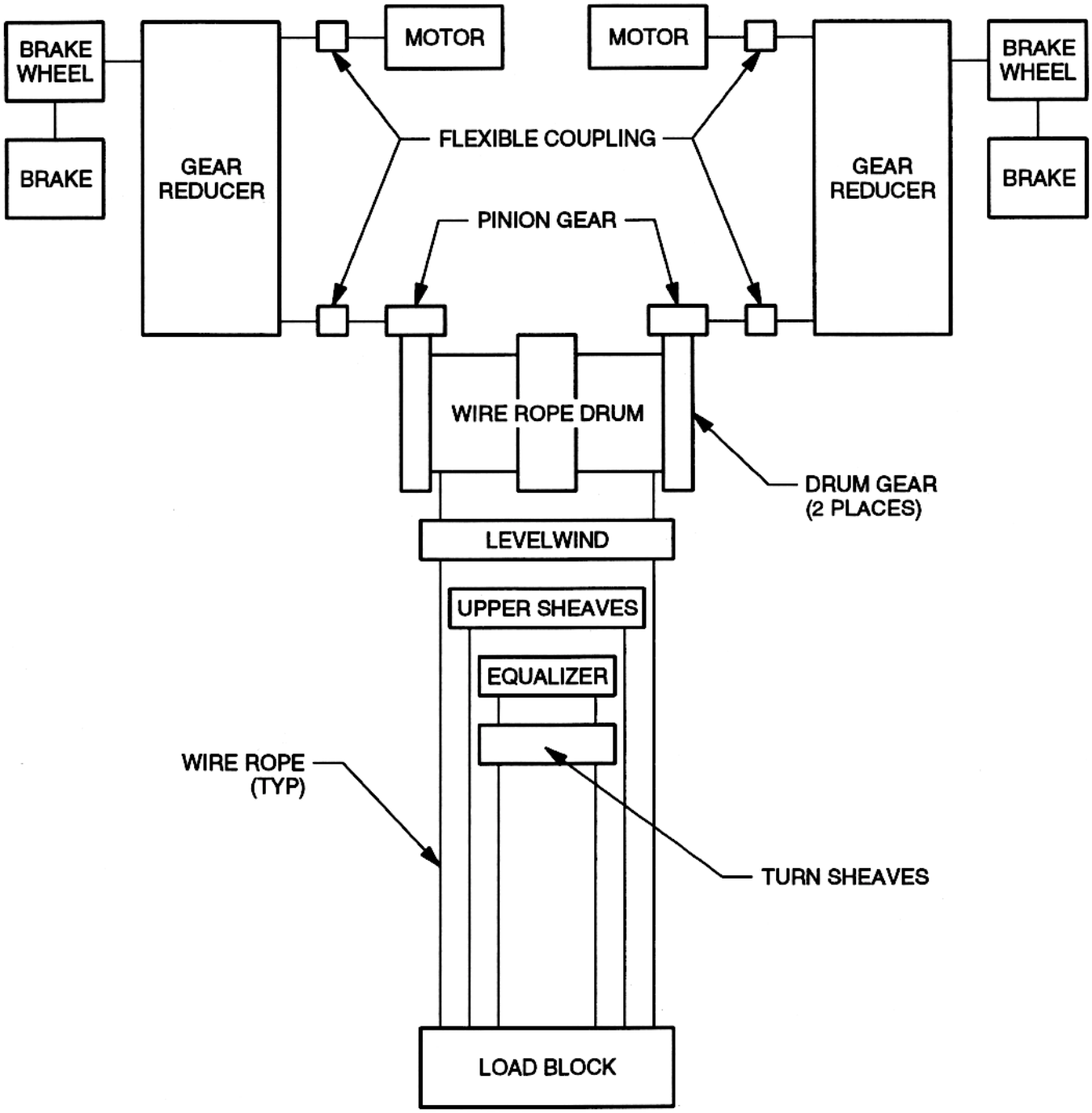

Figure 12. Main Hoist Mechanical FMEA Diagram

Table 4. **Mechanical FMEA - Main Hoist Assembly**

System/Subsystem: 325 Ton Bridge Cranes at the Vehicle Assembly Building High Bays 1/2/3/4 / Main Hoist Assembly
PMN: H72-1200-01, -02
Drawing No.: A-14878/A
Reference Figure: Figure 12

Find No. Part No.	Part Name	Part Function	a. Failure Mode b. Cause c. FMN d. Detection Method e. Correcting Action f. Time to Effect g. Timeframe	Failure Effect On System Performance	Failure Effect On Vehicle Systems And/Or Personnel Safety	Crit Cat
1 2002HLE	Hoist Gear Reducer	Transmits torque from DC electric motor and electric brake to Pinion gear coupling	a. Gear disengages b. Structural Failure c. 09FY120-001.001 d. Visual e. None f. Immediate g. NA	Loss of ability for associated motor to control load and for associated brake to hold load. Opposite load path will maintain control of the load. Computer controller will detect load imbalance and disable hoist.	Requires failure in opposite load path to loose control of the Load. Could cause loss of life and/or vehicle	1R
			Seizes	Hoist drum will cease to rotate, motor control modules will limit output current, computer controller will detect motion error and disable hoist. Delay in operations.	No effect.	3
2 KOP-FLEX 7HM	Pinion Gear Coupling	Transmits torque from hoist gear reducer output shaft to pinion gear	a. Key disengages b. Structural Failure c. 09FY120-001.002 d. Visual e. None f. Immediate g. NA	Loss of ability for associated motor to control load and for associated brake to hold load. Opposite load path will maintain control of the load. Computer controller will detect load imbalance and disable hoist.	Requires failure in opposite load path to loose control of the Load. Could cause loss of life and/or vehicle.	1R
4	Hoist Drum Pillow Block Bearing	Support and hold hoist drum shaft in place while allowing it to rotate freely	Bearing seizes	Hoist drum will cease to rotate. Motor control modules will limit output current. Computer controller will detect motion error and disable hoist. Delay in operations.	No effect.	3

Find No. Part No.	Part Name	Part Function	a. Failure Mode b. Cause c. FMN d. Detection Method e. Correcting Action f. Time to Effect g. Timeframe	Failure Effect On System Performance	Failure Effect On Vehicle Systems And/Or Personnel Safety	Crit Cat
6 C-24289	Hoist Brake Wheel	Provides torque to hold load when hoist drive is de-energized	a. Key disengages b. Structural Failure c. 09FY120-001.003 d. Visual e. None f. Immediate g. NA	Loss of ability for brake to hold load. Opposite load path will maintain control of the load. Computer controller will detect tachometer or load imbalance when opposite drive takes up backlash and torsional deflection. Computer controller will disable hoist.	Requires failure in opposite load path to loose control of the Load. Could cause loss of life and/or vehicle.	1R
None DS9528A105	Hoist Electric Brake	Provides torque to hold load when hoist drive is de-energized	a. Fails to set b. Stuck mechanism, worn or glazes shoes c. 09FY120-001.004 d. Visual e. None f. Immediate g. NA	Loss of ability for brake to hold load. Opposite load path will maintain control of the load. Computer controller will detect tachometer or load imbalance when opposite drive takes up backlash and torsional deflection. Computer controller will disable hoist.	Requires failure in opposite load path to loose control of the Load. Could cause loss of life and/or vehicle.	1R
			Fails to release	Motors will attempt to drive through brake. Computer controller will detect following error, encoder error or load imbalance and disable hoist drives.	No effect.	3
None	Hoist DC Electric Motor	Provides torque to raise, hold and lower load	Fails to operate	Torque proving will not be successful. Hoist will not operate. Operator can switch to single drive operation if only one motor (East or west) has failed.	No effect.	3
10 C-24632	Hoist Pinion Gear	Transmits torque from hoist gear reducer to hoist wire rope drum.	a. Gear Disengages b. Structural Failure c. 09FY120-001.005 d. Visual e. None f. Immediate g. NA	Loss of ability for associated motor to control load and for associated brake to hold load. Opposite load path will maintain control of the load. Computer controller will detect load imbalance and disable hoist.	Requires failure in opposite load path to loose control of the Load. Could cause loss of life and/or vehicle.	1R

Find No. Part No.	Part Name	Part Function	a. Failure Mode b. Cause c. FMN d. Detection Method e. Correcting Action f. Time to Effect g. Timeframe	Failure Effect On System Performance	Failure Effect On Vehicle Systems And/Or Personnel Safety	Crit Cat
11 C-24203	Hoist Drum Gear	Transmits torque from hoist gear reducer to hoist wire rope drum.	a. Gear Disengages b. Structural Failure c. 09FY120-001.006 d. Visual e. None f. Immediate g. NA	Loss of ability for associated motor to control load and for associated brake to hold load. Opposite load path will maintain control of the load. Computer controller will detect load imbalance and disable hoist.	Requires failure in opposite load path to loose control of the Load. Could cause loss of life and/or vehicle.	1R

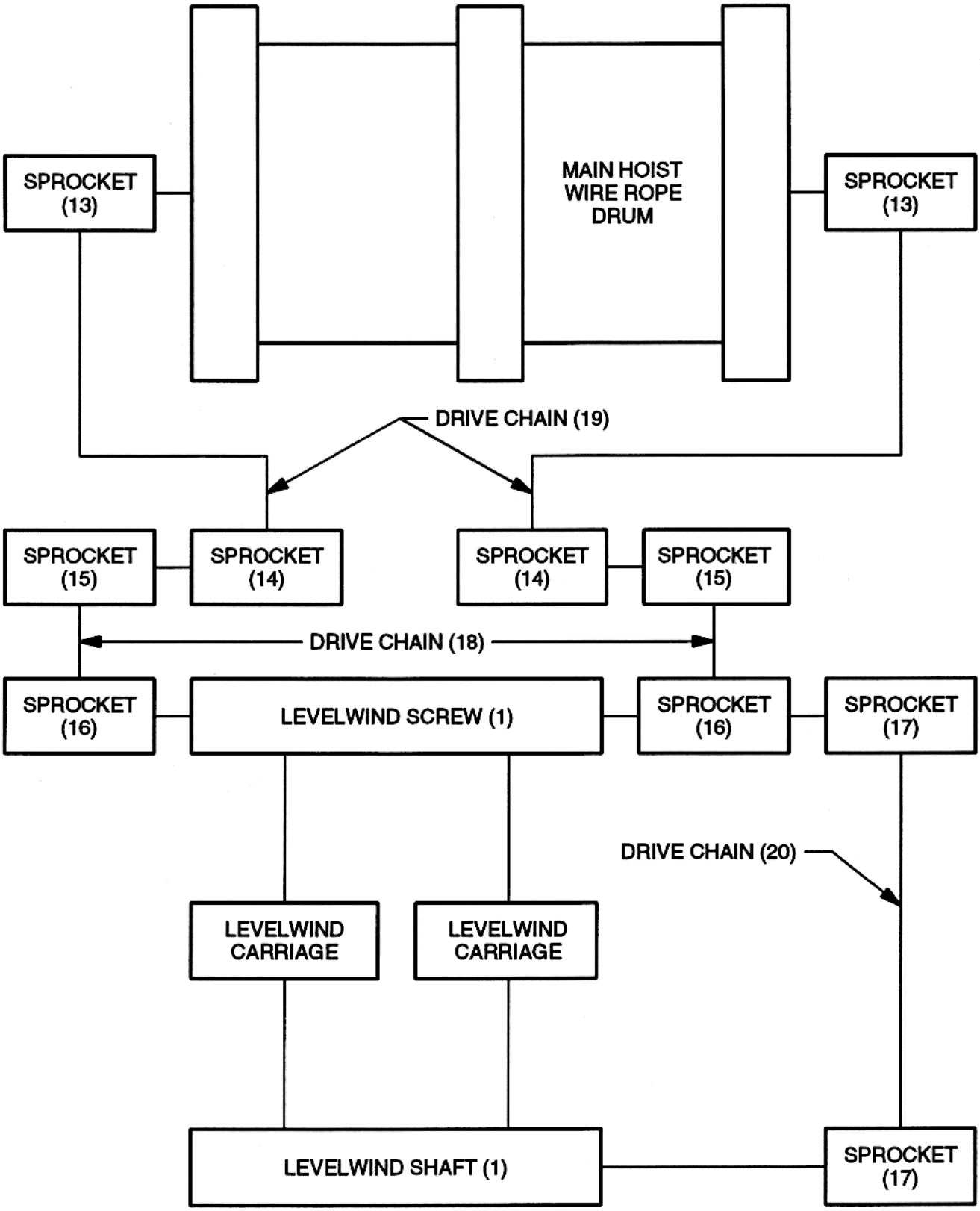

Figure 13. Main Hoist Levelwind Mechanical FMEA Diagram

Table 5. **Mechanical FMEA - Main Hoist Levelwind Assembly**

System/Subsystem: 325 Ton Bridge Cranes at the Vehicle Assembly Building High Bays 1/2/3/4 / Levelwind Assembly
PMN: H72-1200-01, -02

Drawing No.: F-10482/A
Reference Figure: Figure 13

Find No. Part No.	Part Name	Part Function	a. Failure Mode b. Cause c. FMN d. Detection Method e. Correcting Action f. Time to Effect g. Timeframe	Failure Effect On System Performance	Failure Effect On Vehicle Systems And/Or Personnel Safety	Crit Cat
13	Sprocket	Transmits torque from hoist drum shaft to drive chain	Disengages	No effect. Drive on opposite end of levelwind will continue to drive levelwind.	No effect.	3
18, 19	Drive Chain	Transmits force from sprocket to sprocket	Disengages	No effect. Drive on opposite end of levelwind will continue to drive levelwind.	No effect.	3
14, 15	Sprocket	Transmits torque from drive chain to drive chain	Disengages	No effect. Drive on opposite end of levelwind will continue to drive levelwind.	No effect.	3
16	Sprocket	Transmits torque from drive chain to levelwind screw	Disengages	No effect. Drive on opposite end of levelwind will continue to drive levelwind.	No effect.	3
17	Sprocket	Transmits torque from levelwind screw to drive chain	Disengages	Loss of drive to levelwind shaft. Levelwind carriages(s) will bind and not move. Limit switches on levelwind will signal PLC when improper spooling occurs. PLC will shut down hoist and prevent further movement.	No effect.	3
20	Drive Chain	Transmits force from sprocket (17) to sprocket (17)	Disengages	Loss of drive to levelwind shaft. Levelwind carriages(s) will bind and not move. Limit switches on levelwind will signal PLC when improper spooling occurs. PLC will shut down hoist and prevent further movement.	No effect.	3
1	Levelwind (screw, carriage and shaft)	Guides wire rope to ensure proper spooling on wire rope drum.	Seizes	Wire rope will trip one or more limit switches mounted on the levelwind assembly. Computer controller will shut down main hoist to prevent damage to system.	No effect.	3

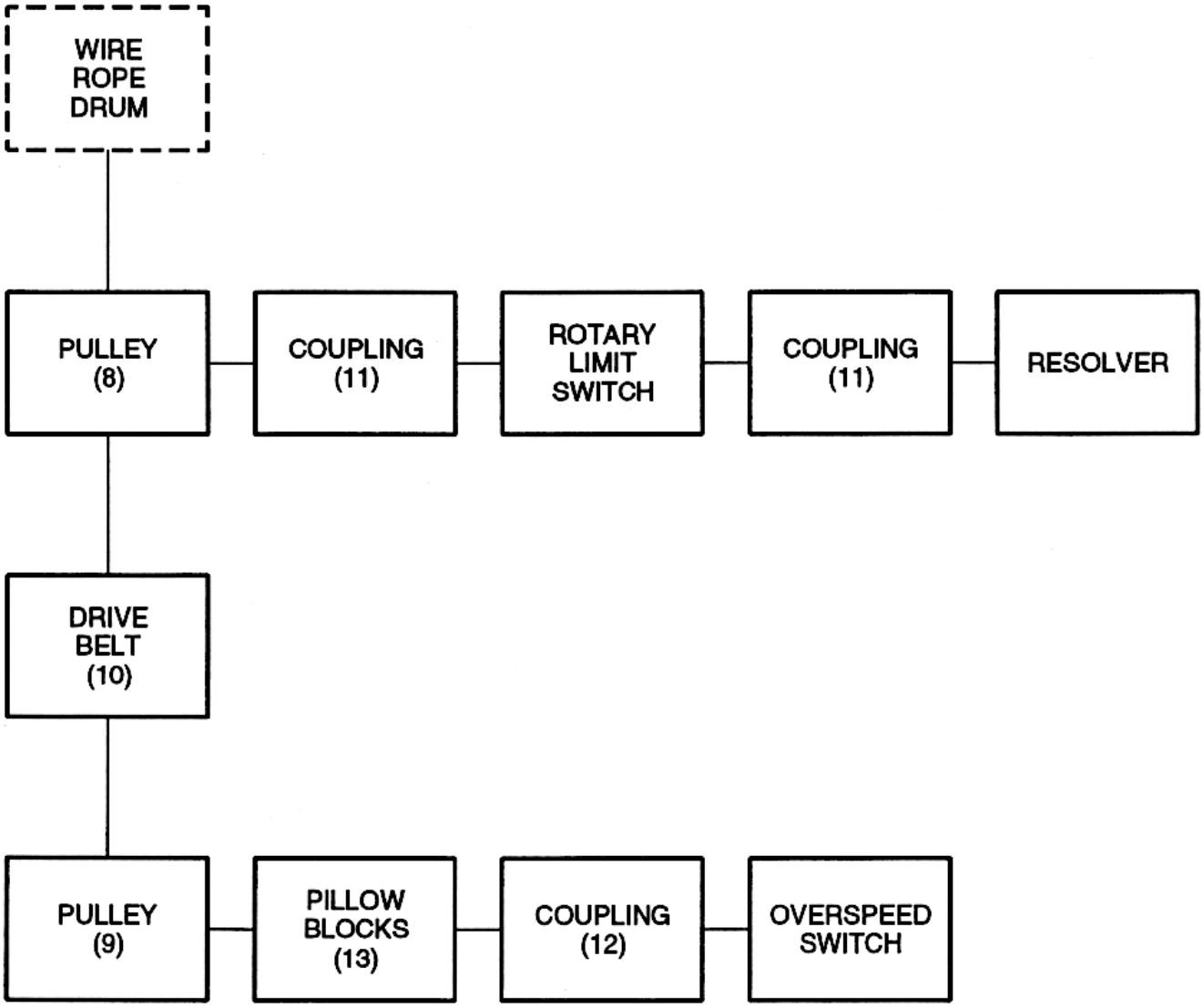

Figure 14. Main Hoist Limit Switch / Overspeed FMEA Diagram

Table 6. **Mechanical FMEA - Main Hoist Limit Switch / Overspeed Assembly**

System/Subsystem: 325 Ton Bridge Cranes at the Vehicle Assembly Building High Bays 1/2/3/4 / Limit Switch / Overspeed Assembly
PMN: H72-1200-01, -02

Drawing No.: A-15056
Reference Figure: Figure 14

Find No. Part No.	Part Name	Part Function	a. Failure Mode b. Cause c. FMN d. Detection Method e. Correcting Action f. Time to Effect g. Timeframe	Failure Effect On System Performance	Failure Effect On Vehicle Systems And/Or Personnel Safety	Crit Cat
8	Pulley	Transmits torque from hoist drum shaft to drive belt	Disengages	Loss of overspeed protection from centrifugal limit switch. Computer controller will detect overspeed conditions. Requires previous failure to cause overspeed.	No effect.	3
11	Coupling	Transmits torque from hoist drum shaft to rotary limit switch and resolver	Disengages	Loss of limit switch protection and resolver feedback. Computer controller will detect loss of resolver feedback and disable hoist.	No effect.	3
None	Rotary Limit Switch	Sends signal when hoist drum shaft has rotated a preset number of turns	Fails to operate	Loss of limit switch protection. PLC position from resolver feedback and observers will prevent load block from reaching floor.	No effect.	3
None	Resolver	Shifts phase of input signal proportional to position of hoist drum shaft	Fails to operate	Loss of resolver feedback. Computer controller will detect loss of resolver feedback and disable hoist.	No effect.	3
10	Drive Belt	Transmits force from pulley to pulley	Disengages	Loss of overspeed protection from centrifugal limit switch. Computer controller will detect overspeed conditions. Requires previous failure to cause overspeed.	No effect.	3
9	Pulley	Transmits force from drive belt to pulley	Disengages	Loss of overspeed protection from centrifugal limit switch. Computer controller will detect overspeed conditions. Requires previous failure to cause overspeed.	No effect.	3

Table 6. **Mechanical FMEA - Main Hoist Limit Switch / Overspeed Assembly**

System/Subsystem: 325 Ton Bridge Cranes at the Vehicle Assembly Building High Bays 1/2/3/4 / Limit Switch / Overspeed Assembly
PMN: H72-1200-01, -02

Drawing No.: A-15056
Reference Figure: Figure 14

Find No. Part No.	Part Name	Part Function	a. Failure Mode b. Cause c. FMN d. Detection Method e. Correcting Action f. Time to Effect g. Timeframe	Failure Effect On System Performance	Failure Effect On Vehicle Systems And/Or Personnel Safety	Crit Cat
13	Pillow Block	Provides tension on drive belt while allowing shaft to rotate freely	Seizes	Loss of overspeed protection from centrifugal limit switch. Computer controller will detect overspeed conditions. Requires previous failure to cause overspeed.	No effect.	3
12	Coupling	Transmit torque from pulley shaft to centrifugal overspeed switch	Disengages	Loss of overspeed protection from centrifugal limit switch. Computer controller will detect overspeed conditions. Requires previous failure to cause overspeed.	No effect.	3
None	Overspeed Switch	Sends signal when input shaft speed exceeds a preset RPM	Fails to operate	Loss of overspeed protection from centrifugal limit switch. Computer controller will detect overspeed conditions. Requires previous failure to cause overspeed.	No effect.	3

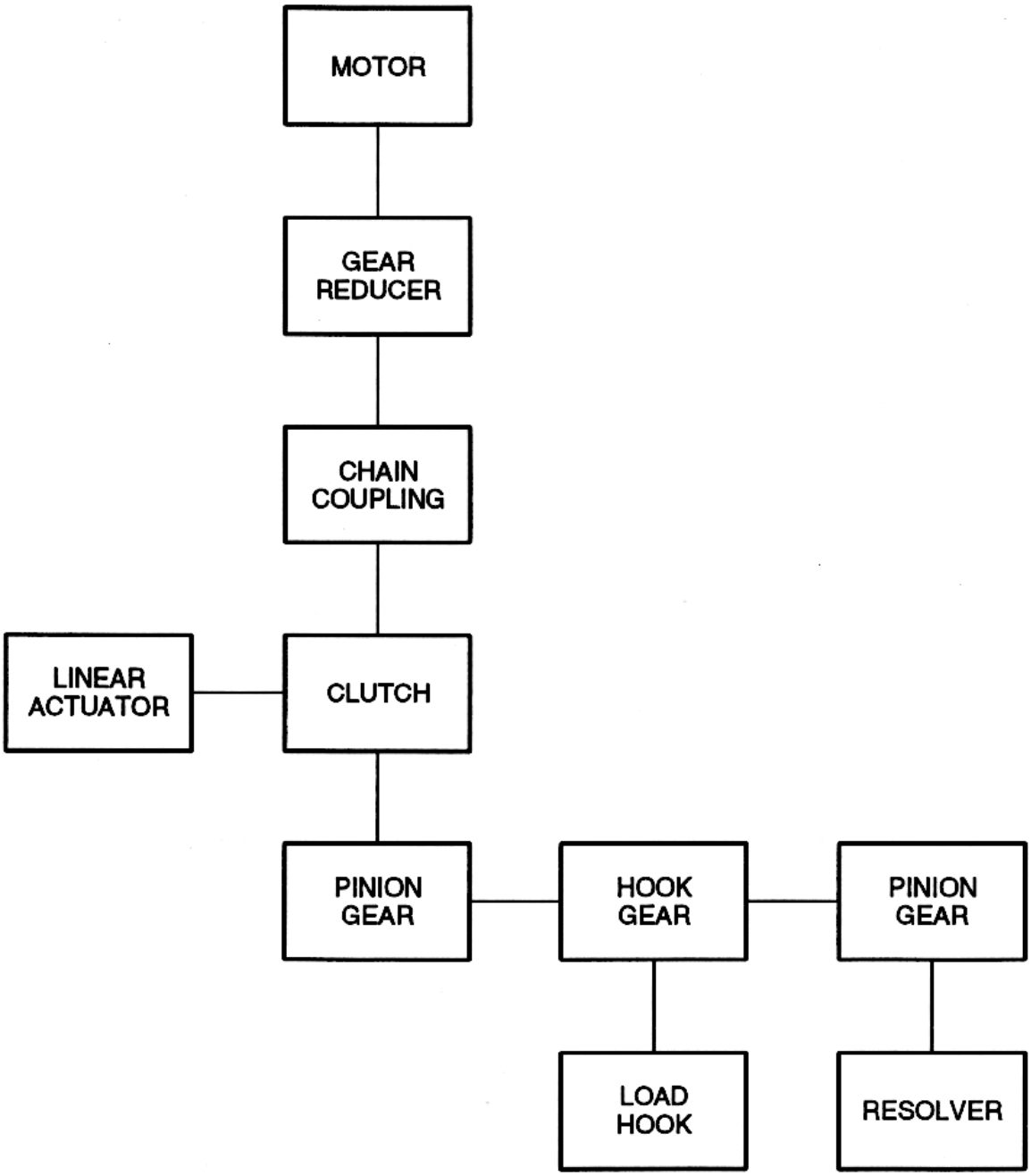

Figure 15. Main Hoist Hook Rotation FMEA Diagram

Table 7. **Mechanical FMEA - Main Hoist Hook Rotation**

System/Subsystem: 325 Ton Bridge Cranes at the Vehicle Assembly Building High Bays 1/2/3/4 / Hook Rotation Drive
PMN: H72-1200-01, -02
Drawing No.: B-18675
Reference Figure: Figure 15

Find No. Part No.	Part Name	Part Function	a. Failure Mode b. Cause c. FMN d. Detection Method e. Correcting Action f. Time to Effect g. Timeframe	Failure Effect On System Performance	Failure Effect On Vehicle Systems And/Or Personnel Safety	Crit Cat
None	Motor	Provides torque to rotate load	Fails to operate	Unable to rotate load. Computer controller will detect error between actual motion and motion commanded and shut down rotation drive.	No effect.	3
None	Gear Reducer	Transmits torque from electric motor to chain coupling	Disengages	Unable to rotate load. Computer controller will detect error between actual motion and motion commanded and shut down rotation drive.	No effect.	3
			Seizes	Unable to rotate load. Computer controller will detect error between actual motion and motion commanded and shut down rotation drive.	No effect.	3
None	Chain Coupling	Transmits torque from gear reducer to clutch	Disengages	Unable to rotate load. Computer controller will detect error between actual motion and motion commanded and shut down rotation drive.	No effect.	3
None	Clutch	Disengages rotation drive from hook to allow free rotation of hook	Disengages	Unable to rotate load. Computer controller will detect error between actual motion and motion commanded and shut down rotation drive.	No effect.	3
			Fails to operate	Unable to freely rotate hook. Delay in operations.	No effect.	3
None	Linear Actuator	Provides force to engage or disengage clutch	Fails to operate	Unable to engage or disengage load hook Rotation Drive. Delay in operation.	No effect.	3

Table 7. **Mechanical FMEA - Main Hoist Hook Rotation**

System/Subsystem: 325 Ton Bridge Cranes at the Vehicle Assembly Building High Bays 1/2/3/4 / Hook Rotation Drive
PMN: H72-1200-01, -02
Drawing No.: B-18675
Reference Figure: Figure 15

Find No. Part No.	Part Name	Part Function	a. Failure Mode b. Cause c. FMN d. Detection Method e. Correcting Action f. Time to Effect g. Timeframe	Failure Effect On System Performance	Failure Effect On Vehicle Systems And/Or Personnel Safety	Crit Cat
7	Pinion Gear	Transmits torque from clutch to hook gear	Disengages	Unable to rotate load. Computer controller will detect error between actual motion and motion commanded and shut down rotation drive.	No effect.	3
None	Hook Gear	Transmits torque from pinion gear to load hook	Disengages	Unable to rotate load. Computer controller will detect error between actual motion and motion commanded and shut down rotation drive.	No effect.	3
None	Gear	Transmits torque from load hook gear to input of resolver	Disengages	Loss of resolver feedback. Computer controller will detect error between actual motion and motion commanded and shut down rotation drive.	No effect.	3
None	Resolver	Shifts phase of input signal proportional to position of load hook	Fails to operate	Loss of resolver feedback. Computer controller will detect error between actual motion and motion commanded and shut down rotation drive.	No effect.	3

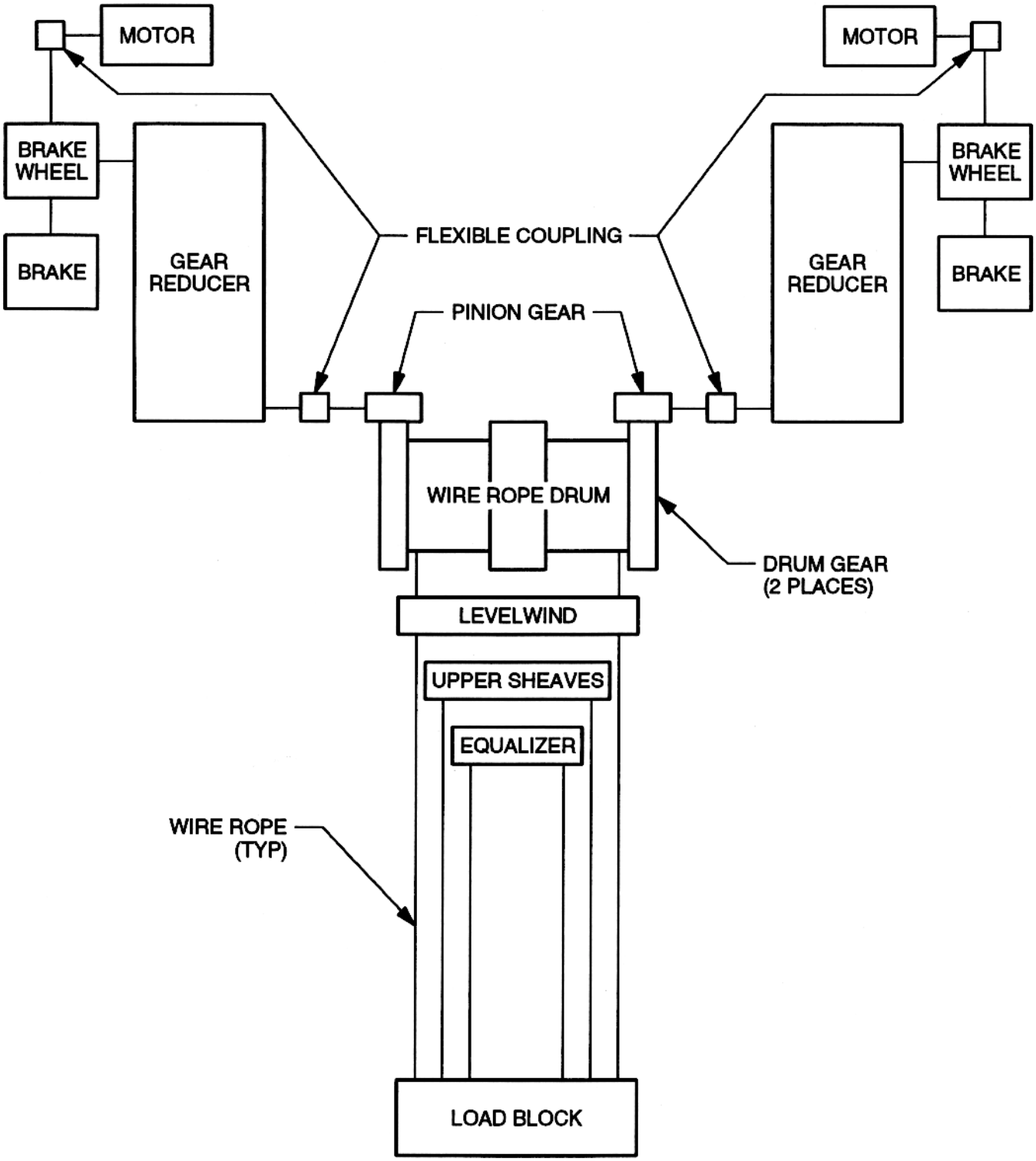

Figure 16. Auxilary Hoist Mechanical FMEA Diagram

Table 8. **Mechanical FMEA - Auxiliary Hoist Assembly**

System/Subsystem: 325 Ton Bridge Cranes at the Vehicle Assembly Building High Bays 1/2/3/4 / Auxiliary Hoist Assembly
PMN: H72-1200-01, -02

Drawing No.: A-14877
Reference Figure: Figure 16

Find No. Part No.	Part Name	Part Function	a. Failure Mode b. Cause c. FMN d. Detection Method e. Correcting Action f. Time to Effect g. Timeframe	Failure Effect On System Performance	Failure Effect On Vehicle Systems And/Or Personnel Safety	Crit Cat
1 1202HLE	Hoist Gear Reducer	Transmits torque from DC electric motor and electric brake to pinion gear coupling	a. Gear Disengages b. Structural Failure c. 09FY120-001.007 d. Visual e. None f. Immediate g. NA	Loss of ability for associated motor to control load and for associated brake to hold load. Opposite load path will maintain control of the load. Computer controller will detect load imbalance and disable hoist.	Requires failure in opposite load path to loose control of the load. Could cause loss of life and/or vehicle.	1R
			Seizes	Gear reducer will prevent hoist motor and hoist drum from rotating. Motor control modules will limit output current to motors. Computer controller will detect following error and disable hoist. Delay in operations.	No effect.	3
2 KOP-FLEX 4 ½ HM	Pinion Gear Coupling	Transmits torque from hoist gear reducer output shaft to drum gear	a. Key Disengages b. Structural Failure c. 09FY120-001.008 d. Visual e. None f. Immediate g. NA	Loss of ability for associated motor to control load and for associated brake to hold load. Opposite load path will maintain control of the load. Computer controller will detect load imbalance or following error and disable hoist.	Requires failure in opposite load path to loose control of the load. Could cause loss of life and/or vehicle.	1R
4	Hoist Drum Pillow Block Bearing	Support and hold hoist drum shaft in place while allowing it to rotate freely	Bearing seizes	Hoist drum will cease to rotate. Motor control modules will limit output current. Computer controller will detect following error and disable hoist. Delay in operations.	No effect.	3
7	Pinion Gear Pillow Block Bearing	Support and hold hoist pinion gear shaft in place while allowing it to rotate freely.	Bearing seizes	Hoist drum will cease to rotate. Motor control modules will limit output current. Computer controller will detect following error and disable hoist. Delay in operations.	No effect.	3

Find No. Part No.	Part Name	Part Function	a. Failure Mode b. Cause c. FMN d. Detection Method e. Correcting Action f. Time to Effect g. Timeframe	Failure Effect On System Performance	Failure Effect On Vehicle Systems And/Or Personnel Safety	Crit Cat
6 C-24290	Hoist Brake Wheel	Provides torque to hold load when hoist drive is de-energized	a. Key Disengages b. Structural Failure c. 09FY120-001.009 d. Visual e. None f. Immediate g. NA	Loss of ability for brake to hold load. Opposite load path will maintain control of the load. Computer controller will detect encoder error or load imbalance when opposite drive takes up backlash and torsional deflection. Computer controller will disable hoist.	Requires failure in opposite load path to loose control of the load. Could cause loss of life and/or vehicle.	1R
None DS9528A103	Hoist Electric Brake	Provides torque to hold load when hoist drive is de-energized	a. Fails to set b. Stuck mechanism, worn or glazed shoes c. 09FY120-001.010 d. Visual e. None f. Immediate g. NA	Loss of ability for brake to hold load. Opposite load path will maintain control of the load. Computer controller will detect encoder error or load imbalance when opposite drive takes up backlash and torsional deflection. Computer controller will disable hoist.	Requires failure in opposite load path to loose control of the load. Could cause loss of life and/or vehicle.	1R
			Fails to release	Motors will attempt to drive through brake. Computer controller will detect following error or load imbalance and disable hoist.	No effect.	3
3	Motor Output Coupling	Transmits torque from electric motor to gear reducer input shaft	Disengages	Loss of ability for associated motor to control load. Brake and opposite load path will maintain control of the load. Computer controller will detect load imbalance and disable hoist.	No effect.	3
None	Hoist DC Electric Motor	Provides torque to raise, hold and lower load	Fails to operate	Torque proving will not be successful. Hoist will not operate. Operator can switch to single drive operation if only one motor (East or west) has failed.	No effect.	3

Find No. Part No.	Part Name	Part Function	a. Failure Mode b. Cause c. FMN d. Detection Method e. Correcting Action f. Time to Effect g. Timeframe	Failure Effect On System Performance	Failure Effect On Vehicle Systems And/Or Personnel Safety	Crit Cat
9 C-24613	Pinion Gear	Transmits torque from hoist gear reducer to drum gear	a. Gear Disengages b. Structural Failure c. 09FY120-001.011 d. Visual e. None f. Immediate g. NA	Loss of ability for associated motor to control load and for associated brake to hold load. Opposite load path will maintain control of the load. Computer controller will detect load imbalance or encoder error and disable hoist.	Requires failure in opposite load path to loose control of the load. Could cause loss of life and/or vehicle.	1R
13 C-24204	Drum Gear	Transmits torque from hoist gear reducer to hoist wire rope drum	a. Gear Disengages b. Structural Failure c. 09FY120-001.012 d. Visual e. None f. Immediate g. NA	Loss of ability for associated motor to control load and for associated brake to hold load. Opposite load path will maintain control of the load. Computer controller will detect load imbalance or encoder error and disable hoist.	Requires failure in opposite load path to loose control of the load. Could cause loss of life and/or vehicle.	1R

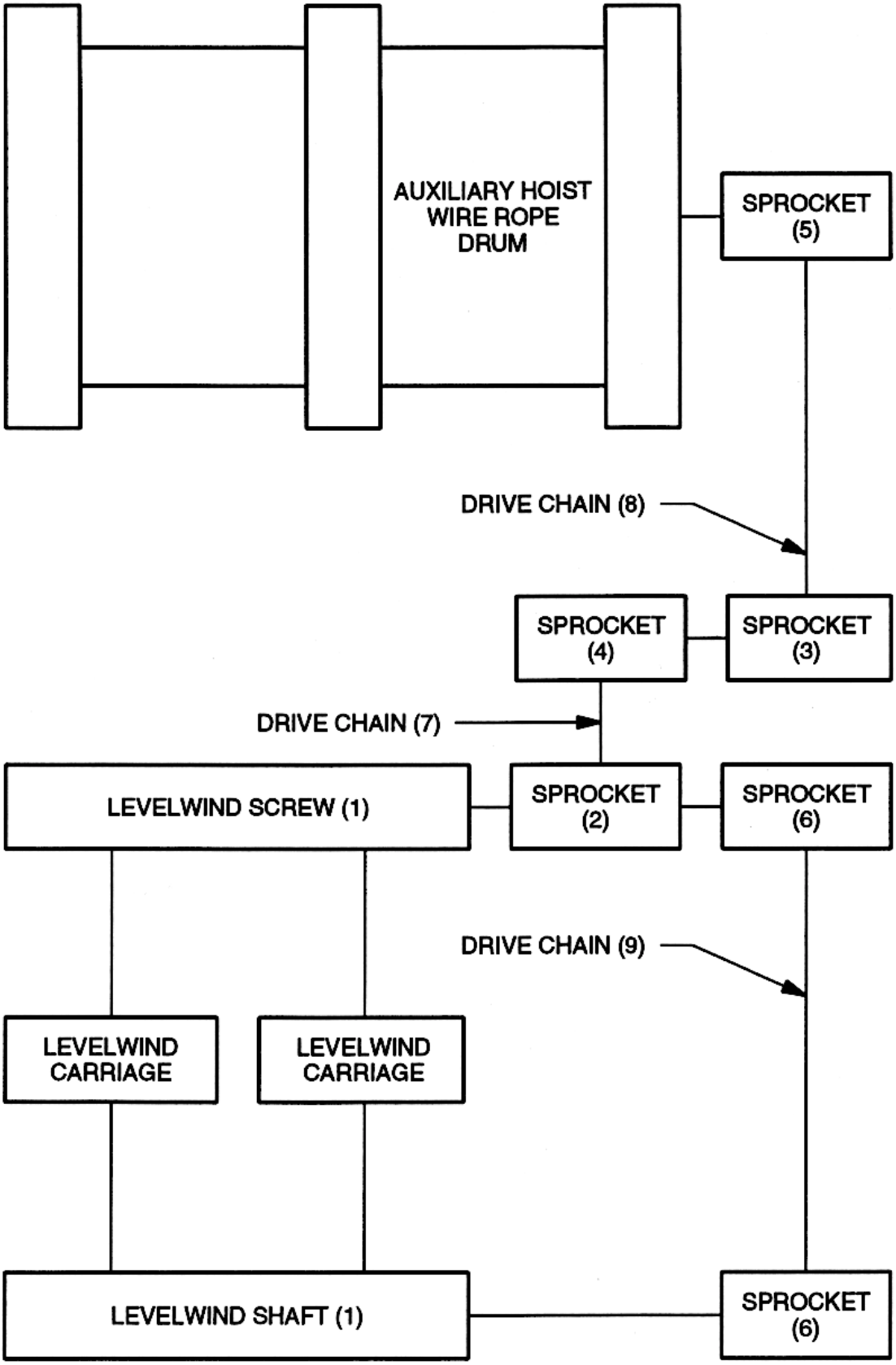

Figure 17. Auxilary Hoist Levelwind Mechanical FMEA Diagram

Table 9. **Mechanical FMEA - Auxiliary Hoist Levelwind Assembly**

System/Subsystem: 325 Ton Bridge Cranes at the Vehicle Assembly Building High Bays 1/2/3/4 / Auxiliary Hoist Levelwind Assembly
PMN: H72-1200-01, -02

Drawing No.: A-14983
Reference Figure: Figure 17

Find No. Part No.	Part Name	Part Function	a. Failure Mode b. Cause c. FMN d. Detection Method e. Correcting Action f. Time to Effect g. Timeframe	Failure Effect On System Performance	Failure Effect On Vehicle Systems And/Or Personnel Safety	Crit Cat
5	Sprocket	Transmit torque from hoist drum shaft to drive chain	Disengages	Loss of drive to levelwind. Limit switches on levelwind will signal PLC when improper spooling occurs. PLC will shut down hoist and prevent further movement.	No effect.	3
8, 7	Drive Chain	Transmits force from sprocket to sprocket	Disengages	Loss of drive to levelwind. Limit switches on levelwind will signal PLC when improper spooling occurs. PLC will shut down hoist and prevent further movement.	No effect.	3
3, 4	Sprocket	Transmits torque from drive chain (8) to drive chain (7)	Disengages	Loss of drive to levelwind. Limit switches on levelwind will signal PLC when improper spooling occurs. PLC will shut down hoist and prevent further movement.	No effect.	3
2	Sprocket	Transmits torque from drive chain (7) to levelwind	Disengages	Loss of drive to levelwind. Limit switches on levelwind will signal PLC when improper spooling occurs. PLC will shut down hoist and prevent further movement.	No effect.	3
6	Sprocket	Transmits torque from levelwind screw to drive chain	Disengages	Loss of drive to levelwind shaft. Levelwind carriage(s) will bind and not move. Limit switches on levelwind will signal PLC when improper spooling occurs. PLC will shut down hoist and prevent further movement.	No effect.	3

Table 9. **Mechanical FMEA - Auxiliary Hoist Levelwind Assembly**

System/Subsystem: 325 Ton Bridge Cranes at the Vehicle Assembly Building High Bays 1/2/3/4 / Auxiliary Hoist Levelwind Assembly
PMN: H72-1200-01, -02

Drawing No.: A-14983
Reference Figure: Figure 17

Find No. Part No.	Part Name	Part Function	a. Failure Mode b. Cause c. FMN d. Detection Method e. Correcting Action f. Time to Effect g. Timeframe	Failure Effect On System Performance	Failure Effect On Vehicle Systems And/Or Personnel Safety	Crit Cat
9	Drive Chain	Transmits Torque from sprocket (6) to sprocket (6)	Disengages	Loss of drive to levelwind shaft. Levelwind carriage(s) will bind and not move. Limit switches on levelwind will signal PLC when improper spooling occurs. PLC will shut down hoist and prevent further movement.	No effect.	3
1	Levelwind (Screw and Carriage)	Guides wire rope to ensure proper spooling on wire rope drum	Seizes	Wire rope will trip one or more limit switches mounted on the levelwind assembly. Computer will shut down hoist and prevent further movement.	No effect.	3

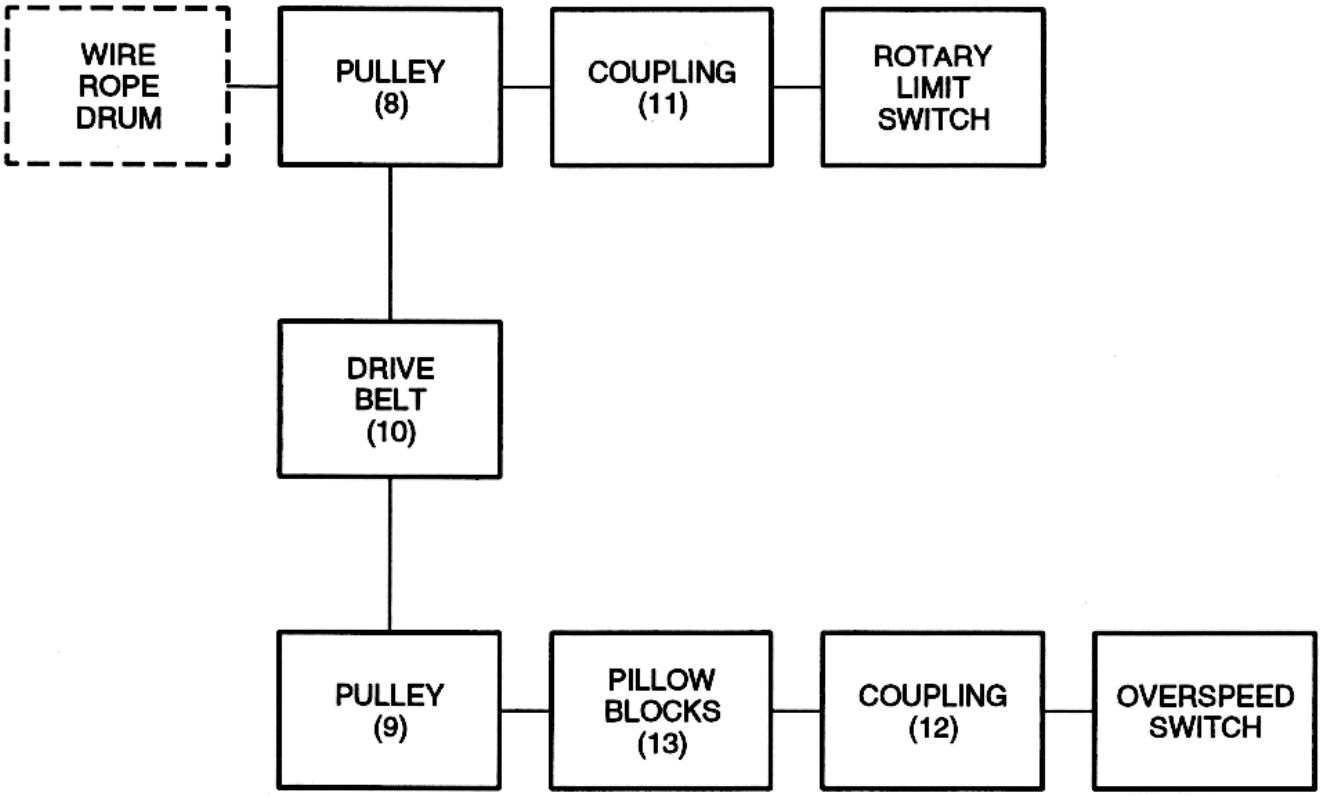

Figure 18. Auxilary Hoist limit Switch / Overspeed Mechanical FMEA Diagram

Table 10. **Mechanical FMEA - Auxiliary Hoist Limit Switch / Overspeed Assembly**

System/Subsystem: 325 Ton Bridge Cranes at the Vehicle Assembly Building High Bays 1/2/3/4 / Limit Switch / Overspeed Assembly
PMN: H72-1200-01, -02

Drawing No.: A15057
Reference Figure: Figure 18

Find No. Part No.	Part Name	Part Function	a. Failure Mode b. Cause c. FMN d. Detection Method e. Correcting Action f. Time to Effect g. Timeframe	Failure Effect On System Performance	Failure Effect On Vehicle Systems And/Or Personnel Safety	Crit Cat
8	Pulley	Transmits torque from hoist drum shaft to drive belt	Disengages	Loss of overspeed protection from centrifugal limit switch. Computer controller will detect overspeed conditions and set brakes. Requires previous failure to cause overspeed.	No effect.	3
11	Coupling	Transmits torque from hoist drum shaft to rotary limit switch	Disengages	Loss of lower limit switch protection. PLC position from resolver feedback and observers will protect load block from reaching floor.	No effect.	3
None	Rotary Limit Switch	Sends signal when hoist drum shaft has rotated a preset number of turns	Gears Disengage	Loss of lower limit switch protection. Computer controller will detect overspeed conditions and set brakes. Requires previous failure to cause overspeed.	No effect.	3
10	Drive Belt	Transmits force from pulley to pulley	a. Disengage b. Component failure c. None d. Visual e. Operator press E-Stop f. 5 Seconds g. 2 Seconds	Loss of overspeed protection from centrifugal limit switch. Observers will detect overspeed conditions. Requires previous failure to cause overspeed.	No effect.	3
9	Pulley	Transmits torque from drive belt to pulley	Disengages	Loss of overspeed protection from centrifugal limit switch. Computer controller will detect overspeed conditions and set brakes. Requires previous failure to cause overspeed.	No effect.	3

Find No. Part No.	Part Name	Part Function	a. Failure Mode b. Cause c. FMN d. Detection Method e. Correcting Action f. Time to Effect g. Timeframe	Failure Effect On System Performance	Failure Effect On Vehicle Systems And/Or Personnel Safety	Crit Cat
13	Pillow Block	Provides tension on drive belt while allowing shaft to rotate freely	Seizes	Loss of overspeed protection from centrifugal limit switch. Computer controller will detect overspeed conditions and set brakes. Requires previous failure to cause overspeed.	No effect.	3
12	Coupling	Transmit torque from pulley shaft to centrifugal overspeed switch	Disengages	Loss of overspeed protection from centrifugal limit switch. Computer controller will detect overspeed conditions and set brakes. Requires previous failure to cause overspeed.	No effect.	3
None	Overspeed Switch	Sends signal when input shaft speed exceeds a preset RPM	Fails to operate	Loss of overspeed protection from centrifugal limit switch. Computer controller will detect overspeed conditions and set brakes. Requires previous failure to cause overspeed.	No effect.	3

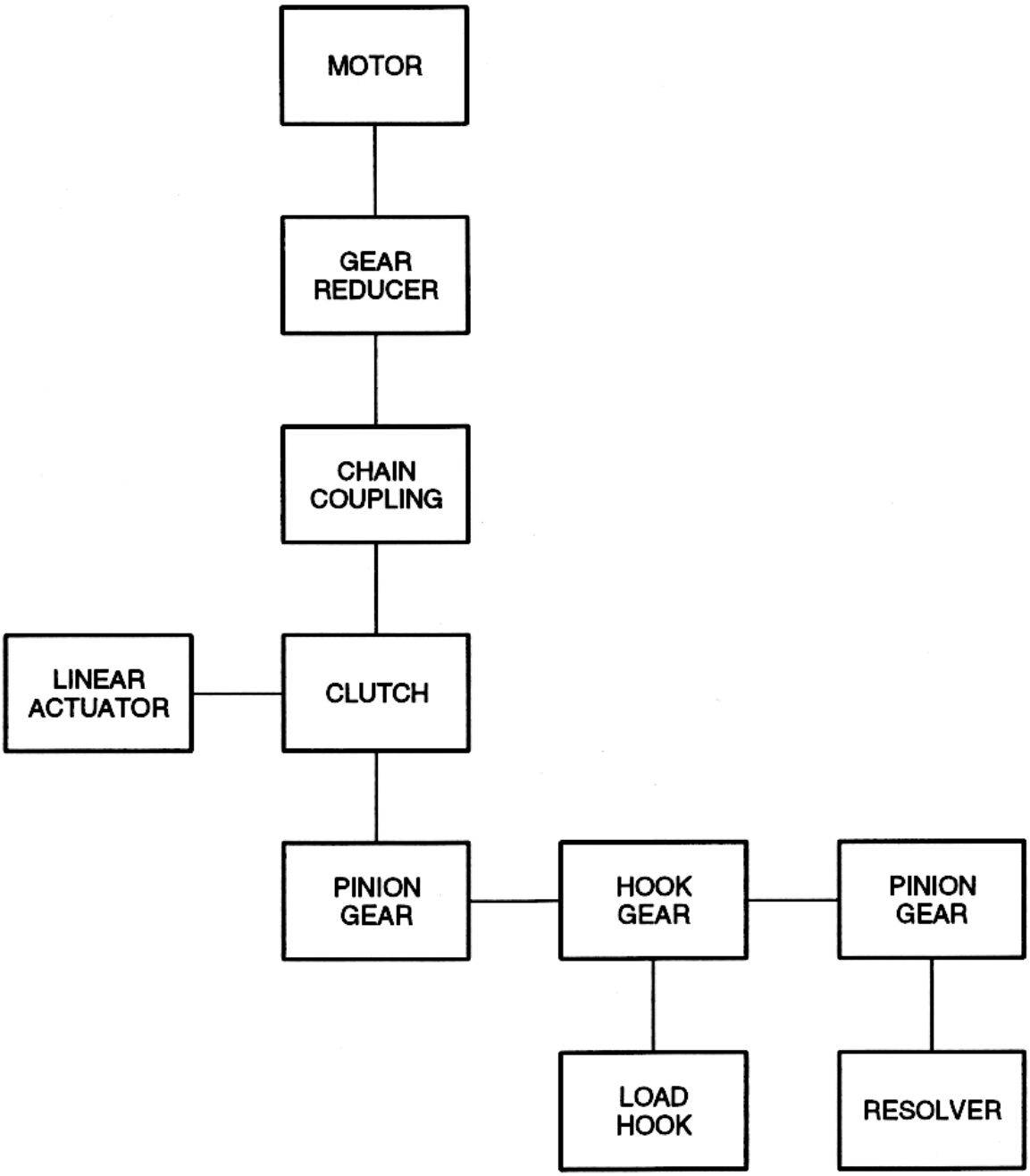

Figure 19. Auxilary Hoist Hook Rotation FMEA Diagram

Table 11. **Mechanical FMEA - Auxiliary Hoist Hook Rotation**

System/Subsystem: 325 Ton Bridge Cranes at the Vehicle Assembly Building High Bays 1/2/3/4 / Hook Rotation Drive
PMN: H72-1200-01, -02

Drawing No.: A-15021
Reference Figure: Figure 19

Find No. Part No.	Part Name	Part Function	a. Failure Mode b. Cause c. FMN d. Detection Method e. Correcting Action f. Time to Effect g. Timeframe	Failure Effect On System Performance	Failure Effect On Vehicle Systems And/Or Personnel Safety	Crit Cat
None	Motor	Provides torque to rotate load	Fails to operate	Unable to rotate load. Computer controller will detect error between actual motion and motion commanded and shut down rotation drive.	No effect.	3
18	Gear Reducer	Transmits torque from electric motor to chain coupling	Disengages	Unable to rotate load. Computer controller will detect error between actual motion and motion commanded and shut down rotation drive.	No effect.	3
None	Chain Coupling	Transmits torque from gear reducer to clutch	Disengages	Unable to rotate load. Computer controller will detect error between actual motion and motion commanded and shut down rotation drive.	No effect.	3
None	Clutch	Disengages rotation drive from hook to allow free rotation of hook	Disengages	Unable to rotate load. Computer controller will detect error between actual motion and motion commanded and shut down rotation drive.	No effect.	3
			Fails to release	Unable to freely rotate load. Delay in operations.	No effect.	3
None	Linear Actuator	Provides force to engage or disengage clutch	Fails to operate	Unable to engage or disengage load hook rotation drive. Delay in operations.	No effect.	3
5	Pinion Gear	Transmits torque from clutch to hook gear	Disengages	Unable to rotate load. Computer controller will detect error between actual motion and motion commanded and shut down rotation drive.	No effect.	3

Find No. Part No.	Part Name	Part Function	a. Failure Mode b. Cause c. FMN d. Detection Method e. Correcting Action f. Time to Effect g. Timeframe	Failure Effect On System Performance	Failure Effect On Vehicle Systems And/Or Personnel Safety	Crit Cat
None	Hook Gear	Transmits torque from Pinion Gear to Load Hook	Disengages	Unable to rotate load. Computer controller will detect error between actual motion and motion commanded and shut down rotation drive.	No effect.	3
6	Gear	Transmits torque from Load Hook Gear to input of resolver	Disengages	Loss of resolver feedback. Computer controller will detect error between actual motion and motion commanded and shut down rotation drive.	No effect.	3
None	Resolver	Shifts phase of input signal proportional to position of Load Hook	Fails to operate	Loss of resolver feedback. Computer controller will detect error between actual motion and motion commanded and shut down rotation drive.	No effect.	3

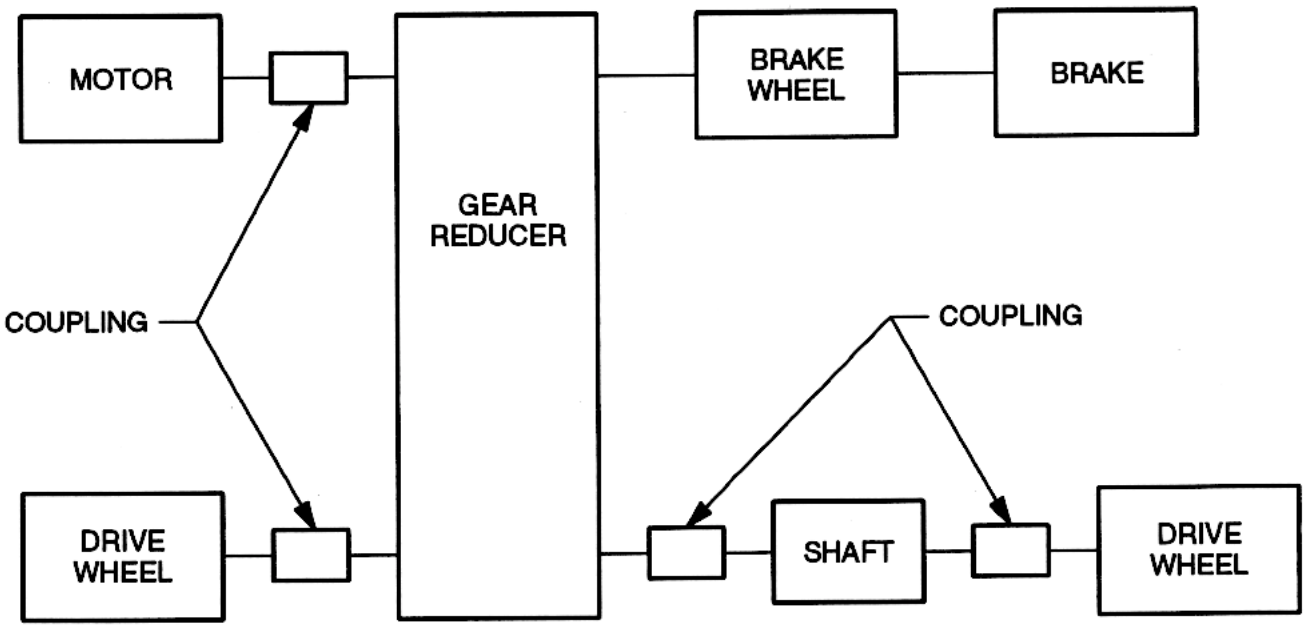

Figure 20. Trolley Mechanical FMEA Diagram (North and South Drives)

Table 12. **Mechanical FMEA - Trolley Assembly**

System/Subsystem: 325 Ton Bridge Cranes at the Vehicle Assembly Building High Bays 1/2/3/4 / Trolley Assembly
PMN: H72-1200-01, -02

Drawing No.: A-14809
Reference Figure: Figure 20

Find No. Part No.	Part Name	Part Function	a. Failure Mode b. Cause c. FMN d. Detection Method e. Correcting Action f. Time to Effect g. Timeframe	Failure Effect On System Performance	Failure Effect On Vehicle Systems And/Or Personnel Safety	Crit Cat
None	Drive Wheel Assembly	Converts torque from gear reducer to linear motion to move trolley assembly	Seizes	Loss of ability to move trolley. Delay in operations.	No effect.	3
3	Gear Reducer	Transmits torque from DC electric motor and electric brake to Drive Wheel Assemblies	Disengages	Loss of mechanical load on one of the two drive motors. Computer controller will detect following error or encoder error and shut down trolley drive.	No effect.	3
			Seizes	Loss of ability to move trolley. Delay in operations.	No effect.	3
None	Electric Motor	Converts electrical energy to mechanical energy to move Trolley assembly	Fails to operate	Loss of power to one set of drive wheel assemblies. Trolley will attempt to operate on single motor. Continued use will trip motor overload, shutting down drive. Trolley drive wheels will slip causing following error or encoder error shutting down drive.	No effect.	3
4	Brake Wheel	Transmits force from Gear Reducer to brake mechanism	Disengages	Loss of ability for trolley north (or south) brake to stop and hold trolley. Opposite brake will stop and hold Trolley.	No effect.	3
None	Brake	Provides force to stop and hold Trolley.	Fails to set	Loss of ability for Trolley North (or South) brake to stop and hold Trolley. Opposite brake will stop and hold Trolley.	No effect.	3

Find No. Part No.	Part Name	Part Function	a. Failure Mode b. Cause c. FMN d. Detection Method e. Correcting Action f. Time to Effect g. Timeframe	Failure Effect On System Performance	Failure Effect On Vehicle Systems And/Or Personnel Safety	Crit Cat
			Fails to release	Motor will attempt to drive through brake. Continued use will trip motor overload, shutting down drive. Trolley drive wheels will slip causing following error or encoder error, shutting down drive.	No effect.	3

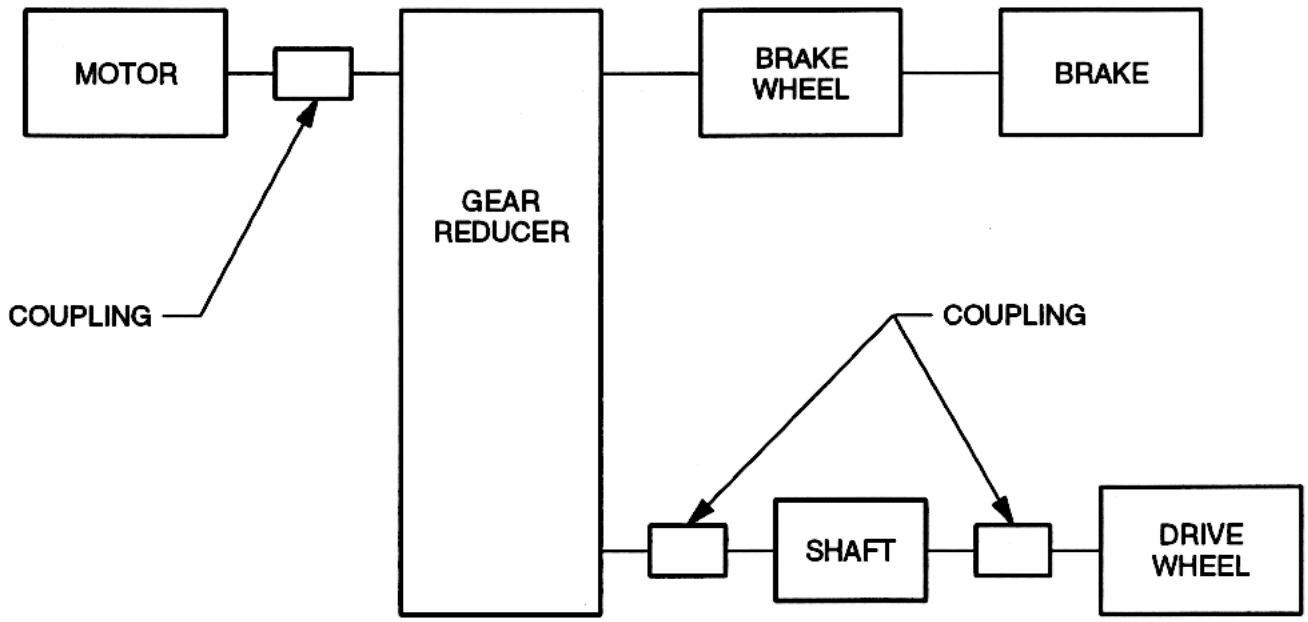

(1 OF 2 BRIDGE ENDS)

Figure 21. Bridge Mechanical FMEA Diagram (NorthEast and Northwest Drives)

Table 13. **Mechanical FMEA - Bridge Assembly**

System/Subsystem: 325 Ton Bridge Cranes at the Vehicle Assembly Building High Bays 1/2/3/4 / Bridge Assembly
PMN: H72-1200-01, -02

Drawing No.: A-14878/A
Reference Figure: Figure 21

Find No. Part No.	Part Name	Part Function	a. Failure Mode b. Cause c. FMN d. Detection Method e. Correcting Action f. Time to Effect g. Timeframe	Failure Effect On System Performance	Failure Effect On Vehicle Systems And/Or Personnel Safety	Crit Cat
None	Drive Wheel Assembly	Converts torque from Gear Reducer to linear motion to move Bridge Assembly	Seizes	Loss of ability to move bridge. Delay in operations.	No effect.	3
3	Gear Reducer	Transmits torque from DC electric motor and electric brake to Drive Wheels Assemblies	Disengages	Loss of mechanical load on one of the four Drive Motors. Computer controller will detect following error or encoder error and shut down Bridge Drives.	No effect.	3
			Seizes	Loss of ability to move Bridge. Delay in operations.	No effect.	3
None	Electric Motor	Converts electrical energy to mechanical energy to move Bridge Assembly.	Fails to operate	Loss of power to one Drive Wheel Assembly. Computer controller will detect following error or encoder error and shut down Bridge Drives.	No effect.	3
5	Brake Wheel	Transmits force from Gear Reducer to Brake mechanism	Disengages	Loss of ability for brake to stop and hold Bridge. Three remaining brakes will stop and hold Bridge.	No effect.	3
None	Brake	Provides force to stop and hold Bridge	Fails to set	Loss of ability for brake to stop and hold Bridge. Three remaining brakes will stop and hold Bridge.	No effect.	3
			Fails to release	Motor will attempt to drive through the brake. Computer controller will detect following error or encoder error and shut down Bridge drives.	No effect.	3

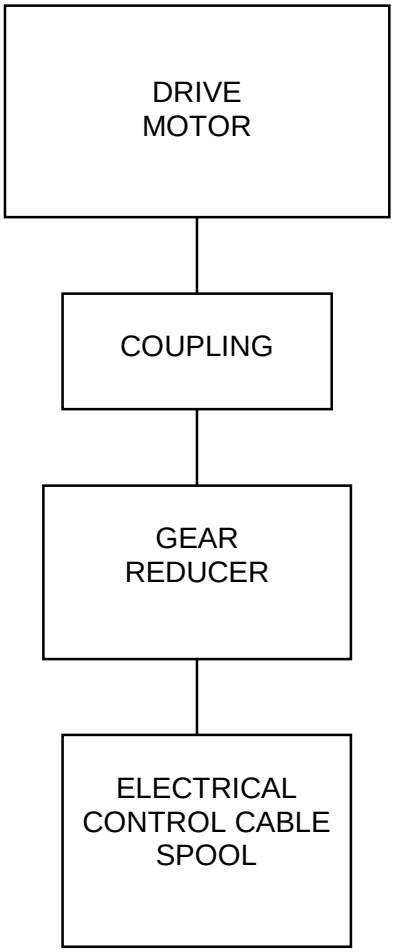

Figure 22. Cable Reel Mechanical FMEA Diagram

Table 14. **Mechanical FMEA – Main and Auxilary Hoist Cable Reel Assembly**

System/Subsystem: 325 Ton Bridge Cranes at the Vehicle Assembly Building High Bays 1/2/3/4 / Main and Aux. Hoist Cable Reel Assemblies
PMN: H72-1200-01, -02

Drawing No.: A-14969 / A-14974
Reference Figure: Figure 22

Find No. Part No.	Part Name	Part Function	a. Failure Mode b. Cause c. FMN d. Detection Method e. Correcting Action f. Time to Effect g. Timeframe	Failure Effect On System Performance	Failure Effect On Vehicle Systems And/Or Personnel Safety	Crit Cat
None 03254801	Drive Motor	Provides torque to raise, hold, and lower control cable	a. Motor Shaft Failure b. Catastrophic structural failure c. 09FY120-001.013 d. Visual e. None f. 1 Second g. NA	Loss of torque to cable reel. Cable will unwind off cable reel onto load.	Possible loss / damage to a vehicle system (TPS).	2
None 02978604	Gear Reducer	Transmits torque from the Cable Reel Drive Motor to the Electric Control Cable Spool.	a. Gear Reducer Failure b. Catastrophic structural failure c. 09FY120-001.014 d. Visual e. None f. 1 Second g. NA	Loss of torque to cable reel. Cable will unwind off cable reel onto load.	Possible loss / damage to a vehicle system (TPS).	2
None None	Coupling	Transmits torque from the Cable Reel Drive Motor to the Gear Reducer and Electric Control Cable Spool.	a. Coupling Failure b. Catastrophic structural failure c. 09FY120-001.015 d. Visual e. None f. 1 Second g. NA	Loss of torque to cable reel. Cable will unwind off cable reel onto load.	Possible loss / damage to a vehicle system (TPS).	2

Electrical FMEA, Main Power Section
Wire harnesses, cables, or connectors were not analyzed in the Electrical FMEA for this system since a single failure (open or short) could not result in the loss of life or vehicle. (Ref. NSTS 22206, Paragraph 4.4.1.b.2)

This FMEA section references Ederer drawing EB-2508, specifically the following sheets:

Sheet	Title
1	Main Power Elementary
1A	Main Power Elementary
2	Main Power Elementary
2A	Main Power Elementary
2B	Main Power Elementary
3	Main Power Elementary
3A	Main Power Elementary

Table 15. **Electrical FMEA - Main Power**

System/Subsystem: 325 Ton Bridge Cranes at the Vehicle Assembly Building High Bays 1/2/3/4 / Main Power
PMN: H72-1200-01, -02
Drawing No.: EB-2508
Reference Figure: None

Find No. Part No.	Part Name	Part Function	a. Failure Mode b. Cause c. FMN d. Detection Method e. Correcting Action f. Time to Effect g. Timeframe	Failure Effect On System Performance	Failure Effect On Vehicle Systems And/Or Personnel Safety	Crit Cat
ST	Main Disconnect, Shunt Trip	Opens to disconnect crane from facility power	Fails open	Unable to power crane. Delay in operations.	No effect.	3
			Fails closed	Unable to remove power from crane. Operator can disable all drives and set brakes by switching on/off key to off position. Requires previous failure to actuate shunt trip.	No effect.	3
None	EMI Filter	Prevents electromagnetic interference from traveling from facility to crane or crane to facility	Fails open	Loss of one or more phases. UV phase loss relay will detect loss and disable control power, drives and set brakes.	No effect.	3
			Fails shorted	Isolation transformers will protect individual drives from interference. Fault sense assemblies will detect any imbalance between phases.	No effect.	3
FU1, FU2, FU3	Fuse	Protects facility power from internal shorts in UV Phase monitor	Prematurely operates	Loss of one or more phases. UV phase loss relay will detect loss and disable control power, drives and set brakes.	No effect.	3
			Fails to operate	Excessive current can be drawn by UV / Phase monitor. Requires previous failure in UV / Phase Monitor.	No effect.	3

Table 15. **Electrical FMEA - Main Power**

System/Subsystem: 325 Ton Bridge Cranes at the Vehicle Assembly Building High Bays 1/2/3/4 / Main Power
PMN: H72-1200-01, -02
Drawing No.: EB-2508
Reference Figure: None

Find No. Part No.	Part Name	Part Function	a. Failure Mode b. Cause c. FMN d. Detection Method e. Correcting Action f. Time to Effect g. Timeframe	Failure Effect On System Performance	Failure Effect On Vehicle Systems And/Or Personnel Safety	Crit Cat
UV	Under voltage Phase Loss Relay	Monitors incoming facility power for voltage level and proper phase sequencing.	Fails to operate	Loss of phase loss and under voltage protection to control circuit. Phase loss and voltage monitors in hoist circuits will disable hoist drives, dropping out the main line contactor and setting all brakes.	No effect.	3
			Prematurely operates	UV contact will open, disabling control power, opening mainline contactor, disabling drives and setting brakes.	No effect.	3
	Contact	Opens to interrupt power to start relays MI, M2 and PLC input 2, 5, A2	Fails closed	Loss of phase loss and under voltage protection to control circuit. Phase loss and voltage monitors in hoist circuits will disable hoist drives, dropping out main line contactor and setting all brakes.	No effect.	3
			Fails open	Loss of power to start relays M1, M2 and PLC input. Crane will not operate.	No effect.	3
MLPFU1, MLPFU2, MLPFU3, MLPFU4, MLPFU5, MLPFU6	Fuse	Protects circuitry from overloads in main hoist lubrication pump circuitry	Fails to operate	Opposite fuse will protect circuitry. Requires previous failure in downstream circuitry.	No effect.	3
			Prematurely operates	Loss of 2 of 3 phases of power to one main hoist gearbox lubrication pump. Pump will stop or will run inefficiently causing improper lubrication of gearbox. Other gearbox will be operating normally.	No effect.	3

Table 15. **Electrical FMEA - Main Power**

System/Subsystem: 325 Ton Bridge Cranes at the Vehicle Assembly Building High Bays 1/2/3/4 / Main Power
PMN: H72-1200-01, -02
Drawing No.: EB-2508
Reference Figure: None

Find No. Part No.	Part Name	Part Function	a. Failure Mode b. Cause c. FMN d. Detection Method e. Correcting Action f. Time to Effect g. Timeframe	Failure Effect On System Performance	Failure Effect On Vehicle Systems And/Or Personnel Safety	Crit Cat
MLPWOL, MLPEOL	Overload Switch	Opens contacts when excessive current flows through main hoist gearbox lubrication pump motor	Fails to operate	Excessive current will blow MLPFU1 - MLPFU6 resulting in loss of 2 of 3 phases of power to one main hoist gearbox lubrication pump. Pump will stop or will run inefficiently causing improper lubrication of gearbox. Other gearbox will be operating normally. Requires previous failure to cause overload.	No effect.	3
			Prematurely operates	Contact will open, de-energizing starter relay for associated lubrication pump. Loss of proper lubrication to one of the main hoist gearboxes. Other gearbox will be operating normally.	No effect.	3
	Contact	Opens to de-energize main hoist lubrication pump starter relay	Fails open	Starter relay for associated lubrication pump will de-energize. Loss of proper lubrication to one of the main hoist gearboxes. Other gearbox will be operating normally.	No effect.	3
			Fails closed	Start relay will not be de-energized if overload occurs in main hoist lubrication pump motor circuit MLPFU1 - MLPFU6 will protect against overloads. Requires previous failure to cause overload.	No effect.	3
None	Motor, main hoist lubrication pump, East and West	Converts electrical energy to mechanical energy to pump gearbox lubrication	Fails to operate	Loss of proper lubrication to one of the main hoist gearboxes. Other gearbox will be operating normally.	No effect.	3

Table 15. **Electrical FMEA - Main Power**

System/Subsystem: 325 Ton Bridge Cranes at the Vehicle Assembly Building High Bays 1/2/3/4 / Main Power
PMN: H72-1200-01, -02
Drawing No.: EB-2508
Reference Figure: None

Find No. Part No.	Part Name	Part Function	a. Failure Mode b. Cause c. FMN d. Detection Method e. Correcting Action f. Time to Effect g. Timeframe	Failure Effect On System Performance	Failure Effect On Vehicle Systems And/Or Personnel Safety	Crit Cat
TLPFU1, TLPFU2, TLPFU3, TLPFU4, TLPFU5, TLPFU6	Fuse	Protects circuitry from overloads in Trolley lubrication pump circuitry	Fails to operate	Opposite fuse will protect circuitry. Requires previous failure in downstream circuitry.	No effect.	3
			Prematurely operates	Loss of 2 of 3 phases of power to one Trolley gearbox lubrication pump. Pump will stop or will run inefficiently causing improper lubrication of gearbox. Other gearbox will be operating normally.	No effect.	3
TLPWOL, TLPEOL	Overload Switch	Opens contacts when excessive current flows through Trolley gearbox lubrication pump motor	Fails to operate	Excessive current will blow TLPFU1 - TLPFU6 resulting in loss of 2 of 3 phases of power to one Trolley gearbox lubrication pump. Pump will stop or will run inefficiently causing improper lubrication of gearbox. Other gearbox will be operating normally. Requires previous failure to cause overload.	No effect.	3
			Prematurely operates	Contact will open, de-energizing starter relay for associated lubrication pump. Loss of proper lubrication to one of the Trolley gearboxes. Other gearbox will be operating normally.	No effect.	3
	Contact	Opens to de-energize Trolley lubrication pump starter relay	Fails open	Starter relay for associated lubrication pump will de-energize. Loss of proper lubrication to one of the Trolley gearboxes. Other gearbox will be operating normally.	No effect.	3

Table 15. **Electrical FMEA - Main Power**

System/Subsystem: 325 Ton Bridge Cranes at the Vehicle Assembly Building High Bays 1/2/3/4 / Main Power
PMN: H72-1200-01, -02
Drawing No.: EB-2508
Reference Figure: None

Find No. Part No.	Part Name	Part Function	a. Failure Mode b. Cause c. FMN d. Detection Method e. Correcting Action f. Time to Effect g. Timeframe	Failure Effect On System Performance	Failure Effect On Vehicle Systems And/Or Personnel Safety	Crit Cat
			Fails closed	Starter relay will not be de-energized if overload occurs in Trolley lubrication pump motor circuit. TLPFU1 - TLPFU6 will protect against overloads. Requires previous failure to cause overload.	No effect.	3
None	Motor, Trolley, Lubrication Pump, East and West	Converts electrical energy to mechanical energy to pump gearbox lubrication	Fails to operate	Loss of proper lubrication to one of the Trolley Gearboxes. Other gearbox will be operating normally.	No effect.	3
FU4, FU5	Fuse	Protects facility power from overloads in control transformer and downstream circuitry	Fails to operate	Opposite fuse will protect circuitry. Requires previous failure in downstream circuitry.	No effect.	3
			Prematurely operates	Loss of power to all controls. All brakes will (remain) set.	No effect.	3
CT	Transformer	Converts 480 volts AC to 120 volts AC	Fails open	Loss of power to all controls. All brakes will (remain) set.	No effect.	3
			Fails shorted	FU4 and FU5 will protect other circuitry from overload. Loss of power to all controls. All brakes will (remain) set.	No effect.	3
FU6	Fuse	Protects control transformer from overloads in downstream circuitry	Fails to operate	FU4 and FU5 will protect circuitry from overload. Requires previous failure in downstream circuitry.	No effect.	3
			Prematurely operates	Loss of power to all controls. All brakes will (remain) set.	No effect.	3

Table 15. **Electrical FMEA - Main Power**

System/Subsystem: 325 Ton Bridge Cranes at the Vehicle Assembly Building High Bays 1/2/3/4 / Main Power
PMN: H72-1200-01, -02
Drawing No.: EB-2508
Reference Figure: None

Find No. Part No.	Part Name	Part Function	a. Failure Mode b. Cause c. FMN d. Detection Method e. Correcting Action f. Time to Effect g. Timeframe	Failure Effect On System Performance	Failure Effect On Vehicle Systems And/Or Personnel Safety	Crit Cat
CAB	Circuit Breaker	Protects upstream circuits from overloads in control cab GENIUS PLC inputs	Prematurely operates	Loss of power to all control cab control inputs. All brakes will (remain) set.	No effect.	3
			Fails to operate	FU6 will protect circuitry from overload. Requires previous failure in downstream circuitry to cause overload.	No effect.	3
FU10, FU11	Fuse	Protects facility power from overloads in control transformer and downstream circuitry	Fails to operate	Opposite fuse will protect against overload. Requires previous failure in downstream circuitry to cause overload.	No effect.	3
			Prematurely operates	Loss of power to crane control circuits. Brake will (remain) set.	No effect.	3
MCT	Transformer	Converts 480 volts AC to 120 volts AC	Fails open	Loss of power to crane control circuits. Brake will (remain) set.	No effect.	3
			Fails shorted	FU10 and FU11 will protect against overload. Loss of power to crane control circuits. Brake will (remain) set.	No effect.	3
FU12, FU13, FU14, FU15	Fuse	Protects control transformer from overloads in downstream circuitry	Fails to operate	FU10 and FU11 will protect against overload. Requires previous failure in downstream circuitry to cause overload.	No effect.	3
			Prematurely operates	Loss of power to associated crane control (Main Hoist, Auxiliary Hoist, Trolley or Bridge). Brakes for that motion will (remain) set.	No effect.	3

Table 15. **Electrical FMEA - Main Power**

System/Subsystem: 325 Ton Bridge Cranes at the Vehicle Assembly Building High Bays 1/2/3/4 / Main Power
PMN: H72-1200-01, -02
Drawing No.: EB-2508
Reference Figure: None

Find No. Part No.	Part Name	Part Function	a. Failure Mode b. Cause c. FMN d. Detection Method e. Correcting Action f. Time to Effect g. Timeframe	Failure Effect On System Performance	Failure Effect On Vehicle Systems And/Or Personnel Safety	Crit Cat
10PS	+10 volt Power Supply	Converts 120 volts AC to +10 volts DC	Fails low or no output	Crane motions will move at slower that expected speeds or minimum speeds in the speed range selected.	No effect.	3
			Fails high output	Increased output voltage will cause proportional increase in speed of all crane motions within speed range selected. 10VSAR voltage-sensing relay will detect when voltage exceeds 10.5 volts and remove control power and open mainline contactor.	No effect.	3
10VSAR	Voltage Sensing Relay	Opens contact when 10PS output voltage exceeds 10.5 volts to de-energize mainline contactor relay.	Fails to operate	Loss of overvoltage protection for 10PS. Higher that normal voltage from 10PS will cause proportional speed increases in all crane motions. Crane speed can reach maximum speed in the speed range selected. Speed will not exceed range selected. Failure is not detectable.	No effect.	3
			Prematurely operates	Mainline contactor will de-energize, disabling all drives and setting all brakes.	No effect.	3

Table 15. **Electrical FMEA - Main Power**

System/Subsystem: 325 Ton Bridge Cranes at the Vehicle Assembly Building High Bays 1/2/3/4 / Main Power
PMN: H72-1200-01, -02
Drawing No.: EB-2508
Reference Figure: None

Find No. Part No.	Part Name	Part Function	a. Failure Mode b. Cause c. FMN d. Detection Method e. Correcting Action f. Time to Effect g. Timeframe	Failure Effect On System Performance	Failure Effect On Vehicle Systems And/Or Personnel Safety	Crit Cat
	Contact	Opens contact when 10PS output voltage exceeds 10.5 volts to de-energize mainline contactor relay.	Fails closed	Loss of overvoltage protection for 10PS. Higher than normal voltage from 10PS will cause proportional speed increases in all crane motions. Crane speed can reach maximum speed in the speed range selected. Speed will not exceed range selected. Failure is not detectable.	No effect.	3
			Fails open	Mainline contactor will de-energize, disabling all drives and setting all brakes.	No effect.	3
MCRCB	Main Hoist Cable Reel Circuit Breaker	Protects facility power from overloads in main hoist cable reel motor and brake circuit.	Fails to operate	MCRCB will allow excessive current flow to continue. Overload switch MCROL will open due to excessive current. PLC will detect overload and prevent hoist from operating. Requires previous failure in cable reel circuit to cause overload.	No effect.	3
			Prematurely operates	Loss of power to cable reel circuit. Cable Reel Brake #1 will set. Relay MCLR will not energize. PLC will detect loss of power and not release Cable Reel Brake #2 or allow hoist to run.	No effect.	3
MCROL	Main Hoist Cable Reel Overload Switches	Opens contact when excessive current passes through overload switch	Fails to operate	Cable Reel Drive can continue to draw excessive current. Circuit Breaker MCRCB will trip. Requires previous failure in Cable Reel Drive to cause excessive current.	No effect.	3

Table 15. **Electrical FMEA - Main Power**

System/Subsystem: 325 Ton Bridge Cranes at the Vehicle Assembly Building High Bays 1/2/3/4 / Main Power
PMN: H72-1200-01, -02
Drawing No.: EB-2508
Reference Figure: None

Find No. Part No.	Part Name	Part Function	a. Failure Mode b. Cause c. FMN d. Detection Method e. Correcting Action f. Time to Effect g. Timeframe	Failure Effect On System Performance	Failure Effect On Vehicle Systems And/Or Personnel Safety	Crit Cat
			Prematurely operates	Relay MCRC will de-energize, removing power from the Cable Reel Drive and set Cable Reel Brake #1. PLC will detect loss of power, set Cable Reel Brake #2 and prevent hoist from operating.	No effect.	3
	Contact, Normally Closed	Opens to de-energize Main Hoist Cable Reel Contactor Relay, MCRC	Fails open	Relay MCRC will de-energize removing power from the Cable Reel Drive and set Cable Reel Brake #1. PLC will detect loss of power, set Cable Reel Brake #2 and prevent hoist from operating.	No effect.	3
			Fails closed	Cable Reel Drive can continue to draw excessive current. Circuit Breaker MCRCB will trip. Requires previous failure in Cable Reel Drive to cause excessive current.	No effect.	3
None	Main Hoist Cable Reel Eddy Current Drive	Constant speed AC motor generates torque for Cable Reel Spool and supplies power to the Cable Reel Eddy Current Clutch	Fails open	Constant speed AC motor will not provide torque. Eddy Current Clutch will not have current flow to energize relay MCLR. Cable Reel Brake #2 will not release. PLC will detect Cable Reel Brake not release and prevent hoist from operating.	No effect.	3
			Fails shorted	Circuit Breaker MCRCB will open to protect facility power or MCROL will open due to excessive current, de-energizing relay MCRC. PLC will detect Cable Reel Brake not released and prevent hoist from operating.	No effect.	3

Table 15. **Electrical FMEA - Main Power**

System/Subsystem: 325 Ton Bridge Cranes at the Vehicle Assembly Building High Bays 1/2/3/4 / Main Power
PMN: H72-1200-01, -02
Drawing No.: EB-2508
Reference Figure: None

Find No. Part No.	Part Name	Part Function	a. Failure Mode b. Cause c. FMN d. Detection Method e. Correcting Action f. Time to Effect g. Timeframe	Failure Effect On System Performance	Failure Effect On Vehicle Systems And/Or Personnel Safety	Crit Cat
MCRM1	Main Hoist Cable Reel Motor Monitor Relay	Monitors current flow to Main Hoist Cable Reel Eddy Current Drive	Coil Fails open	Indicates no current flow to Eddy Current Drive. Contact will not close. PLC (input %I163) will detect loss of current, not allow brakes to be released, and prevent main hoist from operating.	No effect.	3
			Contact Fails open	Indicates no current flow to Eddy Current Drive. Contact will not close. PLC (input %I163) will detect loss of current, not allow brakes to be released, and prevent main hoist from operating.	No effect.	3
			Contact fails closed	Loss of main hoist Cable Reel Eddy Current Drive current flow monitoring capability. If current flowing to the drive is lost, either MCRB1 will detect loss (contact open) and PLC (input %I163) will not allow brakes to be released or MCRL will detect loss and PLC (input %I165) will not allow brakes to be released. In either case, PLC will prevent hoist from operating.	No effect.	3
MCRB1	Main Hoist Cable Reel Brake #1 Relay	Monitors current flow to main hoist cable Reel Brake #1	Coil fails open	Indicates no current flow to brake #1 circuit. Contact will not close. PLC (input %I163) will detect loss of current, not allow brakes to be released and prevent main hoist from operating.	No effect.	3

Table 15. **Electrical FMEA - Main Power**

System/Subsystem: 325 Ton Bridge Cranes at the Vehicle Assembly Building High Bays 1/2/3/4 / Main Power
PMN: H72-1200-01, -02
Drawing No.: EB-2508
Reference Figure: None

Find No. Part No.	Part Name	Part Function	a. Failure Mode b. Cause c. FMN d. Detection Method e. Correcting Action f. Time to Effect g. Timeframe	Failure Effect On System Performance	Failure Effect On Vehicle Systems And/Or Personnel Safety	Crit Cat
			Contact fails open	Indicates no current flow to brake #1 circuit. PLC (input %I163) will detect loss of current, not allow brakes to be released and prevent main hoist from operating.	No effect.	3
			Contact fails closed	Loss of brake #1 circuit current flow monitoring capability. If current flowing to brake #1 is lost, loss of torque to Cable Reel will occur. Cable will unwind off the Cable Reel onto flight hardware resulting in damage to vehicle system (TPS). Double failure required.	No effect.	3
MCRB2	Main Hoist Cable Reel Brake #2	Monitors current flow to Main Host Cable Reel Brake #2	Coil fails open	Indicates no current flow to Brake #2 circuit. Contact will not close. PLC (input %I167) will detect loss of current not allowing brakes to be released and prevent Main Hoist from operating.	No effect.	3
			Contact fails open	Indicates no current flow to Brake #2 circuit. PLC (input %I167) will detect loss of current not allowing brakes to be released and prevent Main Hoist from operating.	No effect.	3
			Contact fails open	Loss of brake #1 circuit current flow monitoring capability. If current flowing to brake #1 is lost, loss of torque to Cable Reel will occur. Cable will unwind off the Cable Reel onto flight hardware resulting in damage to vehicle system (TPS). Double failure required.	No effect.	3

Table 15. **Electrical FMEA - Main Power**

System/Subsystem: 325 Ton Bridge Cranes at the Vehicle Assembly Building High Bays 1/2/3/4 / Main Power
PMN: H72-1200-01, -02
Drawing No.: EB-2508
Reference Figure: None

Find No. Part No.	Part Name	Part Function	a. Failure Mode b. Cause c. FMN d. Detection Method e. Correcting Action f. Time to Effect g. Timeframe	Failure Effect On System Performance	Failure Effect On Vehicle Systems And/Or Personnel Safety	Crit Cat
None	Main Hoist Cable Reel Eddy Current Controller	Supplies current to Eddy current clutch and energizes relay MCLR when power is supplied through constant speed AC motor	Fails low or no output	Eddy Current Clutch will not have current flow to energize relay MCLR. Cable Reel Brake #2 will not release. PLC will detect Cable Reel Brake not released and prevent hoist from operating.	No effect.	3
			Fails high output	Eddy current clutch will provide higher that normal torque to Cable Reel Spool. Will cause circuit Breaker MCRCB to trip or overload, MCROL to open. PLC would detect loss of power to Cable Reel and prevent hoist from operating.	No effect.	3
MCLR	Relay	Energizes when power is supplied to Eddy Current Clutch Coil	Fails de-energized	PLC will detect loss of current through Eddy Current Clutch Coil and not release Cable Reel Brake #2. PLC will prevent hoist from operating.	No effect.	3
			Fails energized	MCLR contacts will not de-energize PLC input if a failure has occurred in Cable Reel Drive. Cable will unwind from spool when no torque is applied and brakes are released. Requires previous failure in Cable Reel Drive.	No effect.	3
	Contact, Normally closed	Contact closed when current flows through Eddy Current Clutch Coil	Fails open	PLC will detect loss of current through Eddy Current Clutch Coil and not release Cable Reel Brake #2. PLC will prevent hoist from operating.	No effect.	3

Table 15. **Electrical FMEA - Main Power**

System/Subsystem: 325 Ton Bridge Cranes at the Vehicle Assembly Building High Bays 1/2/3/4 / Main Power
PMN: H72-1200-01, -02
Drawing No.: EB-2508
Reference Figure: None

Find No. Part No.	Part Name	Part Function	a. Failure Mode b. Cause c. FMN d. Detection Method e. Correcting Action f. Time to Effect g. Timeframe	Failure Effect On System Performance	Failure Effect On Vehicle Systems And/Or Personnel Safety	Crit Cat
			Fails closed	PLC input will not de-energize PLC input if a failure has occurred in Cable Reel Drive. Cable will unwind from spool when no torque is applied and brakes are released. Requires previous failure in Cable Reel Drive.	No effect.	3
None	Main Hoist Cable Reel Eddy Current Clutch	Provides magnetic coupling between constant speed AC motor and Cable Reel Spool	Fails open	Loss of current flow through Eddy current clutch. Relay MCLR will not energize. PLC will not release Cable Reel Brake #2 or allow hoist to operate.	No effect.	3
			Fails shorted	Overload will cause circuit Breaker MCRCB to trip or overload switch MCROL to open. PLC would detect loss of power to Cable Reel and prevent hoist from operating.	No effect.	3
None	Main Hoist Cable Reel Brake (2 each)	Provides torque to hold Cable Reel Spool stationary while hoist is not operating	Fails to release	While lowering, weight of load and load block will rotate Cable Reel Spool through the Brake. While raising, spool will not rotate. Slack cable will develop in power cable to load block.	No effect.	3
			Fails to engage	Second brake will engage and hold Cable Reel stationary.	No effect.	3

Table 15. **Electrical FMEA - Main Power**

System/Subsystem: 325 Ton Bridge Cranes at the Vehicle Assembly Building High Bays 1/2/3/4 / Main Power
PMN: H72-1200-01, -02
Drawing No.: EB-2508
Reference Figure: None

Find No. Part No.	Part Name	Part Function	a. Failure Mode b. Cause c. FMN d. Detection Method e. Correcting Action f. Time to Effect g. Timeframe	Failure Effect On System Performance	Failure Effect On Vehicle Systems And/Or Personnel Safety	Crit Cat
ACRCB	Auxiliary Hoist Cable Reel Circuit Breaker	Protects facility power from overloads in Auxiliary Hoist Cable Reel Motor and brake circuit	Fails to operate	ACRCB will allow excessive current flow to continue. Overload switch ACROL will open due to excessive current. PLC will detect overload and prevent hoist from operating. Requires previous failure in Cable Reel circuits to cause overload.	No effect.	3
			Prematurely operates	Loss of power to Cable Reel circuit. Cable Reel Brake #1 will not release and relay ACLR will not energize. PLC will detect loss of power and not release Cable Reel Brake #2 or allow hoist to run.	No effect.	3
ACROL	Auxiliary Hoist Cable Reel Overload Switch	Opens when excessive current passes through Overload Switch	Fails to operate	Cable Reel Drive can continue to draw excessive current. Circuit Breaker ACRCB will trip. Requires previous failure in Cable Reel Drive to cause excessive current.	No effect.	3
			Premature operation	Relay ACRC will de-energize, removing power from the Cable Reel Drive and setting Cable Reel Brake #1. PLC will detect loss of power, set Cable Reel Brake #2 and prevent hoist from operating.	No effect.	3
ACRM1	Aux. Hoist Cable Reel Motor Monitor Relay	Monitors current flow to Aux. Hoist Cable Reel Eddy Current Drive	Coil fails open	Indicates no current flow to Eddy Current Drive. Contact will not close. PLC (Input %I166) will detect loss of current not allowing brake to be released, and prevent Aux. hoist from operating.	No effect.	3

Table 15. **Electrical FMEA - Main Power**

System/Subsystem: 325 Ton Bridge Cranes at the Vehicle Assembly Building High Bays 1/2/3/4 / Main Power
PMN: H72-1200-01, -02
Drawing No.: EB-2508
Reference Figure: None

Find No. Part No.	Part Name	Part Function	a. Failure Mode b. Cause c. FMN d. Detection Method e. Correcting Action f. Time to Effect g. Timeframe	Failure Effect On System Performance	Failure Effect On Vehicle Systems And/Or Personnel Safety	Crit Cat
			Normally open contact fails open	Indicates no current flow to Eddy Current Drive. PLC (Input %I166) will detect loss of current not allowing brake to be released, and prevent Aux. hoist from operating.	No effect.	3
			Normally open contact fails closed	Loss of Aux. hoist Cable Reel Eddy Current Drive current flow monitoring capability. If current flowing to the drive is lost, either MCRB1 will detect loss (contact open) and PLC (input %I166) will not allow brakes to be released or MCRL will detect loss and PLC (input %I165) will not allow brakes to be released. In either case, PLC will prevent hoist from operating.	No effect.	3
ACRB1	Aux. Hoist Cable Reel Brake #1 Relay	Monitors current flow to Aux. Hoist Cable Reel Brake #1	Coil fails open	Indicates no current flow to brake #1 circuit. Contact will not close. PLC (input %I166) will detect loss of current, not allowing brakes to be released, and prevent Aux. hoist from operating.	No effect.	3
			Normally open contact fails open	Indicates no current flow to brake #1 circuit. PLC (input %I166) will detect loss of current, not allowing brakes to be released, and prevent Aux. hoist from operating.	No effect.	3

Table 15. **Electrical FMEA - Main Power**

System/Subsystem: 325 Ton Bridge Cranes at the Vehicle Assembly Building High Bays 1/2/3/4 / Main Power
PMN: H72-1200-01, -02
Drawing No.: EB-2508
Reference Figure: None

Find No. Part No.	Part Name	Part Function	a. Failure Mode b. Cause c. FMN d. Detection Method e. Correcting Action f. Time to Effect g. Timeframe	Failure Effect On System Performance	Failure Effect On Vehicle Systems And/Or Personnel Safety	Crit Cat
			Contact fails closed	Loss of brake #1 circuit current flow monitoring capability. If current flowing to brake #1 is lost, loss of torque to Cable Reel will occur. Cable will unwind off the Cable Reel onto flight hardware resulting in damage to vehicle system (TPS). Double failure required.	No effect.	3
ACRB2	Aux. Hoist Cable Reel Brake #2 Relay	Monitors current flow to Aux. Host Cable Reel Brake #2	Coil fails open	Indicates no current flow to Brake #2 circuit. Contact will not close. PLC (input %I168) will detect loss of current not allowing brakes to be released and prevent Aux. Hoist from operating.	No effect.	3
			Contact fails open	Indicates no current flow to Brake #2 circuit. PLC (input %I168) will detect loss of current not allowing brakes to be released and prevent Aux. Hoist from operating.	No effect.	3
			Contact fails closed	Loss of brake #2 circuit current flow monitoring capability. If current flowing to brake #2 is lost, loss of torque to Cable Reel will occur. Cable will unwind off the Cable Reel onto flight hardware resulting in damage to vehicle system (TPS). Double failure required.	No effect.	3

Table 15. **Electrical FMEA - Main Power**

System/Subsystem: 325 Ton Bridge Cranes at the Vehicle Assembly Building High Bays 1/2/3/4 / Main Power
PMN: H72-1200-01, -02
Drawing No.: EB-2508
Reference Figure: None

Find No. Part No.	Part Name	Part Function	a. Failure Mode b. Cause c. FMN d. Detection Method e. Correcting Action f. Time to Effect g. Timeframe	Failure Effect On System Performance	Failure Effect On Vehicle Systems And/Or Personnel Safety	Crit Cat
None	Auxiliary Hoist Cable Reel Eddy Current Drive	Constant speed AC motor generates torque for Cable Reel Spool and supplies power to the Cable Reel Eddy Current Clutch	Fails open	Constant speed AC motor will not provided torque, Eddy current clutch will not have current flow to energize relay ACLR, Cable Reel Brake #2 will not release. PLC will detect Cable Reel Brake not released and prevent hoist from operating.	No effect.	3
			Fails shorted	Circuit Breaker ACRCB will open to protect facility power or ACROL will open due to excessive current, de-energizing relay ACLR. PLC will detect loss of power and Cable Reel Brake not released and prevent hoist from operating.	No effect.	3
None	Auxiliary Hoist Cable Reel Eddy Current Controller	Supplies current to Eddy Current Clutch and energizes relay ACLR when power is supplied through constant speed AC motor	Fails low or no output	Eddy Current Clutch will not have current flow to energize relay ACLR. Cable Reel Brake #2 will not release. PLC will detect Cable Reel Brake not released and prevent hoist from operating.	No effect.	3
			Fails High output	Eddy current Clutch will provide higher than normal torque to Cable Reel Spool. Will cause circuit Breaker ACRCB to trip or overload ACROL to open. PLC would detect loss of power to Cable Reel and prevent hoist from operating.	No effect.	3

Table 15. **Electrical FMEA - Main Power**

System/Subsystem: 325 Ton Bridge Cranes at the Vehicle Assembly Building High Bays 1/2/3/4 / Main Power
PMN: H72-1200-01, -02
Drawing No.: EB-2508
Reference Figure: None

Find No. Part No.	Part Name	Part Function	a. Failure Mode b. Cause c. FMN d. Detection Method e. Correcting Action f. Time to Effect g. Timeframe	Failure Effect On System Performance	Failure Effect On Vehicle Systems And/Or Personnel Safety	Crit Cat
ACLR	Relay	Energizes when power is supplied to Eddy Current Clutch Coil	Fails de-energized	PLC will detect loss of current through Eddy Current Clutch Coil and not release Cable Reel Brake #2. PLC will prevent hoist from operating.	No effect.	3
			Fails energized	ACLR contacts will not de-energize PLC input if a failure has occurred in Cable Reel Drive. Cable will unwind from spool when no torque is applied and brakes are released. Requires previous failure in Cable Reel Drive.	No effect.	3
	Contact	Opens to de-energize PLC input	Fails open	PLC will detect loss of current through Eddy Current Clutch Coil and not release Cable Reel Brake #1. PLC will prevent hoist from operating.	No effect.	3
			Fails closed	PLC input will not de-energize PLC input if a failure has occurred in Cable Reel Drive. Cable will unwind from spool when no torque is applied and brakes are released. Requires previous failure in Cable Reel Drive.	No effect.	3
None	Auxiliary Hoist Cable Reel Eddy Current Clutch	Provides magnetic coupling between constant speed AC motor and Cable Reel Spool	Fails open	Loss of current flow through Eddy Current Clutch. Relay ACLR will not energize. PLC will not release Cable Reel Brake #2 or allow hoist to operate.	No effect.	3

Table 15. **Electrical FMEA - Main Power**

System/Subsystem: 325 Ton Bridge Cranes at the Vehicle Assembly Building High Bays 1/2/3/4 / Main Power
PMN: H72-1200-01, -02
Drawing No.: EB-2508
Reference Figure: None

Find No. Part No.	Part Name	Part Function	a. Failure Mode b. Cause c. FMN d. Detection Method e. Correcting Action f. Time to Effect g. Timeframe	Failure Effect On System Performance	Failure Effect On Vehicle Systems And/Or Personnel Safety	Crit Cat
			Fails shorted	Overload will cause circuit Breaker ACRCB to trip or overload switch ACROL to open. PLC would detect loss of power to Cable Reel and prevent hoist from operating.	No effect.	3
None	Auxiliary Hoist Cable Reel Brake (2 each)	Provides torque to hold Cable Reel Spool stationary while hoists is not operating	Fails to release	While lowering, weight of load and load block will rotate Cable Reel Spool through the brake. While raising, spool will not rotate. Slack Cable will develop in power cable to load block.	No effect.	3
			Fails to engage	Second brake will engage and hold Cable Reel stationary.	No effect.	3
CCB	Circuit Breaker	Protects upstream circuitry from overloads in main power control circuit	Fails to operate	Upstream fuse FU6 will protect circuitry from overload in control circuitry. Requires previous failure to cause overload.	No effect.	3
			Prematurely operates	Loss of power to crane controls. Crane will not operate.	No effect.	3
None	Stop Switch	De-energizes relay M1, M2 and PLC input 2,5,A2 to remove power from control circuits	Fails open	Loss of power to start relays M1, M2, and PLC input 2,5,A2. Crane will not operate.	No effect.	3
			Fails closed	Crane control power will remain on when stop is selected. Power can be removed at main disconnect.	No effect.	3

Table 15. **Electrical FMEA - Main Power**

System/Subsystem: 325 Ton Bridge Cranes at the Vehicle Assembly Building High Bays 1/2/3/4 / Main Power
PMN: H72-1200-01, -02
Drawing No.: EB-2508
Reference Figure: None

Find No. Part No.	Part Name	Part Function	a. Failure Mode b. Cause c. FMN d. Detection Method e. Correcting Action f. Time to Effect g. Timeframe	Failure Effect On System Performance	Failure Effect On Vehicle Systems And/Or Personnel Safety	Crit Cat
None	Start Switch	Closes to energize relays M1, M2 and PLC input 2,5,A2	Fails open	Unable to apply power to control circuits. Crane will not operate.	No effect.	3
			Fails closed	Crane control circuits will power up when power is applied to crane. PLC timing will control startup sequence.	No effect.	3
M1	Start Relay Number 1	Energizes when start push button is pressed	Fails de-energized	Relay M, mainline contactor, will not energize. Main hoist, Auxiliary Hoist, Trolley and Bridge control circuits will not be energized. All brakes will (remain) set.	No effect.	3
			Fails energized	Crane control power will remain on when stop is selected. Power can be removed at main disconnect.	No effect.	3
	Contact	Closes to latch relays M1, M2 and PLC input energized	Fails open	Crane control power will not remain on when start push button is released.	No effect.	3
			Fails closed	Crane control circuits will power up when power is applied to crane. PLC timing will control startup sequence.	No effect.	3
	Contact	Closes to energize Main Hoist west and Trolley west lube pump starters	Fails open	Main Hoist west and Trolley west lube pump starters will not energize. Main Hoist East and Trolley East lubrication pumps will operate normally.	No effect.	3

Table 15. **Electrical FMEA - Main Power**

System/Subsystem: 325 Ton Bridge Cranes at the Vehicle Assembly Building High Bays 1/2/3/4 / Main Power
PMN: H72-1200-01, -02
Drawing No.: EB-2508
Reference Figure: None

Find No. Part No.	Part Name	Part Function	a. Failure Mode b. Cause c. FMN d. Detection Method e. Correcting Action f. Time to Effect g. Timeframe	Failure Effect On System Performance	Failure Effect On Vehicle Systems And/Or Personnel Safety	Crit Cat
			Fails closed	Main Hoist west and Trolley west lube pumps will run when power is supplied to the crane. Main hoist East and Trolley East lube pumps will run when crane controls are switched on with start switch.	No effect.	3
	Time Delay Contact	Closed to supply power to relay M, Main Contactor	Fails open	Relay M, Mainline Contactor, will not energize. Main Hoist, Auxiliary Hoist, Trolley and Bridge control circuits will not be energized. All brakes will (remain) set.	No effect.	3
			Fails closed	Mainline contactor will not de-energize when stop switch is pressed. Power can be removed by main disconnect.	No effect.	3
	Contact	Closes to supply power to Main Hoist Drive enable and brake relays	Fails open	Main Hoist Drives will not be enabled. PLC will not release Hoist brakes.	No effect.	3
			Fails closed	Main Hoist Drive will be disabled when mainline contactor drops out 3 phase power. PLC will set brakes.	No effect.	3
	Contact	Closes to supply power to Auxiliary Hoist Drive enable and brake relays	Fails open	Auxiliary Hoist Drives will not be enabled. PLC will not release Hoist brakes.	No effect.	3
			Fails closed	Auxiliary Hoist Drive will be disabled when mainline contactor drops out 3 phase power. PLC will set bakes.	No effect.	3

Table 15. **Electrical FMEA - Main Power**

System/Subsystem: 325 Ton Bridge Cranes at the Vehicle Assembly Building High Bays 1/2/3/4 / Main Power
PMN: H72-1200-01, -02
Drawing No.: EB-2508
Reference Figure: None

Find No. Part No.	Part Name	Part Function	a. Failure Mode b. Cause c. FMN d. Detection Method e. Correcting Action f. Time to Effect g. Timeframe	Failure Effect On System Performance	Failure Effect On Vehicle Systems And/Or Personnel Safety	Crit Cat
M2	Start Relay Number 2	Energized when Start push button is pressed	Fails de-energized	Contacts will not close to enable Trolley and Bridge Drives or start Main Hoist East and Trolley East lube pumps. Bridge and Trolley will not run.	No effect.	3
			Fails energized	Bridge and Trolley Drives will be de-energized when mainline contactor drops out 3 phase power and control power.	No effect.	3
	Contact	Closes to energize “power on” light and “power on” rotating beacon	Fails open	Control cab console “power on” light and “power on” rotating beacon will not illuminate when control power is on. Crane will operate normally.	No effect.	3
			Fails closed	Control cab console power on light and power on rotating beacon will illuminate when power is applied to the crane. Crane will not operate until control power is activated with start switch.	No effect.	3
	Contact	Closes to energize Main Hoist East and Trolley East lube pump starters	Fails open	Main Hoist East and trolley East lube pump starters will not energize. Main Hoist west and Trolley west lubrication pumps will operate normally.	No effect.	3
			Fails closed	Main Hoist East and Trolley East lube pumps will run when power is supplied to the crane. Main Hoist west and Trolley west lube pumps will run when crane controls are switched on with start switch.	No effect.	3

Table 15. **Electrical FMEA - Main Power**

System/Subsystem: 325 Ton Bridge Cranes at the Vehicle Assembly Building High Bays 1/2/3/4 / Main Power
PMN: H72-1200-01, -02
Drawing No.: EB-2508
Reference Figure: None

Find No. Part No.	Part Name	Part Function	a. Failure Mode b. Cause c. FMN d. Detection Method e. Correcting Action f. Time to Effect g. Timeframe	Failure Effect On System Performance	Failure Effect On Vehicle Systems And/Or Personnel Safety	Crit Cat
	Contact	Closes to supply power to Trolley Drive enable and Brake relays	Fails open	Relays TPDE and TSDE will not energize, preventing relay TPDC from completing DC motor loop and enabling motor control module. Brakes will not release.	No effect.	3
			Fails closed	Main line contactor relay M will de-energize when relay M2 de-energizes, removing power from Trolley control circuit and brakes. Brake will (remain) set.	No effect.	3
	Contact	Closes to supply power to Bridge Drive enable and Brake relays	Fails open	Relay BNDE and BSDE will not energize, preventing relays BNDC and BSDC from completing DC motor loop and enabling motor control module. Brakes will not release.	No effect.	3
			Fails closed	Main line contactor relay M will de-energize when relay M2 de-energizes, removing power from Bridge control circuit and brakes. Brake will (remain) set.	No effect.	3
I:2,5,A2	PLC input %I162	Allows PLC to detect when start relays are energized	Fails de-energized	PLC will detect crane power not switched on. Control logic in PLC will not be enabled. Crane will not operate.	No effect.	3
			Fails energized	PLC will detect that crane power is switched on. All control circuits will be de-energized and all brakes will be set.	No effect.	3

Table 15. **Electrical FMEA - Main Power**

System/Subsystem: 325 Ton Bridge Cranes at the Vehicle Assembly Building High Bays 1/2/3/4 / Main Power
PMN: H72-1200-01, -02
Drawing No.: EB-2508
Reference Figure: None

Find No. Part No.	Part Name	Part Function	a. Failure Mode b. Cause c. FMN d. Detection Method e. Correcting Action f. Time to Effect g. Timeframe	Failure Effect On System Performance	Failure Effect On Vehicle Systems And/Or Personnel Safety	Crit Cat
O:1,9,B3	PLC output %Q70	Energizes relay WD1 when PLC scan cycle time is within watchdog timer limit.	Fails de-energized	Loss of power to energize relay WD1. Loss of power to Start relays M1, M2 and PLC input 2,5,A2. Crane will not operate.	No effect.	3
			Fails energized	Watchdog timer will not remove control power if scan time of PLC ladder logic exceeds preset limit, indicating PLC failure. Hang-up of software could cause crane to continue operating at last commanded speed and direction. Requires previous failure in PLC.	No effect.	3
WD1	Watchdog Timer Relay	De-energizes when watchdog timer detects excessive time for PLC scan cycle.	Fails de-energized	Loss of power to Start relays M1, M2 and PLC input 2,5,A2. Crane will not operate.	No effect.	3
			Fails energized	Control power will not be removed if either PLC or Delta Tau motion controller watchdog timer signals that scan time has exceeded preset limit. Hang-up of software could cause Crane to continue operating at last commanded speed and direction. Requires previous failure in PLC or Delta Tau motion controller.	No effect.	3
	Contact	Closes to energize Start relays M1, M2 and PLC Input 2,5,A2	Fails open	Loss of power to Start relays M1, M2 and PLC Input. Crane will not operate.	No effect.	3

Table 15. **Electrical FMEA - Main Power**

System/Subsystem: 325 Ton Bridge Cranes at the Vehicle Assembly Building High Bays 1/2/3/4 / Main Power
PMN: H72-1200-01, -02
Drawing No.: EB-2508
Reference Figure: None

Find No. Part No.	Part Name	Part Function	a. Failure Mode b. Cause c. FMN d. Detection Method e. Correcting Action f. Time to Effect g. Timeframe	Failure Effect On System Performance	Failure Effect On Vehicle Systems And/Or Personnel Safety	Crit Cat
			Fails closed	Control power will not be removed if either PLC or Delta Tau motion controller watchdog timer signals that scan time has exceeded preset limit. Hang-up of software could cause Crane to continue operating at last commanded speed and direction. Requires previous failure in PLC or Delta Tau motion controller.	No effect.	3
	Normally closed contact	Closes to power computer fault light when watchdog timer detects excessive time for PLC scan cycle	Fails open	Computer fault light will not illuminate when watchdog timer for either PLC or Delta Tau motion controller trips. Watchdog timer will remove control power. Crane will not run. Brakes will (remain) set.	No effect.	3
			Fails closed	Computer fault light will remain illuminated continuously when no fault exists. Crane will operate normally.	No effect.	3
O:1,6,C1	PLC output	Energizes computer fault light	Fails de-energized	Computer fault light on cab console will not illuminate when PLC has a fault. PLC will disable drives and set brakes.	No effect.	3
			Fails energized	Computer fault light will remain illuminated continuously. All crane functions will operate normally.	No effect.	3
None	Computer Fault Indicator Light	Illuminates when energized by PLC output to indicate a fault in the PLC	Fails open	Computer fault light on cab console will not illuminate when PLC has a fault. PLC will disable drives and set brakes.	No effect.	3

Table 15. **Electrical FMEA - Main Power**

System/Subsystem: 325 Ton Bridge Cranes at the Vehicle Assembly Building High Bays 1/2/3/4 / Main Power
PMN: H72-1200-01, -02
Drawing No.: EB-2508
Reference Figure: None

Find No. Part No.	Part Name	Part Function	a. Failure Mode b. Cause c. FMN d. Detection Method e. Correcting Action f. Time to Effect g. Timeframe	Failure Effect On System Performance	Failure Effect On Vehicle Systems And/Or Personnel Safety	Crit Cat
			Fails shorted	No effect until computer fault occurs. Current overload will trip circuit Breaker CCB. Loss of power to control circuits. PLC error will disable drives and set brakes.	No effect.	3
M	Relay	Main contactor relay to control power to drives	Fails de-energized	Contacts will not close to supply power to drive control circuits and motor control modules. Crane will not operate.	No effect.	3
			Fails energized	Power to control circuits and motor control modules will not be removed when crane power switch is switched off. Power can be removed by pressing E-stop or facility disconnect.	No effect.	3
	Main line contacts	Close to allow 3 phase power to reach drives and controls	Fails open	Loss of power to drives and controls. Brakes will (remain) set.	No effect.	3
			Fails closed	Power will continue to be supplied to drives and controls. Power can be removed by pressing E-stop or the facility disconnect.	No effect.	3
			Fails open (single contact)	Phase loss monitors will detect loss of phase and disable hoist drives. Bridge and Trolley fault sense assemblies will detect error.	No effect.	3
			Fails closed (single contact)	No effect. A complete circuit does not exist.	No effect.	3

Table 15. **Electrical FMEA - Main Power**

System/Subsystem: 325 Ton Bridge Cranes at the Vehicle Assembly Building High Bays 1/2/3/4 / Main Power
PMN: H72-1200-01, -02
Drawing No.: EB-2508
Reference Figure: None

Find No. Part No.	Part Name	Part Function	a. Failure Mode b. Cause c. FMN d. Detection Method e. Correcting Action f. Time to Effect g. Timeframe	Failure Effect On System Performance	Failure Effect On Vehicle Systems And/Or Personnel Safety	Crit Cat
None	"Power on" indicator light	Illuminates when control power is activated with start switch	Fails open	Power on indicator light on cab console will not illuminate when crane power is switched on. Crane will operate normally.	No effect.	3
			Fails shorted	Current overload will occur when crane power is switched on. Overload will trip circuit Breaker CCB. Loss of power to control circuits. Drives will be disabled and brakes will be set.	No effect.	3
None	"Power on" Rotating Beacon	Illuminates when control power is activated with Start switch	Fails open	Rotating beacon will not be activated when crane is powered up.	No effect.	3
			Fails shorted	Current overload will occur when crane power is switched on. Overload will trip circuit Breaker CCB. Loss of power to control circuit. Drives will be disabled and brakes will be set.	No effect.	3
None	E-stop push button (2 each)	Closes to supply power to shunt trip relay coil	Fails open	Operator can press other E-stop to trip shunt trip circuit Breaker or switch crane power off to open mainline contactor, disabling drives and setting brakes.	No effect.	3
			Fails closed	Coil for shunt trip circuit Breaker will be energized when power is applied to the crane. Shunt trip circuit Breaker will trip, removing power from the Crane.	No effect.	3

Table 15. **Electrical FMEA - Main Power**

System/Subsystem: 325 Ton Bridge Cranes at the Vehicle Assembly Building High Bays 1/2/3/4 / Main Power
PMN: H72-1200-01, -02
Drawing No.: EB-2508
Reference Figure: None

Find No. Part No.	Part Name	Part Function	a. Failure Mode b. Cause c. FMN d. Detection Method e. Correcting Action f. Time to Effect g. Timeframe	Failure Effect On System Performance	Failure Effect On Vehicle Systems And/Or Personnel Safety	Crit Cat
ST	Shunt trip for main circuit Breaker	Energizes to trip main circuit Breaker	Fails open	Shunt trip Breaker will not activate if E-stop is pressed, or if either hoist has an overspeed or trips the weighted final limit. Requires multiple failures to cause overspeed or trip final upper limit. Operator can switch Crane power off, opening main line contactor, disabling drives and setting all brakes.	No effect.	3
			Fails shorted	CCB will trip due to overload if E-stop is pressed, or if either Hoist has an overspeed or trips the weighted final limit. Loss of power from CCB will drop out the main line contactor, disabling all drives and setting all brakes. Requires multiple failures to cause overspeed or trip weighted upper limit.	No effect.	3
O:1,6,C2	PLC output	Energizes shunt trip for main line circuit Breaker	Fails de-energized	PLC signal will not energize Shunt Trip of Main circuit Breaker. PLC ladder logic will disable drive that has failure and set brakes.	No effect.	3
			Fails energized	Shunt trip for main circuit Breaker will be energized as soon as power is applied to the crane. Loss of power to crane when main circuit Breaker trips.	No effect.	3

Table 15. **Electrical FMEA - Main Power**

System/Subsystem: 325 Ton Bridge Cranes at the Vehicle Assembly Building High Bays 1/2/3/4 / Main Power
PMN: H72-1200-01, -02
Drawing No.: EB-2508
Reference Figure: None

Find No. Part No.	Part Name	Part Function	a. Failure Mode b. Cause c. FMN d. Detection Method e. Correcting Action f. Time to Effect g. Timeframe	Failure Effect On System Performance	Failure Effect On Vehicle Systems And/Or Personnel Safety	Crit Cat
MLPW	Main Hoist West Lube Pump Motor Starter Relay	Energizes when Start relay M1 is energized and an overload of the main hoist west lube pump motor has not occurred	Fails de-energized	Main hoist west lube pump will not operate. Main hoist East lube pump will operate normally.	No effect.	3
			Fails energized	Main hoist west lube pump will run continuously when power is applied to crane.	No effect.	3
	Contacts	Close to supply power to main hoist west lube pump motor	Fails open	Main hoist west lube pump will not operate. Main hoist East lube pump will operate normally.	No effect.	3
			Fails closed	Main Hoist west lube pump will run continuously when power is applied to crane.	No effect.	3
MLPE	Main hoist East lube pump motor starter relay	Energizes when start relay M1 is energized and an overload of the main hoist East lube pump motor has not occurred.	Fails de-energized	Main hoist East lube pump will not operate. Main hoist west lube pump will operate normally.	No effect.	3
			Fails energized	Main hoist East lube pump will run continuously when power is applied to crane.	No effect.	3
	Contacts	Close to supply power to main hoist East lube pump motor	Fails open	Main hoist East lube lump will not operate. Main hoist west lube pump will operate normally.	No effect.	3
			Fails closed	Main hoist East lube pump will run continuously when power is applied to crane.	No effect.	3

Table 15. **Electrical FMEA - Main Power**

System/Subsystem: 325 Ton Bridge Cranes at the Vehicle Assembly Building High Bays 1/2/3/4 / Main Power
PMN: H72-1200-01, -02
Drawing No.: EB-2508
Reference Figure: None

Find No. Part No.	Part Name	Part Function	a. Failure Mode b. Cause c. FMN d. Detection Method e. Correcting Action f. Time to Effect g. Timeframe	Failure Effect On System Performance	Failure Effect On Vehicle Systems And/Or Personnel Safety	Crit Cat
TLPW	Trolley west lube pump motor starter relay	Energizes when start relay M1 is energized and an overload of the Trolley west lube pump motor has not occurred.	Fails de-energized	Trolley west lube pump will not operate. Trolley East lube pump will operate normally.	No effect.	3
			Fails energized	Trolley west lube pump will run continuously when power is applied to crane.	No effect.	3
	Contacts	Close to supply power to Trolley west lube pump motor	Fails open	Trolley west lube pump will not operate. Trolley East lube pump will operate normally.	No effect.	3
			Fails closed	Trolley west lube pump will run continuously when power is applied to crane.	No effect.	3
TLPE	Trolley East lube pump motor starter relay	Energizes when start relay M1 is energized and an overload of the Trolley East lube pump motor has not occurred.	Fails de-energized	Trolley East lube pump will not operate. Trolley west lube pump will operate normally.	No effect.	3
			Fails energized	Trolley East lube pump will run continuously when power is applied to crane.	No effect.	3
	Contacts	Close to supply power to Trolley East lube pump motor	Fails open	Trolley East lube pump will not operate. Trolley west lube pump will operate normally.	No effect.	3
			Fails closed	Trolley East lube pump will run continuously when power is applied to crane.	No effect.	3

Table 15. **Electrical FMEA - Main Power**

System/Subsystem: 325 Ton Bridge Cranes at the Vehicle Assembly Building High Bays 1/2/3/4 / Main Power
PMN: H72-1200-01, -02
Drawing No.: EB-2508
Reference Figure: None

Find No. Part No.	Part Name	Part Function	a. Failure Mode b. Cause c. FMN d. Detection Method e. Correcting Action f. Time to Effect g. Timeframe	Failure Effect On System Performance	Failure Effect On Vehicle Systems And/Or Personnel Safety	Crit Cat
I:2,5,A3	PLC input	Energizes when current flows through Main Hoist Cable Reel Eddy Current Clutch	Fails de-energized	PLC will detect loss of current through Eddy Current Clutch Coil and not allow cable Reel Brakes to be released. PLC will prevent hoist from operating.	No effect.	3
			Fails energized	PLC input will not de-energize if a failure has occurred in Cable Reel Drive. Cable will unwind from spool when no torque is applied and brakes are released. Requires previous failure in Cable Reel drive.	No effect.	3
O:1,9,C3	PLC output	Energizes main hoist Cable Reel contactor relay	Fails de-energized	Relay MCRC will not be energized. Contacts will not close to supply power to Cable Reel drive. PLC will not receive signal that Eddy Current Clutch Coil has current flow. Cable Reel Brakes will not be allowed to operate.	No effect.	3
			Fails energized	Cable reel drive will be activated when hoist motion is not commanded. Second cable Reel Brake will remain set.	No effect.	3
MCRC	Main hoist cable reel contactor relay	Energized by PLC to power main hoist cable reel drive	Fails de-energized	Contacts will not close to supply power to cable reel drive. PLC will not receive signal that Eddy Current Clutch Coil has current flow. Cable Reel Brakes will not be released. Hoist will not be allowed to operate.	No effect.	3

Table 15. **Electrical FMEA - Main Power**

System/Subsystem: 325 Ton Bridge Cranes at the Vehicle Assembly Building High Bays 1/2/3/4 / Main Power
PMN: H72-1200-01, -02
Drawing No.: EB-2508
Reference Figure: None

Find No. Part No.	Part Name	Part Function	a. Failure Mode b. Cause c. FMN d. Detection Method e. Correcting Action f. Time to Effect g. Timeframe	Failure Effect On System Performance	Failure Effect On Vehicle Systems And/Or Personnel Safety	Crit Cat
			Fails energized	Cable reel drive will be activated when hoist motion is not commanded. Cable Reel Brakes will remain set.	No effect.	3
	Contacts	Close to energize main hoist cable reel drive	Fails open	Cable reel drive will not be powered. PLC will not receive signal that Eddy Current Clutch Coil has current flow. Cable Reel Brakes will not be released. Hoist will not be allowed to operate.	No effect.	3
			Fails closed	Cable reel drive will be activated when hoist motion is not commanded. Cable Reel Brakes will remain set.	No effect.	3
O:1,9,D1	PLC output	Energizes main hoist cable Reel Brake contactor relay	Fails de-energized	Relay MCRB and PLC input will not be energized. PLC will not enable hoist to operate. All brakes will be set.	No effect.	3
			Fails energized	PLC inputs will detect cable Reel Brake is released when power is not supplied to cable reel drive. PLC will energize shunt trip of main circuit Breaker. Loss of power will cause cable Reel Brakes to set.	No effect.	3
MCRB	Main Hoist Cable Reel Brake Relay	Energized by PLC to release Main Hoist Cable Reel	Fails de-energized	Cable Reel brake will not release when commanded by PLC. PLC inputs will detect brake not released. PLC will not enable hoist motion.	No effect.	3

Table 15. **Electrical FMEA - Main Power**

System/Subsystem: 325 Ton Bridge Cranes at the Vehicle Assembly Building High Bays 1/2/3/4 / Main Power
PMN: H72-1200-01, -02
Drawing No.: EB-2508
Reference Figure: None

Find No. Part No.	Part Name	Part Function	a. Failure Mode b. Cause c. FMN d. Detection Method e. Correcting Action f. Time to Effect g. Timeframe	Failure Effect On System Performance	Failure Effect On Vehicle Systems And/Or Personnel Safety	Crit Cat
			Fails energized	PLC inputs will detect Cable Reel brake is released when power is not supplied to Cable Reel drive. PLC will energize shunt trip of main circuit Breaker. Loss of power will cause Cable Reel brakes to set.	No effect.	3
	Contacts	Close to supply power to Cable Reel brakes, releasing brakes	Fails open	Cable Reel brake will not release when commanded by PLC. PLC inputs will detect brake not released. PLC will not enable hoist motion.	No effect.	3
			Fails closed	PLC inputs will detect Cable Reel brake is released when power is not supplied to Cable Reel drive. PLC will energize shunt trip of main circuit Breaker. Loss of power will cause Cable Reel brakes to set.	No effect.	3
I:2,5,A5	PLC input	Energizes when main hoist Cable Reel brake contactor relay is energized	Fails de-energized	PLC will detect Cable Reel brake is not released when commanded by PLC. PLC will not enable hoist motion.	No effect.	3
			Fails energized	PLC inputs will detect Cable Reel brake is released when power is not supplied to Cable Reel drive. PLC will energize shunt trip of main circuit Breaker. Loss of power will cause Cable Reel brakes to set.	No effect.	3

Table 15. **Electrical FMEA - Main Power**

System/Subsystem: 325 Ton Bridge Cranes at the Vehicle Assembly Building High Bays 1/2/3/4 / Main Power
PMN: H72-1200-01, -02
Drawing No.: EB-2508
Reference Figure: None

Find No. Part No.	Part Name	Part Function	a. Failure Mode b. Cause c. FMN d. Detection Method e. Correcting Action f. Time to Effect g. Timeframe	Failure Effect On System Performance	Failure Effect On Vehicle Systems And/Or Personnel Safety	Crit Cat
I:2,5,A4	PLC input	Energizes when current flows through Auxiliary Hoist Cable Reel Eddy Current Clutch	Fails de-energized	PLC will detect loss of current through Eddy Current Clutch Coil and not allow Cable Reel brakes to be released. PLC will prevent hoist from operating.	No effect.	3
			Fails energized	PLC input will not de-energize if a failure has occurred in Cable Reel drive. Cable will unwind from spool when no torque is applied and brakes are released. Requires previous failure in Cable Reel drive.	No effect.	3
O:1,9,D2	PLC output	Energizes Auxiliary Hoist Cable Reel contactor relay	Fails de-energized	Relay ACRC will not be energized. Contacts will not close to supply power to Cable Reel drive. PLC will not receive signal that Eddy current clutch coil has current flow. Cable Reel brakes will not be released. Hoist will not be allowed to operate.	No effect.	3
			Fails energized	Cable Reel drive will be activated when hoist motion is not commanded. Second Cable Reel brake will remain set.	No effect.	3
ACRC	Auxiliary Hoist Cable Reel contactor relay	Energized by PLC to power Auxiliary hoist Cable Reel drive	Fails de-energized	Contacts will not close to supply power to Cable Reel drive. PLC will not receive signal that Eddy current clutch coil has current flow. Cable Reel brakes will not be released. Hoist will not be allowed to operate.	No effect.	3

Table 15. **Electrical FMEA - Main Power**

System/Subsystem: 325 Ton Bridge Cranes at the Vehicle Assembly Building High Bays 1/2/3/4 / Main Power
PMN: H72-1200-01, -02
Drawing No.: EB-2508
Reference Figure: None

Find No. Part No.	Part Name	Part Function	a. Failure Mode b. Cause c. FMN d. Detection Method e. Correcting Action f. Time to Effect g. Timeframe	Failure Effect On System Performance	Failure Effect On Vehicle Systems And/Or Personnel Safety	Crit Cat
			Fails energized	Cable Reel Drive will be activated when hoist motion is not commanded. Cable Reel brakes will remain set.	No effect.	3
	Contacts	Close to energize Auxiliary Hoist Cable Reel Drive	Fails open	Cable Reel Drive will not be powered. PLC will not receive signal that Eddy Current Clutch coil has current flow. Cable Reel brakes will not be released. Hoist will not be allowed to operate.	No effect.	3
			Fails closed	Cable Reel Drive will be activated when hoist motion is not commanded. Cable Reel brakes will remain set.	No effect.	3
O:1,9,D3	PLC output	Energizes Auxiliary Hoist Cable Reel brake contactor Relay	Fails de-energized	Relay ACRB and PLC input will not be energized. PLC will not enable hoist to operate. All brakes will be set.	No effect.	3
			Fails energized	PLC inputs will detect Cable Reel brake is released when power is not supplied to Cable Reel drive. PLC will energize Shunt Trip of Main Circuit Breaker. Loss of power will cause Cable Reel Brakes to set.	No effect.	3
ACRB	Auxiliary Hoist Cable Reel Brake Relay	Energized by PLC to release Auxiliary Hoist Cable Reel	Fails de-energized	Cable Reel Brake will not release when commanded by PLC. PLC inputs will detect brake not released. PLC will not enable hoist motion.	No effect.	3

Table 15. **Electrical FMEA - Main Power**

System/Subsystem: 325 Ton Bridge Cranes at the Vehicle Assembly Building High Bays 1/2/3/4 / Main Power
PMN: H72-1200-01, -02
Drawing No.: EB-2508
Reference Figure: None

Find No. Part No.	Part Name	Part Function	a. Failure Mode b. Cause c. FMN d. Detection Method e. Correcting Action f. Time to Effect g. Timeframe	Failure Effect On System Performance	Failure Effect On Vehicle Systems And/Or Personnel Safety	Crit Cat
			Fails energized	PLC inputs will detect Cable Reel Brake is released when power is not supplied to Cable Reel Drive. PLC will energize Shunt Trip of Main Circuit Breaker. Loss of power will cause Cable Reel Brakes to set.	No effect.	3
	Contacts	Close to supply power to Cable Reel Brakes, releasing brakes	Fails open	Cable Reel Brake will not release when commanded by PLC. PLC inputs will detect brake not released. PLC will not enable hoist motion.	No effect.	3
			Fails closed	PLC inputs will detect Cable Reel Brake is released when power is not supplied to Cable Reel Drive. PLC will energize Shunt Trip of Main Circuit Breaker. Loss of power will cause Cable Reel Brakes to set.	No effect.	3
I:2,5,A6	PLC Input	Energizes when Auxiliary Hoist Cable Reel Brake contactor relay is energized	Fails De-energized	PLC will detect Cable Reel Brake is not released when commanded by PLC. PLC will not enable hoist motion.	No effect.	3
			Fails Energized	PLC inputs will detect Cable Reel Brake is released when power is not supplied to Cable Reel Drive. PLC will energize Shunt Trip of Main Circuit Breaker. Loss of power will cause Cable Reel Brakes to set.	No effect.	3

Table 15. **Electrical FMEA - Main Power**

System/Subsystem: 325 Ton Bridge Cranes at the Vehicle Assembly Building High Bays 1/2/3/4 / Main Power
PMN: H72-1200-01, -02
Drawing No.: EB-2508
Reference Figure: None

Find No. Part No.	Part Name	Part Function	a. Failure Mode b. Cause c. FMN d. Detection Method e. Correcting Action f. Time to Effect g. Timeframe	Failure Effect On System Performance	Failure Effect On Vehicle Systems And/Or Personnel Safety	Crit Cat
PT	Power On Timer Relay	Energized when power is supplied to crane controls	Fails De-energized	Circuit will not be completed for MHWL and AHWL contacts to energize Shunt Trip of Main Circuit Breaker if Main or Auxiliary load block trips its Final Upper Limit Switch. Requires previous failure of first upper limit switch and operator error to trip switches.	No effect.	3
			Fails Energized	Contacts will be closed when power is applied to the crane. MHWL and AHWL contacts will be closed, energizing Shunt Trip for Main Circuit Breaker. Loss of power to crane.	No effect.	3
	Contact, Time Delay	Closed 1 second after relay PT is energized allowing normally closed weighted limit switch relay contacts to open	Fails Open	Circuit will not be completed for MHWL or AHWL contacts to energize Shunt Trip of Main Circuit Breaker if Main or Auxiliary load block trips its Final Upper Limit Switch. Requires previous failure of first upper limit switch and operator error to trip switches.	No effect.	3
			Fails Closed	Contacts will be closed when power is applied to the crane. MHWL and AHWL contacts will be closed, energizing Shunt Trip for Main Circuit Breaker. Loss of power to crane.	No effect.	3

Table 15. **Electrical FMEA - Main Power**

System/Subsystem: 325 Ton Bridge Cranes at the Vehicle Assembly Building High Bays 1/2/3/4 / Main Power
PMN: H72-1200-01, -02
Drawing No.: EB-2508
Reference Figure: None

Find No. Part No.	Part Name	Part Function	a. Failure Mode b. Cause c. FMN d. Detection Method e. Correcting Action f. Time to Effect g. Timeframe	Failure Effect On System Performance	Failure Effect On Vehicle Systems And/Or Personnel Safety	Crit Cat
None	Main Hoist Weighted Upper Limit Switch	Opens to de-energize relay MHWL. Contacts of relay MHWL will energize Shunt Trip of Main Circuit Breaker	Fails Open	Relay MHWL will be de-energized. MHWL contact will close, energizing Shunt Trip for Main Circuit Breaker. Loss of power to crane. All brakes will (remain) set.	No effect.	3
			Fails Closed	Shunt trip circuit Breaker will not be actuated when Main Hoist Load Block trips Final Upper Limit Switch. Requires previous failure of First upper limit switch to trip Final Upper Limit Switch and operator error to trip limit switches.	No effect.	3
MHWL	Main Hoist Weighted Upper Limit Relay	De-energized when Load Block trips Final Upper Limit Switch	Coil Fails Open	MHWL contact will close, energizing Shunt Trip for Main Circuit Breaker. Loss of power to crane. All brakes will (remain) set.	No effect.	3
	Contact, Normally closed	Closes to energize Shunt Trip of Main Circuit Breaker	Fails Open	Shunt Trip Circuit Breaker will not be actuated when Main Hoist Load Block trips Final Upper Limit Switch. Requires previous failure of first upper limit switch to trip Final Upper Limit Switch and operator error to trip limit switches.	No effect.	3
			Fails Closed	Shunt trip for Main Circuit Breaker will be de-energized. Loss of power to crane. All brakes will (remain) set.	No effect.	3

Table 15. **Electrical FMEA - Main Power**

System/Subsystem: 325 Ton Bridge Cranes at the Vehicle Assembly Building High Bays 1/2/3/4 / Main Power
PMN: H72-1200-01, -02
Drawing No.: EB-2508
Reference Figure: None

Find No. Part No.	Part Name	Part Function	a. Failure Mode b. Cause c. FMN d. Detection Method e. Correcting Action f. Time to Effect g. Timeframe	Failure Effect On System Performance	Failure Effect On Vehicle Systems And/Or Personnel Safety	Crit Cat
None	Auxiliary Hoist Weighted Upper Limit Switch	Opens to de-energize relay AHWL. Contacts of relay AHWL will energize Shunt Trip of Main Circuit Breaker.	Fails Open	Relay AHWL will be de-energized. AHWL contact will close, energizing Shunt Trip for Main Circuit Breaker. Loss of power to crane. All brakes will (remain) set.	No effect.	3
			Fails Closed	Shunt trip circuit Breaker will not be actuated when Auxiliary Hoist Load Block trip Final Upper Limit Switch. Requires previous failure of first upper limit switch to trip Final Upper Limit Switch and operator error to trip limit switches.	No effect.	3
AHWL	Auxiliary Hoist Weighted Limit Relay	De-energized when load block trips Final Upper Limit Switch	Fails De-energized	AHWL contact will close, energizing Shunt Trip for Main Circuit Breaker. Loss of power to crane. All brakes will (remain) set.	No effect.	3
			Fails Energized	Shunt trip circuit Breaker will not be actuated when Auxiliary Hoist Load Block trips Final Upper Limit Switch. Requires previous failure of first upper limit switch to trip Final Upper Limit Switch and operator error to trip limit switches.	No effect.	3
	Contact, Normally closed	Closed to energize Shunt Trip of Main Circuit Breaker	Fails Open	Shunt trip circuit Breaker will not be actuated when Auxiliary Hoist Load Block trips Final Upper Limit Switch. Requires previous failure of first upper limit switch to trip Final Upper Limit Switch and operator error to trip limit switches.	No effect.	3

Table 15. **Electrical FMEA - Main Power**

System/Subsystem: 325 Ton Bridge Cranes at the Vehicle Assembly Building High Bays 1/2/3/4 / Main Power
PMN: H72-1200-01, -02
Drawing No.: EB-2508
Reference Figure: None

Find No. Part No.	Part Name	Part Function	a. Failure Mode b. Cause c. FMN d. Detection Method e. Correcting Action f. Time to Effect g. Timeframe	Failure Effect On System Performance	Failure Effect On Vehicle Systems And/Or Personnel Safety	Crit Cat
			Fails Closed	Shunt trip for Main Circuit Breaker will be energized. Loss of power to crane. All brakes will (remain) set.	No effect.	3
RCR1	Circuit Breaker	Protects upstream circuitry from overloads in radio system number 1	Fails to operate	Upstream fuse FU6 will protect circuitry from overload in radio system. Requires previous failure to cause overload.	No effect.	3
			Prematurely operates	Loss of power to radio system number 1. Operator can still communicate over radio system number 2. Observers with remote E-stops can remove power to crane if unexpected motion occurs.	No effect.	3
None	Duplex Receptacle	Provides power for radio system number 1	Fails Open	Loss of power to radio system number 1. Operator can still communicate over radio system number 2. Observers with remote E-stops can remove power to crane if unexpected motion occurs is pressed.	No effect.	3
			Fails Shorted	Circuit Breaker RCR1 will protect circuitry from overload. Requires previous failure in radio system to cause overload. Operator can still communicate over radio system number 2. Observers with remote E-stops can remove power to crane if unexpected motion occurs.	No effect.	3

Table 15. **Electrical FMEA - Main Power**

System/Subsystem: 325 Ton Bridge Cranes at the Vehicle Assembly Building High Bays 1/2/3/4 / Main Power
PMN: H72-1200-01, -02
Drawing No.: EB-2508
Reference Figure: None

Find No. Part No.	Part Name	Part Function	a. Failure Mode b. Cause c. FMN d. Detection Method e. Correcting Action f. Time to Effect g. Timeframe	Failure Effect On System Performance	Failure Effect On Vehicle Systems And/Or Personnel Safety	Crit Cat
RCR2	Circuit Breaker	Protects upstream circuitry from overloads in radio system number 2	Fails to operate	Upstream fuse FU6 will protect circuitry from overload in radio system. Requires previous failure to cause overload.	No effect.	3
			Prematurely operates	Loss of power to radio system number 2. Operator can still communicate over radio system number 1. Observers with remote E-stops can remove power to crane if unexpected motion occurs.	No effect.	3
None	Duplex Receptacle	Provides power for radio system number 2	Fails Open	Loss of power to radio system number 2. Operator can still communicate over radio system number 1. Observers with remote E-stops can remove power to crane if unexpected motion occurs.	No effect.	3
			Fails Shorted	Circuit Breaker RCR2 will protect circuitry from overload. Requires previous failure in radio system to cause overload. Operator can still communicate over radio system number 1. Observers with remote E-stops can remove power to crane if unexpected motion occurs.	No effect.	3

Electrical FMEA, PLC

Wire harnesses, cables, or connectors were not analyzed in the Electrical FMEA for this system since a single failure (open or short) could not result in the loss of life or vehicle. (Ref. NSTS 22206, Paragraph 4.4.1.b.2).

This FMEA section references Ederer drawing EB-2508, specifically the following sheets:

Sheet	Title
52	PLC Motion Control Elementary
52A	PLC Motion Control Elementary
53	PLC Rack # 0
54	PLC Rack # 1
55	PLC Rack # 2
56	GENIUS I/O Modules 1-6
57	GENIUS I/O Modules 7-11
58	Computer Controlled VGA Displays

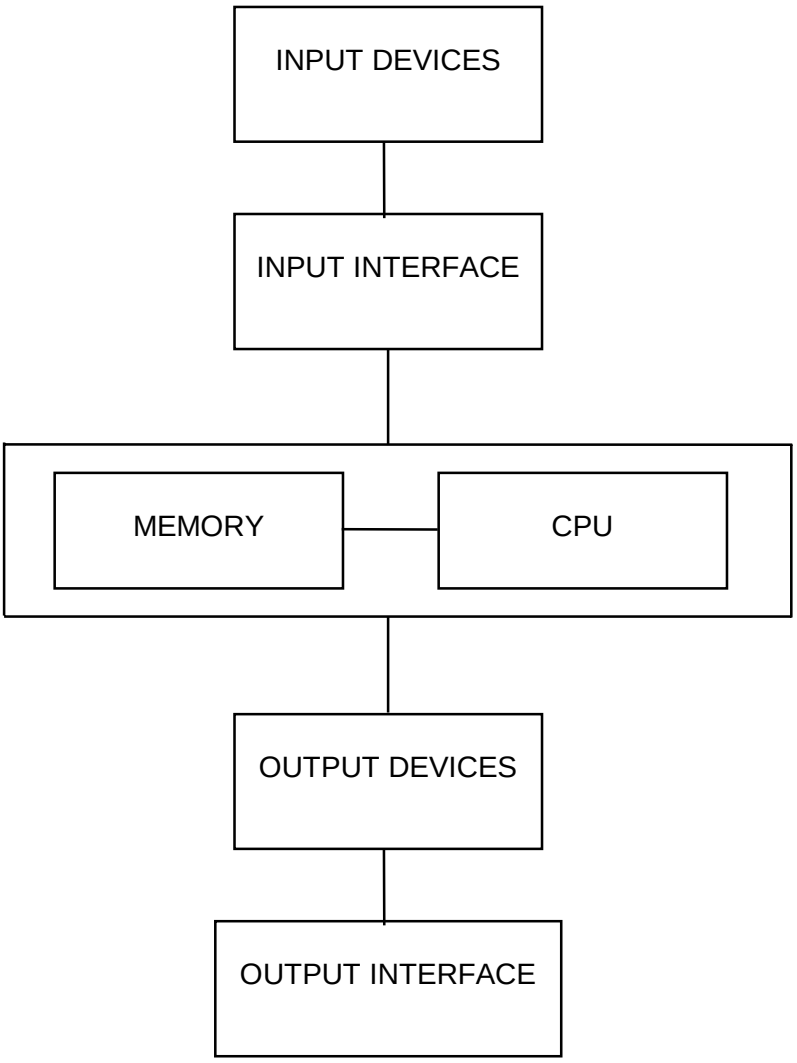

Figure 23. PLC Configuration Diagram

Table 16. **Electrical FMEA - PLC Primary Mode**

System/Subsystem: 325 Ton Bridge Cranes at the Vehicle Assembly Building High Bays 1/2/3/4 / PLC
PMN: H72-1200-01, -02
Drawing No.: EB-2508
Reference Figure: None

Find No. Part No.	Part Name	Part Function	a. Failure Mode b. Cause c. FMN d. Detection Method e. Correcting Action f. Time to Effect g. Timeframe	Failure Effect On System Performance	Failure Effect On Vehicle Systems And/Or Personnel Safety	Crit Cat
UPS	Uninterruptable Power Supply	Supplies / filters power to PLC	Fails to output	PLC will not be powered up. Crane will be disabled and brakes will be set.	No effect.	3
MCAB2	Motion Control Armature Board #2	Provides interface from Delta Tau motion control board to Main Hoist, Auxiliary Hoist, Trolley, and Bridge motor control modules.	Fails to operate	Delta Tau controller will detect failure of interface board or will detect loss of encoder feedback. PLC will detect load imbalance between East and West Hoist motors. Crane will be disabled and brakes will be set.	No effect.	3
	TB1-29, 31	Provides analog output to Trolley secondary motor control module current reference and PLC input.	Fails low or no output	Would require previous failure in trolley primary drive to use secondary drive. Delta Tau controller would detect following error and signal PLC to disable drive and set brakes.	No effect.	3
			Fails high output	Would require previous failure in trolley primary drive to use secondary drive. Delta Tau controller would detect following error and signal PLC to disable drive and set brakes.	No effect.	3
	TB1-30, 32	Provides analog output to Bridge South motor control module current reference and PLC input.	Fails low or no output	Loss of power to south drive wheels. Bridge would start to skew on rails. Delta Tau controller would detect following error and signal PLC to disable drive and set brakes.	No effect.	3

Table 16. **Electrical FMEA - PLC Primary Mode**

System/Subsystem: 325 Ton Bridge Cranes at the Vehicle Assembly Building High Bays 1/2/3/4 / PLC
PMN: H72-1200-01, -02
Drawing No.: EB-2508
Reference Figure: None

Find No. Part No.	Part Name	Part Function	a. Failure Mode b. Cause c. FMN d. Detection Method e. Correcting Action f. Time to Effect g. Timeframe	Failure Effect On System Performance	Failure Effect On Vehicle Systems And/Or Personnel Safety	Crit Cat
			Fails high output	Increase in power to south drive wheels. Bridge would start to skew on rails. Delta Tau controller would detect following error and signal PLC to disable drive and set brakes.	No effect.	3
	TB1-43, 45	Provides analog output to Main Hoist East motor control module current reference and PLC input.	Fails low or no output	Loss of power to Main Hoist East motor. Delta Tau controller will increase current commands attempting to achieve commanded speed. PLC will detect load imbalance and disable drives and set brakes. Delta Tau controller would detect following error and signal PLC to disable drive and set brakes.	No effect.	3
			Fails high output	Increase in power to Main Hoist East motor. Delta Tau controller will decrease current commands attempting to achieve commanded speed. PLC will detect load imbalance and disable drives and set brakes. Delta Tau controller would detect following error and signal PLC to disable drive and set brakes.	No effect.	3

Table 16. **Electrical FMEA - PLC Primary Mode**

System/Subsystem: 325 Ton Bridge Cranes at the Vehicle Assembly Building High Bays 1/2/3/4 / PLC
PMN: H72-1200-01, -02
Drawing No.: EB-2508
Reference Figure: None

Find No. Part No.	Part Name	Part Function	a. Failure Mode b. Cause c. FMN d. Detection Method e. Correcting Action f. Time to Effect g. Timeframe	Failure Effect On System Performance	Failure Effect On Vehicle Systems And/Or Personnel Safety	Crit Cat
	TB1-44, 46	Provides analog output to Auxiliary Hoist East motor control module current reference and PLC input.	Fails low or no output	Loss of power to Auxiliary Hoist East motor. Delta Tau controller will increase current commands attempting to achieve commanded speed. PLC will detect load imbalance and disable drives and set brakes. Delta Tau controller would detect following error and signal PLC to disable drive and set brakes.	No effect.	3
			Fails high output	Increase in power to Auxiliary Hoist East motor. Delta Tau controller will decrease current commands attempting to achieve commanded speed. PLC will detect load imbalance and disable drives and set brakes. Delta Tau controller would detect following error and signal PLC to disable drive and set brakes.	No effect.	3
MCAB1	Motion Control Armature Board #1	Provides interface from Delta Tau motion control board to Main Hoist , Auxiliary Hoist, Trolley, and Bridge motor control modules.	Fails to operate	Delta Tau controller will detect failure of interface board or will detect loss of controller feedback. PLC will detect load imbalance between East and West Hoist motors. Crane will be disabled and brakes will be set.	No effect.	3

Table 16. **Electrical FMEA - PLC Primary Mode**

System/Subsystem: 325 Ton Bridge Cranes at the Vehicle Assembly Building High Bays 1/2/3/4 / PLC
PMN: H72-1200-01, -02
Drawing No.: EB-2508
Reference Figure: None

Find No. Part No.	Part Name	Part Function	a. Failure Mode b. Cause c. FMN d. Detection Method e. Correcting Action f. Time to Effect g. Timeframe	Failure Effect On System Performance	Failure Effect On Vehicle Systems And/Or Personnel Safety	Crit Cat
	TB1-29, 31	Provides analog output to Trolley primary motor control module current reference and PLC input.	Fails low or no output	Loss of power to Trolley Drive motors. Delta Tau controller will increase current commands attempting to achieve commanded speed. Delta Tau controller will detect following error and signal PLC to disable drive and set brakes.	No effect.	3
			Fails high output	Increase of power to Trolley Drive motors. Delta Tau controller will try to decrease current command attempting to achieve commanded speed. Motor control module will limit any acceleration. Delta Tau controller will detect following error and signal PLC to disable drive and set brakes.	No effect.	3
	TB1-30, 32	Provides analog output to Bridge North motor control module current reference and PLC input.	Fails low or no output	Loss of power to North drive wheels. Bridge would start to skew on rails. Delta Tau controller would detect following error and signal PLC to disable drive and set brakes.	No effect.	3
			Fails high output	Increase in power to North drive wheels. Bridge would start to skew on rails. Delta Tau controller would detect following error and signal PLC to disable drive and set brakes.	No effect.	3

Table 16. **Electrical FMEA - PLC Primary Mode**

System/Subsystem: 325 Ton Bridge Cranes at the Vehicle Assembly Building High Bays 1/2/3/4 / PLC
PMN: H72-1200-01, -02
Drawing No.: EB-2508
Reference Figure: None

Find No. Part No.	Part Name	Part Function	a. Failure Mode b. Cause c. FMN d. Detection Method e. Correcting Action f. Time to Effect g. Timeframe	Failure Effect On System Performance	Failure Effect On Vehicle Systems And/Or Personnel Safety	Crit Cat
	TB1-43, 45	Provides analog output to Main Hoist West motor control module current reference and PLC input.	Fails low or no output	Loss of power to Main Hoist West motor. Delta Tau controller will increase current commands attempting to achieve commanded speed. PLC will detect load imbalance and disable drives and set brakes. Delta Tau controller would detect following error and signal PLC to disable drive and set brakes.	No effect.	3
			Fails high output	Increase in power to Main Hoist West motor. Delta Tau controller will decrease current commands attempting to achieve commanded speed. PLC will detect load imbalance and disable drives and set brakes. Delta Tau controller would detect following error and signal PLC to disable drive and set brakes.	No effect.	3
	TB1-44, 46	Provides analog output to Auxiliary Hoist West motor control module current reference and PLC input.	Fails low or no output	Loss of power to Auxiliary Hoist West motor . Delta Tau controller will increase current commands attempting to achieve commanded speed. PLC will detect load imbalance and disable drives and set brakes. Delta Tau controller would detect following error and signal PLC to disable drive and set brakes.	No effect.	3

Table 16. **Electrical FMEA - PLC Primary Mode**

System/Subsystem: 325 Ton Bridge Cranes at the Vehicle Assembly Building High Bays 1/2/3/4 / PLC
PMN: H72-1200-01, -02
Drawing No.: EB-2508
Reference Figure: None

Find No. Part No.	Part Name	Part Function	a. Failure Mode b. Cause c. FMN d. Detection Method e. Correcting Action f. Time to Effect g. Timeframe	Failure Effect On System Performance	Failure Effect On Vehicle Systems And/Or Personnel Safety	Crit Cat
			Fails high output	Increase in power to Auxiliary Hoist West motor. Delta Tau controller will decrease current commands attempting to achieve commanded speed. PLC will detect load imbalance and disable drives and set brakes. Delta Tau controller would detect following error and signal PLC to disable drive and set brakes.	No effect.	3
MCEI2	Motion Control Encoder Interface Board #2	Provides interface from Main Hoist , Auxiliary Hoist, Trolley, and Bridge Encoders to Delta Tau motion control board control modules.	Fails to operate	Delta Tau controller will detect loss of feedback and signal PLC to disable drives and set brakes. PLC will detect difference between encoder and tachometer feedback and disable drives and set brakes.	No effect.	3
	TB1-19, 20, 21, 22	Provides digital input for Bridge Northwest encoder	Fails low or no input	Delta Tau controller will detect illegal encoder transitions equivalent to loss of feedback and signal PLC to disable drives and set brakes. Delta Tau controller will react to anti-skew inputs and keep crane centered on rails.	No effect.	3
			Fails high input	Delta Tau controller will detect illegal encoder transitions equivalent to loss of feedback and signal PLC to disable drives and set brakes. Delta Tau controller will react to anti-skew inputs and keep crane centered on rails.	No effect.	3

Table 16. **Electrical FMEA - PLC Primary Mode**

System/Subsystem: 325 Ton Bridge Cranes at the Vehicle Assembly Building High Bays 1/2/3/4 / PLC
PMN: H72-1200-01, -02
Drawing No.: EB-2508
Reference Figure: None

Find No. Part No.	Part Name	Part Function	a. Failure Mode b. Cause c. FMN d. Detection Method e. Correcting Action f. Time to Effect g. Timeframe	Failure Effect On System Performance	Failure Effect On Vehicle Systems And/Or Personnel Safety	Crit Cat
	TB1-13, 14, 15, 16	Provides digital input for Trolley East encoder	Fails low or no input	Delta Tau controller will detect illegal encoder transitions equivalent to loss of feedback and signal PLC to disable drives and set brakes.	No effect.	3
			Fails high input	Delta Tau controller will detect illegal encoder transitions equivalent to loss of feedback and signal PLC to disable drives and set brakes.	No effect.	3
	TB1-7,8,9,10,11,12	Provides digital input for Main Hoist East encoder	Fails low or no input	Delta Tau controller will detect illegal encoder transitions equivalent to loss of feedback and signal PLC to disable drives and set brakes. PLC will detect imbalance between East and West encoders and mismatch with tachometer feedback and disable drives and set brakes.	No effect.	3
			Fails high input	Delta Tau controller will detect illegal encoder transitions equivalent to loss of feedback and signal PLC to disable drives and set brakes PLC will detect imbalance between East and West encoders and mismatch with tachometer feedback and disable drives and set brakes.	No effect.	3

Table 16. **Electrical FMEA - PLC Primary Mode**

System/Subsystem: 325 Ton Bridge Cranes at the Vehicle Assembly Building High Bays 1/2/3/4 / PLC
PMN: H72-1200-01, -02
Drawing No.: EB-2508
Reference Figure: None

Find No. Part No.	Part Name	Part Function	a. Failure Mode b. Cause c. FMN d. Detection Method e. Correcting Action f. Time to Effect g. Timeframe	Failure Effect On System Performance	Failure Effect On Vehicle Systems And/Or Personnel Safety	Crit Cat
	TB1-1, 2, 3, 4, 5, 6	Provides digital input for Auxiliary Hoist East encoder	Fails low or no input	Delta Tau controller will detect illegal encoder transitions equivalent to loss of feedback and signal PLC to disable drives and set brakes. PLC will detect imbalance between East and West encoders and disable drives and set brakes.	No effect.	3
			Fails high input	Delta Tau controller will detect illegal encoder transitions equivalent to loss of feedback and signal PLC to disable drives and set brakes. PLC will detect imbalance between East and West encoders and disable drives and set brakes	No effect.	3
MCEI1	Motion Control Encoder Interface Board #1	Provides interface from Main Hoist , Auxiliary Hoist, Trolley, and Bridge Encoders to Delta Tau motion control board control modules.	Fails to operate	Delta Tau controller will detect loss of feedback and signal PLC to disable drives and set brakes. PLC will detect difference between encoder and tachometer feedback and disable drives and set brakes.	No effect.	3
	TB1-19, 20, 21, 22	Provides digital input for Bridge Southwest encoder	Fails low or no input	Delta Tau controller will detect illegal encoder transitions equivalent to loss of feedback and signal PLC to disable drives and set brakes. Delta Tau controller will react to anti-skew inputs and keep crane centered on rails.	No effect.	3

Table 16. **Electrical FMEA - PLC Primary Mode**

System/Subsystem: 325 Ton Bridge Cranes at the Vehicle Assembly Building High Bays 1/2/3/4 / PLC
PMN: H72-1200-01, -02
Drawing No.: EB-2508
Reference Figure: None

Find No. Part No.	Part Name	Part Function	a. Failure Mode b. Cause c. FMN d. Detection Method e. Correcting Action f. Time to Effect g. Timeframe	Failure Effect On System Performance	Failure Effect On Vehicle Systems And/Or Personnel Safety	Crit Cat
			Fails high input	Delta Tau controller will detect illegal encoder transitions equivalent to loss of feedback and signal PLC to disable drives and set brakes. Delta Tau controller will react to anti-skew inputs and keep crane centered on rails.	No effect.	3
	TB1-13, 14, 15, 16	Provides digital input for Trolley West encoder	Fails low or no input	Delta Tau controller will detect illegal encoder transitions equivalent to loss of feedback and signal PLC to disable drives and set brakes.	No effect.	3
			Fails high input	Delta Tau controller will detect illegal encoder transitions equivalent to loss of feedback and signal PLC to disable drives and set brakes.	No effect.	3
	TB1-7,8,9,10,11,12	Provides digital input for Main Hoist West encoder	Fails low or no input	Delta Tau controller will detect illegal encoder transitions equivalent to loss of feedback and signal PLC to disable drives and set brakes. PLC will detect imbalance between East and West encoders and disable drives and set brakes.	No effect.	3
			Fails high input	Delta Tau controller will detect illegal encoder transitions equivalent to loss of feedback and signal PLC to disable drives and set brakes. PLC will detect imbalance between East and West encoders and disable drives and set brakes	No effect.	3

Table 16. **Electrical FMEA - PLC Primary Mode**

System/Subsystem: 325 Ton Bridge Cranes at the Vehicle Assembly Building High Bays 1/2/3/4 / PLC
PMN: H72-1200-01, -02
Drawing No.: EB-2508
Reference Figure: None

Find No. Part No.	Part Name	Part Function	a. Failure Mode b. Cause c. FMN d. Detection Method e. Correcting Action f. Time to Effect g. Timeframe	Failure Effect On System Performance	Failure Effect On Vehicle Systems And/Or Personnel Safety	Crit Cat
	TB1-1, 2, 3, 4, 5, 6	Provides digital input for Auxiliary Hoist West encoder	Fails low or no input	Delta Tau controller will detect illegal encoder transitions equivalent to loss of feedback and signal PLC to disable drives and set brakes. PLC will detect imbalance between East and West encoders and mismatch with tachometer feedback and will disable drives and set brakes.	No effect.	3
			Fails high input	Delta Tau controller will detect illegal encoder transitions equivalent to loss of feedback and signal PLC to disable drives and set brakes. PLC will detect imbalance between East and West encoders and mismatch with tachometer feedback and will disable drives and set brakes.	No effect.	3
PMAC PS	± 15 Volt Power Supply	Converts 120 Volts AC to ± 15 Volt DC to power Delta Tau Interface cards	Fails low or no input	Loss of power to analog output boards resulting in lower than expected current commands. Delta Tau controller will try to increase current command to achieve speed commanded. PLC will detect imbalance between East and West Hoist armature currents. Delta Tau controller will detect following error and signal PLC to disable drives and set brakes.	No effect.	3

Table 16. **Electrical FMEA - PLC Primary Mode**

System/Subsystem: 325 Ton Bridge Cranes at the Vehicle Assembly Building High Bays 1/2/3/4 / PLC
PMN: H72-1200-01, -02
Drawing No.: EB-2508
Reference Figure: None

Find No. Part No.	Part Name	Part Function	a. Failure Mode b. Cause c. FMN d. Detection Method e. Correcting Action f. Time to Effect g. Timeframe	Failure Effect On System Performance	Failure Effect On Vehicle Systems And/Or Personnel Safety	Crit Cat
			Fails high input	Higher voltage to analog output boards resulting in higher than expected current commands. Delta Tau controller will try to reduce current command to achieve commanded speed. PLC will detect imbalance between East and West Hoist armature currents since East and West motors are driven from separate boards. Delta Tau controller will detect following error and signal PLC to disable drives and set brakes.	No effect.	3
FU52B	Fuse, PMAC power supply	Protects upstream circuitry from over loads in PMAC power supply	Premature operation	Loss of power to analog output boards resulting in lower than expected current commands. Delta Tau controller will try to increase current command to achieve speed commanded. PLC will detect imbalance between East and West Hoist armature currents. Delta Tau controller will detect following error and signal PLC to disable drives and set brakes.	No effect.	3

Table 16. **Electrical FMEA - PLC Primary Mode**

System/Subsystem: 325 Ton Bridge Cranes at the Vehicle Assembly Building High Bays 1/2/3/4 / PLC
PMN: H72-1200-01, -02

Drawing No.: EB-2508
Reference Figure: None

Find No. Part No.	Part Name	Part Function	a. Failure Mode b. Cause c. FMN d. Detection Method e. Correcting Action f. Time to Effect g. Timeframe	Failure Effect On System Performance	Failure Effect On Vehicle Systems And/Or Personnel Safety	Crit Cat
			Fails to operate	Requires previous failure to cause overload. Overload will damage PMAC power supply leading to loss of power to analog output boards, resulting in lower than expected current commands. Delta Tau controller will try to increase current command to achieve speed commanded. PLC will detect imbalance between East and West Hoist armature currents. Delta Tau controller will detect following error and signal PLC to disable drives and set brakes.	No effect.	3
25PS	+25 Volt Power Supply	Converts 120 Volts AC to +25 Volts DC to power 24 VDC for 24 VDC PLC output cards	Fails low or no output	Loss of 24 VDC outputs from PLC. Outputs will disable run inputs to motor control modules, which will disable drives. PLC will set brakes and disable Auxiliary torque inputs to Hoist drives which will prevent torque proving, Hoists will not operate.	No effect.	3 3
			Fails high input	Will lead to damage to individual inputs and outputs of the 24 VDC output card. Individual outputs are assessed in FMEA sections relative to their operation.	No effect.	3

Table 16. **Electrical FMEA - PLC Primary Mode**

System/Subsystem: 325 Ton Bridge Cranes at the Vehicle Assembly Building High Bays 1/2/3/4 / PLC
PMN: H72-1200-01, -02
Drawing No.: EB-2508
Reference Figure: None

Find No. Part No.	Part Name	Part Function	a. Failure Mode b. Cause c. FMN d. Detection Method e. Correcting Action f. Time to Effect g. Timeframe	Failure Effect On System Performance	Failure Effect On Vehicle Systems And/Or Personnel Safety	Crit Cat
FU52B	Fuse, 25PS	Protects upstream circuitry from over loads in +25 Volt DC power supply	Premature operation	Loss of 24 VDC outputs from PLC. Outputs will disable run inputs to motor control modules which will disable drives. PLC will set brakes and disable auxiliary torque inputs to hoist drives which will prevent torque proving. Hoist will not operate.	No effect.	3
			Fails to operate	Requires previous failure to cause overload. Excessive current will lead to damage of 25PS resulting in loss of 24 VDC outputs from PLC. Outputs will disable run inputs to motor control modules which will disable drives. PLC will set brakes and disable auxiliary torque inputs to Hoist drives which will prevent torque proving. Hoist will not operate.	No effect.	3
FU52A	Fuse, 5PS	Protects upstream circuitry from over loads in +5 Volt DC power supply	Premature operation	Loss of power to encoders. Delta Tau controller will detect loss of feedback and signal PLC to disable drives and set brakes. PLC will detect mismatch between encoder and tachometer feedback and disable drives and set brakes.	No effect.	3

Table 16. **Electrical FMEA - PLC Primary Mode**

System/Subsystem: 325 Ton Bridge Cranes at the Vehicle Assembly Building High Bays 1/2/3/4 / PLC
PMN: H72-1200-01, -02

Drawing No.: EB-2508
Reference Figure: None

Find No. Part No.	Part Name	Part Function	a. Failure Mode b. Cause c. FMN d. Detection Method e. Correcting Action f. Time to Effect g. Timeframe	Failure Effect On System Performance	Failure Effect On Vehicle Systems And/Or Personnel Safety	Crit Cat
			Fails to operate	Requires previous failure to cause overload. Excessive current will damage of 5PS power supply leading to loss of power to encoders. Delta Tau controller will detect loss of feedback and signal PLC to disable drives and set brakes. PLC will detect mismatch between encoder and tachometer feedback and disable drives and set brakes.	No effect.	3
5PS	+5 Volt power supply	Converts 120 Volts AC to +5 Volts DC to power Delta Tau interface cards and encoders	Fails low or no output	Loss of power to encoders. Delta Tau controller will detect loss of feedback and signal PLC to disable drives and set brakes. PLC will detect mismatch between encoder and tachometer feedback and disable drives and set brakes.	No effect.	3
			Fails high input	Excessive voltage will damage encoder or feedback path leading to loss of feedback, which will be detected by the Delta TAU controller. Delta Tau controller will signal PLC to disable drives and set brakes.	No effect.	3

Table 16. **Electrical FMEA - PLC Primary Mode**

System/Subsystem: 325 Ton Bridge Cranes at the Vehicle Assembly Building High Bays 1/2/3/4 / PLC
PMN: H72-1200-01, -02
Drawing No.: EB-2508
Reference Figure: None

Find No. Part No.	Part Name	Part Function	a. Failure Mode b. Cause c. FMN d. Detection Method e. Correcting Action f. Time to Effect g. Timeframe	Failure Effect On System Performance	Failure Effect On Vehicle Systems And/Or Personnel Safety	Crit Cat
RACK 0, SLOT 0	55 Watt Power supply	Provides electrical power for boards in Rack 0	Fails low or no output	PLC and Delta Tau motion controller will not run. Crane will not operate. If failure occurs while running, Delta Tau motion controller will detect low voltage and shut down before memory can be corrupted. PLC outputs will default to low or open output states when power is lost which will disable all drives and set brakes.	No effect.	3
			Fails high output	Power supply is protected against overvoltage or overcurrent faults. PLC and Delta Tau controller will operate normally unless damaged by excessive high voltage. Damage to either PLC or Delta Tau motion controller will cause associated watchdog timer to remove control power and open main line contactor	No effect.	3
RACK 0, SLOT 1 IC697CPU781	Central Processing Unit	Central Processing Unit for PLC	Fails to operate	Watchdog timer output will remain de-energized, disabling control power. Outputs will remain in low or open state. Drives will not be enabled. Brakes will remain set.	No effect.	3
			Locks up while operating	Crane motion will continue operation at last commanded speed and direction. Watchdog timer will detect scan cycle exceeds preset time limit and remove control power and open mainline contactor which will disable all drives and set brakes.	No effect.	3

Table 16. **Electrical FMEA - PLC Primary Mode**

System/Subsystem: 325 Ton Bridge Cranes at the Vehicle Assembly Building High Bays 1/2/3/4 / PLC
PMN: H72-1200-01, -02
Drawing No.: EB-2508
Reference Figure: None

Find No. Part No.	Part Name	Part Function	a. Failure Mode b. Cause c. FMN d. Detection Method e. Correcting Action f. Time to Effect g. Timeframe	Failure Effect On System Performance	Failure Effect On Vehicle Systems And/Or Personnel Safety	Crit Cat
			a. Unsolicited command b. Internal component or software failure c. 09FY120-001.016 d. None e. None f. 1 Second g. N/A	PLC could initiate or continue a crane motion in an uncommanded direction or speed.	Could allow loss of life / vehicle or loss (damage) of a vehicle system.	1
RACK 0, SLOT 2	Bus Transmitter	Provides bus communication between PLC Rack 0 and PLC Racks 1 and 2	Fails to operate	Loss of communication to PLC Racks 1 and 2. PLC inputs and outputs on Rack 1 and 2 will default to de-energized or open state, which will de-energize drive enable, DC loop contactor and brake relays. All drives will be disabled and all brakes will set.	No effect.	3
RACK 0, SLOT 3	ADS display interface	Provides interface between PLC and Main Hoist cruise control terminal	Fails to operate	Loss of ability to set cruise control parameters. Cruise control will still operate using last function and parameter set and at a speed set by operator. Absolute position of main load hook on ADS display will not be updated. Change in position will be displayed on position displays. PLC will detect failure of ADS display interface.	No effect.	3

Table 16. **Electrical FMEA - PLC Primary Mode**

System/Subsystem: 325 Ton Bridge Cranes at the Vehicle Assembly Building High Bays 1/2/3/4 / PLC
PMN: H72-1200-01, -02
Drawing No.: EB-2508
Reference Figure: None

Find No. Part No.	Part Name	Part Function	a. Failure Mode b. Cause c. FMN d. Detection Method e. Correcting Action f. Time to Effect g. Timeframe	Failure Effect On System Performance	Failure Effect On Vehicle Systems And/Or Personnel Safety	Crit Cat
None	ADS display	Provides interface between PLC and operator cruise control functions	Fails to operate	Loss of ability to set cruise control parameters. Cruise control will still operate using last function and parameter set and at a speed set by operator. Absolute position of main load hook on ADS display will not be updated. Change in position will be displayed on position displays. PLC will detect failure of ADS display.	No effect.	3
RACK 0, SLOT 4	GENIUS bus interface	Provides interface between PLC and GENIUS I/O modules in control cab	Fails to operate	PLC will detect GENIUS bus failure and shut down crane. Control inputs will be inactive due to bus failure. Crane will not operate.	No effect.	3
RACK 0, SLOT 5	Analog Output card	Provides analog outputs from PLC	Fails to operate	Auxiliary Hoist torque proving will not be successful. Auxiliary Hoist will not operate. Auxiliary Hoist field current reference will be zero. Auxiliary Hoist West and East motor controller will detect loss of field current and shut down. Auxiliary Hoist brakes will (remain) set.	No effect.	3
RACK 0, SLOT 6	Analog input card	Provides analog inputs to PLC	Fails to operate	PLC will detect VME communications failure and shut down crane or PLC will detect difference between weighing system #1 and #2 for both Main and Auxiliary Hoist. PLC will not allow either Main or Auxiliary Hoist to operate.	No effect.	3

Table 16. **Electrical FMEA - PLC Primary Mode**

System/Subsystem: 325 Ton Bridge Cranes at the Vehicle Assembly Building High Bays 1/2/3/4 / PLC
PMN: H72-1200-01, -02
Drawing No.: EB-2508
Reference Figure: None

Find No. Part No.	Part Name	Part Function	a. Failure Mode b. Cause c. FMN d. Detection Method e. Correcting Action f. Time to Effect g. Timeframe	Failure Effect On System Performance	Failure Effect On Vehicle Systems And/Or Personnel Safety	Crit Cat
RACK 0, SLOT 7	Analog input card	Provides analog inputs to PLC	Fails to operate	PLC will detect VME communications failure and shut down crane or PLC will detect difference between weighing system #1 and #2 for both Main and Auxiliary Hoist. PLC will not allow either Main or Auxiliary Hoist to operate.	No effect.	3
RACK 0, SLOT 8	Analog Output card	Provides analog outputs from PLC	Fails to operate	Main Hoist torque proving will not be successful. Main Hoist will not operate. Main Hoist field current reference will be zero. Main Hoist West and East motor controller will detect loss of field current and shut down. Main Hoist brakes will (remain) set.	No effect.	3
RACK 0, SLOT 9	Delta Tau motion control card	Provides primary servo control of motor control modules	Fails to operate	Watchdog timer output will remain de-energized, disabling control power. Drives will not be enabled. Brakes will remain set. CPU will detect VME communications failure and shut down crane.	No effect.	3
			Locks up while operating	Crane will continue motion in direction and speed commanded at time of failure. Operator can stop motion by pressing E-stop or switching the control power off. Delta Tau watchdog timer will time out and de-energize relay WD2. Relay WD2 will cause start relays M1, M2, and PLC input to be de-energized which will cause all drivers to be disabled and all brakes to set.	No effect.	3

Table 16. **Electrical FMEA - PLC Primary Mode**

System/Subsystem: 325 Ton Bridge Cranes at the Vehicle Assembly Building High Bays 1/2/3/4 / PLC
PMN: H72-1200-01, -02
Drawing No.: EB-2508
Reference Figure: None

Find No. Part No.	Part Name	Part Function	a. Failure Mode b. Cause c. FMN d. Detection Method e. Correcting Action f. Time to Effect g. Timeframe	Failure Effect On System Performance	Failure Effect On Vehicle Systems And/Or Personnel Safety	Crit Cat
RACK 1, SLOT 0	55 Watt Power supply	Provides electrical power for boards in Rack 1	Fails to operate	Loss of power to PLC input and output cards in rack 1. Loss of communication to PLC racks 1 and 2. PLC inputs and outputs on rack 1 and 2 will default to de-energized or open state, which will de-energize drive enable, DC loop contactor and brake relays. All drives will be disabled and all brakes will be set. PLC will detect communication failure and shut down crane operation due to computer fault.	No effect.	3
RACK 1, SLOT 1	Bus receiver	Provides bus communication between PLC racks 0, 1, and 2	Fails to operate	Loss of communication to PLC racks 1 and 2. PLC inputs and outputs on rack 1 and 2 will default to de-energized or open state, which will de-energize drive enable, DC loop contactor and brake relays. All drives will be disabled and all brakes will be set. PLC will detect communication failure and shut down crane operation due to computer fault.	No effect.	3
RACK 1, SLOT 2	TTL input card	Provides TTL inputs to PLC	Fails to operate	Loss of feedback from Main Hoist wire rope drum resolver. PLC will detect communication failure with input card and shut down crane operation due to computer fault. Main hook absolute position on ADS display will not be updated.	No effect.	3

Table 16. **Electrical FMEA - PLC Primary Mode**

System/Subsystem: 325 Ton Bridge Cranes at the Vehicle Assembly Building High Bays 1/2/3/4 / PLC
PMN: H72-1200-01, -02

Drawing No.: EB-2508
Reference Figure: None

Find No. Part No.	Part Name	Part Function	a. Failure Mode b. Cause c. FMN d. Detection Method e. Correcting Action f. Time to Effect g. Timeframe	Failure Effect On System Performance	Failure Effect On Vehicle Systems And/Or Personnel Safety	Crit Cat
RACK 1, SLOT 3	TTL input card	Provides TTL inputs to PLC	Fails to operate	Loss of feedback from Main Hoist and Auxiliary Hoist Hook rotation resolvers. PLC will detect communication failure with input card and shut down crane operation due to computer fault.	No effect.	3
RACK 1, SLOT 4	24 VDC input card	Provides 24 VDC inputs to PLC	Fails to operate	PLC will detect communication failure with input card and shut down crane operation due to computer fault. Loss of Main Hoist East and West fault inputs which signals PLC that an SCR overtemp has occurred. PLC will disable Main Hoist drives and set brakes.	No effect.	3
RACK 1, SLOT 5	24 VDC output card	Provides 24 VDC outputs from PLC	Fails to operate	PLC will detect communication failure with output card and shut down crane operation due to computer fault. Outputs will default to de-energized state. Torque proving will not be enabled by PLC preventing Main and Auxiliary Hoists from operating. Run inputs to motor control modules will disable all drives.	No effect.	3
RACK 1, SLOT 6	24 VDC output card	Provides 24 VDC outputs from PLC	Fails to operate	PLC will detect communication failure with output card and shut down crane operation due to computer fault. Outputs will default to de-energized state disabling hook rotation drive for Main and Auxiliary load blocks.	No effect.	3

Table 16. **Electrical FMEA - PLC Primary Mode**

System/Subsystem: 325 Ton Bridge Cranes at the Vehicle Assembly Building High Bays 1/2/3/4 / PLC
PMN: H72-1200-01, -02
Drawing No.: EB-2508
Reference Figure: None

Find No. Part No.	Part Name	Part Function	a. Failure Mode b. Cause c. FMN d. Detection Method e. Correcting Action f. Time to Effect g. Timeframe	Failure Effect On System Performance	Failure Effect On Vehicle Systems And/Or Personnel Safety	Crit Cat
RACK 1, SLOT 7	120 VAC output card	Provides 120 VAC outputs from PLC	Fails to operate	PLC will detect communication failure with output card and shut down crane operation due to computer fault. Outputs will default to de-energized state disabling all drives and setting all brakes.	No effect.	3
RACK 1, SLOT 8	120 VAC output card	Provides 120 VAC outputs from PLC	Fails to operate	PLC will detect communication failure with output card and shut down crane operation due to computer fault. Outputs will default to de-energized state disabling Main Hoist, Auxiliary Hoist, and Trolley primary and secondary drives. Main and Auxiliary Hoist brakes will be set by output fault . PLC will detect Trolley drives not enabled and set Trolley brakes.	No effect.	3
RACK 1, SLOT 9	120 VAC output card	Provides 120 VAC outputs from PLC	Fails to operate	PLC will detect communication failure with output card and shut down crane operation due to computer fault. Outputs will default to de-energized state. Watchdog timer output will de-energize causing start relays M1, M2, and PLC input to be de-energized. Crane control power will be removed, disabling all drives and setting all brakes.	No effect.	3

Table 16. **Electrical FMEA - PLC Primary Mode**

System/Subsystem: 325 Ton Bridge Cranes at the Vehicle Assembly Building High Bays 1/2/3/4 / PLC
PMN: H72-1200-01, -02
Drawing No.: EB-2508
Reference Figure: None

Find No. Part No.	Part Name	Part Function	a. Failure Mode b. Cause c. FMN d. Detection Method e. Correcting Action f. Time to Effect g. Timeframe	Failure Effect On System Performance	Failure Effect On Vehicle Systems And/Or Personnel Safety	Crit Cat
RACK 2, SLOT 0	55 Watt Power supply	Provides electrical power for boards in Rack 2	Fails to operate	Loss of power to PLC input and output cards in rack 2. PLC inputs and outputs on rack 2 will default to de-energized or open state. PLC will detect drives not enabled and shut down crane operation and set all brakes. PLC will also detect Travel, Equalizer, Rope spooling, and overspeed limit switch trips causing shutdown of crane operations and setting brakes.	No effect.	3
RACK 2, SLOT 1	Bus receiver	Provides bus communication between PLC racks 1 and 2	Fails to operate	Loss of communication to PLC input and output cards in rack 2. PLC inputs and outputs on rack 2 will default to de-energized or open state. PLC will detect drives not enabled and shut down crane operation and set all brakes. PLC will also detect Travel, Equalizer, Rope spooling, and overspeed limit switch trips causing shutdown of crane operations and setting brakes.	No effect.	3

Table 16. **Electrical FMEA - PLC Primary Mode**

System/Subsystem: 325 Ton Bridge Cranes at the Vehicle Assembly Building High Bays 1/2/3/4 / PLC
PMN: H72-1200-01, -02
Drawing No.: EB-2508
Reference Figure: None

Find No. Part No.	Part Name	Part Function	a. Failure Mode b. Cause c. FMN d. Detection Method e. Correcting Action f. Time to Effect g. Timeframe	Failure Effect On System Performance	Failure Effect On Vehicle Systems And/Or Personnel Safety	Crit Cat
RACK 2, SLOT 2	120 VAC output card	Provides 120 VAC outputs from PLC	Fails to operate	PLC will detect communication failure with output card and shut down crane operation due to computer fault. Outputs will default to de-energized state causing blower starter relays on Main hoist, Auxiliary Hoist, Trolley, and bridge not to energize. PLC will detect blowers not running and prevent Hoist from operating. PLC will not enable bridge drives.	No effect.	3
RACK 2, SLOT 3	120 VAC input card	Provides 120 VAC inputs to PLC	Fails to operate	PLC will detect communication failure with input card and shut down crane operation due to computer fault. Inputs will default to de-energized state . PLC will detect all drives are disabled and set all brakes. PLC will also detect final limits are tripped on Main Hoist, Auxiliary Hoist, Trolley, and Bridge and not allow crane operation.	No effect.	3
RACK 2, SLOT 4	120 VAC input card	Provides 120 VAC inputs to PLC	Fails to operate	PLC will detect communication failure with input card and shut down crane operation due to computer fault. Inputs will default to de-energized state . PLC will detect overloads in all four crane motions and disable drives and set brakes. PLC will also detect ropespooling and equalizer error on both Hoist and set brakes.	No effect.	3

Table 16. **Electrical FMEA - PLC Primary Mode**

System/Subsystem: 325 Ton Bridge Cranes at the Vehicle Assembly Building High Bays 1/2/3/4 / PLC
PMN: H72-1200-01, -02
Drawing No.: EB-2508
Reference Figure: None

Find No. Part No.	Part Name	Part Function	a. Failure Mode b. Cause c. FMN d. Detection Method e. Correcting Action f. Time to Effect g. Timeframe	Failure Effect On System Performance	Failure Effect On Vehicle Systems And/Or Personnel Safety	Crit Cat
RACK 2, SLOT 5	120 VAC input card	Provides 120 VAC inputs to PLC	Fails to operate	PLC will detect VME communications failure and shut down crane or loss of start input will disable all crane motions and set all brakes or loss of Main and Auxiliary Hoist drive select inputs will cause circuit Breaker not matching drive select error. PLC will shut down crane operation and set all brakes.	No effect.	3
RACK 2, SLOT 6	Analog input card	Provides analog inputs to PLC	Fails to operate	PLC will detect VME communications failure and shut down crane or crane motion will be prevented by PLC control of Motor control module if Delta Tau motion controller DAC output fails high. Requires previous failure of DAC output.	No effect.	3
RACK 2, SLOT 7	Analog input card	Provides analog inputs to PLC	Fails to operate	PLC will detect VME communications failure and shut down crane or PLC will detect difference between tachometer feedback and encoder feedback and disable drives and set brakes or torque proving will not be successful and main and Auxiliary Hoist will not operate.	No effect.	3

Table 16. **Electrical FMEA - PLC Primary Mode**

System/Subsystem: 325 Ton Bridge Cranes at the Vehicle Assembly Building High Bays 1/2/3/4 / PLC
PMN: H72-1200-01, -02
Drawing No.: EB-2508
Reference Figure: None

Find No. Part No.	Part Name	Part Function	a. Failure Mode b. Cause c. FMN d. Detection Method e. Correcting Action f. Time to Effect g. Timeframe	Failure Effect On System Performance	Failure Effect On Vehicle Systems And/Or Personnel Safety	Crit Cat
GENIUS I/O Module #1	Analog Input / Output module	Provides analog Inputs and outputs to / from PLC and control cab	Fails to operate	PLC will detect GENIUS bus failure and shut down crane and set brakes due to computer failure or PLC will detect difference between potentiometers 1 and 2 for Main Hoist Master switch, Main Hoist Float Master switch, Auxiliary Hoist Master switch or Auxiliary Hoist Float Master switch causing PLC to disable drives and set brakes	No effect.	3
GENIUS I/O Module #2	Analog Input / Output module	Provides analog Inputs and outputs to / from PLC and control cab	Fails to operate	PLC will detect GENIUS bus failure and shut down crane and set brakes due to computer failure or PLC will detect difference between potentiometers 1 and 2 for Trolley Master switch, Bridge Master switch, Main Hoist rotation Master switch or Auxiliary Hoist rotation Master switch causing PLC to disable drives and set brakes	No effect.	3
GENIUS I/O Module #3	Analog Input / Output module	Provides analog Inputs and outputs to / from PLC and control cab	Fails to operate	PLC will detect GENIUS bus failure and shut down crane and set brakes due to computer failure or PLC will detect difference between potentiometers 1 and 2 for Main Hoist Master switch, Main Hoist Float Master switch, Auxiliary Hoist Master switch or Auxiliary Hoist Float Master switch causing PLC to disable drives and set brakes.	No effect.	3

Table 16. **Electrical FMEA - PLC Primary Mode**

System/Subsystem: 325 Ton Bridge Cranes at the Vehicle Assembly Building High Bays 1/2/3/4 / PLC
PMN: H72-1200-01, -02
Drawing No.: EB-2508
Reference Figure: None

Find No. Part No.	Part Name	Part Function	a. Failure Mode b. Cause c. FMN d. Detection Method e. Correcting Action f. Time to Effect g. Timeframe	Failure Effect On System Performance	Failure Effect On Vehicle Systems And/Or Personnel Safety	Crit Cat
GENIUS I/O Module #4	Analog Input / Output module	Provides analog Inputs and outputs to / from PLC and control cab	Fails to operate	PLC will detect GENIUS bus failure and shut down crane and set brakes due to computer failure or PLC will detect difference between potentiometers 1 and 2 for Trolley Master switch, Bridge Master switch, Main Hoist rotation Master switch or Auxiliary Hoist rotation Master switch causing PLC to disable drives and set brakes.	No effect.	3
GENIUS I/O Module #5	120 VAC input module	Provides 120 Volt AC inputs to PLC from control cab	Fails to operate	PLC will detect GENIUS bus failure and shut down crane and set brakes due to computer failure or Main Hoist will not operate due to loss of control inputs to PLC including Hoist, Lower, Float Hoist, Float Lower, Float Foot switch, Float Thumb switch, Rotate Clockwise, and Rotate Counter-Clockwise.	No effect.	3
GENIUS I/O Module #6	120 VAC input module	Provides 120 Volt AC inputs to PLC from control cab	Fails to operate	PLC will detect GENIUS bus failure and shut down crane and set brakes due to computer failure or Main Hoist will not operate due to loss of control inputs to PLC including Hoist, Lower, Float Hoist, Float Lower, Float Foot switch, Float Thumb switch, Rotate Clockwise, and Rotate Counter-Clockwise.	No effect.	3

Table 16. **Electrical FMEA - PLC Primary Mode**

System/Subsystem: 325 Ton Bridge Cranes at the Vehicle Assembly Building High Bays 1/2/3/4 / PLC
PMN: H72-1200-01, -02
Drawing No.: EB-2508
Reference Figure: None

Find No. Part No.	Part Name	Part Function	a. Failure Mode b. Cause c. FMN d. Detection Method e. Correcting Action f. Time to Effect g. Timeframe	Failure Effect On System Performance	Failure Effect On Vehicle Systems And/Or Personnel Safety	Crit Cat
GENIUS I/O Module #7	120 VAC input module	Provides 120 Volt AC inputs to PLC from control cab	Fails to operate	PLC will detect GENIUS bus failure and shut down crane and set brakes due to computer failure or Auxiliary Hoist will not operate due to loss of control inputs to PLC including Hoist, Lower, Float Hoist, Float Lower, Float Foot switch, Float Thumb switch, Rotate Clockwise, and Rotate Counter-Clockwise. Trolley will not operate due to loss of control inputs including North, South, Brake release Thumb switch, fast, and slow.	No effect.	3
GENIUS I/O Module #8	120 VAC input module	Provides 120 Volt AC inputs to PLC from control cab	Fails to operate	PLC will detect GENIUS bus failure and shut down crane and set brakes due to computer failure or Auxiliary Hoist will not operate due to loss of control inputs to PLC including Hoist, Lower, Float Hoist, Float Lower, Float Foot switch, Float Thumb switch, Rotate Clockwise, and Rotate Counter-Clockwise. Trolley will not operate due to loss of control inputs including North, South, Brake release Thumb switch, fast, and slow.	No effect.	3

Table 16. **Electrical FMEA - PLC Primary Mode**

System/Subsystem: 325 Ton Bridge Cranes at the Vehicle Assembly Building High Bays 1/2/3/4 / PLC
PMN: H72-1200-01, -02
Drawing No.: EB-2508
Reference Figure: None

Find No. Part No.	Part Name	Part Function	a. Failure Mode b. Cause c. FMN d. Detection Method e. Correcting Action f. Time to Effect g. Timeframe	Failure Effect On System Performance	Failure Effect On Vehicle Systems And/Or Personnel Safety	Crit Cat
GENIUS I/O Module #9	120 VAC input module	Provides 120 Volt AC inputs to PLC from control cab	Fails to operate	PLC will detect GENIUS bus failure and shut down crane and set brakes due to computer failure or bridge will not operate due to loss of control inputs to PLC including Fast, Slow, Brake release Thumb switch West and East and unable to reset Trolley, Bridge Main Hoist Rotate, and Auxiliary Hoist rotate displays unable to start Main Hoist cruise functions.	No effect.	3
GENIUS I/O Module #10	120 VAC input module	Provides 120 Volt AC inputs to PLC from control cab	Fails to operate	PLC will detect GENIUS bus failure and shut down crane and set brakes due to computer failure or bridge will not operate due to loss of control inputs to PLC including Fast, Slow, Brake release Thumb switch ,West and East and unable to start main hoist or Auxiliary cruise functions and unable to perform redundant contact error test or reset crane errors.	No effect.	3
GENIUS I/O Module #11	Relay output module	Provides relay outputs from PLC to control cab	Fails to operate	PLC will detect GENIUS bus failure and shut down crane and set brakes due to computer failure or warning light on control cab console will not illuminate when error occurs. PLC will shut down crane and set brakes if fault occurs and fault will be displayed on ADS display.	No effect.	3

Table 16. **Electrical FMEA - PLC Primary Mode**

System/Subsystem: 325 Ton Bridge Cranes at the Vehicle Assembly Building High Bays 1/2/3/4 / PLC
PMN: H72-1200-01, -02
Drawing No.: EB-2508
Reference Figure: None

Find No. Part No.	Part Name	Part Function	a. Failure Mode b. Cause c. FMN d. Detection Method e. Correcting Action f. Time to Effect g. Timeframe	Failure Effect On System Performance	Failure Effect On Vehicle Systems And/Or Personnel Safety	Crit Cat
None	Error reset keyswitch	Energizes GENIUS when turned by operator . Clears previous errors in PLC	Fails open	Unable to reset crane errors	No effect.	3
			Fails shorted	Faults will be cleared from the PLC when they occur. Fault will still exist causing error to re-occur. Requires previous failure to cause fault.	No effect.	3
7872-01	CPU Board	Central processing Unit for prolog computer. Receives position data from PLC across GENIUS bus and generates position display	Fails to operate	Associated VGA display will not start up to display position dial and digital position information. PLC will detect communication error with prolog computer watchdog causing the main line contactor to dropout, disabling all drives and setting all brakes.	No effect.	3
			Locks up while operating	Associated VGA display will freeze and continue to display last current information. PLC will detect communication error with prolog computer watchdog causing the main line contactor to dropout, disabling all drives and setting all brakes.	No effect.	3
7353-01	VGA Board	Video graphics board which generates position display	Fails to operate	Associated VGA display will not start up to display position dial and digital position information. Operator will not be able to use position display for position information.	No effect.	3

Table 16. **Electrical FMEA - PLC Primary Mode**

System/Subsystem: 325 Ton Bridge Cranes at the Vehicle Assembly Building High Bays 1/2/3/4 / PLC
PMN: H72-1200-01, -02
Drawing No.: EB-2508
Reference Figure: None

Find No. Part No.	Part Name	Part Function	a. Failure Mode b. Cause c. FMN d. Detection Method e. Correcting Action f. Time to Effect g. Timeframe	Failure Effect On System Performance	Failure Effect On Vehicle Systems And/Or Personnel Safety	Crit Cat
			Locks up while operating	Associated VGA display will freeze and continue to display last current information. PLC will detect communication error with prolog computer watchdog causing the main line contactor to dropout, disabling all drives and setting all brakes.	No effect.	3
7511	GENIUS I / O interface board	Provides GENIUS bus communication for prolog commuter	Fails to operate	Prolog computer will display last current information on VGA screen. PLC will detect communication error with prolog computer watchdog causing the main line contactor to dropout, disabling all drives and setting all brakes.	No effect.	3
7923	Power Supply	Converts 120 volts AC for use by prolog computer	Fails to operate	Associated VGA position display will not start up to display position dial and digital position information. PLC will detect communication error with prolog computer watchdog causing the main line contactor to dropout, disabling all drives and setting all brakes.	No effect.	3
None	VGA Display	Displays position information in control cab, driven by prolog computer	Fails to operate	Associated VGA position display will not start up to display position dial and digital position information. Operator will not be able to use position display for position information.	No effect.	3

Table 16. **Electrical FMEA - PLC Primary Mode**

System/Subsystem: 325 Ton Bridge Cranes at the Vehicle Assembly Building High Bays 1/2/3/4 / PLC
PMN: H72-1200-01, -02
Drawing No.: EB-2508
Reference Figure: None

Find No. Part No.	Part Name	Part Function	a. Failure Mode b. Cause c. FMN d. Detection Method e. Correcting Action f. Time to Effect g. Timeframe	Failure Effect On System Performance	Failure Effect On Vehicle Systems And/Or Personnel Safety	Crit Cat
VGAPS	+12 VDC power supply	Converts 120 Volts AC to +12 Volts DC to power VGA displays in control cab.	Fails low or no output	VGA position display will not start up to display position dial and digital position information. Operator will not be able to use position display for position information.	No effect.	3
			Fails high output	Possible damage to prolog computers leading to loss VGA position information. Operator will not be able to use position for crane operations	No effect.	3
None	Resistor	Provides termination of GENIUS data bus	Fails open	Improper termination of serial data bus will lead to communication errors, which will be detected by PLC. PLC will shut down crane operations due to computer fault.	No effect.	3
			Fails shorted	Shorted serial data bus will lead to communication errors, which will be detected by PLC. PLC will shut down crane operations due to computer fault.	No effect.	3
None	Voltage Stabilizer	Supplies / Stabilizes operating voltage for prolog #1, #2, and #3 (GENIUS I/O #21, #22, and #23)	Fails to operate	Associated Prolog modules operating voltage will not be stabilized. PLC will detect communication error with prolog computer ‘s watchdog causing the mainline contactor to drop out, disabling all drives and setting all brakes.	No effect.	3

Electrical FMEA, PLC Backup Mode

Wire harnesses, cables, or connectors were not analyzed in the Electrical FMEA for this system since a single failure (open or short) could not result in the loss of life or vehicle. (Ref. NSTS 22206, Paragraph 4.4.1.b.2)

This FMEA section references Ederer drawing EB-2508, specifically the following sheets:

Sheet	Title
52	PLC Motion Control Elementary
52A	PLC Motion Control Elementary
53	PLC Rack # 0
54	PLC Rack # 1
55	PLC Rack # 2
56	GENIUS I/O Modules 1-6
57	GENIUS I/O Modules 7-11
58	Computer Controlled VGA Displays

In Backup mode, it is assumed that a failure has occurred in the East drive which was detected and caused the Main / Auxiliary hoist to be disabled. The controls were configured for the single drive mode of operation by switching the drive select switch to West drive only and switching the East drive circuit beaker off. The Main / Auxiliary hoist are now configured for their backup mode of operation whereby only the west drive will be utilized. The following “Back-Up” mode FMEA indicates only the areas where the system performance is altered. All other failure effects on system performance are identical to that of the “Normal” mode of operation.

Table 17. **Electrical FMEA - PLC Backup Mode**

System/Subsystem: 325 Ton Bridge Cranes at the Vehicle Assembly Building High Bays 1/2/3/4 / PLC
PMN: H72-1200-01, -02
Drawing No.: EB-2508
Reference Figure: None

Find No. Part No.	Part Name	Part Function	a. Failure Mode b. Cause c. FMN d. Detection Method e. Correcting Action f. Time to Effect g. Timeframe	Failure Effect On System Performance	Failure Effect On Vehicle Systems And/Or Personnel Safety	Crit Cat
MCAB2	Motion Control Armature Board #2	Provides interface from Delta Tau motion control board to Main Hoist, Auxiliary Hoist, Trolley, and Bridge motor control modules.	Fails to operate	Delta Tau controller will detect failure of interface board or will detect loss of encoder feedback. Crane will be disabled and brakes will be set.	No effect.	3
	TB1-43, 45	Provides analog output to Main Hoist East motor control module current reference and PLC input.	Fails low or no output	No effect. Power to East drive has been removed by opening MECB and will not affect operation of the hoist until the East drive is repaired and switched back on line.	No effect.	3
			Fails high output	No effect. Power to East drive has been removed by opening MECB and will not affect operation of the hoist until the East drive is repaired and switched back on line.	No effect.	3
	TB1-44, 46	Provides analog output to Auxiliary Hoist East motor control module current reference and PLC input.	Fails low or no output	No effect. Power to East drive has been removed by opening MECB and will not affect operation of the hoist until the East drive is repaired and switched back on line.	No effect.	3
			Fails high output	No effect. Power to East drive has been removed by opening MECB and will not affect operation of the hoist until the East drive is repaired and switched back on line.	No effect.	3

Table 17. **Electrical FMEA - PLC Backup Mode**

System/Subsystem: 325 Ton Bridge Cranes at the Vehicle Assembly Building High Bays 1/2/3/4 / PLC
PMN: H72-1200-01, -02
Drawing No.: EB-2508
Reference Figure: None

Find No. Part No.	Part Name	Part Function	a. Failure Mode b. Cause c. FMN d. Detection Method e. Correcting Action f. Time to Effect g. Timeframe	Failure Effect On System Performance	Failure Effect On Vehicle Systems And/Or Personnel Safety	Crit Cat
MCAB1	Motion Control Armature Board #1	Provides interface from Delta Tau motion control board to Main Hoist , Auxiliary Hoist, Trolley, and Bridge motion control modules.	Fails to operate	Delta Tau controller will detect failure of interface board or will detect loss of encoder feedback. Crane will be disabled and brakes will be set.	No effect.	3
	TB1-43, 45	Provides analog output to Main Hoist West motor control module current reference and PLC input.	Fails low or no output	MWMCM will receive too low of a current to achieve or maintain speed commanded. Delta Tau motion controller will detect following error and signal PLC to disable Hoist and set brakes if motor speed does not match speed commanded.	No effect.	3
			Fails high output	MWMCM will receive too high of a current to achieve or maintain speed commanded. Delta Tau motion controller will detect following error and signal PLC to shut down Hoist and set brakes. Load will rise if Delta Tau controller fails to detect following error.	No effect.	3
	TB1-44, 46	Provides analog output to Auxiliary Hoist West motor control module current reference and PLC input.	Fails low or no output	AWMCM will receive too low of a current to achieve or maintain speed commanded. Delta Tau motion controller will detect following error and signal PLC to shut down Hoist drive and set brakes.	No effect.	3

Table 17. **Electrical FMEA - PLC Backup Mode**

System/Subsystem: 325 Ton Bridge Cranes at the Vehicle Assembly Building High Bays 1/2/3/4 / PLC
PMN: H72-1200-01, -02
Drawing No.: EB-2508
Reference Figure: None

Find No. Part No.	Part Name	Part Function	a. Failure Mode b. Cause c. FMN d. Detection Method e. Correcting Action f. Time to Effect g. Timeframe	Failure Effect On System Performance	Failure Effect On Vehicle Systems And/Or Personnel Safety	Crit Cat
			Fails high output	AWMCM will receive too high of a current to achieve or maintain speed commanded. Delta Tau motion controller will detect following error and signal PLC to shut down Hoist drive and set brakes.	No effect.	3
PMAC PS	± 15 Volt Power Supply	Converts 120 Volts AC to ± 15 Volt DC to power Delta Tau Interface cards	Fails low or no input	Loss of power to analog output boards resulting in lower than expected current commands. Delta Tau controller will try to increase current command to achieve speed commanded. Delta Tau controller will detect following error and signal PLC to disable drives and set brakes.	No effect.	3
			Fails high input	Higher voltage to analog output boards resulting in higher than expected current commands. Delta Tau controller will try reduce current command to achieve commanded speed. Delta Tau controller will detect following error and signal PLC to disable drives and set brakes.	No effect.	3

Table 17. **Electrical FMEA - PLC Backup Mode**

System/Subsystem: 325 Ton Bridge Cranes at the Vehicle Assembly Building High Bays 1/2/3/4 / PLC
PMN: H72-1200-01, -02
Drawing No.: EB-2508
Reference Figure: None

Find No. Part No.	Part Name	Part Function	a. Failure Mode b. Cause c. FMN d. Detection Method e. Correcting Action f. Time to Effect g. Timeframe	Failure Effect On System Performance	Failure Effect On Vehicle Systems And/Or Personnel Safety	Crit Cat
FU52B	Fuse, PMAC power supply	Protects upstream circuitry from over loads in PMAC power supply	Premature operation	Loss of power to analog output boards resulting in lower than expected current commands. Delta Tau controller will try to increase current command to achieve speed commanded. Delta Tau controller will detect following error and signal PLC to disable drives and set brakes.	No effect.	3
			Fails to operate	Requires previous failure to cause overload. Overload will damage PMAC power supply leading to loss of power to analog output boards, resulting in lower than expected current commands. Delta Tau controller will try to increase current command to achieve speed commanded. Delta Tau controller will detect following error and signal PLC to disable drives and set brakes.	No effect.	3

Electrical FMEA, Main Hoist Primary Mode
Wire harnesses, cables, or connectors were not analyzed in the Electrical FMEA for this system since a single failure (open or short) could not result in the loss of life or vehicle. (Ref. NSTS 22206, Paragraph 4.4.1.b.2)

This FMEA section references Ederer drawing EB-2508, specifically the following sheets:

Sheet	Title
4	Main Hoist West Motor Control Elementary
5	Main Hoist East Motor Control Elementary
6	Main Hoist Control Elementary
7	Main Hoist Control Elementary
8	Main Hoist Control Elementary
9	Main Hoist Control Elementary
10	Main Hoist West Motor Control Electronics Elementary
11	Main Hoist East Motor Control Electronics Elementary
12	Main Hoist Resolver Positioning System
13	Main Hoist Encoder Positioning System
14	Main Hoist Lower Block Weighting System
15	Main Hoist Upper Block Weighting System #1
16	Main Hoist Upper Block Weighting System #2
17	Main Hoist Lower Block Rotate Motor Control Elementary
18	Main Hoist Lower Block Rotate Control Elementary
19	Main Hoist Lower Block Rotate Positioning System

Table 18. **Electrical FMEA - Main Hoist Primary Mode**

System/Subsystem: 325 Ton Bridge Cranes at the Vehicle Assembly Building High Bays 1/2/3/4 / Main Hoist
PMN: H72-1200-01, -02
Drawing No.: EB-2508
Reference Figure: None

Find No. Part No.	Part Name	Part Function	a. Failure Mode b. Cause c. FMN d. Detection Method e. Correcting Action f. Time to Effect g. Timeframe	Failure Effect On System Performance	Failure Effect On Vehicle Systems And/Or Personnel Safety	Crit Cat
MWCB	Circuit Breaker	Protects circuitry from overloads in Main Hoist West Drive circuit	Prematurely Operates	Loss of power to Main Hoist West Motor Control Module. Phase monitor relay will drop out ready relays, disabling drive. PLC will detect drive not enabled and set brakes.	No effect.	3
			Fails to Operate	Upstream 500A Main Circuit Breaker will trip. Loss of power to crane. All brakes will set. Requires previous failure to cause overload.	No effect.	3
MWIT	Isolation Transformer	Isolates Main Hoist West Drive circuit to reduce electrical noise and interference	Fails Open	Loss of one or more power phases. Phase monitor relay will drop out ready relays, disabling drive. PLC will detect drive not enabled and set brakes.	No effect.	3
			Fails Shorted	Overload will trip MWCB. Phase Monitor relay will drop out ready relays, disabling drive. PLC will detect drive not enabled and set brakes.	No effect.	3
MWFU1, MWFU2, MWFU3	Fuse	Protects circuitry from overloads in Main Hoist West Motor Blower circuit	Prematurely Operates	Loss of one or more power phases. Phase monitor relay will drop out ready relays, disabling drive. PLC will detect drive not enabled and set brakes.	No effect.	3

Table 18. **Electrical FMEA - Main Hoist Primary Mode**

System/Subsystem: 325 Ton Bridge Cranes at the Vehicle Assembly Building High Bays 1/2/3/4 / Main Hoist
PMN: H72-1200-01, -02
Drawing No.: EB-2508
Reference Figure: None

Find No. Part No.	Part Name	Part Function	a. Failure Mode b. Cause c. FMN d. Detection Method e. Correcting Action f. Time to Effect g. Timeframe	Failure Effect On System Performance	Failure Effect On Vehicle Systems And/Or Personnel Safety	Crit Cat
			Fails to Operate	Associated fuse in current loop will protect against overloads. Phase monitor relay will drop out Ready Relays, disabling drive. PLC will detect drive not enabled and set brakes. Requires previous failure to cause overload.	No effect.	3
None	Surge Suppresser	Protects circuitry from power surges	Prematurely Operates	Nuisance tripping of circuit Breaker BNCB.	No effect.	3
			Fails to Operate	Loss of power surge protection for downstream circuitry.	No effect.	3
ED-2412	Capacitor network	Eliminates power system ringing on input of field power module	Fails open	Power system ringing will be inputted to field power module. Possible damage to field power module.	No effect.	3
			Fails shorted	Field power module 20 amp fuses will blow. Following error will be detected by PLC and set brakes	No effect.	3
MWPM	Main West Phase Monitor Relay	Monitors 3 phase power for proper phase relationships	Fails De-energized	Contact will not close to energize relay MWRDY and MWFRDY. West drive will be disabled. PLC will detect drive not enabled and set brakes.	No effect.	3
			Fails Energized	Improper phase or voltage imbalance will be detected by MWFSA. MWFSA will disable west drive. PLC will detect drive not enabled and set brakes. Requires previous failure to cause improper phase or voltage.	No effect.	3

Table 18. **Electrical FMEA - Main Hoist Primary Mode**

System/Subsystem: 325 Ton Bridge Cranes at the Vehicle Assembly Building High Bays 1/2/3/4 / Main Hoist
PMN: H72-1200-01, -02
Drawing No.: EB-2508
Reference Figure: None

Find No. Part No.	Part Name	Part Function	a. Failure Mode b. Cause c. FMN d. Detection Method e. Correcting Action f. Time to Effect g. Timeframe	Failure Effect On System Performance	Failure Effect On Vehicle Systems And/Or Personnel Safety	Crit Cat
	Contact	Opens to De-energize relays MWRDY, MWFRDY if improper phase relationship is detected.	Fails Open	Relays MWRDY and MWFRDY will not be energized. West drive will be disabled. PLC will detect drive not enabled and set brakes.	No effect.	3
			Fails Closed	Improper phase or voltage imbalance will be detected by MWFSA. MWFSA will disable west drive. PLC will detect drive not enabled and set brakes. Requires previous failure to cause improper phase or voltage.	No effect.	3
MWBOL	Overload Switch	Switch contact opens when excessive current is detected in Main Hoist west motor blower circuit.	Prematurely Operates	MWBOL contact will open, de-energizing relay MWBS. Loss of power to main hoist west blower motor and relay MWBR. MWBR contact will de-energize PLC input. PLC will set error bit . Error will cause hoist to decelerate to stop and brakes to set.	No effect.	3
			Fails to Operate	MWFU1-3 will protect against overload. Hoist drive will continue to operate. Motor overtemp sensors will detect if hoist motor overheats. Requires previous failure to cause overload.	No effect.	3

Table 18. **Electrical FMEA - Main Hoist Primary Mode**

System/Subsystem: 325 Ton Bridge Cranes at the Vehicle Assembly Building High Bays 1/2/3/4 / Main Hoist
PMN: H72-1200-01, -02
Drawing No.: EB-2508
Reference Figure: None

Find No. Part No.	Part Name	Part Function	a. Failure Mode b. Cause c. FMN d. Detection Method e. Correcting Action f. Time to Effect g. Timeframe	Failure Effect On System Performance	Failure Effect On Vehicle Systems And/Or Personnel Safety	Crit Cat
	Contact	Opens to de-energize PLC input	Fails Open	Relay MWBS will be de-energized. Loss of power to Main Hoist west blower motor and relay MWBR. MWBR contact will de-energize PLC input. PLC will set error bit. Error will cause hoist to decelerate to stop and brakes to set.	No effect.	3
			Fails Closed	Relay MWBS will not de-energize when excessive current is running through hoist west blower motor. MWFU1-3 will protect circuitry from overload. Motor overtemp sensors will detect if hoist motor overheats. Requires previous failure to cause overload.	No effect.	3
MWBR	Main West Blower Relay	Energizes when main Hoist west blower is powered	Fails De-energized	MWBR contact will open, de-energizing PLC input. PLC will set error bit. PLC will decelerate Hoist to stop and set brakes.	No effect.	3
			Fails Energized	Loss of power to Main Hoist west blower. Hoist drive will continue to operate. Motor overtemp sensors will detect if Hoist motor overheats. Requires previous failure to cause loss of power.	No effect.	3
	Contact	Opens to de-energize PLC input	Fails Open	PLC input will be de-energized. PLC will set error bit. PLC will decelerate Hoist to stop and set brakes.	No effect.	3

Table 18. **Electrical FMEA - Main Hoist Primary Mode**

System/Subsystem: 325 Ton Bridge Cranes at the Vehicle Assembly Building High Bays 1/2/3/4 / Main Hoist
PMN: H72-1200-01, -02
Drawing No.: EB-2508
Reference Figure: None

Find No. Part No.	Part Name	Part Function	a. Failure Mode b. Cause c. FMN d. Detection Method e. Correcting Action f. Time to Effect g. Timeframe	Failure Effect On System Performance	Failure Effect On Vehicle Systems And/Or Personnel Safety	Crit Cat
			Fails Closed	PLC input will not be de-energized when relay MWBR de-energizes. Hoist drive will continue to operate. Motor overtemp sensors will detect if Hoist motor overheats. Requires previous failure to cause loss of power to blower motor.	No effect.	3
None	Main Hoist West Blower Motor	Provide cooling airflow for Main Hoist West Motor	Fails Open	Loss of cooling air through Hoist Motor. Motor overtemp sensors will disable Hoist drive if Hoist motor overheats.	No effect.	3
			Fails Shorted	Current overload will either trip blower overload switch or blow MWFU1-3. Blower overload trip will de-energize relay MWBR, removing power from blower. Phase voltage monitor will detect voltage loss and de-energize PLC input. PLC will set error bit. PLC will decelerate Hoist to a stop and set brakes.	No effect.	3
None	Resistor	Provides voltage input for Fault Sense Assembly	Fails Open	Voltage imbalance will be detected by MWFSA. MWFSA will disable drive and set brakes. Delta Tau motion control board servoing will ensure motor operates at commanded speed.	No effect.	3
			Fails Short	Voltage imbalance will be detected by MWFSA. MWFSA will disable drive and set brakes. Delta Tau motion control board servoing will ensure motor operates at commanded speed.	No effect.	3

Table 18. **Electrical FMEA - Main Hoist Primary Mode**

System/Subsystem: 325 Ton Bridge Cranes at the Vehicle Assembly Building High Bays 1/2/3/4 / Main Hoist
PMN: H72-1200-01, -02
Drawing No.: EB-2508
Reference Figure: None

Find No. Part No.	Part Name	Part Function	a. Failure Mode b. Cause c. FMN d. Detection Method e. Correcting Action f. Time to Effect g. Timeframe	Failure Effect On System Performance	Failure Effect On Vehicle Systems And/Or Personnel Safety	Crit Cat
MWL1, MWL2, MWL3, MWL4, MWL5, MWL6	Inductor	Provides inductive load for Motor Control Module power input.	Fails Open	Voltage imbalance will be detected by MWFSA. MWFSA will disable drive and set brakes. Delta Tau motion control board servoing will ensure motor operates at commanded speed.	No effect.	3
			Fails Short	Voltage imbalance will be detected by MWFSA. MWFSA will disable drive and set brakes. Delta Tau motion control board servoing will ensure motor operates at commanded speed.	No effect.	3
None	Tachometer	Generates voltage proportional to rotational speed of west main hoist motor.	Fails Low or No Output	Loss of overspeed protection from MWMCM. PLC will detect mismatch between encoder and tachometer feedback. PLC will disable drive and set brakes.	No effect.	3
			Fails High Output	MWMCM will fault on overspeed, disabling drive. PLC will detect drive not enabled and set brakes, or PLC will detect mismatch between encoder and tachometer feedback. PLC will disable drive and set brakes.	No effect.	3
MTR1	Resistor	Provide tachometer voltage scaling for PLC input	Fails Open	Loss of tachometer feedback to PLC. PLC will detect mismatch between encoder and tachometer feedback. PLC will disable drive and set brakes.	No effect.	3

Table 18. **Electrical FMEA - Main Hoist Primary Mode**

System/Subsystem: 325 Ton Bridge Cranes at the Vehicle Assembly Building High Bays 1/2/3/4 / Main Hoist
PMN: H72-1200-01, -02
Drawing No.: EB-2508
Reference Figure: None

Find No. Part No.	Part Name	Part Function	a. Failure Mode b. Cause c. FMN d. Detection Method e. Correcting Action f. Time to Effect g. Timeframe	Failure Effect On System Performance	Failure Effect On Vehicle Systems And/Or Personnel Safety	Crit Cat
			Fails Shorted	Tachometer feedback will not be scaled down for PLC input. PLC will detect mismatch between encoder and tachometer feedback. PLC will disable drive and set brakes.	No effect.	3
MTR2	Resistor	Provides tachometer voltage scaling for PLC input	Fails Open	Tachometer feedback will not be scaled down for PLC input. PLC will detect mismatch between encoder and tachometer feedback. PLC will disable drive and set brakes.	No effect.	3
			Fails Shorted	Loss of tachometer feedback to PLC. PLC will detect mismatch between encoder and tachometer feedback. PLC will disable drive and set brakes.	No effect.	3
I:2,7,I6	PLC Input	Provides interface for tachometer feedback voltage into PLC	Fails Low or No Input	Loss of tachometer feedback to PLC. PLC will detect mismatch between encoder and tachometer feedback. PLC will disable drive and set brakes.	No effect.	3
			Fails High Input	PLC will detect mismatch between encoder and tachometer feedback. PLC will disable drive and set brakes.	No effect.	3
MWMCM	Main Hoist West Motor Control Module	Provides primary armature and field control of west Main Hoist Motor				

Table 18. **Electrical FMEA - Main Hoist Primary Mode**

System/Subsystem: 325 Ton Bridge Cranes at the Vehicle Assembly Building High Bays 1/2/3/4 / Main Hoist
PMN: H72-1200-01, -02
Drawing No.: EB-2508
Reference Figure: None

Find No. Part No.	Part Name	Part Function	a. Failure Mode b. Cause c. FMN d. Detection Method e. Correcting Action f. Time to Effect g. Timeframe	Failure Effect On System Performance	Failure Effect On Vehicle Systems And/Or Personnel Safety	Crit Cat
	Armature Current Outputs A1, A2	Provides current for Hoist Motor armature windings	Fails Low or No Output	Delta Tau motion controller will increase current reference to operate Hoist at commanded speed. Delta Tau motion controller will detect following error if motor speed does not match speed commanded. PLC will detect current imbalance, shut down Hoist drives and set brakes.	No effect.	3
			Fails High Output	Delta Tau Motion Controller will increase current reference to operate Hoist at commanded speed. Delta Tau Motion Controller will detect following error if motor speed does not match speed commanded. PLC will detect current imbalance, shut down hoist drives and set brakes.	No effect.	3
	Field Current Outputs F1, F2	Provides current for hoist motor field windings	Fails Low or No Output	PLC will detect loss of field current, shut down hoist and set brakes. Motor control module will also detect loss of field current and shut down. PLC will detect motor control module not ready and set brakes. Delta Tau motion control board will attempt to servo hoist motors to commanded speed. If motors do not reach or maintain commanded speed, Delta Tau motion control board will detect following error. Drive will be disabled and brakes will set.	No effect.	3

Table 18. **Electrical FMEA - Main Hoist Primary Mode**

System/Subsystem: 325 Ton Bridge Cranes at the Vehicle Assembly Building High Bays 1/2/3/4 / Main Hoist
PMN: H72-1200-01, -02
Drawing No.: EB-2508
Reference Figure: None

Find No. Part No.	Part Name	Part Function	a. Failure Mode b. Cause c. FMN d. Detection Method e. Correcting Action f. Time to Effect g. Timeframe	Failure Effect On System Performance	Failure Effect On Vehicle Systems And/Or Personnel Safety	Crit Cat
			Fails High Output	Delta Tau motion control board will attempt to servo hoist motors to commanded speed. If motors do not reach or maintain commanded speed, Delta Tau motion control board will detect following error. Drive will be disabled and brakes will set. High field current will cause motor to overheat. PLC will detect overheat condition and disable hoist and set brakes.	No effect.	3
MWCA	Main Hoist West Cable Adapter	Provides interface between PLC and MWMCM, and field current feedback to MWMCM				
	15, Armature Current Feedback	Provides current feedback to PLC input	Fails No Output	Torque will not be proved. PLC will not allow hoist to operate. If failure occurs while hoist is operating, PLC will detect load imbalance, disable hoist and set brakes. Delta Tau Motion Controller will also detect loss of armature current feedback, disable hoist and set brakes.	No effect.	3

Table 18. **Electrical FMEA - Main Hoist Primary Mode**

System/Subsystem: 325 Ton Bridge Cranes at the Vehicle Assembly Building High Bays 1/2/3/4 / Main Hoist
PMN: H72-1200-01, -02
Drawing No.: EB-2508
Reference Figure: None

Find No. Part No.	Part Name	Part Function	a. Failure Mode b. Cause c. FMN d. Detection Method e. Correcting Action f. Time to Effect g. Timeframe	Failure Effect On System Performance	Failure Effect On Vehicle Systems And/Or Personnel Safety	Crit Cat
	19, Field Current Feedback	Provides field current feedback to PLC input	Fails No Output	PLC will detect loss of field current, shut down hoist and set brakes. Delta Tau motion control board will attempt to servo hoist motors to commanded speed. If motors do not reach or maintain commanded speed, Delta Tau motion control board will detect following error. Drive will be disabled and brakes set.	No effect.	3
	5, Field Current Reference Signal	Provides interface for Field Current command from PLC to MWMCM	Fails No Output	PLC will detect loss of field current, shut down hoist and set brakes. Motor control module will also detect loss of field current and shut down. PLC will detect motor control module not ready and set brakes. Delta Tau motion control board will attempt to servo hoist motors to commanded speed. If motors do no reach or maintain commanded speed, Delta Tau motion control board will detect following error. Drive will be disabled and brakes will set.	No effect.	3
MWFB	Main Hoist West Field Board	Measures current in west motor field loop and sends feedback signal to MWMCM firing board				

Table 18. **Electrical FMEA - Main Hoist Primary Mode**

System/Subsystem: 325 Ton Bridge Cranes at the Vehicle Assembly Building High Bays 1/2/3/4 / Main Hoist
PMN: H72-1200-01, -02
Drawing No.: EB-2508
Reference Figure: None

Find No. Part No.	Part Name	Part Function	a. Failure Mode b. Cause c. FMN d. Detection Method e. Correcting Action f. Time to Effect g. Timeframe	Failure Effect On System Performance	Failure Effect On Vehicle Systems And/Or Personnel Safety	Crit Cat
	4, Field Current Feedback	Provides current feedback to MWMCM	Fails Low or No Output	Motor control module will increase field current to compensate for low feedback. Imbalance between west and East motors will cause an armature imbalance, shut down drives and set brakes or PLC will detect loss of field current, shut down hoist and set brakes. Delta Tau motion control board will attempt to servo hoist motors to commanded speed. If motors do not reach or maintain commanded speed, Delta Tau motion control board will detect following error. Drive will be disabled and brakes will set.	No effect.	3
			Fails High Output	Motor control module will reduce field current to compensate. PLC will detect loss of field current, shut down hoist and set brakes. Delta Tau motion control board will attempt to servo hoist motors to commanded speed. If motors do not reach or maintain commanded speed, Delta Tau motion control board will detect following error. Drive will be disabled and brakes will set.	No effect.	3

Table 18. **Electrical FMEA - Main Hoist Primary Mode**

System/Subsystem: 325 Ton Bridge Cranes at the Vehicle Assembly Building High Bays 1/2/3/4 / Main Hoist
PMN: H72-1200-01, -02
Drawing No.: EB-2508
Reference Figure: None

Find No. Part No.	Part Name	Part Function	a. Failure Mode b. Cause c. FMN d. Detection Method e. Correcting Action f. Time to Effect g. Timeframe	Failure Effect On System Performance	Failure Effect On Vehicle Systems And/Or Personnel Safety	Crit Cat
O:0,8,13	PLC Output	Provides field current reference signal to MWCA	Fails Low or No Output	PLC will detect loss of field current, shut down hoist and set brakes. Delta Tau motion control board will attempt to servo hoist motors to commanded speed. If motors do not reach or maintain commanded speed, Delta Tau motion control board will detect following error. Drive will be disabled and brakes will set.	No effect.	3
			Fails High Output	Delta Tau motion control board will attempt to servo hoist motors to commanded speed. If motors do not reach or maintain commanded speed, Delta Tau motion control board will detect following error. Drive will be disabled and brakes will set. High field current will cause motor to overheat. PLC will detect overheat condition and disable hoist and set brakes.	No effect.	3
None	Resistor 20 K ohms	Prevent PLC input from “floating” when an input is not being provided by MWCA	Fails Open	PLC will detect load imbalance if floating data value was latched into PLC input.	No effect.	3
			Fails Shorted	PLC input will be shorted to ground reference. PLC will detect load imbalance between East and west motors. Torque will not be proved.	No effect.	3

Table 18. **Electrical FMEA - Main Hoist Primary Mode**

System/Subsystem: 325 Ton Bridge Cranes at the Vehicle Assembly Building High Bays 1/2/3/4 / Main Hoist
PMN: H72-1200-01, -02
Drawing No.: EB-2508
Reference Figure: None

Find No. Part No.	Part Name	Part Function	a. Failure Mode b. Cause c. FMN d. Detection Method e. Correcting Action f. Time to Effect g. Timeframe	Failure Effect On System Performance	Failure Effect On Vehicle Systems And/Or Personnel Safety	Crit Cat
I:0,6,12	PLC Input	Provides armature current feedback to PLC	Fails Low or No Input	Torque will not be proved. PLC will not allow hoist to operate. If failure occurs while hoist is operating, PLC will detect load imbalance, disable hoist and set brakes. Delta Tau motion controller will also detect loss of armature current feedback, disable hoist and set brakes.	No effect.	3
			Fails High Input	PLC will detect load imbalance, disable hoist and set brakes. Delta Tau motion controller will also detect loss of armature current feedback, disable hoist and set brakes. Delta Tau motion control board will attempt to servo hoist motors to commanded speed. If motors do not reach or maintain commanded speed, Delta Tau motion control board will detect following error. Drive will be disabled and brakes will set.	No effect.	3
None	Resistor 20 K Ohms	Prevent PLC input from “floating” when an input is not being provided by MWCA.	Fails open	No effect. PLC will be able to check for field loss when operating.	No effect.	3
			Fails Shorted	PLC input will be shorted to ground reference. PLC will detect loss of field current, shut down drive and set brakes.	No effect.	3
I:0,6,14	PLC Input	Provides field current feedback to PLC	Fails Low or No Input	PLC will detect loss of field current, shut down drives and set brakes.	No effect.	3

Table 18. **Electrical FMEA - Main Hoist Primary Mode**

System/Subsystem: 325 Ton Bridge Cranes at the Vehicle Assembly Building High Bays 1/2/3/4 / Main Hoist
PMN: H72-1200-01, -02
Drawing No.: EB-2508
Reference Figure: None

Find No. Part No.	Part Name	Part Function	a. Failure Mode b. Cause c. FMN d. Detection Method e. Correcting Action f. Time to Effect g. Timeframe	Failure Effect On System Performance	Failure Effect On Vehicle Systems And/Or Personnel Safety	Crit Cat
			Fails High Input	PLC would not detect field loss if it occurred. Motor control module will detect loss of field current and disable. PLC will detect drive not ready and set brakes. Delta Tau motion control board will attempt to servo hoist motors to commanded speed. If motors do not reach or maintain commanded speed, Delta Tau motion control board will detect following error. Drive will be disabled and brakes will set.	No effect.	3
MWR4	Resistor	Part of RC snubber on DC armature loop	Fails Open	Will cause “cogging” of motor. PLC will detect encoder imbalance and shut down drives and set brakes. Higher peak armature currents will cause motor to overheat. PLC will detect overheat conditions, shut down drive and set brakes.	No effect.	3
			Fails Shorted	Motor control module will fault on instantaneous overcurrent. PLC will detect drive not ready and set brakes. PLC will detect armature current imbalance, shut down drive and set brakes.	No effect.	3
MWC2	Capacitor	Part or RC snubber on DC armature loop	Fails Open	Will cause “cogging” of motor. PLC will detect encoder imbalance and shut down drives and set brakes. Higher peak armature currents will cause motor to overheat. PLC will detect overheat condition, shut down drive and set brakes.	No effect.	3

Table 18. **Electrical FMEA - Main Hoist Primary Mode**

System/Subsystem: 325 Ton Bridge Cranes at the Vehicle Assembly Building High Bays 1/2/3/4 / Main Hoist
PMN: H72-1200-01, -02
Drawing No.: EB-2508
Reference Figure: None

Find No. Part No.	Part Name	Part Function	a. Failure Mode b. Cause c. FMN d. Detection Method e. Correcting Action f. Time to Effect g. Timeframe	Failure Effect On System Performance	Failure Effect On Vehicle Systems And/Or Personnel Safety	Crit Cat
			Fails Shorted	Motor control module will fault on instantaneous overcurrent. PLC will detect drive not ready and set brakes. PLC will detect armature current imbalance, shut down drives and set brakes.	No effect.	3
MWOL	Overload Switch	Contact opens when excessive current is detected in motor armature loop	Prematurely operates	PLC input will de-energize. PLC will disable drive and set brake.	No effect.	3
			Fails to Operate	Excessive current can flow through associated motor. Motor will overheat. Motor overheat sensors will detect condition and disable drive. Delta Tau will continue to servo motor to commanded speed. If speed does not match speed commanded, Delta Tau will disable drive and set brakes.	No effect.	3
	Contact, normally closed	De-energizes PLC input when overload switch detects excessive current in motor armature loop	Fails Open	PLC input will remain de-energized. PLC will disable drive and set brakes.	No effect.	3

Table 18. **Electrical FMEA - Main Hoist Primary Mode**

System/Subsystem: 325 Ton Bridge Cranes at the Vehicle Assembly Building High Bays 1/2/3/4 / Main Hoist
PMN: H72-1200-01, -02
Drawing No.: EB-2508
Reference Figure: None

Find No. Part No.	Part Name	Part Function	a. Failure Mode b. Cause c. FMN d. Detection Method e. Correcting Action f. Time to Effect g. Timeframe	Failure Effect On System Performance	Failure Effect On Vehicle Systems And/Or Personnel Safety	Crit Cat
			Fails Closed	Excessive current can flow through associated motor. Motor will overheat. Motor overheat sensors will detect condition and disable drive. Delta Tau will continue to servo motor to commanded speed. If speed does not match speed commanded, Delta Tau will disable drive and set brakes.	No effect.	3
None	Ammeter	Indicates amount of current flowing in motor armature loop	Fails Open	Cab ammeter will indicate zero current for one hoist motor. Hoist will operate normally.	No effect.	3
			Fails Shorted	Excessive current will flow through ammeter windings resulting in windings burning open. See above.	No effect.	3
MWSF1 MWSF2	Fuse 1A	Provides overload protection for main hoist west motor control modules armature circuit	Premature Operation	Cab ammeter will indicate zero current for main hoist west motor. Hoist will operate normally.	No effect.	3
			Fails to Operate	Excessive current will flow through ammeter windings resulting in windings burning open. Excessive current can flow through motor. Motor will over-heat. Motor overheat sensors will detect condition and disable drive. Delta Tau will allow motor to continue at commanded speed. If speed does not match speed commanded, Delta Tau will disable drive and set brakes.	No effect.	3

Table 18. **Electrical FMEA - Main Hoist Primary Mode**

System/Subsystem: 325 Ton Bridge Cranes at the Vehicle Assembly Building High Bays 1/2/3/4 / Main Hoist
PMN: H72-1200-01, -02
Drawing No.: EB-2508
Reference Figure: None

Find No. Part No.	Part Name	Part Function	a. Failure Mode b. Cause c. FMN d. Detection Method e. Correcting Action f. Time to Effect g. Timeframe	Failure Effect On System Performance	Failure Effect On Vehicle Systems And/Or Personnel Safety	Crit Cat
None	Main Hoist Motor, West	Provide torque to mechanical drive system to move load				
	Armature Windings	Provides torque to rotate motor output shaft	Fails Open	Loss of current path for one hoist motor. PLC will detect load imbalance and shut down drives and set brakes. Delta Tau motion controller will also detect loss of armature current feedback and signal PLC to shut down drives and set brakes. Delta Tau will continue to servo motor to commanded speed. If speed does not match speed commanded, Delta Tau will disable drive and set brakes.	No effect.	3
			Fails Shorted	Excessive current will flow through shorted motor. MWMCM will detect instantaneous overcurrent, disabling drive and setting brakes. Excessive current will trip overload switch, disabling drive, or Delta Tau motion control board will detect following error.	No effect.	3
	Field Winding	Provides static magnetic field for armature magnetic field to work against.	Fails Open	PLC will detect field loss and shut down drive and set brakes. Motor control module will detect field loss and drop out ready relays, disabling drives and setting brakes.	No effect.	3

Table 18. **Electrical FMEA - Main Hoist Primary Mode**

System/Subsystem: 325 Ton Bridge Cranes at the Vehicle Assembly Building High Bays 1/2/3/4 / Main Hoist
PMN: H72-1200-01, -02
Drawing No.: EB-2508
Reference Figure: None

Find No. Part No.	Part Name	Part Function	a. Failure Mode b. Cause c. FMN d. Detection Method e. Correcting Action f. Time to Effect g. Timeframe	Failure Effect On System Performance	Failure Effect On Vehicle Systems And/Or Personnel Safety	Crit Cat
			Fails Shorted	Excessive current will flow through remaining field winding creating a torque imbalance between the two motors. PLC will detect load imbalance and disable drives and set brakes. Delta Tau will continue to servo motor to commanded speed. If speed does not match speed commanded, Delta Tau will disable drive and set brakes.	No effect.	3
MECB	Circuit Breaker	Protects circuitry from overloads in main hoist East drive circuit	Prematurely Operates	Loss of power to main hoist East motor control module. Phase monitor relay will drop out ready relays, disabling drive. PLC will detect drive not enabled and set brakes.	No effect.	3
			Fails to Operate	Upstream 500A main circuit Breaker will trip. Loss of power to crane. All brakes will set. Requires previous failure to cause overload.	No effect.	3
MEIT	Isolation Transformer	Isolates Main Hoist East Drive circuit to reduce electrical noise and interference	Fails Open	Loss of one or more power phases. Phase monitor relay will drop out ready relays, disabling drive. PLC will detect drive not enabled and set brakes.	No effect.	3
			Fails Shorted	Overload will trip MECB. Phase monitor relay will drop out ready relays, disabling drive. PLC will detect drive not enabled and set brakes.	No effect.	3

Table 18. **Electrical FMEA - Main Hoist Primary Mode**

System/Subsystem: 325 Ton Bridge Cranes at the Vehicle Assembly Building High Bays 1/2/3/4 / Main Hoist
PMN: H72-1200-01, -02
Drawing No.: EB-2508
Reference Figure: None

Find No. Part No.	Part Name	Part Function	a. Failure Mode b. Cause c. FMN d. Detection Method e. Correcting Action f. Time to Effect g. Timeframe	Failure Effect On System Performance	Failure Effect On Vehicle Systems And/Or Personnel Safety	Crit Cat
None	Surge Suppresser	Protects circuitry from power surges	Prematurely Operates	Nuisance tripping of circuit Breaker BNCB.	No effect.	3
			Fails to Operate	Loss of power surge protection for downstream circuitry.	No effect.	3
ED-2412 None	Capacitor network	Eliminates power system ringing on input of field power module	Fails open	Power system ringing will be inputted to field power module. Possible damage to field power module.	No effect.	3
			Fails shorted	Field power module 20 amp fuses will blow. Following error will be detected by PLC and set brakes	No effect.	3
MEFU1, MEFU2, MEFU3	Fuse	Protects circuitry from overloads in Main Hoist East Motor Blower circuit	Prematurely Operates	Loss of one or more power phases. Phase monitor relay will drop out ready relays, disabling drive. PLC will detect drive not enabled and set brakes.	No effect.	3
			Fails to Operate	Associated fuse in current loop will protect against overloads. Phase monitor relay will drop out ready relays, disabling drive. PLC will detect drive not enabled and set brakes. Requires previous failure to cause overload.	No effect.	3
MEPM	Main East Phase Monitor Relay	Monitors 3 phase power for proper phase relationships	Fails De-energized	Contact will not close to energize relays MERDY and MEFRDY. East drive will be disabled. PLC will detect drive not enabled and set brakes.	No effect.	3

Table 18. **Electrical FMEA - Main Hoist Primary Mode**

System/Subsystem: 325 Ton Bridge Cranes at the Vehicle Assembly Building High Bays 1/2/3/4 / Main Hoist
PMN: H72-1200-01, -02
Drawing No.: EB-2508
Reference Figure: None

Find No. Part No.	Part Name	Part Function	a. Failure Mode b. Cause c. FMN d. Detection Method e. Correcting Action f. Time to Effect g. Timeframe	Failure Effect On System Performance	Failure Effect On Vehicle Systems And/Or Personnel Safety	Crit Cat
			Fails Energized	Phase change or voltage imbalance will be detected by MEFSA. MEFSA will disable west drive. PLC will detect drive not enabled and set brakes. Requires previous failure to cause improper phase or voltage.	No effect.	3
	Contact	Opens to De-energize relays MERDY, MEFRDY if improper phase relationship is detected	Fails Open	Relays MERDY and MEFRDY will not be energized. East drive will be disabled. PLC will detect drive not enabled and set brakes.	No effect.	3
			Fails Closed	Phase change or voltage imbalance will be detected by MEFSA. MEFSA will disable East drive. PLC will detect drive not enabled and set brakes. Requires previous failure to cause improper phase or voltage.	No effect.	3
MEBOL	Overload Switch	Switch contact opens when excessive current is detected in Main Hoist East motor blower circuit	Prematurely Operates	MEBOL contact will open, de-energizing relay MEBS. Loss of power to Main Hoist East blower motor and relay MEBR. MEBR contact will de-energize PLC input. PLC will set error bit. Error will cause Hoist to decelerate to stop and brakes to set.	No effect.	3
			Fails to Operate	MEFU1-3 will protect against overload. Hoist drive will continue to operate. Motor overtemp sensors will detect if hoist motor overheats. Requires previous failure to cause overload.	No effect.	3

Table 18. **Electrical FMEA - Main Hoist Primary Mode**

System/Subsystem: 325 Ton Bridge Cranes at the Vehicle Assembly Building High Bays 1/2/3/4 / Main Hoist
PMN: H72-1200-01, -02
Drawing No.: EB-2508
Reference Figure: None

Find No. Part No.	Part Name	Part Function	a. Failure Mode b. Cause c. FMN d. Detection Method e. Correcting Action f. Time to Effect g. Timeframe	Failure Effect On System Performance	Failure Effect On Vehicle Systems And/Or Personnel Safety	Crit Cat
	Contact	Opens to de-energize PLC input	Fails Open	Relay MEBS will be de-energized. Loss of power to main hoist East blower motor and relay MEBR. MEBR contact will de-energize PLC input. PLC will set error bit. Error will cause Hoist to decelerate to stop and brakes to set.	No effect.	3
			Fails Closed	Relay MEBS will not de-energize when excessive current is running through Hoist East motor blower. MEFU1-3 will protect circuitry from overload. Motor overtemp sensors will detect if hoist motor overheats. Requires previous failure to cause overload.	No effect.	3
MEBR	Main East Blower Relay	Energizes when Main Hoist west blower is powered	Fails De-energized	MEBR contact will open, de-energizing PLC input. PLC will set error bit. PLC will decelerate hoist to stop and set brakes.	No effect.	3
			Fails Energized	Loss of power to Main Hoist East blower will not be detected. Hoist drive will continue to operate. Motor overtemp sensors will detect if hoist motor overheats. Requires previous failure to cause loss of power.	No effect.	3
	Contact	Opens to de-energize PLC input	Fails Open	PLC input will be de-energized. PLC will set error bit. PLC will decelerate hoist to stop and set brakes.	No effect.	3

Table 18. **Electrical FMEA - Main Hoist Primary Mode**

System/Subsystem: 325 Ton Bridge Cranes at the Vehicle Assembly Building High Bays 1/2/3/4 / Main Hoist
PMN: H72-1200-01, -02
Drawing No.: EB-2508
Reference Figure: None

Find No. Part No.	Part Name	Part Function	a. Failure Mode b. Cause c. FMN d. Detection Method e. Correcting Action f. Time to Effect g. Timeframe	Failure Effect On System Performance	Failure Effect On Vehicle Systems And/Or Personnel Safety	Crit Cat
			Fails Closed	PLC input will not be de-energized when relay MEBR de-energizes. Hoist drive will continue to operate. Motor overtemp sensors will detect if hoist motor overheats. Requires previous failure to cause loss of power to blower motor.	No effect.	3
None	Main Hoist East Blower Motor	Provide cooling airflow for Main hoist west motor	Fails Open	Loss of cooling air through Hoist motor. Motor overtemp sensors will disable hoist drive if hoist motor overheats.	No effect.	3
			Fails Shorted	Current overload will either trip blower overload switch or blow MEFU1-3. Blower overload trip will de-energize relay MEBR, removing power from blower. Phase voltage monitor will detect voltage loss and de-energize PLC input. PLC will set error bit. PLC will decelerate hoist to a stop and set brakes.	No effect.	3
None	Resistor	Provides voltage input for Fault Sense Assembly	Fails Open	Voltage imbalance will be detected by MEFSA. MEFSA will disable drive and set brakes. Delta Tau motion control board servoing will ensure motor operates at commanded speed.	No effect.	3
			Fails Short	Voltage imbalance will be detected by MEFSA. MEFSA will disable drive and set brakes. Delta Tau motion control board servoing will ensure motor operates at commanded speed.	No effect.	3

Table 18. **Electrical FMEA - Main Hoist Primary Mode**

System/Subsystem: 325 Ton Bridge Cranes at the Vehicle Assembly Building High Bays 1/2/3/4 / Main Hoist
PMN: H72-1200-01, -02
Drawing No.: EB-2508
Reference Figure: None

Find No. Part No.	Part Name	Part Function	a. Failure Mode b. Cause c. FMN d. Detection Method e. Correcting Action f. Time to Effect g. Timeframe	Failure Effect On System Performance	Failure Effect On Vehicle Systems And/Or Personnel Safety	Crit Cat
MEL1, MEL2, MEL3, MEL4, MEL5, MEL6	Inductor	Provides inductive load for motor control module power input	Fails Open	Voltage imbalance will be detected by MEFSA. MEFSA will disable drive and set brakes. Delta Tau motion control board servoing will ensure motor operates at commanded speed.	No effect.	3
			Fails Short	Voltage imbalance will be detected by MEFSA. MEFSA will disable drive and set brakes. Delta Tau motion control board servoing will ensure motor operates at commanded speed.	No effect.	3
None	Tachometer	Generates voltage proportional to rotational speed of East main hoist motor	Fails Low or No Output	Loss of MEMCM overspeed protection. PLC will provide overspeed protection.	No effect.	3
			Fails High Output	MEMCM will trip off for overspeed condition that does not exist.	No effect.	3
MEMCM	Main Hoist East Motor Control Module	Provides primary armature and field control of East Main hoist motor				

Table 18. **Electrical FMEA - Main Hoist Primary Mode**

System/Subsystem: 325 Ton Bridge Cranes at the Vehicle Assembly Building High Bays 1/2/3/4 / Main Hoist
PMN: H72-1200-01, -02
Drawing No.: EB-2508
Reference Figure: None

Find No. Part No.	Part Name	Part Function	a. Failure Mode b. Cause c. FMN d. Detection Method e. Correcting Action f. Time to Effect g. Timeframe	Failure Effect On System Performance	Failure Effect On Vehicle Systems And/Or Personnel Safety	Crit Cat
	Armature Current Outputs A1, A2	Provides current for Hoist motor armature windings	Fails Low or No Output	Delta Tau motion controller will increase current reference to operate hoist at commanded speed. Delta Tau motion controller will detect following error if motor speed does not match speed commanded. PLC will detect current imbalance, shut down hoist drives and set brakes.	No effect.	3
			Fails High Output	Delta Tau motion controller will increase current reference to operate hoist at commanded speed. Delta Tau motion controller will detect following error if motor speed does not match speed commanded. PLC will detect current imbalance, shut down hoist drives and set brakes.	No effect.	3
	Field Current Outputs F1, F2	Provides current for Hoist motor field windings	Fails Low or No Output	PLC will detect loss of field current, shut down hoist and set brakes. Motor control module will also detect loss of field current and shut down. PLC will detect motor control module not ready and set brakes. Delta Tau motion control board will attempt to servo hoist motors to commanded speed. If motors do not reach or maintain commanded speed, Delta Tau motion control board will detect following error, drive will be disabled and brakes will set.	No effect.	3

Table 18. **Electrical FMEA - Main Hoist Primary Mode**

System/Subsystem: 325 Ton Bridge Cranes at the Vehicle Assembly Building High Bays 1/2/3/4 / Main Hoist
PMN: H72-1200-01, -02
Drawing No.: EB-2508
Reference Figure: None

Find No. Part No.	Part Name	Part Function	a. Failure Mode b. Cause c. FMN d. Detection Method e. Correcting Action f. Time to Effect g. Timeframe	Failure Effect On System Performance	Failure Effect On Vehicle Systems And/Or Personnel Safety	Crit Cat
			Fails High Output	Delta Tau motion control board will attempt to servo hoist motors to commanded speed. If motors do not reach or maintain commanded speed, Delta Tau motion control board will detect following error, drive will be disabled and brakes will set. High field current will cause motor to overheat. PLC will detect overheat condition and disable hoist and set brakes.	No effect.	3
MECA	Main Hoist East Cable Adapter	Provides interface between PLC and MEMCM and Field Current Feedback to MEMCM				
	15, Armature Current Feedback	Provides current feedback to PLC input	Fails No Output	Torque will not be proved. PLC will not allow hoist to operate. If failure occurs while hoist is operating, PLC will detect load imbalance, disable hoist and set brakes. Delta Tau motion controller will also detect loss of armature current feedback, disable hoist and set brakes.	No effect.	3

Table 18. **Electrical FMEA - Main Hoist Primary Mode**

System/Subsystem: 325 Ton Bridge Cranes at the Vehicle Assembly Building High Bays 1/2/3/4 / Main Hoist
PMN: H72-1200-01, -02
Drawing No.: EB-2508
Reference Figure: None

Find No. Part No.	Part Name	Part Function	a. Failure Mode b. Cause c. FMN d. Detection Method e. Correcting Action f. Time to Effect g. Timeframe	Failure Effect On System Performance	Failure Effect On Vehicle Systems And/Or Personnel Safety	Crit Cat
	19, Field Current Feedback	Provides field current feedback to PLC input	Fails No Output	PLC will detect loss of field current, shut down hoist and set brakes. Delta Tau motion control board will attempt to servo hoist motors to commanded speed. If motors do not reach or maintain commanded speed, Delta Tau motion control board will detect following error, drive will be disabled and brakes will set.	No effect.	3
	5, Field Current Reference	Provides interface for Field Current command from PLC to MEMCM	Fails No Output	PLC will detect loss of field current, shut down hoist and set brakes. Motor control module will also detect loss of field current and shut down. PLC will detect motor control module not ready and set brakes. Delta Tau motion control board will attempt to servo hoist motors to commanded speed. If motors do not reach or maintain commanded speed, Delta Tau motion control board will detect following error, drive will be disabled and brakes will set.	No effect.	3
MEFB	Main Hoist East Field Board	Measures current in East Motor Field loop and sends feedback signal to MEMCM firing board				

Table 18. **Electrical FMEA - Main Hoist Primary Mode**

System/Subsystem: 325 Ton Bridge Cranes at the Vehicle Assembly Building High Bays 1/2/3/4 / Main Hoist
PMN: H72-1200-01, -02
Drawing No.: EB-2508
Reference Figure: None

Find No. Part No.	Part Name	Part Function	a. Failure Mode b. Cause c. FMN d. Detection Method e. Correcting Action f. Time to Effect g. Timeframe	Failure Effect On System Performance	Failure Effect On Vehicle Systems And/Or Personnel Safety	Crit Cat
	4, Field Current Feedback	Provides current feedback to MEMCM	Fails Low or No Output	Motor control module will increase field current to compensate for low feedback. Imbalance between west and East motors will cause an armature imbalance. PLC will detect imbalance, shut down drives and set brakes or PLC will detect loss of field current, shut down hoist and set brakes. Delta Tau motion control board will attempt to servo hoist motors to commanded speed. If motors do not reach or maintain commanded speed, Delta Tau motion control board will detect following error, drive will be disabled and brakes will set.	No effect.	3
			Fails High Output	Motor control module will reduce field current to compensate. PLC will detect loss of field current, shut down hoist and set brakes. Delta Tau motion control board will attempt to servo hoist motors to commanded speed. If motors do not reach or maintain commanded speed, Delta Tau motion control board will detect following error, drive will be disabled and brakes will set.	No effect.	3

Table 18. **Electrical FMEA - Main Hoist Primary Mode**

System/Subsystem: 325 Ton Bridge Cranes at the Vehicle Assembly Building High Bays 1/2/3/4 / Main Hoist
PMN: H72-1200-01, -02
Drawing No.: EB-2508
Reference Figure: None

Find No. Part No.	Part Name	Part Function	a. Failure Mode b. Cause c. FMN d. Detection Method e. Correcting Action f. Time to Effect g. Timeframe	Failure Effect On System Performance	Failure Effect On Vehicle Systems And/Or Personnel Safety	Crit Cat
O:0,8,14	PLC Output	Provides field current reference signal to MECA	Fails Low or No Output	PLC will detect loss of field current, shut down hoist and set brakes. Delta Tau motion control board will attempt to servo hoist motors to commanded speed. If motors do not reach or maintain commanded speed, Delta Tau motion control board will detect following error, drive will be disabled and brakes will set.	No effect.	3
			Fails High Output	Delta Tau motion control board will attempt to servo hoist motors to commanded speed. If motors do not reach or maintain commanded speed, Delta Tau motion control board will detect following error, drive will be disabled and brakes will set. High field current will cause motor to overheat. PLC will detect overheat condition and disable hoist and set brakes.	No effect.	3
None	Resistor 20K Ohm	Prevent PLC input from “Floating” when an input is not being provided by MECA	Fails Open	PLC detect load imbalance if floating data values was latched into PLC input	No effect.	3
			Fails Shorted	PLC input will be shorted to ground reference. PLC will detect load imbalance between East and west motors. Torque will not be proved.	No effect.	3

Table 18. **Electrical FMEA - Main Hoist Primary Mode**

System/Subsystem: 325 Ton Bridge Cranes at the Vehicle Assembly Building High Bays 1/2/3/4 / Main Hoist
PMN: H72-1200-01, -02
Drawing No.: EB-2508
Reference Figure: None

Find No. Part No.	Part Name	Part Function	a. Failure Mode b. Cause c. FMN d. Detection Method e. Correcting Action f. Time to Effect g. Timeframe	Failure Effect On System Performance	Failure Effect On Vehicle Systems And/Or Personnel Safety	Crit Cat
I:0,6,13	PLC Input	Provides armature current feedback to PLC	Fails Low or No Input	Torque will not be proved. PLC will not allow hoist to operate. If failure occurs while hoist is operating, PLC will detect load imbalance, disable Hoist and set brakes. Delta Tau motion controller will also detect loss of armature current feedback, disable hoist and set brakes.	No effect.	3
			Fails High Input	PLC will detect load imbalance, disable hoist and set brakes. Delta Tau motion controller will also detect loss of armature current feedback, disable hoist and set brakes. Delta Tau motion control board will attempt to servo hoist motors to commanded speed. If motors do not reach or maintain commanded speed, Delta Tau motion control board will detect following error, drive will be disabled and brakes will set.	No effect.	3
None	Resistor 20K ohms	Prevent PLC input from “Floating” when an input is not being provided by MECA	Fails Open	No effect. PLC will be able to check for field loss when operating.	No effect.	3
			Fails Shorted	PLC input will be shorted to ground reference. PLC will detect loss of field current, shut down drive and set brakes.	No effect.	3
I:0,6,15	PLC Input	Provides field current feedback to PLC	Fails Low or No Input	PLC will detect loss of field current, shut down drives and set brakes.	No effect.	3

Table 18. **Electrical FMEA - Main Hoist Primary Mode**

System/Subsystem: 325 Ton Bridge Cranes at the Vehicle Assembly Building High Bays 1/2/3/4 / Main Hoist
PMN: H72-1200-01, -02
Drawing No.: EB-2508
Reference Figure: None

Find No. Part No.	Part Name	Part Function	a. Failure Mode b. Cause c. FMN d. Detection Method e. Correcting Action f. Time to Effect g. Timeframe	Failure Effect On System Performance	Failure Effect On Vehicle Systems And/Or Personnel Safety	Crit Cat
			Fails High Input	PLC would not detect field loss if it occurred. Motor control module will detect loss of field current and disable. PLC will detect drive not ready and set brakes. Delta Tau motion control board will attempt to servo hoist motors to commanded speed. If motors do not reach or maintain commanded speed, Delta Tau motion control board will detect following error, drive will be disabled and brakes will set.	No effect.	3
MER4	Resistor	Part of RC Snubber on DC armature loop	Fails Open	Will cause “cogging” of motor. PLC will detect encoder imbalance and shut down drives and set brakes. Higher peak armature currents will cause motor to overheat. PLC will detect overheat condition, shut down drive and set brakes.	No effect.	3
			Fails Shorted	Motor control module will fault on instantaneous overcurrent. PLC will detect drive not ready and set brakes. PLC will detect armature current imbalance, shut down drives and set brakes.	No effect.	3
MEC2	Capacitor	Part of RC Snubber on DC armature loop	Fails Open	Will cause “cogging” of motor. PLC will detect encoder imbalance and shut down drives and set brakes. Higher peak armature currents will cause motor to overheat. PLC will detect overheat condition, shut down drive and set brakes.	No effect.	3

Table 18. **Electrical FMEA - Main Hoist Primary Mode**

System/Subsystem: 325 Ton Bridge Cranes at the Vehicle Assembly Building High Bays 1/2/3/4 / Main Hoist
PMN: H72-1200-01, -02
Drawing No.: EB-2508
Reference Figure: None

Find No. Part No.	Part Name	Part Function	a. Failure Mode b. Cause c. FMN d. Detection Method e. Correcting Action f. Time to Effect g. Timeframe	Failure Effect On System Performance	Failure Effect On Vehicle Systems And/Or Personnel Safety	Crit Cat
			Fails Shorted	Motor control module will fault on instantaneous overcurrent. PLC will detect drive not ready and set brakes. PLC will detect armature current imbalance, shut down drives and set brakes.	No effect.	3
MEOL	Overload Switch	Contact opens when excessive current is detected in motor armature loop	Prematurely Operates	PLC input will de-energize. PLC will disable drive and set brake.	No effect.	3
			Fails to Operate	Excessive current can flow through associated motor. Motor will overheat. Motor overheat sensors will detect condition and disable drive. Delta Tau will continue to servo motor to commanded speed. If speed does not match speed commanded, Delta Tau will disable drive and set brakes.	No effect.	3
	Contact, Normally Closed	De-energizes PLC input when overload switch detects excessive current in motor armature loop	Fails Open	PLC input will remain de-energized. PLC will disable drive and set brakes.	No effect.	3

Table 18. **Electrical FMEA - Main Hoist Primary Mode**

System/Subsystem: 325 Ton Bridge Cranes at the Vehicle Assembly Building High Bays 1/2/3/4 / Main Hoist
PMN: H72-1200-01, -02
Drawing No.: EB-2508
Reference Figure: None

Find No. Part No.	Part Name	Part Function	a. Failure Mode b. Cause c. FMN d. Detection Method e. Correcting Action f. Time to Effect g. Timeframe	Failure Effect On System Performance	Failure Effect On Vehicle Systems And/Or Personnel Safety	Crit Cat
			Fails Closed	Excessive current can flow through associated motor. Motor will overheat. Motor overheat sensors will detect condition and disable drive. Delta Tau will continue to servo motor to commanded speed. If speed does not match speed commanded, Delta Tau will disable drive and set brakes.	No effect.	3
None	Ammeter	Indicated amount of current flowing in motor armature loop	Fails Open	Cab ammeter will indicate zero current for one hoist motor. Hoist will operate normally.	No effect.	3
			Fails Shorted	Excessive current will flow through ammeter windings resulting in windings burning open. See above.	No effect.	3
MESF1 MESF2	Fuse 1A	Provides overload protection for main hoist East motor control modules armature circuit	Premature Operation	Cab ammeter will indicate zero current for main hoist East motor. Hoist will operate normally.	No effect.	3
			Fails to Operate	Excessive current will flow through ammeter windings resulting in windings burning open. Excessive current can flow through motor. Motor will overheat. Motor overheat sensors will detect condition and disable drive. Delta Tau will allow motor to continue at commanded speed. If speed does not match speed commanded, Delta Tau will disable drive and set brakes.	No effect.	3

Table 18. **Electrical FMEA - Main Hoist Primary Mode**

System/Subsystem: 325 Ton Bridge Cranes at the Vehicle Assembly Building High Bays 1/2/3/4 / Main Hoist
PMN: H72-1200-01, -02
Drawing No.: EB-2508
Reference Figure: None

Find No. Part No.	Part Name	Part Function	a. Failure Mode b. Cause c. FMN d. Detection Method e. Correcting Action f. Time to Effect g. Timeframe	Failure Effect On System Performance	Failure Effect On Vehicle Systems And/Or Personnel Safety	Crit Cat
None	Main Hoist Motor, East	Provide torque to mechanical drive system to move load				
	Armature Windings	Provides torque to rotate motor output shaft	Fails Open	Loss of current path for one hoist motor. PLC will detect load imbalance and shut down drives and set brakes. Delta Tau motion controller will also detect loss of armature current feedback and signal PLC to shut down drives and set brakes. Delta Tau will continue to servo motor to commanded speed. If speed does not match speed commanded, Delta Tau will disable drive and set brakes.	No effect.	3
			Fails Shorted	Excessive current will flow through shorted motor. MEMCM will detect instantaneous overcurrent, disabling drive and setting brakes. Excessive current will trip overload switch, disabling drive or Delta Tau motion control board will detect following error.	No effect.	3
	Field Windings	Provides static magnetic field for armature magnetic field to work against	Fails Open	PLC will detect field loss and shut down drive and set brakes. Motor control module will detect field loss and drop out ready relays, disabling drives and setting brakes.	No effect.	3

Table 18. **Electrical FMEA - Main Hoist Primary Mode**

System/Subsystem: 325 Ton Bridge Cranes at the Vehicle Assembly Building High Bays 1/2/3/4 / Main Hoist
PMN: H72-1200-01, -02
Drawing No.: EB-2508
Reference Figure: None

Find No. Part No.	Part Name	Part Function	a. Failure Mode b. Cause c. FMN d. Detection Method e. Correcting Action f. Time to Effect g. Timeframe	Failure Effect On System Performance	Failure Effect On Vehicle Systems And/Or Personnel Safety	Crit Cat
			Fails Shorted	Excessive current will flow through remaining field winding creating a torque imbalance between the two motors. PLC will detect load imbalance and disable drives and set brakes. Delta Tau will continue to servo motor to commanded speed. If speed does not match speed commanded, Delta Tau will disable drive and set brakes.	No effect.	3
None	Speed Selection Switch	Contacts close to energize PLC inputs to select speed range	Fails Open (Single Contact)	Hoist will operate in slow speed range. PLC requires all PLC inputs to be configured properly to select a speed other than slow.	No effect.	3
			Fails Closed (Single Contact)	Hoist will operate in slow speed range. PLC requires all speed select inputs to be configured properly to select a speed other than slow.	No effect.	3
GI:05,IN1	PLC Input	Energizes when field weaken speed range is selected	Fails De-energized	Hoist will operate in slow speed range. PLC requires all PLC inputs to be configured properly to select a speed other than slow.	No effect.	3
			Fails Energized	Hoist will operate in slow speed range. PLC requires all speed select inputs to be configured properly to select a speed other than slow.	No effect.	3

Table 18. **Electrical FMEA - Main Hoist Primary Mode**

System/Subsystem: 325 Ton Bridge Cranes at the Vehicle Assembly Building High Bays 1/2/3/4 / Main Hoist
PMN: H72-1200-01, -02
Drawing No.: EB-2508
Reference Figure: None

Find No. Part No.	Part Name	Part Function	a. Failure Mode b. Cause c. FMN d. Detection Method e. Correcting Action f. Time to Effect g. Timeframe	Failure Effect On System Performance	Failure Effect On Vehicle Systems And/Or Personnel Safety	Crit Cat
GI:06,IN1	PLC Input	Energizes when field weaken speed range is selected	Fails De-energized	Hoist will operate in slow speed range. PLC requires all PLC inputs to be configured properly to select a speed other than slow.	No effect.	3
			Fails Energized	Hoist will operate in slow speed range. PLC requires all speed select inputs to be configured properly to select a speed other than slow.	No effect.	3
GI:05,IN2	PLC Input	Energizes when fast speed range is selected	Fails De-energized	Hoist will operate in slow speed range. PLC requires all PLC inputs to be configured properly to select a speed other than slow.	No effect.	3
			Fails Energized	Hoist will operate in slow speed range. PLC requires all speed select inputs to be configured properly to select a speed other than slow.	No effect.	3
GI:06,IN2	PLC Input	Energizes when fast speed range is selected	Fails De-energized	Hoist will operate in slow speed range. PLC requires all PLC inputs to be configured properly to select a speed other than slow.	No effect.	3
			Fails Energized	Hoist will operate in slow speed range. PLC requires all speed select inputs to be configured properly to select a speed other than slow.	No effect.	3

Table 18. **Electrical FMEA - Main Hoist Primary Mode**

System/Subsystem: 325 Ton Bridge Cranes at the Vehicle Assembly Building High Bays 1/2/3/4 / Main Hoist
PMN: H72-1200-01, -02
Drawing No.: EB-2508
Reference Figure: None

Find No. Part No.	Part Name	Part Function	a. Failure Mode b. Cause c. FMN d. Detection Method e. Correcting Action f. Time to Effect g. Timeframe	Failure Effect On System Performance	Failure Effect On Vehicle Systems And/Or Personnel Safety	Crit Cat
GI:05,IN3	PLC Input	Energizes when slow speed range is selected	Fails De-energized	Hoist will operate in slow speed range. PLC requires all PLC inputs to be configured properly to select a speed other than slow.	No effect.	3
			Fails Energized	Hoist will operate in slow speed range. PLC requires all PLC inputs to be configured properly to select a speed other than slow.	No effect.	3
GI:06,IN3	PLC Input	Energizes when slow speed range is selected	Fails De-energized	Hoist will operate in slow speed range. PLC requires all PLC inputs to be configured properly to select a speed other than slow.	No effect.	3
			Fails Energized	Hoist will operate in slow speed range. PLC requires all PLC inputs to be configured properly to select a speed other than slow.	No effect.	3
GI:05,IN4	PLC Input	Energizes when micro inch speed range is selected	Fails De-energized	Hoist will not operate in micro speed range.	No effect.	3
			Fails Energized	PLC will set electronic overspeed threshold to micro speed range value. Hoist will trip off for overspeed in other speed ranges.	No effect.	3
GI:06,IN6	PLC Input	Energizes when micro inch speed range is selected	Fails De-energized	Hoist will not operate in micro speed range.	No effect.	3

Table 18. **Electrical FMEA - Main Hoist Primary Mode**

System/Subsystem: 325 Ton Bridge Cranes at the Vehicle Assembly Building High Bays 1/2/3/4 / Main Hoist
PMN: H72-1200-01, -02
Drawing No.: EB-2508
Reference Figure: None

Find No. Part No.	Part Name	Part Function	a. Failure Mode b. Cause c. FMN d. Detection Method e. Correcting Action f. Time to Effect g. Timeframe	Failure Effect On System Performance	Failure Effect On Vehicle Systems And/Or Personnel Safety	Crit Cat
			Fails Energized	PLC will set electronic overspeed threshold to micro speed range value. Hoist will trip off for overspeed in other ranges.	No effect.	3
None	Foot switch	Contacts close to command “Float mode” operation	Fails Open	Hoist will not operate in “Float Mode”. Requires both contacts to close to enable “Float Mode”	No effect.	3
			Fails Closed	No effect. “Float Mode” will not operate until commanded by Foot Switch and Thumb Switch.	No effect.	3
GI:05,IN5	PLC Input	Energizes when Foot Switch is pressed, selecting “Float Mode”	Fails De-energized	Hoist will not operate in “Float Mode”. Requires both inputs to enable “Float Mode”.	No effect.	3
			Fails Energized	No effect. “Float Mode” will not operate until commanded by Foot Switch and Thumb Switch.	No effect.	3
GI:06,IN5	PLC Input	Energized when Foot Switch is pressed, selecting “Float Mode”	Fails De-energized	Hoist will not operate in “Float Mode”. Requires both inputs to enable “Float Mode”.	No effect.	3
			Fails Energized	No effect. “Float Mode” will not operate until commanded by Foot Switch and Thumb Switch.	No effect.	3
None	Master Switch	Provides interface from operator to command direction and speed of Main Hoist	* See component Breakdown below			

Table 18. **Electrical FMEA - Main Hoist Primary Mode**

System/Subsystem: 325 Ton Bridge Cranes at the Vehicle Assembly Building High Bays 1/2/3/4 / Main Hoist
PMN: H72-1200-01, -02
Drawing No.: EB-2508
Reference Figure: None

Find No. Part No.	Part Name	Part Function	a. Failure Mode b. Cause c. FMN d. Detection Method e. Correcting Action f. Time to Effect g. Timeframe	Failure Effect On System Performance	Failure Effect On Vehicle Systems And/Or Personnel Safety	Crit Cat
	* Thumb Switch	Contacts close to energize PLC inputs, commanding “Float Mode” brake release when Foot Switch is pressed.	Fails Open	Hoist “Float Mode” will not operate. Requires both Foot Switch and Thumb Switch inputs to enable “Float Mode”.	No effect.	3
			Fails Closed	No effect. Requires both Foot Switch and Thumb Switch inputs to enable “Float Mode”.	No effect.	3
	* Lower	Contacts close to energize PLC inputs, commanding Hoist to lower load	Fails Open (single contact)	Hoist will not operate in direction commanded. PLC requires both direction inputs to enable drive.	No effect.	3
			Fails Closed (single contact)	Loss of Master Switch 0.5 volt check when Master Switch is in the neutral position. Requires multiple failures for Master Switch to output higher than expected voltage. PLC requires both direction inputs to select direction.	No effect.	3
	* Hoist	Contacts close to energize PLC inputs, commanding Hoist to raise load	Fails Open (single contact)	Hoist will not operate in direction commanded. PLC requires both direction inputs to enable drive.	No effect.	3
			Fails Closed (single contact)	Loss of Master Switch 0.5 volt check when Master Switch is in the neutral position. Requires multiple failures for Master Switch to output higher than expected voltage. PLC requires both direction inputs to select direction.	No effect.	3

Table 18. **Electrical FMEA - Main Hoist Primary Mode**

System/Subsystem: 325 Ton Bridge Cranes at the Vehicle Assembly Building High Bays 1/2/3/4 / Main Hoist
PMN: H72-1200-01, -02
Drawing No.: EB-2508
Reference Figure: None

Find No. Part No.	Part Name	Part Function	a. Failure Mode b. Cause c. FMN d. Detection Method e. Correcting Action f. Time to Effect g. Timeframe	Failure Effect On System Performance	Failure Effect On Vehicle Systems And/Or Personnel Safety	Crit Cat
	* 5K Potentiometer	Provides 0 to 10 volt DC signal to PLC input commanding speed	Fails Open	Loss of speed command voltage to PLC inputs. PLC will scale speed command to minimum speed in range selected. Hoist will move in direction commanded at minimum speed when motion is commanded with the Master Switch.	No effect.	3
			Fails Short	Short will cause an overload of power supply 10PS. Overload will cause FU15 to blow and result in a loss of power to power supply 10PS. Loss of voltage will be detected by 10VSAR. 10VSAR drop out control power, disabling crane and setting all brakes.	No effect.	3
GI:05,IN6	PLC Input	Energizes when Thumb Switch contact closes, commanding brake release during “Float Mode”	Fails De-Energized	Hoist “Float Mode” will not operate. Requires both Foot Switch and Thumb Switch inputs to enable “Float Mode”.	No effect.	3
			Fails Energized	No effect. Requires both Foot Switch and Thumb Switch inputs to enable “Float Mode”.	No effect.	3
GI:06,IN6	PLC Input	Energizes when Thumb Switch contact closes, commanding brake release during “Float Mode”	Fails De-Energized	Hoist “Float Mode” will not operate. Requires both Foot Switch and Thumb Switch inputs to enable “Float Mode”.	No effect.	3

Table 18. **Electrical FMEA - Main Hoist Primary Mode**

System/Subsystem: 325 Ton Bridge Cranes at the Vehicle Assembly Building High Bays 1/2/3/4 / Main Hoist
PMN: H72-1200-01, -02
Drawing No.: EB-2508
Reference Figure: None

Find No. Part No.	Part Name	Part Function	a. Failure Mode b. Cause c. FMN d. Detection Method e. Correcting Action f. Time to Effect g. Timeframe	Failure Effect On System Performance	Failure Effect On Vehicle Systems And/Or Personnel Safety	Crit Cat
			Fails Energized	No effect. Requires both Foot Switch and Thumb Switch inputs to enable “Float Mode”.	No effect.	3
GI:05,IN7	PLC Input	Energizes when hoist contact closes, commanding hoist to raise load.	Fails De-Energized	Hoist will not operate in direction commanded. PLC requires both direction inputs to select direction.	No effect.	3
			Fails Energized	Loss of Master Switch 0.5 volt check when Master Switch is in the neutral position. Requires multiple failures for Master Switch to output higher than expected voltage. PLC requires both direction inputs to select direction.	No effect.	3
GI:06,IN7	PLC Input	Energizes when Hoist contacts closes, commanding hoist to raise load	Fails De-energized	Hoist will not operate in direction commanded. PLC requires both direction inputs to select direction.	No effect.	3
			Fails Energized	No effect. PLC requires other direction input to command motion and direction.	No effect.	3
GI:05,IN8	PLC Input	Energizes when lower contact closes, commanding hoist to lower load	Fails De-energized	Hoist will not operate in direction commanded. PLC requires both direction inputs to select direction.	No effect.	3

Table 18. **Electrical FMEA - Main Hoist Primary Mode**

System/Subsystem: 325 Ton Bridge Cranes at the Vehicle Assembly Building High Bays 1/2/3/4 / Main Hoist
PMN: H72-1200-01, -02
Drawing No.: EB-2508
Reference Figure: None

Find No. Part No.	Part Name	Part Function	a. Failure Mode b. Cause c. FMN d. Detection Method e. Correcting Action f. Time to Effect g. Timeframe	Failure Effect On System Performance	Failure Effect On Vehicle Systems And/Or Personnel Safety	Crit Cat
			Fails Energized	Loss of Master Switch 0.5 volt check when Master Switch is in the neutral position. Requires multiple failures for Master Switch to output higher than expected voltage. PLC requires both direction inputs to select direction.	No effect.	3
GI:06,IN8	PLC Input	Energizes when lower contact closes, commanding hoist to lower load	Fails De-energized	Hoist will not operate in direction commanded. PLC requires both direction inputs to select direction.	No effect.	3
			Fails Energized	No effect. PLC requires other direction input to command motion and direction.	No effect.	3
GI:01,01	PLC Input	Analog input for speed commanded	Fails Low or No Input	PLC will detect difference between two inputs. PLC will disable hoist drive and set brakes.	No effect.	3
			Fails High Input	PLC will detect difference between two inputs. PLC will disable hoist drive and set brakes.	No effect.	3
GI:03,01	PLC Input	Analog input for speed commanded	Fails Low or No Input	PLC will detect difference between two inputs. PLC will disable hoist drive and set brakes.	No effect.	3
			Fails High Input	PLC will detect difference between two inputs. PLC will disable hoist drive and set brakes.	No effect.	3

Table 18. **Electrical FMEA - Main Hoist Primary Mode**

System/Subsystem: 325 Ton Bridge Cranes at the Vehicle Assembly Building High Bays 1/2/3/4 / Main Hoist
PMN: H72-1200-01, -02
Drawing No.: EB-2508
Reference Figure: None

Find No. Part No.	Part Name	Part Function	a. Failure Mode b. Cause c. FMN d. Detection Method e. Correcting Action f. Time to Effect g. Timeframe	Failure Effect On System Performance	Failure Effect On Vehicle Systems And/Or Personnel Safety	Crit Cat
None	Float Mode Potentiometer	Provides interface from operator to command direction and speed of Main Hoist "Float Mode"	* See component Breakdown below			
	* Lower	Contacts close to energize PLC inputs, commanding hoist to lower load	Fails Open (single contact)	Hoist will not operate in direction commanded. PLC requires both direction inputs to select direction.	No effect.	3
			Fails Closed (single contact)	Loss of Master Switch 0.5 volt check when Master Switch is in the neutral position. Requires multiple failures for Master Switch to output higher than expected voltage. PLC requires both direction inputs to select direction.	No effect.	3
	* Hoist	Contacts close to energize PLC inputs, commanding hoist to raise load	Fails Open (single contact)	Hoist will not operate in direction commanded. PLC requires both direction inputs to select direction.	No effect.	3
			Fails Closed (single contact)	Loss of Master Switch 0.5 volt check when Master Switch is in the neutral position. Requires multiple failures for Master Switch to output higher than expected voltage. PLC requires both direction inputs to select direction.	No effect.	3

Table 18. **Electrical FMEA - Main Hoist Primary Mode**

System/Subsystem: 325 Ton Bridge Cranes at the Vehicle Assembly Building High Bays 1/2/3/4 / Main Hoist
PMN: H72-1200-01, -02
Drawing No.: EB-2508
Reference Figure: None

Find No. Part No.	Part Name	Part Function	a. Failure Mode b. Cause c. FMN d. Detection Method e. Correcting Action f. Time to Effect g. Timeframe	Failure Effect On System Performance	Failure Effect On Vehicle Systems And/Or Personnel Safety	Crit Cat
	* 5K Potentiometer	Provides 0 to 10 volt DC signal to PLC input commanding speed	Fails Open	Loss of speed command voltage to PLC inputs. PLC will scale speed command to minimum speed in Float range. Hoist will move in direction commanded at minimum speed when motion is commanded with the Float Master Switch.	No effect.	3
			Fails Short	Short will cause an overload of power supply 10PS. Overload will cause FU15 to blow and result in a loss of power to power supply 10-PS. Loss of voltage will be detected by 10VSAR. 10VSAR drop out control power, disabling crane and setting brakes.	No effect.	3
GI:05,IN9	PLC Input	Energizes when hoist contact closes, commanding hoist to raise load	Fails De-energized	Hoist will not operate in direction commanded. PLC requires both direction inputs to select direction.	No effect.	3
			Fails Energized	Loss of Master Switch 0.5 volt check when Master Switch is in the neutral position. Requires multiple failures for Master Switch to output higher than expected voltage. PLC requires both direction inputs to select direction.	No effect.	3
GI:06,IN9	PLC Input	Energizes when hoist contact closes, commanding hoist to raise load	Fails De-energized	Hoist will not operate in direction commanded. PLC requires both direction inputs to select direction.	No effect.	3

Table 18. **Electrical FMEA - Main Hoist Primary Mode**

System/Subsystem: 325 Ton Bridge Cranes at the Vehicle Assembly Building High Bays 1/2/3/4 / Main Hoist
PMN: H72-1200-01, -02
Drawing No.: EB-2508
Reference Figure: None

Find No. Part No.	Part Name	Part Function	a. Failure Mode b. Cause c. FMN d. Detection Method e. Correcting Action f. Time to Effect g. Timeframe	Failure Effect On System Performance	Failure Effect On Vehicle Systems And/Or Personnel Safety	Crit Cat
			Fails Energized	Loss of Master Switch 0.5 volt check when Master Switch is in the neutral position. Requires multiple failures for Master Switch to output higher than expected voltage. PLC requires both direction inputs to select direction.	No effect.	3
GI:05,IN10	PLC Input	Energizes when hoist contact closes, commanding hoist to lower load	Fails De-energized	Hoist will not operate in direction commanded. PLC requires both direction inputs to select direction.	No effect.	3
			Fails Energized	Loss of Master Switch 0.5 volt check when Master Switch is in the neutral position. Requires multiple failures for Master Switch to output higher than expected voltage. PLC requires both direction inputs to select direction.	No effect.	3
GI:06,IN10	PLC Input	Energizes when hoist contact closes, commanding hoist to lower load	Fails De-energized	Hoist will not operate in direction commanded. PLC requires both direction inputs to select direction.	No effect.	3
			Fails Energized	Loss of Master Switch 0.5 volt check when Master Switch is in the neutral position. Requires multiple failures for Master Switch to output higher than expected voltage. PLC requires both direction inputs to select direction.	No effect.	3

Table 18. **Electrical FMEA - Main Hoist Primary Mode**

System/Subsystem: 325 Ton Bridge Cranes at the Vehicle Assembly Building High Bays 1/2/3/4 / Main Hoist
PMN: H72-1200-01, -02
Drawing No.: EB-2508
Reference Figure: None

Find No. Part No.	Part Name	Part Function	a. Failure Mode b. Cause c. FMN d. Detection Method e. Correcting Action f. Time to Effect g. Timeframe	Failure Effect On System Performance	Failure Effect On Vehicle Systems And/Or Personnel Safety	Crit Cat
GI:01,02	PLC Input	Analog input for Float speed command	Fails Low or No Input	PLC will detect difference between two inputs. PLC will disable hoist drive and set brakes.	No effect.	3
			Fails High Input	PLC will detect difference between two inputs. PLC will disable hoist drive and set brakes.	No effect.	3
GI:03,I02	PLC Input	Analog input for Float speed command	Fails Low or No Input	PLC will detect difference between two inputs. PLC will disable hoist drive and set brakes.	No effect.	3
			Fails High Input	PLC will detect difference between two inputs. PLC will disable hoist drive and set brakes.	No effect.	3
None	Micro Inch Master Switch	Contacts close to command Micro Inch direction	Fails Open	No effect. PLC requires both direction and off inputs to be configured properly to command direction of motion and for speed selector switch to be in micro speed range before hoist will operate in micro speed range.	No effect.	3
			Fails Closed	No effect. PLC requires both direction and off inputs to be configured properly to command direction of motion and for speed selector switch to be in micro speed range before hoist will operate in micro speed range.	No effect.	3

Table 18. **Electrical FMEA - Main Hoist Primary Mode**

System/Subsystem: 325 Ton Bridge Cranes at the Vehicle Assembly Building High Bays 1/2/3/4 / Main Hoist
PMN: H72-1200-01, -02
Drawing No.: EB-2508
Reference Figure: None

Find No. Part No.	Part Name	Part Function	a. Failure Mode b. Cause c. FMN d. Detection Method e. Correcting Action f. Time to Effect g. Timeframe	Failure Effect On System Performance	Failure Effect On Vehicle Systems And/Or Personnel Safety	Crit Cat
GI:10,IN06	PLC Input	Energizes when micro inch hoist is commanded by micro inch Master Switch	Fails De-energized	No effect. PLC requires both direction and off inputs to be configured properly to command direction of motion and for speed selector switch to be in micro speed range before hoist will operate in micro speed range.	No effect.	3
			Fails Energized	No effect. PLC requires both direction and off inputs to be configured properly to command direction of motion and for speed selector switch to be in micro speed range before hoist will operate in micro speed range.	No effect.	3
GI:09,IN13	PLC Input	Energizes when OFF is commanded by micro inch Master Switch	Fails De-energized	No effect. PLC requires both direction and off inputs to be configured properly to command direction of motion and for speed selector switch to be in micro speed range before hoist will operate in micro speed range.	No effect.	3
			Fails Energized	No effect. PLC requires both direction and off inputs to be configured properly to command direction of motion and for speed selector switch to be in micro speed range before hoist will operate in micro speed range.	No effect.	3

Table 18. **Electrical FMEA - Main Hoist Primary Mode**

System/Subsystem: 325 Ton Bridge Cranes at the Vehicle Assembly Building High Bays 1/2/3/4 / Main Hoist
PMN: H72-1200-01, -02
Drawing No.: EB-2508
Reference Figure: None

Find No. Part No.	Part Name	Part Function	a. Failure Mode b. Cause c. FMN d. Detection Method e. Correcting Action f. Time to Effect g. Timeframe	Failure Effect On System Performance	Failure Effect On Vehicle Systems And/Or Personnel Safety	Crit Cat
GI:10,IN07	PLC Input	Energizes when micro inch lower is commanded by micro inch Master Switch	Fails De-energized	No effect. PLC requires both direction and off inputs to be configured properly to command direction of motion and for speed selector switch to be in micro speed range before hoist will operate in micro speed range.	No effect.	3
			Fails Energized	No effect. PLC requires both direction and off inputs to be configured properly to command direction of motion and for speed selector switch to be in micro speed range before hoist will operate in micro speed range.	No effect.	3
I:2,4,B6	PLC Input	De-energizes when overload switch detects excessive current in Main Hoist west armature current loop	Fails De-energized	PLC will detect excessive current through motor. PLC will disable drive and set brakes.	No effect.	3
			Fails Energized	Excessive current can flow through associated motor. Motor will overheat. Sensors will detect condition and disable drive. Delta Tau will continue to servo motor to commanded speed. If speed does not match speed commanded, Delta Tau will disable drive and set brakes.	No effect.	3

Table 18. **Electrical FMEA - Main Hoist Primary Mode**

System/Subsystem: 325 Ton Bridge Cranes at the Vehicle Assembly Building High Bays 1/2/3/4 / Main Hoist
PMN: H72-1200-01, -02
Drawing No.: EB-2508
Reference Figure: None

Find No. Part No.	Part Name	Part Function	a. Failure Mode b. Cause c. FMN d. Detection Method e. Correcting Action f. Time to Effect g. Timeframe	Failure Effect On System Performance	Failure Effect On Vehicle Systems And/Or Personnel Safety	Crit Cat
I:2,4,B7	PLC Input	De-energizes when overload switch detects excessive current in Main Hoist East armature current loop	Fails De-energized	PLC will detect excessive current through motor. PLC will disable drive and set brakes.	No effect.	3
			Fails Energized	Excessive current can flow through associated motor. Motor will overheat. Sensors will detect condition and disable drive. Delta Tau will continue to servo motor to commanded speed. If speed does not match speed commanded, Delta Tau will disable drive and set brakes.	No effect.	3
MPT	Main Power Up Timer Relay	Energizes when Main Hoist control circuitry is powered	Fails De-energized	Circuit will not be completed for most contacts to energize shunt trip of main circuit Breaker if main hoist centrifugal overspeed switch trips. Requires previous failures to cause centrifugal overspeed switch to trip.	No effect.	3
			Fails Energized	Shunt trip of main circuit Breaker will be energized when power is applied to crane, removing all power from crane.	No effect.	3
	Contact	Closes after time delay to enable overspeed trip of shunt trip for main circuit Breaker	Fails Open	Circuit will not be completed for most contacts to energize shunt trip of main circuit Breaker if main hoist centrifugal overspeed switch trips. Requires previous failures to cause centrifugal overspeed switch to trip.	No effect.	3

Table 18. **Electrical FMEA - Main Hoist Primary Mode**

System/Subsystem: 325 Ton Bridge Cranes at the Vehicle Assembly Building High Bays 1/2/3/4 / Main Hoist
PMN: H72-1200-01, -02
Drawing No.: EB-2508
Reference Figure: None

Find No. Part No.	Part Name	Part Function	a. Failure Mode b. Cause c. FMN d. Detection Method e. Correcting Action f. Time to Effect g. Timeframe	Failure Effect On System Performance	Failure Effect On Vehicle Systems And/Or Personnel Safety	Crit Cat
			Fails Closed	Shunt trip of main circuit Breaker will be energized when power is applied to crane, removing all power from crane.	No effect.	3
MOS	Mechanical Overspeed Switch (centrifugal)	Switch opens when main hoist rotation speed exceeds preset value	Fails Open	Shunt trip of main circuit Breaker will be energized when power is applied to crane, removing all power from crane.	No effect.	3
			Fails Closed	Loss of protection from centrifugal overspeed switch. PLC will detect overspeed condition and shut down drives and set brakes. Requires previous failures to cause overspeed.	No effect.	3
MOST	Main Hoist Overspeed Time Delay Relay	De-energizes when overspeed is detected by mechanical overspeed switch	Fails De-energized	Shunt trip of main circuit Breaker will be energized when power is applied to crane, removing all power from crane.	No effect.	3
			Fails Energized	Loss of protection from centrifugal overspeed switch. PLC will detect overspeed condition and shut down drives and set brakes. Requires previous failures to cause overspeed.	No effect.	3
	Contact	Closes to energize shunt trip on main circuit Breaker when overspeed is detected in main hoist	Fails Open	Loss of protection from centrifugal overspeed switch. PLC will detect overspeed condition and shut down drives and set brakes. Requires previous failures to cause overspeed.	No effect.	3

Table 18. **Electrical FMEA - Main Hoist Primary Mode**

System/Subsystem: 325 Ton Bridge Cranes at the Vehicle Assembly Building High Bays 1/2/3/4 / Main Hoist
PMN: H72-1200-01, -02
Drawing No.: EB-2508
Reference Figure: None

Find No. Part No.	Part Name	Part Function	a. Failure Mode b. Cause c. FMN d. Detection Method e. Correcting Action f. Time to Effect g. Timeframe	Failure Effect On System Performance	Failure Effect On Vehicle Systems And/Or Personnel Safety	Crit Cat
			Fails Closed	Shunt trip of main circuit Breaker will be energized when power is applied to crane, removing all power from crane.	No effect.	3
None	Main Hoist Geared Lower Limit Switch	Switch opens when load block reaches preset lower limit of travel	Fails Open	Hoist will not operate in the down direction.	No effect.	3
			Fails Closed	Load block will continue downward motion until load block contacts floor. Requires operator error to contact load block to floor. Observers at floor level will warn operator of possible contact.	No effect.	3
I:2,4,A1	PLC Input	De-energizes when geared lower limit switch is tripped	Fails De-energized	Hoist will not operate in the down direction.	No effect.	3
			Fails Energized	Load block will continue downward motion until load block contacts floor. Requires operator error to contact load block to floor. Observers at floor level will warn operator of possible contact.	No effect.	3
None	Main Hoist First Upper Limit Switch	Switch opens when load block reaches first upper limit, marking end of travel	Fails Open	Hoist will not operate in the UP direction. Hoist will operate in the DOWN direction.	No effect.	3

Table 18. **Electrical FMEA - Main Hoist Primary Mode**

System/Subsystem: 325 Ton Bridge Cranes at the Vehicle Assembly Building High Bays 1/2/3/4 / Main Hoist
PMN: H72-1200-01, -02
Drawing No.: EB-2508
Reference Figure: None

Find No. Part No.	Part Name	Part Function	a. Failure Mode b. Cause c. FMN d. Detection Method e. Correcting Action f. Time to Effect g. Timeframe	Failure Effect On System Performance	Failure Effect On Vehicle Systems And/Or Personnel Safety	Crit Cat
			Fails Closed	Hoist motion can continue in the UP direction until the Final Upper Limit Switch is tripped, removing all power from the crane. Requires operator error to trip Upper Limit Switch.	No effect.	3
I:2,3,A2	PLC Input	De-energizes when first upper limit switch is tripped	Fails De-energized	Hoist will not operate in the UP direction. Hoist will operate in the DOWN direction.	No effect.	3
			Fails Energized	Hoist motion can continue in the UP direction until the Final Upper Limit Switch is tripped, removing all power from the crane. Requires operator error to trip Upper Limit Switch.	No effect.	3
None	Main Hoist Equalizer Travel Limit Switch (2 each)	Switch opens when equalizer has excessive travel, indicating improper wire rope spooling	Fails Open	Hoist will be disabled and brakes will be set. Backing out of error requires use of bypass key.	No effect.	3
			Fails Closed	Requires previous failure in rope spooling on wire rope drum. Rope spooling limit switch will trip, preventing any further hoist motion UP.	No effect.	3
I:2,4,B2	PLC Input	De-energizes when Equalizer Limit Switch is tripped	Fails De-energized	Hoist will be disabled and brakes will be set. Backing out of error requires use of bypass key.	No effect.	3

Table 18. **Electrical FMEA - Main Hoist Primary Mode**

System/Subsystem: 325 Ton Bridge Cranes at the Vehicle Assembly Building High Bays 1/2/3/4 / Main Hoist
PMN: H72-1200-01, -02
Drawing No.: EB-2508
Reference Figure: None

Find No. Part No.	Part Name	Part Function	a. Failure Mode b. Cause c. FMN d. Detection Method e. Correcting Action f. Time to Effect g. Timeframe	Failure Effect On System Performance	Failure Effect On Vehicle Systems And/Or Personnel Safety	Crit Cat
			Fails Energized	Requires previous failure in rope spooling on wire rope drum. Rope spooling limit switch will trip, preventing any further hoist motion UP.	No effect.	3
None	Main Hoist Rope Spooling Limit Switch (4 each)	Switch opens when wire rope spools improperly	Fails Open	Hoist will be disabled and brakes will be set. Backing out of error requires use of bypass key.	No effect.	3
			Fails Closed	Requires previous failure in rope spooling on wire rope drum. If improper spooling persists, equalizer travel will become excessive, tripping equalizer limit switch and preventing any further hoist motion UP.	No effect.	3
I:2,4,B3	PLC Input	De-energizes when rope spooling limit switch is tripped	Fails De-energized	Hoist will be disabled and brakes will be set. Backing out of error requires use of bypass key.	No effect.	3
			Fails Energized	Requires previous failure in rope spooling on wire rope drum. If improper spooling persists, equalizer travel will become excessive, tripping equalizer limit switch and preventing any further hoist motion UP.	No effect.	3
GO:11,01	PLC Input	Supplies power to equalizer travel error light on control console	Fails De-energized	Equalizer travel error light will not illuminate when error occurs. Hoist will be disabled and brakes will be set.	No effect.	3

Table 18. **Electrical FMEA - Main Hoist Primary Mode**

System/Subsystem: 325 Ton Bridge Cranes at the Vehicle Assembly Building High Bays 1/2/3/4 / Main Hoist
PMN: H72-1200-01, -02
Drawing No.: EB-2508
Reference Figure: None

Find No. Part No.	Part Name	Part Function	a. Failure Mode b. Cause c. FMN d. Detection Method e. Correcting Action f. Time to Effect g. Timeframe	Failure Effect On System Performance	Failure Effect On Vehicle Systems And/Or Personnel Safety	Crit Cat
			Fails Energized	Equalizer travel error light will remain illuminated continuously. Hoist will operate normally.	No effect.	3
None	Indicator Light	Indicates when equalizer travel error has occurred	Fails Open	Equalizer travel error light will not illuminate when error occurs. Hoist will be disabled and brakes will be set.	No effect.	3
			Fails Shorted	When equalizer travel error occurs, short will cause overload in control circuit causing FU12 to blow. Hoist drives will be disabled and brakes will set.	No effect.	3
GO:11,02	PLC Output	Supplies power to rope spooling error light on control console	Fails De-energized	Rope spooling error light will not illuminate when error occurs. Hoist will be disabled and brakes will be set.	No effect.	3
			Fails Energized	Rope spooling error light will remain illuminated continuously. Hoist will operate normally.	No effect.	3
None	Indicator Light	Indicates when rope spooling error has occurred	Fails Open	Rope spooling error light will not illuminate when error occurs. Hoist will be disabled and brakes will be set.	No effect.	3
			Fails Shorted	When rope spooling error occurs, short will cause overload in control circuit causing FU12 to blow. Hoist drives will be disabled and brakes will set.	No effect.	3

Table 18. **Electrical FMEA - Main Hoist Primary Mode**

System/Subsystem: 325 Ton Bridge Cranes at the Vehicle Assembly Building High Bays 1/2/3/4 / Main Hoist
PMN: H72-1200-01, -02
Drawing No.: EB-2508
Reference Figure: None

Find No. Part No.	Part Name	Part Function	a. Failure Mode b. Cause c. FMN d. Detection Method e. Correcting Action f. Time to Effect g. Timeframe	Failure Effect On System Performance	Failure Effect On Vehicle Systems And/Or Personnel Safety	Crit Cat
GO:11,03	PLC Output	Supplies power to field weaken permissive light on control console	Fails De-energized	Field weaken permissive light will not illuminate when field weaken operation is allowed. Field weaken speed will operate normally.	No effect.	3
			Fails Energized	Field weaken permissive light will remain illuminated continuously.	No effect.	3
None	Indicator Light	Indicates when field weaken speed is allowed	Fails Open	Field weaken permissive light will not illuminate when field weaken operation is allowed. Field weaken speed will operate normally.	No effect.	3
			Fails Shorted	When field weaken speed is allowed, short will cause overload in control circuit causing FU12 to blow, hoist drives will be disabled and brakes will set.	No effect.	3
I:2,5,B5	PLC Input	Energized when relay MWBR contact closes	Fails De-energized	PLC will detect blower shut down, set error bit, disable drives and set brakes.	No effect.	3
			Fails Energized	PLC will not detect blower shut down. Hoist motor will overheat. Overheat sensors will detect overheat condition. PLC will disable drives and set brakes.	No effect.	3
I:2,5,B6	PLC Input	Energized when relay MWBR contact closes	Fails De-energized	PLC will detect blower shut down, set error bit, disable drives and set brakes.	No effect.	3

Table 18. **Electrical FMEA - Main Hoist Primary Mode**

System/Subsystem: 325 Ton Bridge Cranes at the Vehicle Assembly Building High Bays 1/2/3/4 / Main Hoist
PMN: H72-1200-01, -02
Drawing No.: EB-2508
Reference Figure: None

Find No. Part No.	Part Name	Part Function	a. Failure Mode b. Cause c. FMN d. Detection Method e. Correcting Action f. Time to Effect g. Timeframe	Failure Effect On System Performance	Failure Effect On Vehicle Systems And/Or Personnel Safety	Crit Cat
			Fails Energized	PLC will not detect blower shut down. Hoist motor will overheat. Overheat sensors will detect overheat condition. PLC will disable drives and set brakes.	No effect.	3
MWMOV1	Main Hoist west Metal Oxide Varistor	Becomes an electrical short when a set voltage is exceeded	Fails Open	Loss of overvoltage protection to DC contactor circuit. Isolation transformers will limit voltage spikes. Other MOV will shunt spikes to ground.	No effect.	3
			Fails Shorted	Short will cause overload in control circuit causing FU12 to blow. Hoist drives will be disabled and brakes will set.	No effect.	3
MRECT1	Main Hoist Rectifier	Converts AC power to DC power for DC contactor circuit	Fails Open	Loss of power to DC contactor circuit. DC armature loop will open. PLC will detect load imbalance and disable drives and set brakes at end of commanded motion.	No effect.	3
			Fails Shorted	Excessive current will flow into DC contactor circuit. Circuit will perform normally or component will be damaged leading to loss of power to DC contactor circuit. DC armature loop will open. PLC will detect load imbalance and disable drives and set brakes at end of commanded motion.	No effect.	3

Table 18. **Electrical FMEA - Main Hoist Primary Mode**

System/Subsystem: 325 Ton Bridge Cranes at the Vehicle Assembly Building High Bays 1/2/3/4 / Main Hoist
PMN: H72-1200-01, -02
Drawing No.: EB-2508
Reference Figure: None

Find No. Part No.	Part Name	Part Function	a. Failure Mode b. Cause c. FMN d. Detection Method e. Correcting Action f. Time to Effect g. Timeframe	Failure Effect On System Performance	Failure Effect On Vehicle Systems And/Or Personnel Safety	Crit Cat
MWR1	Main Hoist West Resistor	Limits current in DC contactor circuit	Fails Open	Back EMF from MWDC will damage MWFRDY contacts when relay MWFRDY drops out. Contact will fail open.	No effect.	3
			Fails Shorted	Surge from MWDC dropping out will damage rectifier, leading to loss of power to DC contactor circuit. DC armature loop will open, PLC will detect load imbalance and disable drives and set brakes at end of commanded motion.	No effect.	3
MWR2	Main Hoist West Resistor	Discharges MWC1 after MWRDY contact in circuit opens	Fails Open	Back EMF from MWDC will damage MWFRDY contacts when relay MWFRDY drops out. Contact will fail open.	No effect.	3
			Fails Shorted	Back EMF from MWDC will damage MRECT1 leading to loss of power to DC contactor circuit. DC armature loop will open, PLC will detect load imbalance and disable drives and set brakes at end of commanded motion.	No effect.	3
MWC1	Main Hoist West Capacitor	Stores charge from MWDC back EMF when MWFRDY contact opens	Fails Open	Back EMF from MWDC will damage MWRDY contacts when relay MWRDY drops out. Contact will fail open.	No effect.	3

Table 18. **Electrical FMEA - Main Hoist Primary Mode**

System/Subsystem: 325 Ton Bridge Cranes at the Vehicle Assembly Building High Bays 1/2/3/4 / Main Hoist
PMN: H72-1200-01, -02
Drawing No.: EB-2508
Reference Figure: None

Find No. Part No.	Part Name	Part Function	a. Failure Mode b. Cause c. FMN d. Detection Method e. Correcting Action f. Time to Effect g. Timeframe	Failure Effect On System Performance	Failure Effect On Vehicle Systems And/Or Personnel Safety	Crit Cat
			Fails Shorted	Back EMF from MWDC will damage MRECT1 leading to loss of power to DC contactor circuit. DC armature loop will open, PLC will detect load imbalance and disable drives and set brakes at end of commanded motion.	No effect.	3
MWR3	Main Hoist West Resistor	Limits current in DC contactor circuit	Fails Open	Loss of holding current when MWDC contact opens. Relay MWDC will continue to cycle open and closed, Hoist will not operate.	No effect.	3
			Fails Shorted	High current will cause damage to coil of MWDC. DC armature loop will open. PLC will detect load imbalance and disable drives and set brakes at end of commanded motion.	No effect.	3
MWDC	Main Hoist West DC Contactor Relay	Energizes when Main Hoist West Drive is enabled	Fails De-energized	DC armature loop will open, PLC will detect load imbalance and disable drives and set brakes at end of commanded motion.	No effect.	3
			Fails Energized	DC motor armature loop will remain closed. PLC will disable drives and set brakes.	No effect.	3
	Contact	Closes to complete DC armature loop of main hoist west motor	Fails Open	DC armature loop will remain open. PLC will detect load imbalance and disable drives and set brakes at end of commanded motion.	No effect.	3

Table 18. **Electrical FMEA - Main Hoist Primary Mode**

System/Subsystem: 325 Ton Bridge Cranes at the Vehicle Assembly Building High Bays 1/2/3/4 / Main Hoist
PMN: H72-1200-01, -02
Drawing No.: EB-2508
Reference Figure: None

Find No. Part No.	Part Name	Part Function	a. Failure Mode b. Cause c. FMN d. Detection Method e. Correcting Action f. Time to Effect g. Timeframe	Failure Effect On System Performance	Failure Effect On Vehicle Systems And/Or Personnel Safety	Crit Cat
			Fails Closed	DC motor armature loop will remain closed. PLC will disable drives and set brakes.	No effect.	3
	Contact, Normally Closed	Opens to put MWR3 into relay MWDC circuit path	Fails Open	MWDC will not receive sufficient current to energize. DC armature loop will remain open. PLC will detect load imbalance and disable drives and set brakes at end of commanded motion.	No effect.	3
			Fails Closed	High current will cause damage to coil of MWDC. DC armature loop will open. PLC will detect load imbalance and disable drives and set brakes at end of commanded motion.	No effect.	3
	Contact	Closes to enable MWFSA and MWMCM	Fails Open	MWFSA will not enable MWMCM. Hoist will not operate. Brakes will (remain) set.	No effect.	3
			Fails Closed	Other MWDC contact will open DC motor armature loop. PLC will disable drives and setting brakes.	No effect.	3
MEMOV1	Main Hoist East Metal Oxide Varistor	Becomes an electrical short when a set voltage is exceeded	Fails Open	Loss of overvoltage protection to DC contactor circuit. Isolation transformers will limit voltage spikes. Other MOV will shunt spikes to ground.	No effect.	3
			Fails Shorted	Short will cause overload in control circuit causing FU12 to blow. Hoist drives will be disabled and brakes will set.	No effect.	3

Table 18. **Electrical FMEA - Main Hoist Primary Mode**

System/Subsystem: 325 Ton Bridge Cranes at the Vehicle Assembly Building High Bays 1/2/3/4 / Main Hoist
PMN: H72-1200-01, -02
Drawing No.: EB-2508
Reference Figure: None

Find No. Part No.	Part Name	Part Function	a. Failure Mode b. Cause c. FMN d. Detection Method e. Correcting Action f. Time to Effect g. Timeframe	Failure Effect On System Performance	Failure Effect On Vehicle Systems And/Or Personnel Safety	Crit Cat
MRECT2	Main Hoist Rectifier	Converts AC power to DC power for DC contactor circuit	Fails Open	Loss of power to DC contactor circuit. DC armature loop will open. PLC will detect load imbalance and disable drives and set brakes at end of commanded motion.	No effect.	3
			Fails Shorted	Excessive current will flow into DC contactor circuit. Circuit will perform normally or component will be damaged leading to loss of power to DC contactor circuit. DC armature loop will open. PLC will detect load imbalance and disable drives and set brakes at end of commanded motion.	No effect.	3
MER1	Main Hoist East Resistor	Limits current in DC contactor circuit	Fails Open	Back EMF from MEDC will damage MEFRDY contacts when relay MEFRDY drops out. Contact will fail open.	No effect.	3
			Fails Shorted	Surge from MEDC dropping out will damage rectifier, leading to loss of power to DC contactor circuit. DC armature loop will open. PLC will detect load imbalance and disable drives and set brakes at end of commanded motion.	No effect.	3
MER2	Main Hoist East Resistor	Discharges MEC1 after MERDY contact in circuit opens	Fails Open	Back EMF from MEDC will damage MEFRDY contacts when relay MEFRDY drops out. Contact will fail open.	No effect.	3

Table 18. **Electrical FMEA - Main Hoist Primary Mode**

System/Subsystem: 325 Ton Bridge Cranes at the Vehicle Assembly Building High Bays 1/2/3/4 / Main Hoist
PMN: H72-1200-01, -02
Drawing No.: EB-2508
Reference Figure: None

Find No. Part No.	Part Name	Part Function	a. Failure Mode b. Cause c. FMN d. Detection Method e. Correcting Action f. Time to Effect g. Timeframe	Failure Effect On System Performance	Failure Effect On Vehicle Systems And/Or Personnel Safety	Crit Cat
			Fails Shorted	Back EMF from MEDC will damage MRECT2 leading to loss of power to DC contactor circuit. DC armature loop will open. PLC will detect load imbalance and disable drives and set brakes at end of commanded motion.	No effect.	3
MEC1	Main Hoist East Capacitor	Stores charge from MEDC back EMF when MEFRDY contact opens	Fails Open	Back EMF from MEDC will damage MERDY contacts when relay MERDY drops out. Contact will fail open.	No effect.	3
			Fails Shorted	Back EMF from MEDC will damage MRECT2 leading to loss of power to DC contactor circuit. DC armature loop will open. PLC will detect load imbalance and disable drives and set brakes at end of commanded motion.	No effect.	3
MER3	Main Hoist East Resistor	Limits current in DC contactor circuit	Fails Open	Loss of holding current when MEDC contact opens. Relay MEDC will continue to cycle open and closed. Hoist will not operate.	No effect.	3
			Fails Shorted	High current will cause damage coil of MEDC. DC armature loop will open, PLC will detect load imbalance and disable drives and set brakes at end of commanded motion.	No effect.	3

Table 18. **Electrical FMEA - Main Hoist Primary Mode**

System/Subsystem: 325 Ton Bridge Cranes at the Vehicle Assembly Building High Bays 1/2/3/4 / Main Hoist
PMN: H72-1200-01, -02
Drawing No.: EB-2508
Reference Figure: None

Find No. Part No.	Part Name	Part Function	a. Failure Mode b. Cause c. FMN d. Detection Method e. Correcting Action f. Time to Effect g. Timeframe	Failure Effect On System Performance	Failure Effect On Vehicle Systems And/Or Personnel Safety	Crit Cat
MEDC	Main Hoist East DC contactor Relay	Energizes when main Hoist East drive is enabled	Fails De-energized	DC armature loop will open. PLC will detect load imbalance and disable drives and set brakes at end of commanded motion.	No effect.	3
			Fails Energized	DC motor armature loop will remain closed. PLC will disable drives and set brakes.	No effect.	3
	Contact	Closed to complete DC armature loop of main hoist East motor	Fails Open	DC armature loop will remain open. PLC will detect load imbalance and disable drives and set brakes at end of commanded motion.	No effect.	3
			Fails Closed	DC motor armature loop will remain closed. PLC will disable drives and set brakes.	No effect.	3
	Contact, Normally Closed	Opens to put MER3 into relay MEDC Circuit path	Fails Open	MEDC will not receive sufficient current to energize. DC armature loop will remain open. PLC will detect load imbalance and disable drives and set brakes at end of commanded motion.	No effect.	3
			Fails Closed	High current will cause damage to coil of MWDC. DC armature loop will open. PLC will detect load imbalance and disable drives and set brakes at end of commanded motion.	No effect.	3
	Contact	Closes to enable MEFSA and MEMCM	Fails Open	MEFSA will not enable MEMCM. Hoist will not operate. Brakes will (remain) set.	No effect.	3

Table 18. **Electrical FMEA - Main Hoist Primary Mode**

System/Subsystem: 325 Ton Bridge Cranes at the Vehicle Assembly Building High Bays 1/2/3/4 / Main Hoist
PMN: H72-1200-01, -02
Drawing No.: EB-2508
Reference Figure: None

Find No. Part No.	Part Name	Part Function	a. Failure Mode b. Cause c. FMN d. Detection Method e. Correcting Action f. Time to Effect g. Timeframe	Failure Effect On System Performance	Failure Effect On Vehicle Systems And/Or Personnel Safety	Crit Cat
			Fails Closed	Other MEDC contact will open DC motor armature loop. PLC will disable drives and setting brakes.	No effect.	3
O:1,7,A1	PLC Output	Supplies power to energize relay MWDE and PLC input	Fails De-energized	Relay MWDE will not be energized. West drive will not be enabled. Hoist will not operate.	No effect.	3
			Fails Energized	Other PLC output will de-energize relay MWDE.	No effect.	3
O:1,8,A1	PLC Output	Supplies power to energize relay MWDE and PLC input	Fails De-energized	Relay MWDE will not be energized. West drive will not be enabled. Hoist will not operate.	No effect.	3
			Fails Energized	Other PLC output will de-energize relay MWDE.	No effect.	3
I:2,3,A3	PLC Input	Energizes when power is supplied to relay MWDE	Fails De-energized	PLC will detect East and west drive circuit Breaker configuration does not match drive select switch. PLC will not allow hoist to operate. Brakes will remain set.	No effect.	3
			Fails Energized	MWDE contacts will disable MWMCM and cause MWDC contactor to open DC motor armature loop. PLC will disable drives and set brakes.	No effect.	3
MWDE	Main Hoist West Drive Enable Relay	Energizes when main hoist west drive is enabled by PLC and relays MWRDY and MWFLT	Fails De-energized	MWDE contacts will not enable MWMCM or cause MWDC contactor to close DC motor armature loop. PLC will disable drives and set brakes.	No effect.	3

Table 18. **Electrical FMEA - Main Hoist Primary Mode**

System/Subsystem: 325 Ton Bridge Cranes at the Vehicle Assembly Building High Bays 1/2/3/4 / Main Hoist
PMN: H72-1200-01, -02
Drawing No.: EB-2508
Reference Figure: None

Find No. Part No.	Part Name	Part Function	a. Failure Mode b. Cause c. FMN d. Detection Method e. Correcting Action f. Time to Effect g. Timeframe	Failure Effect On System Performance	Failure Effect On Vehicle Systems And/Or Personnel Safety	Crit Cat
			Fails Energized	Requires previous failures to de-energize. Previous failures will have either faulted the motor control module or were detected by the PLC. Drives will be disabled and brakes will set.	No effect.	3
	Contact	Closes to supply power to relay MWDC circuit	Fails Open	Relay MWDC will not energize to complete DC motor armature loop. PLC will detect load imbalance and disable drives and set brakes. Delta Tau motion controller will detect following error and signal PLC to disable drives and set brakes.	No effect.	3
			Fails Closed	Requires previous failures to de-energize. Previous failure will have either faulted the motor control module or were detected by the PLC. Drives will be disabled and brakes will set.	No effect.	3
	Contact	Closes to enable MWMCM	Fails Open	Motor control module will not be enabled. Hoist will not operate. Brakes will (remain) set.	No effect.	3
			Fails Closed	Requires previous failures to de-energize. Previous failures will have either faulted the motor control module or were detected by the PLC. Drives will be disabled and brakes will set.	No effect.	3

Table 18. **Electrical FMEA - Main Hoist Primary Mode**

System/Subsystem: 325 Ton Bridge Cranes at the Vehicle Assembly Building High Bays 1/2/3/4 / Main Hoist
PMN: H72-1200-01, -02
Drawing No.: EB-2508
Reference Figure: None

Find No. Part No.	Part Name	Part Function	a. Failure Mode b. Cause c. FMN d. Detection Method e. Correcting Action f. Time to Effect g. Timeframe	Failure Effect On System Performance	Failure Effect On Vehicle Systems And/Or Personnel Safety	Crit Cat
O:1,7,A2	PLC Output	Supplies power to energize relay MEDE and PLC input	Fails De-energized	Relay MEDE will not be energized. East drive will not be enabled. Hoist will not operate.	No effect.	3
			Fails Energized	Other PLC output will de-energize relay MEDE.	No effect.	3
O:1,8,A2	PLC Output	Supplies power to energize relay MEDE and PLC input	Fails De-energized	Relay MEDE will not be energized. East drive will not be enabled. Hoist will not operate.	No effect.	3
			Fails Energized	Other PLC output will de-energize relay MWDE.	No effect.	3
I:2,3,A4	PLC Input	Energizes when power is supplied to relay MEDE	Fails De-energized	PLC will detect circuit Breaker does not match drive select switch. PLC will not allow hoist to operate. Brakes will remain set.	No effect.	3
			Fails Energized	MEDE contacts will disable MEMCM and cause MEDC contactor to open DC motor armature loop. PLC will disable drives and set brakes.	No effect.	3
MEDE	Main Hoist East Drive Enable Relay	Energizes when main Hoist East drive is enabled by PLC and relays MERDY and MEFLT	Fails De-energized	MEDE contacts will not enable MEMCM or cause MEDC contactor to close DC motor armature loop. PLC will disable drives and set brakes.	No effect.	3
			Fails Energized	Requires previous failures to de-energize. Previous failures will have either faulted the motor control module or were detected by the PLC. Drives will be disabled and brakes will set.	No effect.	3

Table 18. **Electrical FMEA - Main Hoist Primary Mode**

System/Subsystem: 325 Ton Bridge Cranes at the Vehicle Assembly Building High Bays 1/2/3/4 / Main Hoist
PMN: H72-1200-01, -02
Drawing No.: EB-2508
Reference Figure: None

Find No. Part No.	Part Name	Part Function	a. Failure Mode b. Cause c. FMN d. Detection Method e. Correcting Action f. Time to Effect g. Timeframe	Failure Effect On System Performance	Failure Effect On Vehicle Systems And/Or Personnel Safety	Crit Cat
	Contact	Closes to supply power to relay MEDC circuit	Fails Open	Relay MEDC will not energize to complete DC motor armature loop. PLC will detect load imbalance and disable drives and set brakes. Delta Tau motion controller will detect following error and signal PLC to disable drives and set brakes.	No effect.	3
			Fails Closed	Requires previous failures to de-energize. Previous failures will have either faulted the motor control module or were detected by the PLC. Drives will be disabled and brakes will (remain) set.	No effect.	3
	Contact	Closes to enable MEMCM	Fails Open	Motor control module will not be enabled. Hoist will not operate. Brakes will (remain) set.	No effect.	3
			Fails Closed	Requires previous failures to de-energize. Previous failures will have either faulted the motor control module or were detected by the PLC. Drives will be disabled and brakes will (remain) set.	No effect.	3
O:1,7,A3	PLC Input	Supplies power to energize relays MBACW, MBDCW and PLC input	Fails De-Energized	West brake will not release when commanded by PLC. Motors will attempt to drive through brake. Delta Tau motion controller will detect following error and send error message to PLC. PLC will disable hoist and set brakes.	No effect.	3

Table 18. **Electrical FMEA - Main Hoist Primary Mode**

System/Subsystem: 325 Ton Bridge Cranes at the Vehicle Assembly Building High Bays 1/2/3/4 / Main Hoist
PMN: H72-1200-01, -02
Drawing No.: EB-2508
Reference Figure: None

Find No. Part No.	Part Name	Part Function	a. Failure Mode b. Cause c. FMN d. Detection Method e. Correcting Action f. Time to Effect g. Timeframe	Failure Effect On System Performance	Failure Effect On Vehicle Systems And/Or Personnel Safety	Crit Cat
			Fails Energized	No effect. West brake will not release until both PLC outputs energize.	No effect.	3
O:1,8,A3	PLC Output	Supplies power to energize relays MBACW, MBDCW and PLC Input	Fails De-Energized	West brake will not release when commanded by PLC. Motors will attempt to drive through brake. Delta Tau motion controller will detect following error and send error message to PLC. PLC will disable hoist and set brakes.	No effect.	3
			Fails Energized	No effect. West brake will not release until both PLC outputs energize.	No effect.	3
MBACW	Main Hoist Brake AC West Relay	Energizes when PLC commands brakes to release	Fails De-Energized	West brake will not release when commanded by PLC. Motors will attempt to drive through brake. Delta Tau motion controller will detect following error and send error message to PLC. PLC will disable hoist and set brakes.	No effect.	3
			Fails Energized	No effect. West brake will not release until both brake relays are energized.	No effect.	3
	Contacts (1 of 2)	Close to supply power to MRECT3 in AC portion of brake circuit	Fails Open	West brake will not release when commanded by PLC. Motors will attempt to drive through brake. Delta Tau motion controller will detect following error and send error message to PLC. PLC will disable hoist and set brakes.	No effect.	3

Table 18. **Electrical FMEA - Main Hoist Primary Mode**

System/Subsystem: 325 Ton Bridge Cranes at the Vehicle Assembly Building High Bays 1/2/3/4 / Main Hoist
PMN: H72-1200-01, -02
Drawing No.: EB-2508
Reference Figure: None

Find No. Part No.	Part Name	Part Function	a. Failure Mode b. Cause c. FMN d. Detection Method e. Correcting Action f. Time to Effect g. Timeframe	Failure Effect On System Performance	Failure Effect On Vehicle Systems And/Or Personnel Safety	Crit Cat
			Fails Closed	No effect. Other MBACW contact and MBDCW contacts will open to de-energize brake coil.	No effect.	3
MBDCW	Main Hoist Brake DC West Relay	Energizes when PLC commands brakes to release	Fails De-energized	West brake will not release when commanded by PLC. Motors will attempt to drive through brake. Delta Tau motion controller will detect following error and send error message to PLC. PLC will disable hoist and set brakes.	No effect.	3
			Fails Energized	No effect. West brake will not release until both brake relays are energized.	No effect.	3
	Contacts	Close to supply DC power to Main Hoist West Brake Solenoid	Fails Open	West brake will not release when commanded by PLC. Motors will attempt to drive through brake. Delta Tau motion controller will detect following error and send error message to PLC. PLC will disable hoist and set brakes.	No effect.	3
			Fails Closed	No effect. Other MBDCW contact and MBACW contacts will open to de-energize brake coil.	No effect.	3
O:1,7,A4	PLC Output	Supplies power to energize relays MBACE, MBDCE and PLC Input	Fails De-energized	East brake will not release when commanded by PLC. Motors will attempt to drive through brake. Delta Tau motion controller will detect following error and send error message to PLC. PLC will disable hoist and set brakes.	No effect.	3

Table 18. **Electrical FMEA - Main Hoist Primary Mode**

System/Subsystem: 325 Ton Bridge Cranes at the Vehicle Assembly Building High Bays 1/2/3/4 / Main Hoist
PMN: H72-1200-01, -02
Drawing No.: EB-2508
Reference Figure: None

Find No. Part No.	Part Name	Part Function	a. Failure Mode b. Cause c. FMN d. Detection Method e. Correcting Action f. Time to Effect g. Timeframe	Failure Effect On System Performance	Failure Effect On Vehicle Systems And/Or Personnel Safety	Crit Cat
			Fails Energized	No effect. East brake will not release until both PLC outputs are energized.	No effect.	3
0:1,8,B1 None	PLC Output	Supplies power to energize relays MBACE, MBDCE, and PLC input	Fails De-energized	East brake will not release when commanded by PLC. Motors will attempt to drive through brake. Delta Tau motion controller will detect following error and send error message to PLC. PLC will disable hoist and set brakes.	No effect.	3
			Fails Energized	No effect. East brake will not release until both brake relays are energized.	No effect.	3
MBACE	Main Hoist Brake AC East Relay	Energizes when PLC commands brakes to release	Fails De-energized	East brake will not release when commanded by PLC. Motors will attempt to drive through brake. Delta Tau motion controller will detect following error and send error message to PLC. PLC will disable hoist and set brakes.	No effect.	3
			Fails Energized	No effect. East brake will not release until both brake relays are energized.	No effect.	3
	Contacts (1 of 2)	Close to supply power to MRECT4 in AC portion of brake circuit	Fails Open	East brake will not release when commanded by PLC. Motors will attempt to drive through brake. Delta Tau motion controller will detect following error and send error message to PLC. PLC will disable hoist and set brakes.	No effect.	3

Table 18. **Electrical FMEA - Main Hoist Primary Mode**

System/Subsystem: 325 Ton Bridge Cranes at the Vehicle Assembly Building High Bays 1/2/3/4 / Main Hoist
PMN: H72-1200-01, -02
Drawing No.: EB-2508
Reference Figure: None

Find No. Part No.	Part Name	Part Function	a. Failure Mode b. Cause c. FMN d. Detection Method e. Correcting Action f. Time to Effect g. Timeframe	Failure Effect On System Performance	Failure Effect On Vehicle Systems And/Or Personnel Safety	Crit Cat
			Fails Closed	No effect. Other MBACE contact and MBDCE contacts will open to de-energize brake coil.	No effect.	3
MBDCE	Main Hoist Brake DC East Relay	Energizes when PLC commands brakes to release	Fails De-energized	East brake will not release when commanded by PLC. Motors will attempt to drive through brake. Delta Tau motion controller will detect following error and send error message to PLC. PLC will disable hoist and set brakes.	No effect.	3
			Fails Energized	No effect. East brake will not release until both brake relays are energized.	No effect.	3
	Contacts (1 of 2)	Close to supply DC power to main hoist East brake solenoid	Fails open	East brake will not release when commanded by PLC. Motors will attempt to drive through brake. Delta Tau motion controller will detect following error and send error message to PLC. PLC will disable hoist and set brakes.	No effect.	3
			Fails closed	No effect. Other MBDCE contact and MBACE contacts will open to de-energize brake coil.	No effect.	3
O:1,8,B2	PLC Output	Supplies power to energize relays MBF1 and MBF2	Fails De-energized	PLC will detect relays MBF1 and MBF2 not energized. PLC will disable hoist drives. Brakes will remain set.	No effect.	3

Table 18. **Electrical FMEA - Main Hoist Primary Mode**

System/Subsystem: 325 Ton Bridge Cranes at the Vehicle Assembly Building High Bays 1/2/3/4 / Main Hoist
PMN: H72-1200-01, -02
Drawing No.: EB-2508
Reference Figure: None

Find No. Part No.	Part Name	Part Function	a. Failure Mode b. Cause c. FMN d. Detection Method e. Correcting Action f. Time to Effect g. Timeframe	Failure Effect On System Performance	Failure Effect On Vehicle Systems And/Or Personnel Safety	Crit Cat
			Fails Energized	PLC will detect relays MBF1 and MBF2 are energized continuously. PLC will disable hoist drives, brake will (remain) set.	No effect.	3
MBF1	Main Hoist Brake Forcing Relay	Energizes when PLC commands brakes to release to fully release brakes then de-energizes to set lower holding current	Fails De-energized	Holding current will be applied to release brake. Brake will only partially release or will not release at all. Motors will attempt to drive through brake. Delta Tau motion controller will detect following error and send error message to PLC. PLC will disable hoist and set brakes.	No effect.	3
			Fails Energized	Full current will continuously be applied to brake coil when brakes are released. Continued use will cause brake coil to overheat and be damaged by high current, resulting in brake setting. Motors will attempt to drive through brake. Delta Tau motion controller will detect following error and send error message to PLC. PLC will disable hoist and set brakes.	No effect.	3
	Contacts (1 of 2)	Close to bypass resistor MBR1	Fails Open	Holding current will be applied to release brake. Brake will only partially release or will not release at all. Motors will attempt to drive through brake. Delta Tau motion controller will detect following error and send error message to PLC. PLC will disable hoist and set brakes.	No effect.	3

Table 18. **Electrical FMEA - Main Hoist Primary Mode**

System/Subsystem: 325 Ton Bridge Cranes at the Vehicle Assembly Building High Bays 1/2/3/4 / Main Hoist
PMN: H72-1200-01, -02
Drawing No.: EB-2508
Reference Figure: None

Find No. Part No.	Part Name	Part Function	a. Failure Mode b. Cause c. FMN d. Detection Method e. Correcting Action f. Time to Effect g. Timeframe	Failure Effect On System Performance	Failure Effect On Vehicle Systems And/Or Personnel Safety	Crit Cat
			Fails Closed	No effect. Other MBF1 contact will open to bypass circuit.	No effect.	3
MBF2	Main Hoist Brake Forcing Relay	Energizes when PLC commands brakes to release to fully release brakes then de-energized to set lower holding current	Fails De-energized	Holding current will be applied to release brake. Brake will only partially release or will not release at all. Motors will attempt to drive through brake. Delta Tau motion controller will detect following error and send error message to PLC. PLC will disable hoist and set brakes.	No effect.	3
			Fails Energized	Full current will continuously be applied to brake coil when brakes are released. Continued use will cause brake coil to overheat and be damaged by high current, resulting in brake setting. Motor will attempt to drive through brake. Delta Tau motion controller will detect following error and send error message to PLC. PLC will disable hoist and set brakes.	No effect.	3
	Contacts (1 of 2)	Close to bypass resistor MBR3	Fails Open	Holding current will be applied to release brake. Brake will only partially release or will not release at all. Motors will attempt to drive through brake. Delta Tau motion controller will detect following error and send error message to PLC. PLC will disable hoist and set brakes.	No effect.	3

Table 18. **Electrical FMEA - Main Hoist Primary Mode**

System/Subsystem: 325 Ton Bridge Cranes at the Vehicle Assembly Building High Bays 1/2/3/4 / Main Hoist
PMN: H72-1200-01, -02

Drawing No.: EB-2508
Reference Figure: None

Find No. Part No.	Part Name	Part Function	a. Failure Mode b. Cause c. FMN d. Detection Method e. Correcting Action f. Time to Effect g. Timeframe	Failure Effect On System Performance	Failure Effect On Vehicle Systems And/Or Personnel Safety	Crit Cat
			Fails Closed	No effect. Other MBF1 contact will open to bypass circuit.	No effect.	3
I:2,4,A1	PLC Input	Energizes when brake forcing relays are energized	Fails De-energized	PLC will detect brake forcing has not occurred. PLC will not allow hoist to operate.	No effect.	3
			Fails Energized	PLC will detect that brake forcing relays are continuously energized, disable hoist and set brakes.	No effect.	3
None	Main Hoist Position Display Source Selector Switch	Opens to select west encoder as position display source	Fails Open	Loss of ability to switch from west encoder to East encoder as position display source.	No effect.	3
			Fails Closed	Loss of ability to switch from East encoder to west encoder as position display source.	No effect.	3
GI:05,IN11	PLC Input	Energizes when position display source selector switch is closed selecting East encoder as display source	Fails De-energized	Loss of ability to switch from west encoder to East encoder as position display source.	No effect.	3
			Fails Energized	Loss of ability to switch from East encoder to west encoder as position display source.	No effect.	3
None	Main Hoist Rope Spooling and equalizer travel error override switch	Closes to override error detected by rope spooling and equalizer travel limit switches	Fails Open	Unable to override rope spooling error if an error occurs. Hoist will be disabled and brakes will be set.	No effect.	3

Table 18. **Electrical FMEA - Main Hoist Primary Mode**

System/Subsystem: 325 Ton Bridge Cranes at the Vehicle Assembly Building High Bays 1/2/3/4 / Main Hoist
PMN: H72-1200-01, -02
Drawing No.: EB-2508
Reference Figure: None

Find No. Part No.	Part Name	Part Function	a. Failure Mode b. Cause c. FMN d. Detection Method e. Correcting Action f. Time to Effect g. Timeframe	Failure Effect On System Performance	Failure Effect On Vehicle Systems And/Or Personnel Safety	Crit Cat
			Fails Closed	PLC input will remain energized continuously. If rope spooling error occurs, hoist motion UP will be disabled. Hoist motion DOWN will be enabled to allow operator to back out of rope spooling error.	No effect.	3
GI:05,IN12	PLC Input	Energizes when rope spooling and equalizer travel error override switch is closed	Fails De-energized	Unable to override rope spooling error if an error occurs. Hoist will be disabled and brakes will be set.	No effect.	3
			Fails Energized	PLC input will remain energized continuously. If rope spooling error occurs, hoist motion UP will be disabled. Hoist motion DOWN will be enabled to allow operator to back out of rope spooling error.	No effect.	3
None	Main Hoist Display Reset Push Button	Closes to reset computer generated position display	Fails Open	Unable to zero out hoist position display.	No effect.	3
			Fails Closed	Hoist position display will be stuck in reset mode displaying ---.-- and blanking out the indicator needle. Operator will not be able to continue operation until failure is repaired.	No effect.	3
GI:05,IN13	PLC Input	Energizes when display reset push button is pressed	Fails De-energized	Unable to zero out hoist position display.	No effect.	3

Table 18. **Electrical FMEA - Main Hoist Primary Mode**

System/Subsystem: 325 Ton Bridge Cranes at the Vehicle Assembly Building High Bays 1/2/3/4 / Main Hoist
PMN: H72-1200-01, -02
Drawing No.: EB-2508
Reference Figure: None

Find No. Part No.	Part Name	Part Function	a. Failure Mode b. Cause c. FMN d. Detection Method e. Correcting Action f. Time to Effect g. Timeframe	Failure Effect On System Performance	Failure Effect On Vehicle Systems And/Or Personnel Safety	Crit Cat
			Fails Energized	Hoist position display will be stuck in reset mode displaying ---.-- and blanking out the indicator needle. Operator will not be able to continue operation until failure is repaired.	No effect.	3
O:1,9,C1	PLC Output	Supplies power to main hoist drive imbalance display light on cab console	Fails De-energized	Hoist load imbalance light will not be illuminated when load imbalance occurs. PLC will disable hoist drives and set brakes when imbalance occurs. Requires previous failure to cause imbalance.	No effect.	3
			Fails Energized	Hoist imbalance light will remain illuminated continuously. Hoist will operate normally.	No effect.	3
None	Indicator Light	Illuminates to indicate main hoist has a load imbalance	Fails Open	Hoist load imbalance light will not be illuminated when load imbalance occurs. PLC will disable hoist drives and set brakes when imbalance occurs. Requires previous failure to cause imbalance.	No effect.	3
			Fails Shorted	When load imbalance occurs, current overload will trip circuit Breaker CCB. If hoist imbalance occurs, CCB tripping will cause loss of control power to crane. All drives will be disabled and all brakes will be set.	No effect.	3

Table 18. **Electrical FMEA - Main Hoist Primary Mode**

System/Subsystem: 325 Ton Bridge Cranes at the Vehicle Assembly Building High Bays 1/2/3/4 / Main Hoist
PMN: H72-1200-01, -02
Drawing No.: EB-2508
Reference Figure: None

Find No. Part No.	Part Name	Part Function	a. Failure Mode b. Cause c. FMN d. Detection Method e. Correcting Action f. Time to Effect g. Timeframe	Failure Effect On System Performance	Failure Effect On Vehicle Systems And/Or Personnel Safety	Crit Cat
O:2,2,A2	PLC Output	Supplies power to energize relay MWBS	Fails De-energized	Relay MWBS will not be energized to start hoist blower motor or energize relay MWBR. MWBR contact will open, de-energizing PLC input. PLC will set error bit. PLC will decelerate hoist to stop and set brakes.	No effect.	3
			Fails Energized	No effect. Hoist blower motor will run whenever mainline contactor is closed.	No effect.	3
MWBS	Main Hoist West Blower Starter Relay	Energizes when commanded by PLC and MWBOL switch has not tripped	Fails De-energized	Contacts will not close to start hoist blower motor or energize relay MWBR. MWBR contact will open, de-energizing PLC input. PLC will set error bit. PLC will decelerate hoist to stop and set brakes.	No effect.	3
			Fails Energized	No effect. Hoist blower motor will run whenever mainline contactor is closed.	No effect.	3
	Contacts	Close to supply power to main hoist west blower motor	Fails Open	Contacts will not close to start hoist blower motor or energize relay MWBR. MWBR contact will open, de-energizing PLC input. PLC will set error bit. PLC will decelerate hoist to stop and set brakes.	No effect.	3
			Fails Closed	No effect. Hoist blower motor will run whenever mainline contactor is closed.	No effect.	3

Table 18. **Electrical FMEA - Main Hoist Primary Mode**

System/Subsystem: 325 Ton Bridge Cranes at the Vehicle Assembly Building High Bays 1/2/3/4 / Main Hoist
PMN: H72-1200-01, -02
Drawing No.: EB-2508
Reference Figure: None

Find No. Part No.	Part Name	Part Function	a. Failure Mode b. Cause c. FMN d. Detection Method e. Correcting Action f. Time to Effect g. Timeframe	Failure Effect On System Performance	Failure Effect On Vehicle Systems And/Or Personnel Safety	Crit Cat
O:2,2,A3	PLC Output	Supplies power to energize relay MEBS	Fails De-energized	Relay MEBS will not be energized to start hoist blower motor or energize relay MEBR. MEBR contact will open, de-energizing PLC input. PLC will set error bit. PLC will decelerate hoist to stop and set brakes.	No effect.	3
			Fails Energized	No effect. Hoist blower motor will run whenever mainline contactor is closed.	No effect.	3
MEBS	Main Hoist East Blower Starter Relay	Energizes when commanded by PLC and MEBOL switch has not tripped	Fails De-energized	Contacts will not close to start hoist blower motor or energize relay MEBR. MEBR contact will open, de-energizing PLC input. PLC will set error bit. PLC will decelerate hoist to stop and set brakes.	No effect.	3
			Fails Energized	No effect. Hoist blower motor will run whenever mainline contactor is closed.	No effect.	3
	Contacts	Close to supply power to main hoist East blower motor	Fails Open	Contacts will not close to start hoist blower motor or energize relay MEBR. MEBR contact will open, de-energizing PLC input. PLC will set error bit. PLC will decelerate hoist to stop and set brakes.	No effect.	3
			Fails Closed	No effect. Hoist blower motor will run whenever mainline contactor is closed.	No effect.	3

Table 18. **Electrical FMEA - Main Hoist Primary Mode**

System/Subsystem: 325 Ton Bridge Cranes at the Vehicle Assembly Building High Bays 1/2/3/4 / Main Hoist
PMN: H72-1200-01, -02
Drawing No.: EB-2508
Reference Figure: None

Find No. Part No.	Part Name	Part Function	a. Failure Mode b. Cause c. FMN d. Detection Method e. Correcting Action f. Time to Effect g. Timeframe	Failure Effect On System Performance	Failure Effect On Vehicle Systems And/Or Personnel Safety	Crit Cat
None	Main Hoist Lower Block Weighing System Radio Control Switch	Closes to energize relay MLWS, silencing lower block radio transmitter.	Fails Open	Lower block transmitters will not operate.	No effect.	3
			Fails Closed	Lower block transmitters will operate continuously.	No effect.	3
MLWS	Main Hoist Lower Block Weighing System Relay	De-energizes when silence is selected with radio control switch	Fails De-energized	Lower block transmitters will not operate.	No effect.	3
			Fails Energized	Lower block transmitters will operate continuously.	No effect.	3
	Contact	Closes to supply power to main hoist lower block weighing system	Fails Open	Lower block transmitters will not operate.	No effect.	3
			Fails Closed	Lower block transmitters will operate continuously.	No effect.	3
None	Cruise Control Start Switch	Closes to energize PLC inputs, signaling PLC to start cruise function selected	Fails Open	Cruise function selected will not operate. PLC requires both inputs to be energized to set cruise bit.	No effect.	3
			Fails Closed	Cruise function will not operate until both start inputs are energized and hoist motion has already been initiated.	No effect.	3

Table 18. **Electrical FMEA - Main Hoist Primary Mode**

System/Subsystem: 325 Ton Bridge Cranes at the Vehicle Assembly Building High Bays 1/2/3/4 / Main Hoist
PMN: H72-1200-01, -02
Drawing No.: EB-2508
Reference Figure: None

Find No. Part No.	Part Name	Part Function	a. Failure Mode b. Cause c. FMN d. Detection Method e. Correcting Action f. Time to Effect g. Timeframe	Failure Effect On System Performance	Failure Effect On Vehicle Systems And/Or Personnel Safety	Crit Cat
GI:9,IN15	PLC Input	Energizes when cruise control start push button is pressed.	Fails De-energized	Cruise function selected will not operate. PLC requires both inputs to be energized to set cruise bit.	No effect.	3
			Fails Energized	Cruise function will not operate until both start inputs are energized and hoist motion has already been initiated.	No effect.	3
GI:10,IN15	PLC Input	Energizes when cruise control start push button is pressed	Fails De-energized	Cruise function selected will not operate. PLC requires both inputs to be energized to set cruise bit.	No effect.	3
			Fails Energized	Cruise function will not operate until both start inputs are energized and hoist motion has already been initiated.	No effect.	3
None	Cruise Control Stop Switch	Closes to energize PLC inputs, signaling PLC to stop cruise function operating	Fails Open	Other switch contact will close to energize PLC input, stopping cruise function. Second failure would cause cruise parameter (distance or time to move) to stop hoist motion. Operator can stop hoist motion by switching off control power or pressing E-stop.	No effect.	3
			Fails Closed	Cruise functions will not operate	No effect.	3

Table 18. **Electrical FMEA - Main Hoist Primary Mode**

System/Subsystem: 325 Ton Bridge Cranes at the Vehicle Assembly Building High Bays 1/2/3/4 / Main Hoist
PMN: H72-1200-01, -02
Drawing No.: EB-2508
Reference Figure: None

Find No. Part No.	Part Name	Part Function	a. Failure Mode b. Cause c. FMN d. Detection Method e. Correcting Action f. Time to Effect g. Timeframe	Failure Effect On System Performance	Failure Effect On Vehicle Systems And/Or Personnel Safety	Crit Cat
GI:9,IN16	PLC Input	Energizes when cruise control stop push button is pressed	Fails De-energized	Other PLC input will be energized, stopping cruise function. Second failure would cause cruise parameter (distance or time to move) to stop hoist motion. Operator can stop hoist motion by switching off control power or pressing E-stop.	No effect.	3
			Fails Energized	Cruise functions will not operate	No effect.	3
GI:10,IN16	PLC Input	Energizes when cruise control stop push button is pressed	Fails De-energized	Other PLC input will be energized, stopping cruise function. Second failure would cause cruise parameter (distance or time to move) to stop hoist motion. Operator can stop hoist motion by switching off control power or pressing E-stop.	No effect.	3
			Fails Energized	Cruise functions will not operate	No effect.	3
None	Main Hoist Drive Selector Switch	Closes to energize PLC inputs, signaling PLC enable selected drive(s)	Fails Open	PLC will detect drive select switch does not match circuit Breaker. Hoist drives will be disabled and brakes will be set.	No effect.	3
			Fails Closed	Will cause encoder compare fault or will cause PLC fault in single drive operation. PLC will disable drives and brakes will be set.	No effect.	3
I:2,5,C5	PLC Input	Energizes when main hoist west drive only is selected	Fails De-energized	Will cause PLC fault. PLC will disable drive and brakes will be set.	No effect.	3

Table 18. **Electrical FMEA - Main Hoist Primary Mode**

System/Subsystem: 325 Ton Bridge Cranes at the Vehicle Assembly Building High Bays 1/2/3/4 / Main Hoist
PMN: H72-1200-01, -02
Drawing No.: EB-2508
Reference Figure: None

Find No. Part No.	Part Name	Part Function	a. Failure Mode b. Cause c. FMN d. Detection Method e. Correcting Action f. Time to Effect g. Timeframe	Failure Effect On System Performance	Failure Effect On Vehicle Systems And/Or Personnel Safety	Crit Cat
			Fails Energized	Will cause PLC fault during East drive only operation. PLC will disable drives and brakes will be set.	No effect.	3
I:2,5,C6	PLC Input	Energizes when both main hoist drives are selected	Fails De-energized	PLC will detect drive select switch does not match circuit Breaker. Hoist drives will be disabled and brakes will be set.	No effect.	3
			Fails Energized	Will cause encoder compare fault or will cause PLC fault in single drive operation. PLC will disable drives and brakes will be set.	No effect.	3
I:2,5,C7	PLC Input	Energizes when main hoist East drive only is selected	Fails De-energized	Will cause PLC fault. PLC will disable drive and brakes will be set.	No effect.	3
			Fails Energized	Will cause PLC fault during west drive only operation. PLC will disable drives and brakes will be set.	No effect.	3
MBFU1 MBFU2	Fuse	Protects upstream circuitry from overloads in main hoist brake circuit	Prematurely Operates	Loss of power to brake coil circuit. Brakes will (remain) set. Hoist will attempt to drive through brakes. Will cause Delta Tau to detect following error or excessive accel / decel, disabling drives. Operator can detect audible setting of hoist brakes and excessive current for hoist motors indicated on control cab ammeters.	No effect.	3

Table 18. **Electrical FMEA - Main Hoist Primary Mode**

System/Subsystem: 325 Ton Bridge Cranes at the Vehicle Assembly Building High Bays 1/2/3/4 / Main Hoist
PMN: H72-1200-01, -02
Drawing No.: EB-2508
Reference Figure: None

Find No. Part No.	Part Name	Part Function	a. Failure Mode b. Cause c. FMN d. Detection Method e. Correcting Action f. Time to Effect g. Timeframe	Failure Effect On System Performance	Failure Effect On Vehicle Systems And/Or Personnel Safety	Crit Cat
			Fails to Operate	Opposite fuse will protect circuitry from overloads. Requires previous failure to cause overload. Will result in brakes setting.	No effect.	3
MBT	Main Hoist Brake Transformer	Converts 480 VAC to 240 VAC for Main Hoist Brake Circuit	Fails Open	Loss of power to brake coil circuit. Brakes will (remain) set. Hoist will attempt to drive through brakes. PLC will detect load imbalance or Delta Tau board will detect following error or excessive accel / decel, disabling drives. Operator can detect audible setting of hoist brakes and excessive current for hoist motors indicated on control cab console ammeters.	No effect.	3
			Fails Shorted	MBFU1 and MBFU2 will protect circuitry from overload. Will result in brakes setting.	No effect.	3
MBFU3, MBFU4	Fuse	Protects upstream circuitry from overloads in main hoist brake circuit	Prematurely Operates	Loss of power to one hoist brake coil causing single brake to set. Motors will attempt to drive through brake. PLC will detect load imbalance between motors due to added resistance to one drive train or PLC will detect error between encoders when opposite motor takes up backlash is the drive system.	No effect.	3

Table 18. **Electrical FMEA - Main Hoist Primary Mode**

System/Subsystem: 325 Ton Bridge Cranes at the Vehicle Assembly Building High Bays 1/2/3/4 / Main Hoist
PMN: H72-1200-01, -02
Drawing No.: EB-2508
Reference Figure: None

Find No. Part No.	Part Name	Part Function	a. Failure Mode b. Cause c. FMN d. Detection Method e. Correcting Action f. Time to Effect g. Timeframe	Failure Effect On System Performance	Failure Effect On Vehicle Systems And/Or Personnel Safety	Crit Cat
			Fails to Operate	MBFU1 and MBFU2 will protect circuitry against overloads. Requires previous failure to cause overload. Will result in loss of power to brake coil circuit. Brakes will (remain) set. Hoist will attempt to drive through brakes. PLC will detect load imbalance or Delta Tau board will detect following error or excessive accel / decel, disabling drives. Operator can detect audible setting of hoist brakes and excessive current for hoist motors indicated on control cab console ammeters.	No effect.	3
MMOV1 MMOV2	Main Hoist Metal Oxide Varistor	Becomes an electrical short when voltage exceeds a set level	Fails Open	Loss of overvoltage protection to brake coil circuit. Overvoltage condition can cause damage of circuit and loss of power to one hoist brake coil causing single brake to set. Motors will attempt to drive through brake. PLC will detect load imbalance between motors due to added resistance to one drive train or PLC will detect error between encoders when opposite motor takes up backlash in the drive system.	No effect.	3

Table 18. **Electrical FMEA - Main Hoist Primary Mode**

System/Subsystem: 325 Ton Bridge Cranes at the Vehicle Assembly Building High Bays 1/2/3/4 / Main Hoist
PMN: H72-1200-01, -02
Drawing No.: EB-2508
Reference Figure: None

Find No. Part No.	Part Name	Part Function	a. Failure Mode b. Cause c. FMN d. Detection Method e. Correcting Action f. Time to Effect g. Timeframe	Failure Effect On System Performance	Failure Effect On Vehicle Systems And/Or Personnel Safety	Crit Cat
			Fails Shorted	MBFU3 or MBFU4 will blow when current overload occurs leading to loss of power to one hoist brake coil causing single brake to set. Motors will attempt to drive through brake. PLC will detect load imbalance between motors due to added resistance to one drive train or PLC will detect error between encoders when opposite motor takes up backlash in the drive system.	No effect.	3
MRECT3, MRECT4	Main Hoist Rectifier	Converts AC electrical power to DC electrical power	Fails Open	Loss of power to one hoist brake coil causing single brake to set. Motors will attempt to drive through brake. PLC will detect load imbalance between motors due to added resistance to one drive train or PLC will detect error between encoders when opposite motor takes up backlash in the drive system.	No effect.	3
			Fails Shorted	MBFU3 or MBFU4 will blow when current overload occurs leading to loss of power to one hoist brake coil causing single brake to set. Motors will attempt to drive through brake. PLC will detect load imbalance between motors due to added resistance to one drive train or PLC will detect error between encoders when opposite motor takes up backlash in the drive system.	No effect.	3

Table 18. **Electrical FMEA - Main Hoist Primary Mode**

System/Subsystem: 325 Ton Bridge Cranes at the Vehicle Assembly Building High Bays 1/2/3/4 / Main Hoist
PMN: H72-1200-01, -02
Drawing No.: EB-2508
Reference Figure: None

Find No. Part No.	Part Name	Part Function	a. Failure Mode b. Cause c. FMN d. Detection Method e. Correcting Action f. Time to Effect g. Timeframe	Failure Effect On System Performance	Failure Effect On Vehicle Systems And/Or Personnel Safety	Crit Cat
MBR1, MBR3	Main Hoist Brake Resistor	Limits current flow in DC loop of brake circuit, setting holding current of brake solenoid	Fails Open	Brakes will initially release when commanded but one brake set when brake forcing timer times out. Motors will attempt to drive through brake. PLC will detect load imbalance between motors due to added resistance to one drive train or PLC will detect error between encoders when opposite motor takes up backlash in the drive system.	No effect.	3
			Fails Shorted	Full current will continuously be applied to brake coil when brakes are released. Continued use will cause brake coil to overheat and be damaged by high current, resulting in brake setting. Motors will attempt to drive through brake, PLC will detect load imbalance between motors due to added resistance to one drive train or PLC will detect error between encoders when East motor takes up backlash in the drive system.	No effect.	3
MBR2, MBR4 None	Main Hoist Brake Resistor	Limits current flow in DC loop of brake circuit, setting holding current of brake solenoid	Fails Open	Associated single brake will not release when commanded. Motors will attempt to drive through brake, PLC will detect load imbalance between motors due to added resistance to one drive train or PLC will detect error between encoders when East motor takes up backlash in the drive system.	No effect.	3

Table 18. **Electrical FMEA - Main Hoist Primary Mode**

System/Subsystem: 325 Ton Bridge Cranes at the Vehicle Assembly Building High Bays 1/2/3/4 / Main Hoist
PMN: H72-1200-01, -02
Drawing No.: EB-2508
Reference Figure: None

Find No. Part No.	Part Name	Part Function	a. Failure Mode b. Cause c. FMN d. Detection Method e. Correcting Action f. Time to Effect g. Timeframe	Failure Effect On System Performance	Failure Effect On Vehicle Systems And/Or Personnel Safety	Crit Cat
			Fails Shorted	Excessive current flow will cause MBFU3 or MBFU4 to blow, associated brake will (remain) set. Motors will attempt to drive through brake, PLC will detect load imbalance between motors due to added resistance to one drive train or PLC will detect error between encoders when East motor takes up backlash in the drive system.	No effect.	3
None	Main hoist Brake Solenoid East, West	Generates magnetic field to actuate main hoist brake mechanism	Fails Open	Associated single brake mechanism will (remain) set. Motors will attempt to drive through brake. PLC will detect load imbalance between motors due to added resistance to one drive train or PLC will detect error between encoders when west motor takes up backlash in the drive system.	No effect.	3
			Fails Shorted	MBR1, 2 or MBR3,4 will limit current through brake circuit. Failed brake will not release. Motors will attempt to drive through brake. PLC will detect load imbalance between motors due to added resistance to one drive train or PLC will detect error between encoders when East motor takes up backlash in the drive system.	No effect.	3
None	West Motor Warning Thermistor	Provides variable resistance proportional to motor temperature	Fails Open	Motor overtemp warning on continuously	No effect.	3

Table 18. **Electrical FMEA - Main Hoist Primary Mode**

System/Subsystem: 325 Ton Bridge Cranes at the Vehicle Assembly Building High Bays 1/2/3/4 / Main Hoist
PMN: H72-1200-01, -02
Drawing No.: EB-2508
Reference Figure: None

Find No. Part No.	Part Name	Part Function	a. Failure Mode b. Cause c. FMN d. Detection Method e. Correcting Action f. Time to Effect g. Timeframe	Failure Effect On System Performance	Failure Effect On Vehicle Systems And/Or Personnel Safety	Crit Cat
			Fails Shorted	Loss of motor overtemp warning. Motor overtemp shutdown will disable drive if overtemp occurs.	No effect.	3
MWMTW	Motogard Overtemp Module	Energize PLC Input when overtemp is detected in Hoist motor	Fails Low or No output	Loss of overtemp warning. Motor overtemp shut down will disable drive if overtemp occurs.	No effect.	3
			Fails High Output	Overtemp warning light will remain on continuously.	No effect.	3
None	Overtemp Warning Light	Indicates an above normal operating temperature in main hoist west motor	Fails Open	Loss of overtemp warning. Motor overtemp shut down will disable drive if overtemp occurs.	No effect.	3
			Fails Shorted	When overtemp occurs, current overload will blow FU12. Main hoist west drive will be disabled.	No effect.	3
None	West Motor Shut Down Thermistor	Provides variable resistance proportional to motor temperature	Fails Open	Overtemp shutdown module will energized PLC input. PLC will disable main hoist west drive.	No effect.	3
			Fails Shorted	Loss of automatic motor overtemp shutdown. Overtemp warning light will warn of overtemp condition in motor.	No effect.	3
MWMTS	Motogard Overtemp Module	Energize PLC input when overtemp is detected in hoist motor	Fails Low or No Output	Loss of automatic motor overtemp shutdown. Overtemp warning light will warn of overtemp condition in motor.	No effect.	3
			Fails High Output	PLC input will be energized. PLC will disable hoist drive.	No effect.	3

Table 18. **Electrical FMEA - Main Hoist Primary Mode**

System/Subsystem: 325 Ton Bridge Cranes at the Vehicle Assembly Building High Bays 1/2/3/4 / Main Hoist
PMN: H72-1200-01, -02
Drawing No.: EB-2508
Reference Figure: None

Find No. Part No.	Part Name	Part Function	a. Failure Mode b. Cause c. FMN d. Detection Method e. Correcting Action f. Time to Effect g. Timeframe	Failure Effect On System Performance	Failure Effect On Vehicle Systems And/Or Personnel Safety	Crit Cat
I:2,3,A7	PLC Input	Energized by MWMTS when an overtemp condition occurs in main hoist west motor	Fails De-energized	Loss of automatic motor overtemp shutdown. Overtemp warning light will warn of overtemp condition in motor.	No effect.	3
			Fails Energized	PLC will disable hoist drive although an overtemp condition does not exist.	No effect.	3
GO:11,07	PLC Output	Sends power to main hoist west motor overtemp indication light when overtemp occurs or indicator lights are tested	Fails De-energized	Loss of motor overtemp shutdown indication. PLC will disable hoist drive.	No effect.	3
			Fails Energized	Main hoist west motor overtemp indication light will remain illuminated continuously.	No effect.	3
None	Overtemp Shutdown Light	Indicates an above normal operating temperature in main hoist west motor and hoist drive have been disabled.	Fails Open	Loss of overtemp shutdown indication. Hoist drive will be disabled.	No effect.	3
			Fails Shorted	When overtemp occurs, current overload will blow FU12. Hoist drive will be disabled.	No effect.	3
None	West Motor Warning Thermistor	Provides variable resistance proportional to motor temperature	Fails Open	Motor overtemp warning on continuously	No effect.	3

Table 18. **Electrical FMEA - Main Hoist Primary Mode**

System/Subsystem: 325 Ton Bridge Cranes at the Vehicle Assembly Building High Bays 1/2/3/4 / Main Hoist
PMN: H72-1200-01, -02
Drawing No.: EB-2508
Reference Figure: None

Find No. Part No.	Part Name	Part Function	a. Failure Mode b. Cause c. FMN d. Detection Method e. Correcting Action f. Time to Effect g. Timeframe	Failure Effect On System Performance	Failure Effect On Vehicle Systems And/Or Personnel Safety	Crit Cat
			Fails Shorted	Loss of motor overtemp warning. Motor overtemp shutdown will disable drive if overtemp occurs.	No effect.	3
MEMTW	Motogard Overtemp Module	Supplies power to main hoist East overtemp warning light when an above normal motor temperature is detected	Fails Low or No Output	Loss of overtemp warning. Motor overtemp shutdown will disable drive if overtemp occurs.	No effect.	3
			Fails High Output	Overtemp warning light will remain on continuously.	No effect.	3
None	Overtemp Warning Light	Indicates an above normal operating temperature in main hoist East motor	Fails Open	Loss of overtemp warning. Motor overtemp shutdown will disable drive if overtemp occurs.	No effect.	3
			Fails Shorted	When overtemp occurs, current overload will blow FU12. Main hoist drive will be disabled.	No effect.	3
None	East Motor Shutdown Thermistor	Provides variable resistance proportional to motor temperature	Fails Open	Overtemp shutdown module will energized PLC input. PLC will disable hoist drive.	No effect.	3
			Fails Shorted	Loss of automatic motor overtemp shutdown. Overtemp warning light will warn of overtemp condition in motor.	No effect.	3
MEMTS	Motogard Overtemp Module	Energize PLC input when overtemp is detected in main hoist East motor	Fails Low or No Output	Loss of automatic motor overtemp shutdown. Overtemp warning light will warn of overtemp condition in motor.	No effect.	3

Table 18. **Electrical FMEA - Main Hoist Primary Mode**

System/Subsystem: 325 Ton Bridge Cranes at the Vehicle Assembly Building High Bays 1/2/3/4 / Main Hoist
PMN: H72-1200-01, -02
Drawing No.: EB-2508
Reference Figure: None

Find No. Part No.	Part Name	Part Function	a. Failure Mode b. Cause c. FMN d. Detection Method e. Correcting Action f. Time to Effect g. Timeframe	Failure Effect On System Performance	Failure Effect On Vehicle Systems And/Or Personnel Safety	Crit Cat
			Fails High Output	PLC input will be energized. PLC will disable hoist drive.	No effect.	3
I:2,3,A8	PLC Input	Energized by MEMTS when an overtemp condition occurs in main hoist East motor	Fails De-energized	Loss of automatic motor overtemp shutdown. Overtemp warning light will warn of overtemp condition in motor.	No effect.	3
			Fails Energized	PLC will disable hoist drive although an overtemp condition does not exist.	No effect.	3
GO:11,08	PLC Output	Sends power to main hoist East motor overtemp indication light when overtemp occurs or indicator lights are tested	Fails De-energized	Loss of motor overtemp shutdown indication. PLC will disable hoist drive.	No effect.	3
			Fails Energized	Main hoist west motor overtemp indication light will remain illuminated continuously.	No effect.	3
None	Overtemp Shutdown light	Indicates an above normal operating temperature in main hoist East motor and hoist drive have been disabled	Fails Open	Loss of overtemp shutdown indication. Hoist drive will be disabled.	No effect.	3
			Fails Shorted	When overtemp occurs, current overload will blow FU12. Hoist drive will be disabled.	No effect.	3

Table 18. **Electrical FMEA - Main Hoist Primary Mode**

System/Subsystem: 325 Ton Bridge Cranes at the Vehicle Assembly Building High Bays 1/2/3/4 / Main Hoist
PMN: H72-1200-01, -02
Drawing No.: EB-2508
Reference Figure: None

Find No. Part No.	Part Name	Part Function	a. Failure Mode b. Cause c. FMN d. Detection Method e. Correcting Action f. Time to Effect g. Timeframe	Failure Effect On System Performance	Failure Effect On Vehicle Systems And/Or Personnel Safety	Crit Cat
MWSRA	Scaling Resistor Assembly	Scale voltage from fault resistors to conform to MWFSA circuitry	Fails Open	Voltage imbalance will be detected by MWFSA. MWFSA will disable MWMCM and de-energize relays MWRDY and MWFRDY.	No effect.	3
			Fails Shorted	Voltage imbalance will be detected by MWFSA. MWFSA will disable MWMCM and de-energize relays MWRDY and MWFRDY.	No effect.	3
MWSRA	Main hoist west fault sense assembly	Monitor main hoist west motor control module current balance, disabling MWMCM if imbalance occurs				
	J1-6	Provide ground for relays MWRDY and MWFRDY	Fails High	Relays MWRDY and MWFRDY will not energize. Hoist drive will be disabled. Brakes will set.	No effect.	3
			Fails Low	Relays MWRDY and MWFRDY will remain energized. Relays MWFSA and MWDE will disable MWMCM. Brakes will set.	No effect.	3
	J2-12	Provide enable signal for MWMCM	Fails High	Relay MWDE and PLC output will disable MWMCM. Brakes will set.	No effect.	3
			Fails Low	MWMCM will not be enabled. Drive will not operate. Torque will not be proved. Brakes will remain set.	No effect.	3

Table 18. **Electrical FMEA - Main Hoist Primary Mode**

System/Subsystem: 325 Ton Bridge Cranes at the Vehicle Assembly Building High Bays 1/2/3/4 / Main Hoist
PMN: H72-1200-01, -02
Drawing No.: EB-2508
Reference Figure: None

Find No. Part No.	Part Name	Part Function	a. Failure Mode b. Cause c. FMN d. Detection Method e. Correcting Action f. Time to Effect g. Timeframe	Failure Effect On System Performance	Failure Effect On Vehicle Systems And/Or Personnel Safety	Crit Cat
	J2-5	Provide power for sensing contacts of relay MWDC	Fails Low or No Output	MWFSA will sense that MWDC contact did not close even though it did. MWFSA will not enable MWMCM or provide ground for relays MWRDY and MWFRDY. Hoist will not operate.	No effect.	3
	J2-6	Input from sensing contacts of relay MWDC	Fails Low	MWFSA will sense that MWDC contact did not close even though it did. MWFSA will not enable MWMCM or provide ground for relays MWRDY and MWFRDY. Hoist will not operate.	No effect.	3
			Fails High	Relay MWDE and PLC output will disable MWMCM. Brakes will set.	No effect.	3
MWRDY	Relay	Energizes when MWMCM is ready and MWFSA J1-6 goes low	Fails D-energized	Relay MWDE, MWDC and PLC input will not be energized to complete DC motor armature loop. Hoist drive will not operate.	No effect.	3
			Fails Energized	MWMCM J1-20 goes high when fault occurs, de-energizing relay MWFLT. MWFLT will de-energize relay MWDE, MWDC and PLC input. Hoist drive will be disabled and brakes will set.	No effect.	3
	Contact	Closes to energize relay MWDC circuit	Fails Open	Relay MWDC will not be energized. MWDC contact will prevent MWMCM from being enabled. Hoist will not operate.	No effect.	3

Table 18. **Electrical FMEA - Main Hoist Primary Mode**

System/Subsystem: 325 Ton Bridge Cranes at the Vehicle Assembly Building High Bays 1/2/3/4 / Main Hoist
PMN: H72-1200-01, -02
Drawing No.: EB-2508
Reference Figure: None

Find No. Part No.	Part Name	Part Function	a. Failure Mode b. Cause c. FMN d. Detection Method e. Correcting Action f. Time to Effect g. Timeframe	Failure Effect On System Performance	Failure Effect On Vehicle Systems And/Or Personnel Safety	Crit Cat
			Fails Closed	Other MWRDY contact will De-energize relay MWDE which will de-energize relay MWDC. MWMCM will be disabled. Hoist drive will not operate.	No effect.	3
	Contact	Closes to energize relay MWDE	Fails Open	Main Hoist west drive enable relay will not energize. MWMCM will not be enabled. Hoist drive will not operate.	No effect.	3
			Fails Closed	No effect. Main hoist west drive enable relay will not energize until commanded by PLC and other MWRDY contact will de-energize relay MWDC, disabling MWMCM. PLC will detect load imbalance or torque proving failure, disable drives and set brakes.	No effect.	3
MWFRDY	Relay	Energizes when MWMCM is ready and MWFSA J1-6 goes low	Fails De-energized	Relay MWDC will not be energized. MWMCM will be disabled. PLC will detect load imbalance or torque proving failure and disable drives and set brakes.	No effect.	3
			Fails Energized	Relay MWRDY will de-energize relay MWDC. MERDY contact will be damaged by high back EMF from coil of relay MWDC.	No effect.	3
	Contact	Closes to bypass R-C portion of MWDC circuit	Fails Open	Relay MWDC will not be energized. MWMCM will be disabled. PLC will detect load imbalance or torque proving failure and disable drives and set brakes.	No effect.	3

Table 18. **Electrical FMEA - Main Hoist Primary Mode**

System/Subsystem: 325 Ton Bridge Cranes at the Vehicle Assembly Building High Bays 1/2/3/4 / Main Hoist
PMN: H72-1200-01, -02
Drawing No.: EB-2508
Reference Figure: None

Find No. Part No.	Part Name	Part Function	a. Failure Mode b. Cause c. FMN d. Detection Method e. Correcting Action f. Time to Effect g. Timeframe	Failure Effect On System Performance	Failure Effect On Vehicle Systems And/Or Personnel Safety	Crit Cat
			Fails Closed	Relay MWRDY will de-energize relay MWDC. MWRDY contact will be damaged by high back EMF from coil of relay MWDC.	No effect.	3
AO:00,08,01	PLC Output	Analog input to MWMCM to set current for torque proving	Fails High	Motor control module will not use Aux. current reference until input J2-8 is energized. High current command will cause motor to drive through brake causing motion error. Delta Tau will detect uncommanded motion and signal PLC. PLC will disable drives.	No effect.	3
			Fails Low or No output	Current command will not be sufficient to prove torque. PLC will not enable hoist motion due to torque proving failure.	No effect.	3
None	Resistor 20K ohm	Prevent PLC output from “floating” when an output is not being provided by the PLC	Fails Open	No effect. Motor control module will not use Aux. current reference until PLC energizes input J2-8.	No effect.	3
			Fails Shorted	Motor control module will receive an Aux. current command of zero. Torque will not be proved. PLC will not allow hoist operation.	No effect.	3

Table 18. **Electrical FMEA - Main Hoist Primary Mode**

System/Subsystem: 325 Ton Bridge Cranes at the Vehicle Assembly Building High Bays 1/2/3/4 / Main Hoist
PMN: H72-1200-01, -02
Drawing No.: EB-2508
Reference Figure: None

Find No. Part No.	Part Name	Part Function	a. Failure Mode b. Cause c. FMN d. Detection Method e. Correcting Action f. Time to Effect g. Timeframe	Failure Effect On System Performance	Failure Effect On Vehicle Systems And/Or Personnel Safety	Crit Cat
AI:01,07,I1	PLC Input	Monitors analog input (Aux. current reference for torque proving) to MWMCM	Fails High	Motor control module will not use Aux. current reference until input J2-8 is energized. High current command will cause motor to drive through brake causing motion error. Delta Tau will detect uncommanded motion and signal PLC. PLC will disable drives.	No effect.	3
			Fails Low or No Output	PLC will interpret as a torque proving failure and will not enable hoist motion.	No effect.	3
AI:02,06,I1	PLC Input	Monitors DC current reference input from Delta Tau motion controller	Fails High	PLC will interpret as too high of a current. PLC will disable hoist drive and set brakes.	No effect.	3
			Fails Low or No output	PLC will interpret as too low of a current. PLC will disable hoist drive and set brakes.	No effect.	3
None	Resistor 10K ohms	Prevent PLC output (AO:00,08,01) from “floating” when an output is not being provided by PLC	Fails Shorted	No effect. Motor control module will not use Aux. current reference until PLC energizes input J2-8.	No effect.	3
			Fails Open	Motor control module will receive an Aux. current of zero. Torque will not be proved. PLC will not allow hoist operation.	No effect.	3

Table 18. **Electrical FMEA - Main Hoist Primary Mode**

System/Subsystem: 325 Ton Bridge Cranes at the Vehicle Assembly Building High Bays 1/2/3/4 / Main Hoist
PMN: H72-1200-01, -02
Drawing No.: EB-2508
Reference Figure: None

Find No. Part No.	Part Name	Part Function	a. Failure Mode b. Cause c. FMN d. Detection Method e. Correcting Action f. Time to Effect g. Timeframe	Failure Effect On System Performance	Failure Effect On Vehicle Systems And/Or Personnel Safety	Crit Cat
None	Resistor 10K ohms	Prevent PLC output (AO:00,08,01) from "floating" when an output is not being provided by PLC	Fails Shorted	No effect. Motor control module will not use Aux. current reference until PLC energizes input J2-8.	No effect.	3
			Fails Open	Motor control module will receive an Aux. current command of zero. Torque will not be proved. PLC will not allow hoist operation.	No effect.	3
MWFLT	Main Hoist West Fault Relay	Energizes when MWMCM J1-20 goes low, signaling MWMCM has a fault	Fails De-energized	Relay MWFLT will indicate a fault exists in the MWMCM when a fault does not exist. Relays MWDE, MWDC and PLC input will be de-energized. Hoist drive will be disabled and brakes will set.	No effect.	3
			Fails Energized	MWMCM J2-15 will go low when fault occurs, de-energizing relays MWRDY and MWFRDY. MWRDY will de-energize relay MWDE, MWDC and PLC input. Hoist drive will be disabled and brake will set.	No effect.	3
	Contact	Closes to energize relay MWDE	Fails open	Main hoist west drive enable relay will not energize. MWMCM will not be enabled. Hoist drive will not operate.	No effect.	3
			Fails closed	MWMCM J2-15 will go low when fault occurs, de-energizing relay MWRDY and MWFRDY. MWRDY will de-energize relay MWDE, MWDC and PLC input. Hoist drive will be disabled and brake will set.	No effect.	3

Table 18. **Electrical FMEA - Main Hoist Primary Mode**

System/Subsystem: 325 Ton Bridge Cranes at the Vehicle Assembly Building High Bays 1/2/3/4 / Main Hoist
PMN: H72-1200-01, -02
Drawing No.: EB-2508
Reference Figure: None

Find No. Part No.	Part Name	Part Function	a. Failure Mode b. Cause c. FMN d. Detection Method e. Correcting Action f. Time to Effect g. Timeframe	Failure Effect On System Performance	Failure Effect On Vehicle Systems And/Or Personnel Safety	Crit Cat
O;1,5,A1	PLC Output	Energizes input J2-6, Run, of MWMCM	Fails De-energized	MWMCM circuitry will not be enabled. Hoist drive will not operate.	No effect.	3
			Fails Energized	Delta Tau motion controller will command MWMCM to maintain zero speed. Brakes will set.	No effect.	3
O:1,5,A2	PLC Output	Energizes input J2-8, Aux. torque enable, of MWMCM for torque proving	Fails De-energized	Motor control module will not send current through armature of motor to prove torque. PLC will disable hoist for torque proving failure.	No effect.	3
			Fails Energized	Motor control module will continue to use Aux. current reference to run motor. PLC will detect load imbalance and disable hoist and set brakes. Delta Tau motion controller will detect following error and signal PLC to disable drives and set brakes.	No effect.	3
I:1,4,A1	PLC Input	De-energizes when west SCR overtemp sensor contacts open	Fails De-energized	PLC will detect SCR overtemp even though an overtemp condition does not exist. PLC will disable drives and set brakes.	No effect.	3

Table 18. **Electrical FMEA - Main Hoist Primary Mode**

System/Subsystem: 325 Ton Bridge Cranes at the Vehicle Assembly Building High Bays 1/2/3/4 / Main Hoist
PMN: H72-1200-01, -02
Drawing No.: EB-2508
Reference Figure: None

Find No. Part No.	Part Name	Part Function	a. Failure Mode b. Cause c. FMN d. Detection Method e. Correcting Action f. Time to Effect g. Timeframe	Failure Effect On System Performance	Failure Effect On Vehicle Systems And/Or Personnel Safety	Crit Cat
			Fails Energized	MWMCM input J2-11 will signal that SCR overtemp has occurred. MWMCM will be disabled and ready signal will be removed, de-energizing relays MWRDY and MWFRDY which will de-energize relay MWDE and MWDC. PLC will detect drive not enabled and set brakes.	No effect.	3
WSCR OT	West SCR Over temperature Sensor	Contact opens when temperature of west SCRs exceeds a set value	Fails Open	PLC will detect SCR overtemp even though an overtemp condition does not exist. PLC will disable drives and set brakes.	No effect.	3
			Fails Closed	Loss of SCR overheat protection. Loss of SCR will cause phase imbalance at motor control module inputs which will be detected by MWFSA. MWFSA will disable drive. PLC will detect disabled drive and set brakes.	No effect.	3
MWMCM (continued)	Main Hoist West Motor Control Module	Provides primary armature and field control of main hoist west motor				
	J1-8,9	DC current reference input from Delta Tau motion controller	Fails Low	MWMCM will provide too low of a current to achieve or maintain speed commanded. Delta Tau motion controller will detect following error. PLC will shut down hoist drive and set brakes. PLC will detect load imbalance and disable drives and set brakes.	No effect.	3

Table 18. **Electrical FMEA - Main Hoist Primary Mode**

System/Subsystem: 325 Ton Bridge Cranes at the Vehicle Assembly Building High Bays 1/2/3/4 / Main Hoist
PMN: H72-1200-01, -02
Drawing No.: EB-2508
Reference Figure: None

Find No. Part No.	Part Name	Part Function	a. Failure Mode b. Cause c. FMN d. Detection Method e. Correcting Action f. Time to Effect g. Timeframe	Failure Effect On System Performance	Failure Effect On Vehicle Systems And/Or Personnel Safety	Crit Cat
			Fails High	MWMCM will provide too high of a current to achieve or maintain speed commanded. Delta Tau motion controller will detect following error. PLC will shut down hoist drive and set brakes. PLC will detect load imbalance and disable drives and set brakes.	No effect.	3
	J1-12	Auxiliary current reference input from PLC	Fails High	Motor control module will not use Aux. current reference until input J2-8 is energized. High current command will cause motor to drive through brake causing motion error. Delta Tau will detect uncommanded motion and signal PLC. PLC will disable drives.	No effect.	3
			Fails low or No Output	Current command will not be sufficient to prove torque. PLC will not enable hoist motion due to torque proving failure.	No effect.	3
	J1-14	+15 volts DC output for main hoist west fault sense assembly	Fails Low	Voltage offset will cause imbalance in MWFSA comparators. MWFSA will indicate a fault has occurred and disable MWMCM. MWMCM will de-energize relay MWFLT and MWRDY causing PLC to disable drive and set brakes.	No effect.	3

Table 18. **Electrical FMEA - Main Hoist Primary Mode**

System/Subsystem: 325 Ton Bridge Cranes at the Vehicle Assembly Building High Bays 1/2/3/4 / Main Hoist
PMN: H72-1200-01, -02
Drawing No.: EB-2508
Reference Figure: None

Find No. Part No.	Part Name	Part Function	a. Failure Mode b. Cause c. FMN d. Detection Method e. Correcting Action f. Time to Effect g. Timeframe	Failure Effect On System Performance	Failure Effect On Vehicle Systems And/Or Personnel Safety	Crit Cat
			Fails High	Voltage offset will cause imbalance in MWFSA comparators. MWFSA will indicate a fault has occurred and disable MWMCM. MWMCM will de-energize relays MWFLT and MWRDY causing PLC to disable drive and set brakes.	No effect.	3
	J1-17	-15 volts DC output for main hoist west fault sense assembly	Fails Low	Voltage offset will cause imbalance in MWFSA comparators. MWFSA will indicate a fault has occurred and disable MWMCM. MWMCM will de-energize relays MWFLT and MWRDY causing PLC to disable drive and set brakes.	No effect.	3
			Fails High	Voltage offset will cause imbalance in MWFSA comparators. MWFSA will indicate a fault has occurred and disable MWMCM. MWMCM will de-energize relays MWFLT and MWRDY causing PLC to disable drive and set brakes.	No effect.	3
	J1-20	Motor control fault output	Fails Low	MWMCM J2-15 will go low when fault occurs, de-energizing relay MWRDY. MWRDY will de-energize relay MWDE, MWDC and PLC input. Hoist drive will be disabled and brake will set.	No effect.	3

Table 18. **Electrical FMEA - Main Hoist Primary Mode**

System/Subsystem: 325 Ton Bridge Cranes at the Vehicle Assembly Building High Bays 1/2/3/4 / Main Hoist
PMN: H72-1200-01, -02
Drawing No.: EB-2508
Reference Figure: None

Find No. Part No.	Part Name	Part Function	a. Failure Mode b. Cause c. FMN d. Detection Method e. Correcting Action f. Time to Effect g. Timeframe	Failure Effect On System Performance	Failure Effect On Vehicle Systems And/Or Personnel Safety	Crit Cat
			Fails High	Relay MWFLT will indicate a fault exists in the MWMCM when a fault does not exist. Relays MWDE, MWDC and PLC input will be de-energized. Hoist drive will be disabled and brakes will set.	No effect.	3
	J2-4	Drive enable input from Fault Sense Assembly and relay MWDE	Fails Low	MWMCM will not be enabled. Hoist drive will not run.	No effect.	3
			Fails High	Relay MWDE will de-energize relay MWDC, opening DC motor armature loop. PLC input will cause brakes to be set.	No effect.	3
	J2-6	Drive run input from PLC	Fails Low	MWMCM circuitry will not be enabled. Hoist drive will not operate.	No effect.	3
			Fails High	Delta Tau motion controller will command MWMCM to maintain zero current. Brakes will set.	No effect.	3
	J2-8	Auxiliary torque enable input from PLC	Fails Low	Motor control module will not send current through armature of motor to prove torque. PLC will disable hoist for torque proving failure.	No effect.	3

Table 18. **Electrical FMEA - Main Hoist Primary Mode**

System/Subsystem: 325 Ton Bridge Cranes at the Vehicle Assembly Building High Bays 1/2/3/4 / Main Hoist
PMN: H72-1200-01, -02
Drawing No.: EB-2508
Reference Figure: None

Find No. Part No.	Part Name	Part Function	a. Failure Mode b. Cause c. FMN d. Detection Method e. Correcting Action f. Time to Effect g. Timeframe	Failure Effect On System Performance	Failure Effect On Vehicle Systems And/Or Personnel Safety	Crit Cat
			Fails High	Motor control module will continue to use Aux. current reference to run motor. PLC will detect load imbalance and disable hoist and set brakes. Delta Tau motion controller will detect following error and signal PLC to disable drives and set brakes.	No effect.	3
	J2-11	External fault input from WSCR OT Sensor	Fails Low	PLC will detect SCR overtemp even though an overtemp condition does not exist. PLC will disable drives and set brakes.	No effect.	E
			Fails High	Loss of SCR overheat protection. Loss of SCR will cause phase imbalance at motor control module inputs which will be detected by MWFSA. MWSFA will disable drive. PLC will detect disabled drive and set brakes.	No effect.	3
	J2-15	Ready relay output to relay MWRDY and MWFRDY	Fails Low	MWMCM will not energize relay MWRDY or signal Delta Tau motion controller that MWMCM is ready. Hoist drive will be disabled. PLC will set brake.	No effect.	3
			Fails High	MWMCM J1-20 will de-energize relay MWFLT when fault occurs, de-energizing relays MWDE, MWDC and PLC input. Drive will be disabled and PLC will set brake.	No effect.	3

Table 18. **Electrical FMEA - Main Hoist Primary Mode**

System/Subsystem: 325 Ton Bridge Cranes at the Vehicle Assembly Building High Bays 1/2/3/4 / Main Hoist
PMN: H72-1200-01, -02
Drawing No.: EB-2508
Reference Figure: None

Find No. Part No.	Part Name	Part Function	a. Failure Mode b. Cause c. FMN d. Detection Method e. Correcting Action f. Time to Effect g. Timeframe	Failure Effect On System Performance	Failure Effect On Vehicle Systems And/Or Personnel Safety	Crit Cat
	J2-18	+25 volt DC output to Fault Sense Assembly, relay MWFLT and WSCR OT switch	Fails Low	Loss of +25 VDC to MWFSA and relay. MWMCM input J2-6 will not be energized to enable MWMCM circuitry. Hoist drive will not operate. MWMCM will fault internally on loss of +25 VDC and de-energize relays MWRDY and MWFLT causing PLC to disable drive and set brake.	No effect.	3
			Fails High	Possible damage to fault sense assembly or cause motor control module to malfunction. PLC will detect fault, disable drive, and set brakes.	No effect.	3
MESRA	Scaling Resistor Assembly	Scale voltage from Fault Resistors to conform to MEFSA circuitry	Fails Open	Voltage imbalance will be detected by MEFSA. MEFSA will disable MEMCM and de-energize relays MERDY and MEFRDY.	No effect.	3
			Fails Shorted	Voltage imbalance will be detected by MEFSA. MEFSA will disable MEMCM and de-energize relays MERDY and MEFRDY.	No effect.	3
MEFSA	Main Hoist East Fault Sense Assembly	Monitor Main Hoist East motor control module current balance, disabling MEMCM if imbalance occurs				
	J1-6	provide ground for relays MERDY and MEFRDY	Fails High	Relays MERDY and MEFRDY will not energize. Hoist drive will be disabled. Brakes will set.	No effect.	3

Table 18. **Electrical FMEA - Main Hoist Primary Mode**

System/Subsystem: 325 Ton Bridge Cranes at the Vehicle Assembly Building High Bays 1/2/3/4 / Main Hoist
PMN: H72-1200-01, -02
Drawing No.: EB-2508
Reference Figure: None

Find No. Part No.	Part Name	Part Function	a. Failure Mode b. Cause c. FMN d. Detection Method e. Correcting Action f. Time to Effect g. Timeframe	Failure Effect On System Performance	Failure Effect On Vehicle Systems And/Or Personnel Safety	Crit Cat
			Fails Low	Relays MERDY and MEFRDY will remain energized. Relays MEFSA and MEDE will disable MEMCM. Brakes will set.	No effect.	3
	J2-12	Provide enable signal for MEMCM	Fails High	Relay MEDE and PLC output will disable MEMCM. Brakes will set.	No effect.	3
			Fails Low	MEMCM will not be enabled. Drive will not operate. Torque will not be proved. Brakes will remain set.	No effect.	3
	J2-5	Provide power for sensing contacts of relay MEDC	Fails Low or No Output	MEFSA will sense that MEDC contact did not close even though it did. MEFSA will not enable MEMCM or provide ground for relays MERDY and MEFRDY. Hoist will not operate.	No effect.	3
	J2-6	Input from sensing contacts of relay MEDC	Fails Low	MEFSA will sense that MEDC contact did not close even though it did. MEFSA will not enable MEMCM or provide ground for relays MERDY and MEFRDY. Hoist will not operate.	No effect.	3
			Fails High	Relay MEDE and PLC output will disable MEMCM. Brakes will set.	No effect.	3
MERDY	Relay	Energizes when MEMCM is ready and MEFSA J1-6 goes low	Fails De-energized	Relay MEDE, MEDC and PLC input will not be energized to complete DC motor armature loop. Hoist drive will not operate. PLC will detect load imbalance or torque proving failure, disable drives and set brakes.	No effect.	3

Table 18. **Electrical FMEA - Main Hoist Primary Mode**

System/Subsystem: 325 Ton Bridge Cranes at the Vehicle Assembly Building High Bays 1/2/3/4 / Main Hoist
PMN: H72-1200-01, -02
Drawing No.: EB-2508
Reference Figure: None

Find No. Part No.	Part Name	Part Function	a. Failure Mode b. Cause c. FMN d. Detection Method e. Correcting Action f. Time to Effect g. Timeframe	Failure Effect On System Performance	Failure Effect On Vehicle Systems And/Or Personnel Safety	Crit Cat
			Fails Energized	MEMCM J1-20 goes high when fault occurs, de-energizing relay MEFLT. MEFLT will de-energize relay MEDE, MEDC and PLC input. Hoist drive will be disabled and brakes will set.	No effect.	3
	Contact	Closes to energize relay MEDC circuit	Fails Open	Relay MEDC will not be energized. MEDC contact will prevent MEMCM from being enabled. Hoist drive will not operate.	No effect.	3
			Fails Closed	Other MERDY contact will de-energize relay MEDE which will de-energize relay MEDC. MEMCM will be disabled. Hoist drive will not operate.	No effect.	3
	Contact	Closes to energize relay MEDE	Fails Open	Main hoist East drive enable relay will not energize. MEMCM will not be enabled. Hoist drive will not operate.	No effect.	3
			Fails Closed	No effect. Main hoist East drive enable relay will not energize until commanded by PLC and other MERDY contact will de-energize relay MEDC, disabling MEMCM. PLC will detect load imbalance or torque proving failure, disable drives and set brakes.	No effect.	3

Table 18. **Electrical FMEA - Main Hoist Primary Mode**

System/Subsystem: 325 Ton Bridge Cranes at the Vehicle Assembly Building High Bays 1/2/3/4 / Main Hoist
PMN: H72-1200-01, -02
Drawing No.: EB-2508
Reference Figure: None

Find No. Part No.	Part Name	Part Function	a. Failure Mode b. Cause c. FMN d. Detection Method e. Correcting Action f. Time to Effect g. Timeframe	Failure Effect On System Performance	Failure Effect On Vehicle Systems And/Or Personnel Safety	Crit Cat
	Contact	Opens to complete Aux. current reference circuit	Fails Open	Current command will not be sufficient to prove torque. PLC will not enable hoist motion due to torque proving failure.	No effect.	3
			Fails Closed	Motor control module will not use Aux. current reference until input J2-8 is energized. High current command will cause motor to drive through brake causing motion error. Delta Tau will detect uncommanded motion and signal PLC. PLC will disable drives.	No effect.	3
MEFRDY	Relay	Energizes when MEMCM is ready and MEFSA J1-6 goes low	Fails De-energized	Relay MEDC will not be energized. MEMCM will be disabled. PLC will detect load imbalance or torque proving failure and disable drives and set brakes.	No effect.	3
			Fails Energized	Relay MERDY will de-energize relay MEDC. MERDY contact will be damaged by high back EMF from coil of relay MEDC.	No effect.	3
	Contact	Closes to bypass R-C portion of MWDC circuit	Fails Open	Relay MWDC will not be energized. MWMCM will be disabled. PLC will detect load imbalance or torque proving failure and disable drives and set brakes.	No effect.	3
			Fails Closed	Relay MWRDY will de-energize relay MWDC. MERDY contact will be damaged by high back EMF from coil of relay MWDC.	No effect.	3

Table 18. **Electrical FMEA - Main Hoist Primary Mode**

System/Subsystem: 325 Ton Bridge Cranes at the Vehicle Assembly Building High Bays 1/2/3/4 / Main Hoist
PMN: H72-1200-01, -02
Drawing No.: EB-2508
Reference Figure: None

Find No. Part No.	Part Name	Part Function	a. Failure Mode b. Cause c. FMN d. Detection Method e. Correcting Action f. Time to Effect g. Timeframe	Failure Effect On System Performance	Failure Effect On Vehicle Systems And/Or Personnel Safety	Crit Cat
O:0,8,02	PLC output	Analog input to MEMCM to set current for torque proving	Fails High	Motor control module will not use Aux. current reference until input J2-8 is energized. High current command will cause motor to drive through brake causing motion error. Delta Tau will detect uncommanded motion and signal PLC. PLC will disable drives.	No effect.	3
			Fails Low or No Output	Current command will not be sufficient to provide torque. PLC will not enable hoist motion due to torque proving failure.	No effect.	3
None	Resistor 20K Ohms	Prevent PLC output from “floating” when an output is not being provided by the PLC	Fails Open	No effect. Motor control module will not use Aux. current reference until PLC energizes input J2-8.	No effect.	3
			Fails Shorted	Motor control module will receive an Aux. current command of zero. Torque will not be proved. PLC will not allow hoist operation.	No effect.	3
MEFLT	Main Hoist East fault relay	Energizes when MEMCM J1-20 goes low, signaling MEMCM has a fault	Fails De-energized	Relay MEFLT will indicate a fault exists in the MEMCM when a fault does not exist. Relays MEDE, MEDC and PLC input will be de-energized. Hoist drive will be disabled and brakes will set.	No effect.	3

Table 18. **Electrical FMEA - Main Hoist Primary Mode**

System/Subsystem: 325 Ton Bridge Cranes at the Vehicle Assembly Building High Bays 1/2/3/4 / Main Hoist
PMN: H72-1200-01, -02
Drawing No.: EB-2508
Reference Figure: None

Find No. Part No.	Part Name	Part Function	a. Failure Mode b. Cause c. FMN d. Detection Method e. Correcting Action f. Time to Effect g. Timeframe	Failure Effect On System Performance	Failure Effect On Vehicle Systems And/Or Personnel Safety	Crit Cat
			Fails Energized	MEMCM J2-15 will go low when fault occurs, de-energizing relays MERDY and MEFRDY. MERDY will de-energize relay MEDE, MEDC and PLC input. Hoist drive will be disabled and brake will set.	No effect.	3
	Contact	Closes to energize relay MEDE	Fails Open	Main hoist East drive enable relay will not energize. MEMCM will not be enabled. Hoist drive will not operate.	No effect.	3
			Fails Closed	MEMCM J2-15 will go low when fault occurs, de-energizing relay MERDY and MEFRDY. MERDY will de-energize relay MEDE, MEDC and PLC input. Hoist drive will be disabled and brake will set.	No effect.	3
O:1,5,A3	PLC Output	Energizes input J2-6, run, of MEMCM	Fails De-energized	MEMCM circuitry will not be enabled. Hoist drive will not operate.	No effect.	3
			Fails Energized	Delta Tau motion controller will command MEMCM to maintain zero speed, brakes will set.	No effect.	3
O:1,5,A4	PLC Output	Energizes input J2-8, Aux. torque enable, of MEMCM for torque proving	Fails De-energized	Motor control module will not send current through armature of motor to prove torque. PLC will disable hoist for torque proving failure.	No effect.	3

Table 18. **Electrical FMEA - Main Hoist Primary Mode**

System/Subsystem: 325 Ton Bridge Cranes at the Vehicle Assembly Building High Bays 1/2/3/4 / Main Hoist
PMN: H72-1200-01, -02
Drawing No.: EB-2508
Reference Figure: None

Find No. Part No.	Part Name	Part Function	a. Failure Mode b. Cause c. FMN d. Detection Method e. Correcting Action f. Time to Effect g. Timeframe	Failure Effect On System Performance	Failure Effect On Vehicle Systems And/Or Personnel Safety	Crit Cat
			Fails Energized	Motor control module will continue to use Aux. current reference to run motor. PLC will detect load imbalance and disable hoist and set brakes. Delta Tau motion controller will detect following error and signal PLC to disable drives and set brakes.	No effect.	3
I:1,4,C1	PLC input	De-energizes when East SCR overtemp sensor contacts open	Fails De-energized	PLC will detect SCR overtemp even though an overtemp condition does not exist. PLC will disable drives and set brakes.	No effect.	3
			Fails Energized	MEMCM input J2-11 will signal that SCR overtemp has occurred. MEMCM will be disabled and ready signal will be removed, de-energizing relay MERDY and MEFRDY which will de-energize relay MEDE and MEDC. PLC will detect drive not enabled and set brakes.	No effect.	3
ESCR OT	East SCR over Temperature Sensor	Contact opens when temperature of East SCRs exceeds a set value	Fails Open	PLC will detect SCR overtemp even though an overtemp condition does not exist. PLC will disable drives and set brakes.	No effect.	3
			Fails Closed	Loss of SCR overheat protection. Loss of SCR will cause phase imbalance at motor control module inputs which will be detected by MEFSA. MEFSA will disable drive. PLC will detect disabled drive and set brakes.	No effect.	3

Table 18. **Electrical FMEA - Main Hoist Primary Mode**

System/Subsystem: 325 Ton Bridge Cranes at the Vehicle Assembly Building High Bays 1/2/3/4 / Main Hoist
PMN: H72-1200-01, -02
Drawing No.: EB-2508
Reference Figure: None

Find No. Part No.	Part Name	Part Function	a. Failure Mode b. Cause c. FMN d. Detection Method e. Correcting Action f. Time to Effect g. Timeframe	Failure Effect On System Performance	Failure Effect On Vehicle Systems And/Or Personnel Safety	Crit Cat
MEMCM (continued)	Main Hoist East motor control module	Provides primary armature and field control of main hoist East motor				
	J1-8, 9	DC current reference input from Delta Tau motion controller	Fails Low	MEMCM will provide too low of a current to achieve or maintain speed commanded. Delta Tau motion controller will detect following error. PLC will shut down hoist drive and set brakes. PLC will detect load imbalance and disable drives and set brakes.	No effect.	3
			Fails High	MEMCM will provide too high of a current to achieve or maintain speed commanded. Delta Tau motion controller will detect following error. PLC will shut down hoist drive and set brakes. PLC will detect load imbalance and disable drives and set brakes.	No effect.	3
	J1-12	Auxiliary current reference input from PLC	Fails High	Motor control module will not use Aux. current reference until input J2-8 is energized. High current command will cause motor to drive through brakes causing motion error. Delta Tau will detect uncommanded motion and signal PLC. PLC will disable drives.	No effect.	3

Table 18. **Electrical FMEA - Main Hoist Primary Mode**

System/Subsystem: 325 Ton Bridge Cranes at the Vehicle Assembly Building High Bays 1/2/3/4 / Main Hoist
PMN: H72-1200-01, -02
Drawing No.: EB-2508
Reference Figure: None

Find No. Part No.	Part Name	Part Function	a. Failure Mode b. Cause c. FMN d. Detection Method e. Correcting Action f. Time to Effect g. Timeframe	Failure Effect On System Performance	Failure Effect On Vehicle Systems And/Or Personnel Safety	Crit Cat
			Fails Low or No output	Current command will not be sufficient to prove torque. PLC will not enable hoist motion due to torque proving failure.	No effect.	3
	J1-14	+15 volts DC output for Main Hoist East fault sense assembly	Fails Low	Voltage offset will cause imbalance in MEFSA comparators. MEFSA will indicate a fault has occurred and disable MEMCM. MEMCM will de-energize relays MEFLT and MERDY causing PLC to disable drive and set brakes.	No effect.	3
			Fails High	Voltage offset will cause imbalance in MEFSA comparators. MEFSA will indicate a fault has occurred and disable MEMCM. MEMCM will de-energize relays MEFLT and MERDY causing PLC to disable drive and set brakes.	No effect.	3
	J1-17	-15 volts DC output for Main Hoist East Fault Sense Assembly	Fails Low	Voltage offset will cause imbalance in MEFSA comparators. MEFSA will indicate a fault has occurred and disable MEMCM. MEMCM will de-energize relays MEFLT and MERDY causing PLC to disable drive and set brakes.	No effect.	3
			Fails High	Voltage offset will cause imbalance in MEFSA comparators. MEFSA will indicate a fault has occurred and disable MEMCM. MEMCM will de-energize relays MEFLT and MERDY causing PLC to disable drive and set brakes.	No effect.	3

Table 18. **Electrical FMEA - Main Hoist Primary Mode**

System/Subsystem: 325 Ton Bridge Cranes at the Vehicle Assembly Building High Bays 1/2/3/4 / Main Hoist
PMN: H72-1200-01, -02
Drawing No.: EB-2508
Reference Figure: None

Find No. Part No.	Part Name	Part Function	a. Failure Mode b. Cause c. FMN d. Detection Method e. Correcting Action f. Time to Effect g. Timeframe	Failure Effect On System Performance	Failure Effect On Vehicle Systems And/Or Personnel Safety	Crit Cat
	J1-20	Motor Control Fault Output	Fails Low	MEMCM J2-15 will go low when fault occurs, de-energizing relay MERDY. MERDY will de-energize relay MEDE, MEDC and PLC input. Hoist drive will be disabled and brake will set.	No effect.	3
			Fails High	Relay MEFLT will indicate a fault exists in the MEMCM when a fault does not exist. Relays MEDE, MEDC and PLC input will be de-energized. Hoist drive will be disabled and brakes will set.	No effect.	3
	J2-4	Drive enable input from Fault Sense Assembly and relay MEDE.	Fails Low	MEMCM will not be enabled. Hoist drive will not run.	No effect.	3
			Fails High	Relay MEDE will de-energize relay MEDC, opening DC motor armature loop. PLC input will cause brakes to be set.	No effect.	3
	J2-6	Drive run input from PLC	Fails Low	MEMCM circuitry will not be enabled. Hoist drive will not operate.	No effect.	3
			Fails High	Delta Tau motion controller will command MEMCM to maintain zero current. Brakes will set.	No effect.	3
	J2-8	Auxiliary torque enable input from PLC	Fails Low	Motor control module will not send current through armature of motor to prove torque. PLC will disable hoist for torque proving failure.	No effect.	3

Table 18. **Electrical FMEA - Main Hoist Primary Mode**

System/Subsystem: 325 Ton Bridge Cranes at the Vehicle Assembly Building High Bays 1/2/3/4 / Main Hoist
PMN: H72-1200-01, -02
Drawing No.: EB-2508
Reference Figure: None

Find No. Part No.	Part Name	Part Function	a. Failure Mode b. Cause c. FMN d. Detection Method e. Correcting Action f. Time to Effect g. Timeframe	Failure Effect On System Performance	Failure Effect On Vehicle Systems And/Or Personnel Safety	Crit Cat
			Fails High	Motor control module will continue to use Aux. current reference to run motor. PLC will detect load imbalance and disable hoist and set brakes. Delta Tau motion controller will detect following error and signal PLC to disable drives and set brakes.	No effect.	3
	J2-11	External Fault input from ESCR OT sensor	Fails Low	PLC will detect SCR overtemp even though an overtemp condition does not exist. PLC will disable drives and set brakes.	No effect.	3
			Fails Closed	Loss of SCR overheat protection. Loss of SCR will cause phase imbalance at motor control module inputs which will be detected by MEFSA. MEFSA will disable drive. PLC will detect disabled drive and set brakes.	No effect.	3
	J2-15	Ready relay output to relay MERDY and MEFRDY	Fails Low	MEMCM will not energize relay MERDY or signal Delta Tau motion controller that MEMCM is ready. Hoist drive will disable. PLC will set brake.	No effect.	3
			Fails High	MEMCM J1-20 will de-energize relay MEFLT when fault occurs, de-energizing relay MEDE, MEDC and PLC input. Drive will be disabled and PLC will set brake.	No effect.	3

Table 18. **Electrical FMEA - Main Hoist Primary Mode**

System/Subsystem: 325 Ton Bridge Cranes at the Vehicle Assembly Building High Bays 1/2/3/4 / Main Hoist
PMN: H72-1200-01, -02
Drawing No.: EB-2508
Reference Figure: None

Find No. Part No.	Part Name	Part Function	a. Failure Mode b. Cause c. FMN d. Detection Method e. Correcting Action f. Time to Effect g. Timeframe	Failure Effect On System Performance	Failure Effect On Vehicle Systems And/Or Personnel Safety	Crit Cat
	J2-18	+25 Volt DC output to Fault Sense Assembly, relay MEFLT and ESCR OT switch	Fails Low	Loss of +25 VDC to MEFSA and relay. MEMCM input J2-6 will not be energized to enable MEMCM circuitry. Hoist drive will not operate. MEMCM will fault internally on loss of +25 VDC and de-energize relays MERDY and MEFLT, causing PLC to disable drive and set brakes.	No effect.	3
			Fails High	Possible damage to fault sense assembly or cause motor control module to malfunction. PLC will detect fault, disable drive, and set brakes.	No effect.	3
None	Main Hoist drum absolute position dual turn resolver	Sends position feedback through resolver interface to PLC	Fails High Output	No effect. Resolver feedback is used only to display absolute position on the cruise control terminal. Data is not used for control of the hoist.	No effect.	3
			Fails Low or No Output	Loss of resolver feedback to PLC. Resolver feedback is used only to display absolute position on the cruise control terminal. Data is not used for control of the hoist.	No effect.	3
MRI	Main Hoist Resolver Interface	Provides interface between Absolute Position Resolver and PLC inputs	Fails Low or No Output	Value displayed on cruise control terminal will not change or jump between random values. Resolver feedback is used only to display absolute position on the cruise control terminal. Data is not used for control of the hoist.	No effect.	3

Table 18. **Electrical FMEA - Main Hoist Primary Mode**

System/Subsystem: 325 Ton Bridge Cranes at the Vehicle Assembly Building High Bays 1/2/3/4 / Main Hoist
PMN: H72-1200-01, -02
Drawing No.: EB-2508
Reference Figure: None

Find No. Part No.	Part Name	Part Function	a. Failure Mode b. Cause c. FMN d. Detection Method e. Correcting Action f. Time to Effect g. Timeframe	Failure Effect On System Performance	Failure Effect On Vehicle Systems And/Or Personnel Safety	Crit Cat
			Fails High Output	Value displayed on cruise control terminal will not change or jump between random values. Resolver feedback is used only to display absolute position on the cruise control terminal. Data is not used for control of the hoist.	No effect.	3
I:1,2,A1-A8 I:1,2,B1-B8 I:1,2,C1-C5	PLC Inputs	Inputs Main Hoist Resolver digital position (21 bit)	Fails De-energized (single input)	Value displayed on cruise control terminal will not change or jump between random values. Resolver feedback is used only to display absolute position on the cruise control terminal. Data is not used for control of the hoist.	No effect.	3
			Fails Energized (single input)	Value displayed on cruise control terminal will not change or jump between random values. Resolver feedback is used only to display absolute position on the cruise control terminal. Data is not used for control of the hoist.	No effect.	3
None	Main Hoist West Encoder	Send digital feedback to Delta Tau motion control board for servoing	Fails No Output	Delta Tau motion controller will detect loss of feedback and PLC will detect encoder imbalance. Hoist drive will be disabled. Brakes will (remain) set.	No effect.	3
			Fails Single Line No Output	Delta Tau motion controller will detect feedback error and PLC will detect encoder imbalance. Hoist drive will be disabled. Brakes will (remain) set.	No effect.	3

Table 18. **Electrical FMEA - Main Hoist Primary Mode**

System/Subsystem: 325 Ton Bridge Cranes at the Vehicle Assembly Building High Bays 1/2/3/4 / Main Hoist
PMN: H72-1200-01, -02
Drawing No.: EB-2508
Reference Figure: None

Find No. Part No.	Part Name	Part Function	a. Failure Mode b. Cause c. FMN d. Detection Method e. Correcting Action f. Time to Effect g. Timeframe	Failure Effect On System Performance	Failure Effect On Vehicle Systems And/Or Personnel Safety	Crit Cat
None	Main Hoist East Encoder	Send digital feedback to Delta Tau motion control board for servoing	Fails No Output	Delta Tau motion controller will detect loss of feedback and PLC will detect encoder imbalance. Hoist drive will be disabled. Brakes will (remain) set.	No effect.	3
			Fails Single Line No Output	Delta Tau motion controller will detect feedback error and PLC will detect encoder imbalance. Hoist drive will be disabled. Brakes will (remain) set.	No effect.	3
None	Weighing System Excitation Unit	Provides excitation for load cell in Main hoist and Auxiliary hoist weighing systems	Fails No Output	Loss of excitation signal for Main and Auxiliary hoist upper block #1 weighing systems. PLC inputs will be at zero volts. PLC will detect excessive difference between #1 and #2 weighing systems. PLC will disable hoist and set brakes.	No effect.	3
None	Main Hoist Load Cell	Alters excitation signal proportionally to load applied to load cell	Fails Low or No Output	Load signal will be lost or be lower than expected. Output from control unit to PLC input will be zero volts or lower than expected. PLC will detect excessive difference between #1 and #2 weighing systems. PLC will disable hoist and set brakes.	No effect.	3
			Fails High Output	Load signal will be higher than expected. Output from control unit to PLC input will be higher than expected. PLC will detect excessive difference between #1 and #2 weighing systems. PLC will disable hoist and set brakes.	No effect.	3

Table 18. **Electrical FMEA - Main Hoist Primary Mode**

System/Subsystem: 325 Ton Bridge Cranes at the Vehicle Assembly Building High Bays 1/2/3/4 / Main Hoist
PMN: H72-1200-01, -02
Drawing No.: EB-2508
Reference Figure: None

Find No. Part No.	Part Name	Part Function	a. Failure Mode b. Cause c. FMN d. Detection Method e. Correcting Action f. Time to Effect g. Timeframe	Failure Effect On System Performance	Failure Effect On Vehicle Systems And/Or Personnel Safety	Crit Cat
None	Main / Auxiliary weighing system control unit					
	1,2	Outputs 0-10 VDC signal proportional to load applied at load cell. Signal goes to PLC input.	Fails Low or No Output	PLC will detect excessive difference between #1 and #2 weighing systems. PLC will disable hoist and set brakes.	No effect.	3
			Fails High Output	PLC will detect excessive difference between #1 and #2 weighing systems. PLC will disable hoist and set brakes.	No effect.	3
	1,2,3,4	Excitation outputs and signal inputs from main hoist load cell	Fails Low or No Excitation	Load signal will be lost or be lower that expected. Output from control unit to PLC input will be zero volts or lower that expected. PLC will detect excessive difference between #1 and #2 weighing systems. PLC will disable hoist and set brakes.	No effect.	3
			Fails Low or No Input	Load signal will be lost or be lower than expected. Output from control unit to PLC input will be zero volts or lower than expected. PLC will detect excessive difference between #1 and #2 weighing systems. PLC will disable hoist and set brakes.	No effect.	3

Table 18. **Electrical FMEA - Main Hoist Primary Mode**

System/Subsystem: 325 Ton Bridge Cranes at the Vehicle Assembly Building High Bays 1/2/3/4 / Main Hoist
PMN: H72-1200-01, -02
Drawing No.: EB-2508
Reference Figure: None

Find No. Part No.	Part Name	Part Function	a. Failure Mode b. Cause c. FMN d. Detection Method e. Correcting Action f. Time to Effect g. Timeframe	Failure Effect On System Performance	Failure Effect On Vehicle Systems And/Or Personnel Safety	Crit Cat
			Fails High Input	Output from control unit to PLC input will be higher than expected. PLC will detect excessive difference between #1 and #2 weighing systems. PLC will disable hoist and set brakes.	No effect.	3
None	Resistor 20K ohms	Prevent PLC input from “floating” when an input is not being provided by the weighing system.	Fails Open	No effect. Hoist will not operate unless both weighing systems equal load signals to the PLC.	No effect.	3
			Fails Shorted	PLC input will be shorted to ground reference. PLC will detect difference between the two main hoist weighing systems. PLC will disable hoist and set brakes.	No effect.	3
I:0,6,01	PLC Input	Analog input for 0-10 VDC signal from Main / Aux. weighing system control unit	Fails Low or No Input	PLC will detect excessive difference between #1 and #2 weighing systems. PLC will disable hoist and set brakes.	No effect.	3
			Fails High Input	PLC will detect excessive difference between #1 and #2 weighing systems. PLC will disable hoist and set brakes.	No effect.	3
MWS2	Main Hoist Upper Block Weighing System No. 2 Strain meter					

Table 18. **Electrical FMEA - Main Hoist Primary Mode**

System/Subsystem: 325 Ton Bridge Cranes at the Vehicle Assembly Building High Bays 1/2/3/4 / Main Hoist
PMN: H72-1200-01, -02
Drawing No.: EB-2508
Reference Figure: None

Find No. Part No.	Part Name	Part Function	a. Failure Mode b. Cause c. FMN d. Detection Method e. Correcting Action f. Time to Effect g. Timeframe	Failure Effect On System Performance	Failure Effect On Vehicle Systems And/Or Personnel Safety	Crit Cat
	P5-1, P5-2	Outputs analog signal proportional to load applied at strain gauge. Signal goes to PLC Input	Fails Low or No Output	PLC will detect excessive difference between #1 and #2 weighing systems. PLC will disable hoist and set brakes.	No effect.	3
			Fails High Output	PLC will detect excessive difference between #1 and #2 weighing systems. PLC will disable hoist and set brakes.	No effect.	3
	P9-1, P3-1	Excitation outputs for strain gauge	Fails Low or No Excitation	Feedback level will be lower than expected or not present. Output to PLC will be lower than expected or zero. PLC will detect excessive difference between #1 and #2 weighing systems. PLC will disable hoist and set brakes.	No effect.	3
	P9-2, P9-3	Signal inputs from strain gauge	Fails Low or No Input	Output to PLC will be lower than expected or zero. PLC will detect excessive difference between #1 and #2 weighing systems. PLC will disable hoist and set brakes.	No effect.	3
			Fails High Input	Output from control unit to PLC input will be higher than expected. PLC will detect excessive difference between #1 and #2 weighing systems. PLC will disable hoist and set brakes.	No effect.	3

Table 18. **Electrical FMEA - Main Hoist Primary Mode**

System/Subsystem: 325 Ton Bridge Cranes at the Vehicle Assembly Building High Bays 1/2/3/4 / Main Hoist
PMN: H72-1200-01, -02
Drawing No.: EB-2508
Reference Figure: None

Find No. Part No.	Part Name	Part Function	a. Failure Mode b. Cause c. FMN d. Detection Method e. Correcting Action f. Time to Effect g. Timeframe	Failure Effect On System Performance	Failure Effect On Vehicle Systems And/Or Personnel Safety	Crit Cat
None	Strain Gauge, Upper Block	Alters excitation signal proportionally to load applied to upper block	Fails Low or No Output	Output to PLC will be lower than expected or zero. PLC will detect excessive difference between #1 and #2 weighing systems. PLC will disable hoist and set brakes.	No effect.	3
			Fails High Output	Output from control unit to PLC input will be higher than expected. PLC will detect excessive difference between #1 and #2 weighing systems. PLC will disable hoist and set brakes.	No effect.	3
None	Resistor 20K Ohm	Prevent PLC input from “floating” when an input is not being provided by the weighing system	Fails Open	No effect. Hoist will not operate unless both weighing systems equal load signals to the PLC.	No effect.	3
			Fails Shorted	PLC input will be shorted to ground reference. PLC will detect difference between the two main hoist weighing systems. PLC will disable hoist and set brakes.	No effect.	3
I:0,7,03	PLC Input	Analog input for signal from main hoist upper block weighing system No. 2	Fails Low or No Input	PLC will detect excessive difference between #1 and #2 weighing systems. PLC will disable hoist and set brakes.	No effect.	3
			Fails High Input	PLC will detect excessive difference between #1 and #2 weighing systems. PLC will disable hoist and set brakes.	No effect.	3

Table 18. **Electrical FMEA - Main Hoist Primary Mode**

System/Subsystem: 325 Ton Bridge Cranes at the Vehicle Assembly Building High Bays 1/2/3/4 / Main Hoist
PMN: H72-1200-01, -02
Drawing No.: EB-2508
Reference Figure: None

Find No. Part No.	Part Name	Part Function	a. Failure Mode b. Cause c. FMN d. Detection Method e. Correcting Action f. Time to Effect g. Timeframe	Failure Effect On System Performance	Failure Effect On Vehicle Systems And/Or Personnel Safety	Crit Cat
MRFU1, MRFU2	Fuse	Protects upstream circuitry from overloads in Main Hoist lower block rotate drive	Prematurely Operates	Loss of power to rotate motor controller. Loss of ability to rotate load.	No effect.	3
			Fails to Operate	Opposite fuse will protect circuitry against overload. Requires previous failure to cause overload.	No effect.	3
MRT	Transformer, Main Hoist Hook Rotation	Converts 480 VAC to 240 VAC for Main Hoist Lower Block Rotate Drives	Fails Open	Loss of power to rotate motor controller. Loss of ability to rotate load.	No effect.	3
			Fails Shorted	MRFU1 and MRFU2 will protect circuitry against overload.	No effect.	3
MRFU3	Fuse	Protects upstream circuitry from overloads in Main Hoist Lower Block rotate drives	Prematurely Operates	Loss of power to rotate motor controller. Loss of ability to rotate load.	No effect.	3
			Fails to Operate	MRFU1 and MRFU2 will protect circuitry against overload. Requires previous failure to cause overload.	No effect.	3
O:I,6,A1	PLC Output	Energizes start input of Main Hoist Lower Block Rotate Motor Controller	Fails De-energized	Start input of rotate motor controller will not be energized. Rotation drive will not operate.	No effect.	3
			Fails Energized	Start input of rotate motor controller will remain energized. Requires RUN input and a direction input to be energized before rotation will occur.	No effect.	3

Table 18. **Electrical FMEA - Main Hoist Primary Mode**

System/Subsystem: 325 Ton Bridge Cranes at the Vehicle Assembly Building High Bays 1/2/3/4 / Main Hoist
PMN: H72-1200-01, -02
Drawing No.: EB-2508
Reference Figure: None

Find No. Part No.	Part Name	Part Function	a. Failure Mode b. Cause c. FMN d. Detection Method e. Correcting Action f. Time to Effect g. Timeframe	Failure Effect On System Performance	Failure Effect On Vehicle Systems And/Or Personnel Safety	Crit Cat
O:1,6,A2	PLC Output	Energizes RUN input of Main Hoist Lower Block Rotate Motor Controller	Fails De-energized	RUN input of rotate motor controller will not be energized. Rotation drive will not operate.	No effect.	3
			Fails Energized	RUN input of rotate motor controller will remain energized. Requires START input and a direction input to be energized before rotation will occur.	No effect.	3
O:1,6,A3	PLC Output	Energizes FWD input of Main Hoist Lower Block Rotate Motor Controller	Fails De-energized	Forward input of rotate motor controller will not be energized. Rotation drive will not operate clockwise.	No effect.	3
			Fails Energized	Requires START input and RUN input to be energized before rotation will occur. Will operate clockwise normally. PLC will detect if controller attempts to operate in direction other than commanded and halt hook rotation.	No effect.	3
O:1,6,A4	PLC Output	Energizes REV input of Main Hoist Lower Block Rotate Motor Controller	Fails De-energized	Reverse input of rotate motor controller will not be energized. Rotation drive will not operate counterclockwise.	No effect.	3
			Fails Energized	Requires START input and RUN input to be energized before rotation will occur. Will operate counterclockwise normally. PLC will detect if controller attempts to operate in direction other than commanded and halt hook rotation.	No effect.	3

Table 18. **Electrical FMEA - Main Hoist Primary Mode**

System/Subsystem: 325 Ton Bridge Cranes at the Vehicle Assembly Building High Bays 1/2/3/4 / Main Hoist
PMN: H72-1200-01, -02
Drawing No.: EB-2508
Reference Figure: None

Find No. Part No.	Part Name	Part Function	a. Failure Mode b. Cause c. FMN d. Detection Method e. Correcting Action f. Time to Effect g. Timeframe	Failure Effect On System Performance	Failure Effect On Vehicle Systems And/Or Personnel Safety	Crit Cat
MLBMC	Main Hoist Lower Block Motor Controller	Controls field and armature current for main hoist hook rotation drive motor				
	F1, F2	Field current outputs to Main Hoist Hook rotation motor.	Fails Low or No Output	Hook rotation motor will not operate due to loss of field current or unable to develop sufficient torque. A weakened field will cause a rotation speed higher than expected. PLC will shut down rotation drive controller when it detects speed other than commanded.	No effect.	3
			Fails High Output	Higher field current will cause a slower rotation speed than expected and higher motor temperature will trip over temperature switch, disabling rotation drive.	No effect.	3
	ARM 47, ARM 45	Armature current outputs to Main Hoist Hook Rotation Motor	Fails Low or No Output	Hook rotation will not operate due to loss of armature current or will rotate slower than expected. PLC will shut down rotation drive when it detects speed other than commanded.	No effect.	3
			Fails High Output	Load will rotate faster than expected. PLC will shut down rotation drive when it detects speed other than commanded.	No effect.	3

Table 18. **Electrical FMEA - Main Hoist Primary Mode**

System/Subsystem: 325 Ton Bridge Cranes at the Vehicle Assembly Building High Bays 1/2/3/4 / Main Hoist
PMN: H72-1200-01, -02
Drawing No.: EB-2508
Reference Figure: None

Find No. Part No.	Part Name	Part Function	a. Failure Mode b. Cause c. FMN d. Detection Method e. Correcting Action f. Time to Effect g. Timeframe	Failure Effect On System Performance	Failure Effect On Vehicle Systems And/Or Personnel Safety	Crit Cat
None	Main Hoist Lower Block Rotate Potentiometer	Provides interface from operator to command direction and speed of Main Hoist Hook Rotation Drive.	* See component Breakdown below			
	* CW	Contacts close to energize PLC inputs commanding hook rotation drive to operate clockwise	Fails Open (single contact)	Hook rotation drive will not operate. Requires both PLC inputs to be energized to operate rotation drive.	No effect.	3
			Fails Closed (single contact)	No effect. Requires both PLC inputs to be energized to operate rotation drive.	No effect.	3
	* CCW	Contacts close to energize PLC inputs commanding hook rotation drive to operate counterclockwise	Fails Open (single contact)	Hook rotation drive will not operate. Requires both PLC inputs to be energized to operate rotation drive.	No effect.	3
			Fails Closed (single contact)	No effect. Requires both PLC inputs to be energized to operate rotation drive.	No effect.	3
	* 5K Potentiometer	Provides 0 to 10 Volt signal to rotation drive	Fails Open	Loss of speed command voltage to rotation drive. Drive will be enabled but will not rotate load.	No effect.	3
			Fails Short	Short will cause an overload of rotation drive power supply circuit causing fuse MRFU1, MRFU2 or MRFU3 to blow, resulting in loss of power to rotation drive. Unable to rotate load.	No effect.	3

Table 18. **Electrical FMEA - Main Hoist Primary Mode**

System/Subsystem: 325 Ton Bridge Cranes at the Vehicle Assembly Building High Bays 1/2/3/4 / Main Hoist
PMN: H72-1200-01, -02
Drawing No.: EB-2508
Reference Figure: None

Find No. Part No.	Part Name	Part Function	a. Failure Mode b. Cause c. FMN d. Detection Method e. Correcting Action f. Time to Effect g. Timeframe	Failure Effect On System Performance	Failure Effect On Vehicle Systems And/Or Personnel Safety	Crit Cat
GI:05, IN14	PLC Input	Energizes when CW contact closes, commanding load to rotate clockwise	Fails De-energized	Load will not rotate in direction commanded. PLC requires both direction inputs to enable drive.	No effect.	3
			Fails Energized	No effect. PLC requires both PLC inputs energized to command load to rotate clockwise.	No effect.	3
GI:06, IN14	PLC Input	Energizes when CW contact closes commanding load to rotate clockwise	Fails De-energized	Load will not rotate in direction commanded. PLC requires both direction inputs to enable drive.	No effect.	3
			Fails Energized	No effect. PLC requires both PLC inputs energized to command load to rotate clockwise.	No effect.	3
GI:05, IN15	PLC Input	Energizes when CCW contact closes commanding load to rotate counterclockwise	Fails De-energized	Load will not rotate in direction commanded. PLC requires both direction inputs to enable drive.	No effect.	3
			Fails Energized	No effect. PLC requires both PLC inputs energized to command load to rotate counter clockwise.	No effect.	3
GI:06, IN15	PLC Input	Energizes when CCW contact closes commanding load to rotate counterclockwise	Fails De-energized	Load will not rotate in direction commanded. PLC requires both direction inputs to enable drive.	No effect.	3
			Fails Energized	No effect. PLC requires both PLC inputs energized to command load to rotate counter clockwise.	No effect.	3

Table 18. **Electrical FMEA - Main Hoist Primary Mode**

System/Subsystem: 325 Ton Bridge Cranes at the Vehicle Assembly Building High Bays 1/2/3/4 / Main Hoist
PMN: H72-1200-01, -02
Drawing No.: EB-2508
Reference Figure: None

Find No. Part No.	Part Name	Part Function	a. Failure Mode b. Cause c. FMN d. Detection Method e. Correcting Action f. Time to Effect g. Timeframe	Failure Effect On System Performance	Failure Effect On Vehicle Systems And/Or Personnel Safety	Crit Cat
None	Main Hoist Rotate Clutch Selector Switch	Contacts close to energize PLC inputs commanding PLC to engage or disengage hook rotation drive	Fails Open	Loss of ability to engage or disengage hook rotation drive. Hook rotation drive will remain engaged or disengaged.	No effect.	3
			Fails Closed	Loss of ability to engage or disengage hook rotation drive. Hook rotation drive will remain engaged or disengaged.	No effect.	3
GI:10, IN11	PLC Input	Energizes when selector switch is commanding the hook rotation drive to engage	Fails De-energized	Engage signal from Selector Switch will not be received by PLC. Will not be able to engage hook rotation.	No effect.	3
			Fails Energized	Loss of ability to disengage hook rotation. Indicator light on control cab console will indicate hook rotation still engaged.	No effect.	3
GI:10, IN12	PLC Input	Energizes when Hook Rotation Selection Switch is in the neutral position	Fails De-energized	No effect. Other PLC inputs will disable engage or disengage commands.	No effect.	3
			Fails Energized	Loss of ability to engage or disengage hook rotation drive.	No effect.	3
I:2,5,D3	PLC Input	Energizes when Selector Switch is commanding the hook rotation drive to disengage	Fails De-energized	Disengage signal from Selector Switch will not be received by PLC. Will not be able to disengage hook rotation.	No effect.	3

Table 18. **Electrical FMEA - Main Hoist Primary Mode**

System/Subsystem: 325 Ton Bridge Cranes at the Vehicle Assembly Building High Bays 1/2/3/4 / Main Hoist
PMN: H72-1200-01, -02
Drawing No.: EB-2508
Reference Figure: None

Find No. Part No.	Part Name	Part Function	a. Failure Mode b. Cause c. FMN d. Detection Method e. Correcting Action f. Time to Effect g. Timeframe	Failure Effect On System Performance	Failure Effect On Vehicle Systems And/Or Personnel Safety	Crit Cat
			Fails Energized	Loss of ability to engage hook rotation. Indicator light on control cab console will indicate hook rotation not engaged.	No effect.	3
None	Main Hoist Rotate Display Reset Push-button	Contact closes to energize PLC inputs commanding rotation display indicator to blank out and digital display to indicate ---.- degrees	Fails Open	Loss of ability to reset hook rotation display.	No effect.	3
			Fails Closed	Hook rotation display will remain in reset condition with rotation display indicator to be blanked out and digital display indicating ---.- degrees.	No effect.	3
GI:09, IN10	PLC Input	Energizes when hook rotation display reset push-button is pressed	Fails De-energized	Loss of ability to reset hook rotation display.	No effect.	3
			Fails Energized	Hook rotation display will remain in reset condition with rotation display indicator to be blanked out and digital display indicating ---.- degrees.	No effect.	3
None	Main Hoist Rotate Limit Bypass Switch	Contacts open to de-energize PLC input, allowing load rotation greater than 45 degrees from center position	Fails Open	Loss of hook rotation limits. Load can rotate past 45 degrees from center position when hook load pin cable is connected causing cable to disconnect and/or be damaged.	No effect.	3

Table 18. **Electrical FMEA - Main Hoist Primary Mode**

System/Subsystem: 325 Ton Bridge Cranes at the Vehicle Assembly Building High Bays 1/2/3/4 / Main Hoist
PMN: H72-1200-01, -02
Drawing No.: EB-2508
Reference Figure: None

Find No. Part No.	Part Name	Part Function	a. Failure Mode b. Cause c. FMN d. Detection Method e. Correcting Action f. Time to Effect g. Timeframe	Failure Effect On System Performance	Failure Effect On Vehicle Systems And/Or Personnel Safety	Crit Cat
			Fails Closed	Loss of ability to rotate load more than 45 degrees in either direction from center.	No effect.	3
GI:09, IN12	PLC Input	Energizes when Hook Rotation Limit Bypass Switch is in the normal position.	Fails De-energized	Loss of hook rotation limits. Load can rotate past 45 degrees from center position when hook load pin cable is connected causing cable to disconnect and/or be damaged.	No effect.	3
			Fails Energized	Loss of ability to rotate load more than 45 degrees in either direction from center.	No effect.	3
None	Main Hoist Rotate Engaged Limit Switch	Contacts close to energize PLC input when Hook Rotation Clutch mechanism is engaged	Fails Open	Linear actuator will not automatically stop operation at end of travel and light on cab control panel will not illuminate to indicate that the rotation drive is engaged. Actuator motor will stall out at end of travel. Possible damage to linear actuator if operator continually commands hook rotate engage. Hook rotation will operate if commanded. Requires operator error to command hook rotation when load can contact an obstruction.	No effect.	3
			Fails Closed	PLC will detect hook rotation drive is engaged continuously. PLC will prevent hook rotation drive from being engaged once it has been disengaged.	No effect.	3

Table 18. **Electrical FMEA - Main Hoist Primary Mode**

System/Subsystem: 325 Ton Bridge Cranes at the Vehicle Assembly Building High Bays 1/2/3/4 / Main Hoist
PMN: H72-1200-01, -02
Drawing No.: EB-2508
Reference Figure: None

Find No. Part No.	Part Name	Part Function	a. Failure Mode b. Cause c. FMN d. Detection Method e. Correcting Action f. Time to Effect g. Timeframe	Failure Effect On System Performance	Failure Effect On Vehicle Systems And/Or Personnel Safety	Crit Cat
MHHE	Relay, Main Hoist Hook Rotate Engaged	Energizes when hook rotation engaged limit switch closes	Fails De-energized	Indicator light on control cab console will not illuminate when hook rotation drive is engaged. Hook rotation drive will operate if commanded. Requires operator error to command hook rotation when load can contact an obstruction.	No effect.	3
			Fails Energized	Indicator light on control cab console will remain illuminated continuously when rotation drive is disengaged. Hook rotation drive will operate normally.	No effect.	3
	Contact	Closes to energize Main Hoist Hook Rotation engaged indicator light on control cab console	Fails Open	Indicator light on control cab console will not illuminate when hook rotation drive is engaged. Hook rotation drive will operate if commanded. Requires operator error to command hook rotation when load can contact an obstruction.	No effect.	3
			Fails Closed	Indicator light on control cab console will remain illuminated continuously when rotation drive is disengaged. Hook rotation drive will operate normally.	No effect.	3

Table 18. **Electrical FMEA - Main Hoist Primary Mode**

System/Subsystem: 325 Ton Bridge Cranes at the Vehicle Assembly Building High Bays 1/2/3/4 / Main Hoist
PMN: H72-1200-01, -02
Drawing No.: EB-2508
Reference Figure: None

Find No. Part No.	Part Name	Part Function	a. Failure Mode b. Cause c. FMN d. Detection Method e. Correcting Action f. Time to Effect g. Timeframe	Failure Effect On System Performance	Failure Effect On Vehicle Systems And/Or Personnel Safety	Crit Cat
I:2,5,B1	PLC Input	De-energizes when hook rotation limit switch opens	Fails De-energized	Linear actuator will not automatically stop operation when engaged limit switch is tripped. Hook rotate engaged indicator light will come on in control cab. Operator will release rotation engage switch when light comes on, stopping actuator operation.	No effect.	3
			Fails Energized	PLC will not allow extension of linear actuator to engage hook rotation. Unable to engage hook rotation drive.	No effect.	3
None	Main Hoist Rotate Disengaged Limit Switch	Contacts close to energize PLC input when hook rotation clutch mechanism is disengaged	Fails Open	PLC will not detect when hook rotation drive is disengaged and continue to operate the linear actuator as commanded by the operator. Actuator motor will stall out at end of travel. Possible damage to linear if operator continually commands hook rotation disengage.	No effect.	3
			Fails Closed	PLC will detect hook rotation drive is disengaged continuously. PLC will prevent hook rotation drive from being disengaged once it has been engaged.	No effect.	3

Table 18. **Electrical FMEA - Main Hoist Primary Mode**

System/Subsystem: 325 Ton Bridge Cranes at the Vehicle Assembly Building High Bays 1/2/3/4 / Main Hoist
PMN: H72-1200-01, -02
Drawing No.: EB-2508
Reference Figure: None

Find No. Part No.	Part Name	Part Function	a. Failure Mode b. Cause c. FMN d. Detection Method e. Correcting Action f. Time to Effect g. Timeframe	Failure Effect On System Performance	Failure Effect On Vehicle Systems And/Or Personnel Safety	Crit Cat
I:2,5,D7	PLC Input	Energizes when Hook Rotation Disengaged Limit Switch closes	Fails De-energized	PLC will detect rotation drive not disengaged and continue operation of actuator as commanded by the operator. Actuator motor will stall out at end of travel. Possible damage to linear actuator if operator continually commands hook rotation disengage.	No effect.	3
			Fails Energized	PLC will detect hook rotation drive is disengaged continuously. PLC will prevent hook rotation drive from being disengaged once it has been engaged.	No effect.	3
None	Indicator Light, Main Hoist Hook Rotation Engaged	Illuminates when Main Hoist Hook Rotation Drive is engaged	Fails Open	Indicator light on control cab console will not illuminate when hook rotation drive is engaged. Hook rotation drive will operate if commanded. Requires operator error to command hook rotation when load can contact an obstruction.	No effect.	3
			Fails Shorted	When hook rotation is engaged, current overload will blow FU12, removing control power from Main Hoist. All drives will be disabled and all brakes will set.	No effect.	3
O:1,6,C3	PLC Output	Energizes relay INIT, Main and Auxiliary Hoist Hook Rotation Actuator Drive Initialization	Fails De-energized	No effect. This component is no longer use.	No effect.	3

Table 18. **Electrical FMEA - Main Hoist Primary Mode**

System/Subsystem: 325 Ton Bridge Cranes at the Vehicle Assembly Building High Bays 1/2/3/4 / Main Hoist
PMN: H72-1200-01, -02
Drawing No.: EB-2508
Reference Figure: None

Find No. Part No.	Part Name	Part Function	a. Failure Mode b. Cause c. FMN d. Detection Method e. Correcting Action f. Time to Effect g. Timeframe	Failure Effect On System Performance	Failure Effect On Vehicle Systems And/Or Personnel Safety	Crit Cat
			Fails Energized	No effect. This component is no longer use.	No effect.	3
INIT	Relay, Main and Auxiliary Hoist Hook Rotation Actuator Drive Initialization	De-energized when Hook Rotation Limit Switch opens	Fails De-energized	No effect. This component is no longer use.	No effect.	3
			Fails Energized	No effect. This component is no longer use.	No effect.	3
O:1,6,D1	PLC Output	Energizes relay MRTR, Main Hoist Hook Rotation Actuator Drive Retract	Fails De-energized	Loss of ability to disengage Hook Rotation Drive	No effect.	3
			Fails Energized	When retract is commanded, actuator motor will run until it stalls out at end of travel. Possible damage to linear actuator due to overheating. Loss of ability to engage or disengage Hook Rotation Drive. Hook rotation will remain disengaged.	No effect.	3
MRTR	Relay, Main Hoist Hook Rotation Actuator Drive Retract	Energizes when PLC output commands Hook Rotation Actuator Drive to retract	Fails De-energized	Loss of ability to disengage Hook Rotation Drive.	No effect.	3

Table 18. **Electrical FMEA - Main Hoist Primary Mode**

System/Subsystem: 325 Ton Bridge Cranes at the Vehicle Assembly Building High Bays 1/2/3/4 / Main Hoist
PMN: H72-1200-01, -02
Drawing No.: EB-2508
Reference Figure: None

Find No. Part No.	Part Name	Part Function	a. Failure Mode b. Cause c. FMN d. Detection Method e. Correcting Action f. Time to Effect g. Timeframe	Failure Effect On System Performance	Failure Effect On Vehicle Systems And/Or Personnel Safety	Crit Cat
			Fails Energized	When retract is commanded, actuator motor will run until it stalls out at end of travel. Possible damage to linear actuator due to overheating. Loss of ability to engage or disengage Hook Rotation Drive. Hook rotation will remain disengaged.	No effect.	3
	Contact (All 4 contacts)	Closes to supply power to Retract Linear Actuator	Fails Open	Loss of power to Linear Actuator. Loss of ability to retract Linear Actuator.	No effect.	3
			Fails Closed	Will provide path to short 24 volts AC to ground when extend is commanded.	No effect.	3
O:1,6,D2	PLC Output	Energizes relay MEXT, Main Hoist Hook Rotation Actuator Drive Extend	Fails De-energized	Loss of ability to engage Hook Rotation Drive.	No effect.	3
			Fails Energized	When extend is commanded, actuator motor will run until it stalls out at end of travel. Possible damage to Linear Actuator due to overheating. Loss of ability to engage or disengage Hook Rotation Drive. Hook rotation will remain engaged.	No effect.	3
MEXT	Relay, Main Hoist Hook Rotation Actuator Drive Extend	Energizes when PLC output commands Hook Rotation Actuator Drive to extend	Fails De-energized	Loss of ability to engage Hook Rotation Drive.	No effect.	3

Table 18. **Electrical FMEA - Main Hoist Primary Mode**

System/Subsystem: 325 Ton Bridge Cranes at the Vehicle Assembly Building High Bays 1/2/3/4 / Main Hoist
PMN: H72-1200-01, -02
Drawing No.: EB-2508
Reference Figure: None

Find No. Part No.	Part Name	Part Function	a. Failure Mode b. Cause c. FMN d. Detection Method e. Correcting Action f. Time to Effect g. Timeframe	Failure Effect On System Performance	Failure Effect On Vehicle Systems And/Or Personnel Safety	Crit Cat
			Fails Energized	When extend is commanded, actuator motor will run until it stalls out at end of travel. Possible damage to Linear Actuator due to overheating. Loss of ability to engage or disengage Hook Rotation Drive. Hook rotation will remain engaged.	No effect.	3
	Contact (Any 1 of 4 or all 4)	Closes to supply power to extend Linear Actuator	Fails Open	Loss of power to Linear Actuator. Loss of ability to extend Linear Actuator.	No effect.	3
			Fails Closed	Will provide path to short 24 volts AC to ground when retract is commanded.	No effect.	3
MOT OT	Over Temperature Switch	Opens when Main Hoist Hook Rotation Drive Motor temperature exceeds a preset value	Fails Closed	Loss of overheat protection. Possible damage to motor due to overheating. Requires previous failure to cause overheating.	No effect.	3
			Fails Open	PLC will detect rotation drive motor overheated and disable rotation drive.	No effect.	3
I:2,5,B2	PLC Input	De-energizes when Main Hoist Hook Rotation Drive Motor over temperature switch opens	Fails De-energized	PLC will detect Rotation Drive motor overheated and disable rotation drive.	No effect.	3

Table 18. **Electrical FMEA - Main Hoist Primary Mode**

System/Subsystem: 325 Ton Bridge Cranes at the Vehicle Assembly Building High Bays 1/2/3/4 / Main Hoist
PMN: H72-1200-01, -02
Drawing No.: EB-2508
Reference Figure: None

Find No. Part No.	Part Name	Part Function	a. Failure Mode b. Cause c. FMN d. Detection Method e. Correcting Action f. Time to Effect g. Timeframe	Failure Effect On System Performance	Failure Effect On Vehicle Systems And/Or Personnel Safety	Crit Cat
			Fails Energized	Loss of overheat protection. Possible damage to motor due to overheating. Requires previous failure to cause overheating.	No effect.	3
LAFU1, LAFU2	Fuse	Protects upstream circuitry from overloads in Main and Auxiliary Hoist Lower Block Rotate Actuator Circuits	Prematurely Operates	Loss of power to rotation motor actuators. Loss of ability to engage or disengage hook rotation drives.	No effect.	3
			Fails to Operate	Opposite fuse will protect circuitry against overload. Requires previous failure to cause overload.	No effect.	3
LAT	Transformer, Main and Auxiliary Hoist Hook Rotation Actuator	Converts 240 VAC to 24 VAC for Main and Auxiliary Hoist Lower Block Rotate Actuator circuit	Fails Open	Loss of power to Rotation Motor Actuators. Loss of ability to engage or disengage Hook Rotation Drives.	No effect.	3
			Fails Shorted	LAFU1 and LAFU2 will protect circuitry against overload.	No effect.	3
LAFU3	Fuse	Protects upstream circuitry from overloads in Main and Auxiliary Hoist Lower Block Rotate Actuator circuits	Prematurely Operates	Loss of power to Rotation Motor Actuators. Loss of ability to engage or disengage Hook Rotation Drives.	No effect.	3
			Fails to Operate	LAFU1 and LAFU2 will protect circuitry against overload. Requires previous failure to cause overload.	No effect.	3

Table 18. **Electrical FMEA - Main Hoist Primary Mode**

System/Subsystem: 325 Ton Bridge Cranes at the Vehicle Assembly Building High Bays 1/2/3/4 / Main Hoist
PMN: H72-1200-01, -02
Drawing No.: EB-2508
Reference Figure: None

Find No. Part No.	Part Name	Part Function	a. Failure Mode b. Cause c. FMN d. Detection Method e. Correcting Action f. Time to Effect g. Timeframe	Failure Effect On System Performance	Failure Effect On Vehicle Systems And/Or Personnel Safety	Crit Cat
LAR	Resistor, 25 Ohm	Part of R-C circuit used for linear actuator input signal conditioning. Ensures linear operation of actuator.	Fails Open	Loss of power to drive Linear Actuator. Loss of ability to engage or disengage Hook Rotation Drive.	No effect.	3
			Fails Shorted	Loss of linear actuator input signal conditioning. Actuator will operate non-linearly. Loss of ability to engage or disengage Hook Rotation Drive.	No effect.	3
LAC1, LAC2	Capacitor, 50 Mirco-farad	Part of R-C circuit used for linear actuator input signal conditioning. Ensures linear operation of actuator.	Fails Open	Loss of power to drive Linear Actuator. Loss of ability to engage or disengage Hook Rotation Drive	No effect.	3
			Fails Shorted	Loss of linear actuator input signal conditioning. Actuator will operate non-linearly. Loss of ability to engage or disengage Hook Rotation Drive.	No effect.	3
None	Main Hoist Linear Actuator	Converts electrical energy to kinetic energy to actuate Main Hoist Hook Rotation Disengagement Clutch	Fails Open	Loss of ability to engage or disengage Hook Rotation Drive.	No effect.	3
			Fails Shorted	Overcurrent will cause LAFU1, LAFU2 or LAFU3 to blow resulting in loss of power to actuator. Loss of ability to engage or disengage Hook Rotation Drive.	No effect.	3

Table 18. **Electrical FMEA - Main Hoist Primary Mode**

System/Subsystem: 325 Ton Bridge Cranes at the Vehicle Assembly Building High Bays 1/2/3/4 / Main Hoist
PMN: H72-1200-01, -02
Drawing No.: EB-2508
Reference Figure: None

Find No. Part No.	Part Name	Part Function	a. Failure Mode b. Cause c. FMN d. Detection Method e. Correcting Action f. Time to Effect g. Timeframe	Failure Effect On System Performance	Failure Effect On Vehicle Systems And/Or Personnel Safety	Crit Cat
None	Main Hoist Rotate Single Turn Resolver	Sends Main Hoist Hook Rotation position feedback through resolver interface to PLC	Fails No Output	Hook position display will be erratic due to data channel loss. Operator will halt hook rotation due to faulty display and investigate source of display error.	No effect.	3
MRRI	Main Hoist Lower Block Rotate Resolver Interface Module	Provides interface between Rotation Position Resolver and PLC inputs	Fails Low or No Output	Hook position display will be erratic due to data channel loss. Operator will halt hook rotation due to faulty display and investigate source of display error.	No effect.	3
			Fails High Output	Hook position display will be erratic due to data channel loss. Operator will halt hook rotation due to faulty display and investigate source of display error.	No effect.	3
I:1,3,A1-A8 I:1,3,B1-B8	PLC Inputs	Inputs Main Hoist Rotate Resolver Digital position (16 bit)	Fails De-energized (single input)	Hook position display will be erratic due to data channel loss. Operator will halt hook rotation due to faulty display and investigate source of display error.	No effect.	3
			Fails Energized (single input)	Hook position display will be erratic due to data channel loss. Operator will halt hook rotation due to faulty display and investigate source of display error.	No effect.	3
I:1,3,COM	PLC Input	Signal common for Hoist Rotate resolver position inputs	Fails Disconnected	Hook position display will be erratic due to data channel loss. Operator will halt hook rotation due to faulty display and investigate source of display error.	No effect.	3

Table 18. **Electrical FMEA - Main Hoist Primary Mode**

System/Subsystem: 325 Ton Bridge Cranes at the Vehicle Assembly Building High Bays 1/2/3/4 / Main Hoist
PMN: H72-1200-01, -02
Drawing No.: EB-2508
Reference Figure: None

Find No. Part No.	Part Name	Part Function	a. Failure Mode b. Cause c. FMN d. Detection Method e. Correcting Action f. Time to Effect g. Timeframe	Failure Effect On System Performance	Failure Effect On Vehicle Systems And/Or Personnel Safety	Crit Cat
None	Surge Suppresser	Protects circuitry from power surges	Prematurely Operates	Nuisance tripping of circuit Breaker BNCB.	No effect.	3
			Fails to Operate	Loss of power surge protection for downstream circuitry.	No effect.	3
ED-2412	Capacitor network	Eliminates power system ringing on input of field power module	Fails open	Power system ringing will be inputted to field power module. Possible damage to field power module.	No effect.	3
			Fails shorted	Field power module 20 amp fuses will blow. Following error will be detected by PLC and set brakes	No effect.	3

Electrical FMEA, Main Hoist Backup Mode
Wire harnesses, cables, or connectors were not analyzed in the Electrical FMEA for this system since a single failure (open or short) could not result in the loss of life or vehicle. (Ref. NSTS 22206, Paragraph 4.4.1.b.2)

In Backup mode, it is assumed that a failure has occurred in the East drive which was detected and caused the Main / Auxiliary hoist to be disabled. The controls were configured for the single mode of operation by switching the drive select switch to West drive only and switching the East drive circuit Breaker off. The Main / Auxiliary hoist are now configured for their backup mode of operation whereby only the west drive will be utilized. The following “Back-Up” mode FMEA indicates only the areas where the system performance is altered. All other failure effects on system performance are identical to that of the “Normal” mode of operation.

This FMEA section references Ederer drawing EB-2508, specifically the following sheets:

Sheet	Title
4	Main Hoist West Motor Control Elementary
5	Main Hoist East Motor Control Elementary
6	Main Hoist Control Elementary
7	Main Hoist Control Elementary
8	Main Hoist Control Elementary
9	Main Hoist Control Elementary
10	Main Hoist West Motor Control Electronics Elementary
11	Main Hoist East Motor Control Electronics Elementary
12	Main Hoist Resolver Positioning System
13	Main Hoist Encoder Positioning System
14	Main Hoist Lower Block Weighting System
15	Main Hoist Upper Block Weighting System #1
16	Main Hoist Upper Block Weighting System #2
17	Main Hoist Lower Rotate Motor Control Elementary
18	Main Hoist Lower Rotate Control Elementary
19	Main Hoist Lower Block Rotate Positioning System

Table 19. **Electrical FMEA - Main Hoist Backup Mode**

System/Subsystem: 325 Ton Bridge Cranes at the Vehicle Assembly Building High Bays 1/2/3/4 / Main Hoist
PMN: H72-1200-01, -02
Drawing No.: EB-2508
Reference Figure: None

Find No. Part No.	Part Name	Part Function	a. Failure Mode b. Cause c. FMN d. Detection Method e. Correcting Action f. Time to Effect g. Timeframe	Failure Effect On System Performance	Failure Effect On Vehicle Systems And/Or Personnel Safety	Crit Cat
MWCA	Main Hoist West Cable Adapter	Provides interface between PLC and MWMCM, and field current feedback to MWMCM				
	15, Armature Current Feedback	Provides current feedback to PLC input	Fails No Output	Torque will not be proved. PLC will not allow hoist to operate. If failure occurs while hoist is operating, Delta Tau controller will increase armature current to correct for the apparent low armature current output. Delta Tau controller will detect following error and signal PLC to disable Hoist and set brakes if motor speed does not match speed commanded.	No effect.	3
	19, Field Current Feedback	Provides field current feedback to PLC input	Fails No Output	PLC will detect loss of field current, shut down hoist and set brakes. Delta Tau motion control board will attempt to servo hoist motors to commanded speed. If motors do not reach or maintain commanded speed, Delta Tau motion control board will detect following error. Drive will be disabled and brakes set.	No effect.	3

Table 19. **Electrical FMEA - Main Hoist Backup Mode**

System/Subsystem: 325 Ton Bridge Cranes at the Vehicle Assembly Building High Bays 1/2/3/4 / Main Hoist
PMN: H72-1200-01, -02
Drawing No.: EB-2508
Reference Figure: None

Find No. Part No.	Part Name	Part Function	a. Failure Mode b. Cause c. FMN d. Detection Method e. Correcting Action f. Time to Effect g. Timeframe	Failure Effect On System Performance	Failure Effect On Vehicle Systems And/Or Personnel Safety	Crit Cat
	5, Field Current Reference Signal	Provides interface for Field Current command from PLC to MWMCM	Fails No Output	PLC will detect loss of field current, shut down hoist and set brakes. Motor control module will also detect loss of field current and shut down. PLC will detect motor control module not ready and set brakes. Delta Tau motion control board will attempt to servo hoist motors to commanded speed. If motors do no reach or maintain commanded speed, Delta Tau motion control board will detect following error. Drive will be disabled and brakes will set.	No effect.	3
MWR4	Resistor	Part of RC snubber on DC armature loop	Fails Open	Will cause “cogging” of motor. PLC will detect encoder imbalance and shut down drives and set brakes. Higher peak armature currents will cause motor to overheat. PLC will detect overheat conditions, shut down drive and set brakes.	No effect.	3
			Fails Shorted	Motor control module will fault on instantaneous overcurrent. PLC will detect drive not ready and set brakes.	No effect.	3
MWC2	Capacitor	Part or RC snubber on DC armature loop	Fails Open	Will cause “cogging” of motor. PLC will detect encoder imbalance and shut down drives and set brakes. Higher peak armature currents will cause motor to overheat. PLC will detect overheat condition, shut down drive and set brakes.	No effect.	3

Table 19. **Electrical FMEA - Main Hoist Backup Mode**

System/Subsystem: 325 Ton Bridge Cranes at the Vehicle Assembly Building High Bays 1/2/3/4 / Main Hoist
PMN: H72-1200-01, -02
Drawing No.: EB-2508
Reference Figure: None

Find No. Part No.	Part Name	Part Function	a. Failure Mode b. Cause c. FMN d. Detection Method e. Correcting Action f. Time to Effect g. Timeframe	Failure Effect On System Performance	Failure Effect On Vehicle Systems And/Or Personnel Safety	Crit Cat
			Fails Shorted	Motor control module will fault on instantaneous overcurrent. PLC will detect drive not ready and set brakes.	No effect.	3
None	Main Hoist Motor, West	Provide torque to mechanical drive system to move load				
	Armature Windings	Provides torque to rotate motor output shaft	Fails Open	Loss of current path for one hoist motor. Delta Tau motion controller will detect loss of armature current feedback and signal PLC to shut down drives and set brakes. Delta Tau will continue to servo motor to commanded speed. If speed does not match speed commanded, Delta Tau will disable drive and set brakes.	No effect.	3
			Fails Shorted	Excessive current will flow through shorted motor. MWMCM will detect instantaneous overcurrent, disabling drive and setting brakes. Excessive current will trip overload switch, disabling drive, or Delta Tau motion control board will detect following error.	No effect.	3
MECB	Circuit Breaker	Protects circuitry from overloads in main hoist East drive circuit	Prematurely Operates	No effect. This circuit Breaker has been opened to disable the East drive and will not affect the operation of the hoist until the East drive is repaired and switched back online.	No effect.	3

Table 19. **Electrical FMEA - Main Hoist Backup Mode**

System/Subsystem: 325 Ton Bridge Cranes at the Vehicle Assembly Building High Bays 1/2/3/4 / Main Hoist
PMN: H72-1200-01, -02
Drawing No.: EB-2508
Reference Figure: None

Find No. Part No.	Part Name	Part Function	a. Failure Mode b. Cause c. FMN d. Detection Method e. Correcting Action f. Time to Effect g. Timeframe	Failure Effect On System Performance	Failure Effect On Vehicle Systems And/Or Personnel Safety	Crit Cat
			Fails to Operate	No effect. This circuit Breaker has been opened to disable the East drive and will not affect the operation of the hoist until the East drive is repaired and switched back online.	No effect.	3
MEIT	Isolation Transformer	Isolates Main Hoist East Drive circuit to reduce electrical noise and interference	Fails Open	No effect. Power to this component and the East drive has been removed by opening MECB and will not affect the operation of the hoist until the East drive is repaired and switched back online.	No effect.	3
			Fails Shorted	No effect. Power to this component and the East drive has been removed by opening MECB and will not affect the operation of the hoist until the East drive is repaired and switched back online.	No effect.	3
None	Surge Suppresser	Protects circuitry from power surges	Prematurely Operates	Nuisance tripping of circuit Breaker BNCB.	No effect.	3
			Fails to Operate	Loss of power surge protection for downstream circuitry.	No effect.	3
ED-2412	Capacitor network	Eliminates power system ringing on input of field power module	Fails open	Power system ringing will be inputted to field power module. Possible damage to field power module.	No effect.	3
			Fails shorted	Field power module 20 amp fuses will blow. Following error will be detected by PLC and set brakes	No effect.	3

Table 19. **Electrical FMEA - Main Hoist Backup Mode**

System/Subsystem: 325 Ton Bridge Cranes at the Vehicle Assembly Building High Bays 1/2/3/4 / Main Hoist
PMN: H72-1200-01, -02
Drawing No.: EB-2508
Reference Figure: None

Find No. Part No.	Part Name	Part Function	a. Failure Mode b. Cause c. FMN d. Detection Method e. Correcting Action f. Time to Effect g. Timeframe	Failure Effect On System Performance	Failure Effect On Vehicle Systems And/Or Personnel Safety	Crit Cat
MEFU1, MEFU2, MEFU3	Fuse	Protects circuitry from overloads in Main Hoist East Motor Blower circuit	Prematurely Operates	No effect. Power to this component and the East drive has been removed by opening MECB and will not affect the operation of the hoist until the East drive is repaired and switched back online.	No effect.	3
			Fails to Operate	No effect. Power to this component and the East drive has been removed by opening MECB and will not affect the operation of the hoist until the East drive is repaired and switched back online.	No effect.	3
MEPM	Main East Phase Monitor Relay	Monitors 3 phase power for proper phase relationships	Fails De-energized	No effect. Power to this component and the East drive has been removed by opening MECB and will not affect the operation of the hoist until the East drive is repaired and switched back online.	No effect.	3
			Fails Energized	No effect. Power to this component and the East drive has been removed by opening MECB and will not affect the operation of the hoist until the East drive is repaired and switched back online.	No effect.	3
	Contact	Opens to De-energize relays MERDY, MEFRDY if improper phase relationship is detected	Fails Open	No effect. Power to this component and the East drive has been removed by opening MECB and will not affect the operation of the hoist until the East drive is repaired and switched back online.	No effect.	3

Table 19. **Electrical FMEA - Main Hoist Backup Mode**

System/Subsystem: 325 Ton Bridge Cranes at the Vehicle Assembly Building High Bays 1/2/3/4 / Main Hoist
PMN: H72-1200-01, -02
Drawing No.: EB-2508
Reference Figure: None

Find No. Part No.	Part Name	Part Function	a. Failure Mode b. Cause c. FMN d. Detection Method e. Correcting Action f. Time to Effect g. Timeframe	Failure Effect On System Performance	Failure Effect On Vehicle Systems And/Or Personnel Safety	Crit Cat
			Fails Closed	No effect. Power to this component and the East drive has been removed by opening MECB and will not affect the operation of the hoist until the East drive is repaired and switched back online.	No effect.	3
MEBOL	Overload Switch	Switch contact opens when excessive current is detected in Main Hoist East motor blower circuit	Prematurely Operates	No effect. Power to this component and the East drive has been removed by opening MECB and will not affect the operation of the hoist until the East drive is repaired and switched back online.	No effect.	3
			Fails to Operate	No effect. Power to this component and the East drive has been removed by opening MECB and will not affect the operation of the hoist until the East drive is repaired and switched back online.	No effect.	3
	Contact	Opens to de-energize PLC input	Fails Open	No effect. Power to this component and the East drive has been removed by opening MECB and will not affect the operation of the hoist until the East drive is repaired and switched back online.	No effect.	3
			Fails Closed	No effect. Power to this component and the East drive has been removed by opening MECB and will not affect the operation of the hoist until the East drive is repaired and switched back online.	No effect.	3

Table 19. **Electrical FMEA - Main Hoist Backup Mode**

System/Subsystem: 325 Ton Bridge Cranes at the Vehicle Assembly Building High Bays 1/2/3/4 / Main Hoist
PMN: H72-1200-01, -02
Drawing No.: EB-2508
Reference Figure: None

Find No. Part No.	Part Name	Part Function	a. Failure Mode b. Cause c. FMN d. Detection Method e. Correcting Action f. Time to Effect g. Timeframe	Failure Effect On System Performance	Failure Effect On Vehicle Systems And/Or Personnel Safety	Crit Cat
MEBR	Main East Blower Relay	Energizes when Main Hoist west blower is powered	Fails De-energized	No effect. Power to this component and the East drive has been removed by opening MECB and will not affect the operation of the hoist until the East drive is repaired and switched back online.	No effect.	3
			Fails Energized	No effect. Power to this component and the East drive has been removed by opening MECB and will not affect the operation of the hoist until the East drive is repaired and switched back online.	No effect.	3
	Contact	Opens to de-energize PLC input	Fails Open	No effect. Power to this component and the East drive has been removed by opening MECB and will not affect the operation of the hoist until the East drive is repaired and switched back online.	No effect.	3
			Fails Closed	No effect. Power to this component and the East drive has been removed by opening MECB and will not affect the operation of the hoist until the East drive is repaired and switched back online.	No effect.	3
None	Main Hoist East Blower Motor	Provide cooling airflow for Main hoist west motor	Fails Open	No effect. Power to this component and the East drive has been removed by opening MECB and will not affect the operation of the hoist until the East drive is repaired and switched back online.	No effect.	3

Table 19. **Electrical FMEA - Main Hoist Backup Mode**

System/Subsystem: 325 Ton Bridge Cranes at the Vehicle Assembly Building High Bays 1/2/3/4 / Main Hoist
PMN: H72-1200-01, -02
Drawing No.: EB-2508
Reference Figure: None

Find No. Part No.	Part Name	Part Function	a. Failure Mode b. Cause c. FMN d. Detection Method e. Correcting Action f. Time to Effect g. Timeframe	Failure Effect On System Performance	Failure Effect On Vehicle Systems And/Or Personnel Safety	Crit Cat
			Fails Shorted	No effect. Power to this component and the East drive has been removed by opening MECB and will not affect the operation of the hoist until the East drive is repaired and switched back online.	No effect.	3
None	Resistor	Provides voltage input for Fault Sense Assembly	Fails Open	No effect. Power to this component and the East drive has been removed by opening MECB and will not affect the operation of the hoist until the East drive is repaired and switched back online.	No effect.	3
			Fails Short	No effect. Power to this component and the East drive has been removed by opening MECB and will not affect the operation of the hoist until the East drive is repaired and switched back online.	No effect.	3
MEL1, MEL2, MEL3, MEL4, MEL5, MEL6	Inductor	Provides inductive load for motor control module power input	Fails Open	No effect. Power to this component and the East drive has been removed by opening MECB and will not affect the operation of the hoist until the East drive is repaired and switched back online.	No effect.	3
			Fails Short	No effect. Power to this component and the East drive has been removed by opening MECB and will not affect the operation of the hoist until the East drive is repaired and switched back online.	No effect.	3

Table 19. **Electrical FMEA - Main Hoist Backup Mode**

System/Subsystem: 325 Ton Bridge Cranes at the Vehicle Assembly Building High Bays 1/2/3/4 / Main Hoist
PMN: H72-1200-01, -02
Drawing No.: EB-2508
Reference Figure: None

Find No. Part No.	Part Name	Part Function	a. Failure Mode b. Cause c. FMN d. Detection Method e. Correcting Action f. Time to Effect g. Timeframe	Failure Effect On System Performance	Failure Effect On Vehicle Systems And/Or Personnel Safety	Crit Cat
None	Tachometer	Generates voltage proportional to rotational speed of East main hoist motor	Fails Low or No Output	No effect. Power to this component and the East drive has been removed by opening MECB and will not affect the operation of the hoist until the East drive is repaired and switched back online.	No effect.	3
			Fails High Output	No effect. Power to this component and the East drive has been removed by opening MECB and will not affect the operation of the hoist until the East drive is repaired and switched back online.	No effect.	3
MEMCM	Main Hoist East Motor Control Module	Provides primary armature and field control of East Main hoist motor				
	Armature Current Outputs A1, A2	Provides current for Hoist motor armature windings	Fails Low or No Output	No effect. Power to this component and the East drive has been removed by opening MECB and will not affect the operation of the hoist until the East drive is repaired and switched back online.	No effect.	3
			Fails High Output	No effect. Power to this component and the East drive has been removed by opening MECB and will not affect the operation of the hoist until the East drive is repaired and switched back online.	No effect.	3

Table 19. **Electrical FMEA - Main Hoist Backup Mode**

System/Subsystem: 325 Ton Bridge Cranes at the Vehicle Assembly Building High Bays 1/2/3/4 / Main Hoist
PMN: H72-1200-01, -02
Drawing No.: EB-2508
Reference Figure: None

Find No. Part No.	Part Name	Part Function	a. Failure Mode b. Cause c. FMN d. Detection Method e. Correcting Action f. Time to Effect g. Timeframe	Failure Effect On System Performance	Failure Effect On Vehicle Systems And/Or Personnel Safety	Crit Cat
	Field Current Outputs F1, F2	Provides current for Hoist motor field windings	Fails Low or No Output	No effect. Power to this component and the East drive has been removed by opening MECB and will not affect the operation of the hoist until the East drive is repaired and switched back online.	No effect.	3
			Fails High Output	No effect. Power to this component and the East drive has been removed by opening MECB and will not affect the operation of the hoist until the East drive is repaired and switched back online.	No effect.	3
MECA	Main Hoist East Cable Adapter	Provides interface between PLC and MEMCM and Field Current Feedback to MEMCM				
	15, Armature Current Feedback	Provides current feedback to PLC input	Fails No Output	No effect. Power to this component and the East drive has been removed by opening MECB and will not affect the operation of the hoist until the East drive is repaired and switched back online.	No effect.	3
	19, Field Current Feedback	Provides field current feedback to PLC input	Fails No Output	No effect. Power to this component and the East drive has been removed by opening MECB and will not affect the operation of the hoist until the East drive is repaired and switched back online.	No effect.	3

Table 19. **Electrical FMEA - Main Hoist Backup Mode**

System/Subsystem: 325 Ton Bridge Cranes at the Vehicle Assembly Building High Bays 1/2/3/4 / Main Hoist
PMN: H72-1200-01, -02
Drawing No.: EB-2508
Reference Figure: None

Find No. Part No.	Part Name	Part Function	a. Failure Mode b. Cause c. FMN d. Detection Method e. Correcting Action f. Time to Effect g. Timeframe	Failure Effect On System Performance	Failure Effect On Vehicle Systems And/Or Personnel Safety	Crit Cat
	5, Field Current Reference	Provides interface for Field Current command from PLC to MEMCM	Fails No Output	No effect. Power to this component and the East drive has been removed by opening MECB and will not affect the operation of the hoist until the East drive is repaired and switched back online.	No effect.	3
MEFB	Main Hoist East Field Board	Measures current in East Motor Field loop and sends feedback signal to MEMCM firing board				
	4, Field Current Feedback	Provides current feedback to MEMCM	Fails Low or No Output	No effect. Power to this component and the East drive has been removed by opening MECB and will not affect the operation of the hoist until the East drive is repaired and switched back online.	No effect.	3
			Fails High Output	No effect. Power to this component and the East drive has been removed by opening MECB and will not affect the operation of the hoist until the East drive is repaired and switched back online.	No effect.	3
O:0,8,14	PLC Output	Provides field current reference signal to MECA	Fails Low or No Output	No effect. Power to this component and the East drive has been removed by opening MECB and will not affect the operation of the hoist until the East drive is repaired and switched back online.	No effect.	3

Table 19. **Electrical FMEA - Main Hoist Backup Mode**

System/Subsystem: 325 Ton Bridge Cranes at the Vehicle Assembly Building High Bays 1/2/3/4 / Main Hoist
PMN: H72-1200-01, -02
Drawing No.: EB-2508
Reference Figure: None

Find No. Part No.	Part Name	Part Function	a. Failure Mode b. Cause c. FMN d. Detection Method e. Correcting Action f. Time to Effect g. Timeframe	Failure Effect On System Performance	Failure Effect On Vehicle Systems And/Or Personnel Safety	Crit Cat
			Fails High Output	No effect. Power to this component and the East drive has been removed by opening MECB and will not affect the operation of the hoist until the East drive is repaired and switched back online.	No effect.	3
None	Resistor 20 KOhm	Prevent PLC input from “Floating” when an input is not being provided by MECA	Fails Open	No effect. Power to this component and the East drive has been removed by opening MECB and will not affect the operation of the hoist until the East drive is repaired and switched back online.	No effect.	3
			Fails Shorted	No effect. Power to this component and the East drive has been removed by opening MECB and will not affect the operation of the hoist until the East drive is repaired and switched back online.	No effect.	3
I:0,6,13	PLC Input	Provides armature current feedback to PLC	Fails Low or No Input	No effect. Power to this component and the East drive has been removed by opening MECB and will not affect the operation of the hoist until the East drive is repaired and switched back online.	No effect.	3
			Fails High Input	No effect. Power to this component and the East drive has been removed by opening MECB and will not affect the operation of the hoist until the East drive is repaired and switched back online.	No effect.	3

Table 19. **Electrical FMEA - Main Hoist Backup Mode**

System/Subsystem: 325 Ton Bridge Cranes at the Vehicle Assembly Building High Bays 1/2/3/4 / Main Hoist
PMN: H72-1200-01, -02
Drawing No.: EB-2508
Reference Figure: None

Find No. Part No.	Part Name	Part Function	a. Failure Mode b. Cause c. FMN d. Detection Method e. Correcting Action f. Time to Effect g. Timeframe	Failure Effect On System Performance	Failure Effect On Vehicle Systems And/Or Personnel Safety	Crit Cat
None	Resistor 20 Kohms	Prevent PLC input from "Floating" when an input is not being provided by MECA	Fails Open	No effect. Power to this component and the East drive has been removed by opening MECB and will not affect the operation of the hoist until the East drive is repaired and switched back online.	No effect.	3
			Fails Shorted	No effect. Power to this component and the East drive has been removed by opening MECB and will not affect the operation of the hoist until the East drive is repaired and switched back online.	No effect.	3
I:0,6,15	PLC Input	Provides field current feedback to PLC	Fails Low or No Input	No effect. Power to this component and the East drive has been removed by opening MECB and will not affect the operation of the hoist until the East drive is repaired and switched back online.	No effect.	3
			Fails High Input	No effect. Power to this component and the East drive has been removed by opening MECB and will not affect the operation of the hoist until the East drive is repaired and switched back online.	No effect.	3
MER4	Resistor	Part of RC Snubber on DC armature loop	Fails Open	No effect. Power to this component and the East drive has been removed by opening MECB and will not affect the operation of the hoist until the East drive is repaired and switched back online.	No effect.	3

Table 19. **Electrical FMEA - Main Hoist Backup Mode**

System/Subsystem: 325 Ton Bridge Cranes at the Vehicle Assembly Building High Bays 1/2/3/4 / Main Hoist
PMN: H72-1200-01, -02
Drawing No.: EB-2508
Reference Figure: None

Find No. Part No.	Part Name	Part Function	a. Failure Mode b. Cause c. FMN d. Detection Method e. Correcting Action f. Time to Effect g. Timeframe	Failure Effect On System Performance	Failure Effect On Vehicle Systems And/Or Personnel Safety	Crit Cat
			Fails Shorted	No effect. Power to this component and the East drive has been removed by opening MECB and will not affect the operation of the hoist until the East drive is repaired and switched back online.	No effect.	3
MEC2	Capacitor	Part of RC Snubber on DC armature loop	Fails Open	No effect. Power to this component and the East drive has been removed by opening MECB and will not affect the operation of the hoist until the East drive is repaired and switched back online.	No effect.	3
			Fails Shorted	No effect. Power to this component and the East drive has been removed by opening MECB and will not affect the operation of the hoist until the East drive is repaired and switched back online.	No effect.	3
MEOL	Overload Switch	Contact opens when excessive current is detected in motor armature loop	Prematurely Operates	No effect. Power to this component and the East drive has been removed by opening MECB and will not affect the operation of the hoist until the East drive is repaired and switched back online.	No effect.	3
			Fails to Operate	No effect. Power to this component and the East drive has been removed by opening MECB and will not affect the operation of the hoist until the East drive is repaired and switched back online.	No effect.	3

Table 19. **Electrical FMEA - Main Hoist Backup Mode**

System/Subsystem: 325 Ton Bridge Cranes at the Vehicle Assembly Building High Bays 1/2/3/4 / Main Hoist
PMN: H72-1200-01, -02
Drawing No.: EB-2508
Reference Figure: None

Find No. Part No.	Part Name	Part Function	a. Failure Mode b. Cause c. FMN d. Detection Method e. Correcting Action f. Time to Effect g. Timeframe	Failure Effect On System Performance	Failure Effect On Vehicle Systems And/Or Personnel Safety	Crit Cat
	Contact, Normally Closed	De-energizes PLC input when overload switch detects excessive current in motor armature loop	Fails Open	No effect. Power to this component and the East drive has been removed by opening MECB and will not affect the operation of the hoist until the East drive is repaired and switched back online.	No effect.	3
			Fails Closed	No effect. Power to this component and the East drive has been removed by opening MECB and will not affect the operation of the hoist until the East drive is repaired and switched back online.	No effect.	3
None	Ammeter	Indicated amount of current flowing in motor armature loop	Fails Open	No effect. Power to this component and the East drive has been removed by opening MECB and will not affect the operation of the hoist until the East drive is repaired and switched back online.	No effect.	3
			Fails Shorted	No effect. Power to this component and the East drive has been removed by opening MECB and will not affect the operation of the hoist until the East drive is repaired and switched back online.	No effect.	3
MESF1 MESF2	Fuse 1A	Provides overload protection for main hoist East motor control modules armature circuit	Premature Operation	No effect. Power to this component and the East drive has been removed by opening MECB and will not affect the operation of the hoist until the East drive is repaired and switched back online.	No effect.	3

Table 19. **Electrical FMEA - Main Hoist Backup Mode**

System/Subsystem: 325 Ton Bridge Cranes at the Vehicle Assembly Building High Bays 1/2/3/4 / Main Hoist
PMN: H72-1200-01, -02
Drawing No.: EB-2508
Reference Figure: None

Find No. Part No.	Part Name	Part Function	a. Failure Mode b. Cause c. FMN d. Detection Method e. Correcting Action f. Time to Effect g. Timeframe	Failure Effect On System Performance	Failure Effect On Vehicle Systems And/Or Personnel Safety	Crit Cat
None	Main Hoist Motor, East	Provide torque to mechanical drive system to move load	Fails to Operate	No effect. Power to this component and the East drive has been removed by opening MECB and will not affect the operation of the hoist until the East drive is repaired and switched back online.	No effect.	3
	Armature Windings	Provides torque to rotate motor output shaft	Fails Open	No effect. Power to this component and the East drive has been removed by opening MECB and will not affect the operation of the hoist until the East drive is repaired and switched back online.	No effect.	3
			Fails Shorted	No effect. Power to this component and the East drive has been removed by opening MECB and will not affect the operation of the hoist until the East drive is repaired and switched back online.	No effect.	3
	Field Windings	Provides static magnetic field for armature magnetic field to work against	Fails Open	No effect. Power to this component and the East drive has been removed by opening MECB and will not affect the operation of the hoist until the East drive is repaired and switched back online.	No effect.	3

Table 19. **Electrical FMEA - Main Hoist Backup Mode**

System/Subsystem: 325 Ton Bridge Cranes at the Vehicle Assembly Building High Bays 1/2/3/4 / Main Hoist
PMN: H72-1200-01, -02
Drawing No.: EB-2508
Reference Figure: None

Find No. Part No.	Part Name	Part Function	a. Failure Mode b. Cause c. FMN d. Detection Method e. Correcting Action f. Time to Effect g. Timeframe	Failure Effect On System Performance	Failure Effect On Vehicle Systems And/Or Personnel Safety	Crit Cat
			Fails Shorted	No effect. Power to this component and the East drive has been removed by opening MECB and will not affect the operation of the hoist until the East drive is repaired and switched back online.	No effect.	3
I:2,4,B7	PLC Input	De-energizes when overload switch detects excessive current in Main Hoist East armature current loop	Fails De-energized	PLC will detect excessive current through motor. PLC will disable drive and set brakes.	No effect.	3
			Fails Energized	No effect, East drive has been disabled.	No effect.	3
I:2,5,B6	PLC Input	Energized when relay MEBR contact closes	Fails De-energized	No effect. PLC will disregard this input when West drive only is selected.	No effect.	3
			Fails Energized	No effect. PLC will disregard this input when West drive only is selected.	No effect.	3
MWDC	Main Hoist West DC Contactor Relay	Energizes when Main Hoist West Drive is enabled	Fails De-energized	DC armature loop will open, torque will not be proved or if hoist is in operation, Delta Tau motion controller will detect following error and signal PLC to disable drive and set brakes.	No effect.	3
			Fails Energized	DC motor armature loop will remain closed. PLC will disable drives and set brakes.	No effect.	3

Table 19. **Electrical FMEA - Main Hoist Backup Mode**

System/Subsystem: 325 Ton Bridge Cranes at the Vehicle Assembly Building High Bays 1/2/3/4 / Main Hoist
PMN: H72-1200-01, -02
Drawing No.: EB-2508
Reference Figure: None

Find No. Part No.	Part Name	Part Function	a. Failure Mode b. Cause c. FMN d. Detection Method e. Correcting Action f. Time to Effect g. Timeframe	Failure Effect On System Performance	Failure Effect On Vehicle Systems And/Or Personnel Safety	Crit Cat
MEMOV1	Main Hoist East Metal Oxide Varistor	Becomes an electrical short when a set voltage is exceeded	Fails Open	No effect. This component is not powered when using Main hoist West drive only and will not affect operation of the hoist until the East drive has been restored to service and is selected for use.	No effect.	3
			Fails Shorted	No effect. This component is not powered when using Main hoist West drive only and will not affect operation of the hoist until the East drive has been restored to service and is selected for use.	No effect.	3
MRECT2	Main Hoist Rectifier	Converts AC power to DC power for DC contactor circuit	Fails Open	No effect. This component is not powered when using Main hoist West drive only and will not affect operation of the hoist until the East drive has been restored to service and is selected for use.	No effect.	3
			Fails Shorted	No effect. This component is not powered when using Main hoist West drive only and will not affect operation of the hoist until the East drive has been restored to service and is selected for use.	No effect.	3
MER1	Main Hoist East Resistor	Limits current in DC contactor circuit	Fails Open	No effect. This component is not powered when using Main hoist West drive only and will not affect operation of the hoist until the East drive has been restored to service and is selected for use.	No effect.	3

Table 19. **Electrical FMEA - Main Hoist Backup Mode**

System/Subsystem: 325 Ton Bridge Cranes at the Vehicle Assembly Building High Bays 1/2/3/4 / Main Hoist
PMN: H72-1200-01, -02
Drawing No.: EB-2508
Reference Figure: None

Find No. Part No.	Part Name	Part Function	a. Failure Mode b. Cause c. FMN d. Detection Method e. Correcting Action f. Time to Effect g. Timeframe	Failure Effect On System Performance	Failure Effect On Vehicle Systems And/Or Personnel Safety	Crit Cat
			Fails Shorted	No effect. This component is not powered when using Main hoist West drive only and will not affect operation of the hoist until the East drive has been restored to service and is selected for use.	No effect.	3
MER2	Main Hoist East Resistor	Discharges MEC1 after MERDY contact in circuit opens	Fails Open	No effect. This component is not powered when using Main hoist West drive only and will not affect operation of the hoist until the East drive has been restored to service and is selected for use.	No effect.	3
			Fails Shorted	No effect. This component is not powered when using Main hoist West drive only and will not affect operation of the hoist until the East drive has been restored to service and is selected for use.	No effect.	3
MEC1	Main Hoist East Capacitor	Stores charge from MEDC back EMF when MEFRDY contact opens	Fails Open	No effect. This component is not powered when using Main hoist West drive only and will not affect operation of the hoist until the East drive has been restored to service and is selected for use.	No effect.	3
			Fails Shorted	No effect. This component is not powered when using Main hoist West drive only and will not affect operation of the hoist until the East drive has been restored to service and is selected for use.	No effect.	3

Table 19. **Electrical FMEA - Main Hoist Backup Mode**

System/Subsystem: 325 Ton Bridge Cranes at the Vehicle Assembly Building High Bays 1/2/3/4 / Main Hoist
PMN: H72-1200-01, -02
Drawing No.: EB-2508
Reference Figure: None

Find No. Part No.	Part Name	Part Function	a. Failure Mode b. Cause c. FMN d. Detection Method e. Correcting Action f. Time to Effect g. Timeframe	Failure Effect On System Performance	Failure Effect On Vehicle Systems And/Or Personnel Safety	Crit Cat
MER3	Main Hoist East Resistor	Limits current in DC contactor circuit	Fails Open	No effect. This component is not powered when using Main hoist West drive only and will not affect operation of the hoist until the East drive has been restored to service and is selected for use.	No effect.	3
			Fails Shorted	No effect. This component is not powered when using Main hoist West drive only and will not affect operation of the hoist until the East drive has been restored to service and is selected for use.	No effect.	3
MEDC	Main Hoist East DC contactor Relay	Energizes when main Hoist East drive is enabled	Fails De-energized	No effect. This component is not powered when using Main hoist West drive only and will not affect operation of the hoist until the East drive has been restored to service and is selected for use.	No effect.	3
			Fails Energized	No effect. This component is not powered when using Main hoist West drive only and will not affect operation of the hoist until the East drive has been restored to service and is selected for use.	No effect.	3
	Contact	Closed to complete DC armature loop of main hoist East motor	Fails Open	No effect. This component is not powered when using Main hoist West drive only and will not affect operation of the hoist until the East drive has been restored to service and is selected for use.	No effect.	3

Table 19. **Electrical FMEA - Main Hoist Backup Mode**

System/Subsystem: 325 Ton Bridge Cranes at the Vehicle Assembly Building High Bays 1/2/3/4 / Main Hoist
PMN: H72-1200-01, -02
Drawing No.: EB-2508
Reference Figure: None

Find No. Part No.	Part Name	Part Function	a. Failure Mode b. Cause c. FMN d. Detection Method e. Correcting Action f. Time to Effect g. Timeframe	Failure Effect On System Performance	Failure Effect On Vehicle Systems And/Or Personnel Safety	Crit Cat
			Fails Closed	No effect. This component is not powered when using Main hoist West drive only and will not affect operation of the hoist until the East drive has been restored to service and is selected for use.	No effect.	3
	Contact, Normally Closed	Opens to put MER3 into relay MEDC Circuit path	Fails Open	No effect. This component is not powered when using Main hoist West drive only and will not affect operation of the hoist until the East drive has been restored to service and is selected for use.	No effect.	3
			Fails Closed	No effect. This component is not powered when using Main hoist West drive only and will not affect operation of the hoist until the East drive has been restored to service and is selected for use.	No effect.	3
	Contact	Closes to enable MEFSA and MEMCM	Fails Open	No effect. This component is not powered when using Main hoist West drive only and will not affect operation of the hoist until the East drive has been restored to service and is selected for use.	No effect.	3
			Fails Closed	No effect. This component is not powered when using Main hoist West drive only and will not affect operation of the hoist until the East drive has been restored to service and is selected for use.	No effect.	3

Table 19. **Electrical FMEA - Main Hoist Backup Mode**

System/Subsystem: 325 Ton Bridge Cranes at the Vehicle Assembly Building High Bays 1/2/3/4 / Main Hoist
PMN: H72-1200-01, -02
Drawing No.: EB-2508
Reference Figure: None

Find No. Part No.	Part Name	Part Function	a. Failure Mode b. Cause c. FMN d. Detection Method e. Correcting Action f. Time to Effect g. Timeframe	Failure Effect On System Performance	Failure Effect On Vehicle Systems And/Or Personnel Safety	Crit Cat
MWDE	Main Hoist West Drive Enable Relay	Energizes when main hoist west drive is enabled by PLC and relays MWRDY and MWFLT	Fails De-energized	MWDE contacts will not enable MWMCM or cause MWDC contactor to close DC motor armature loop. PLC will disable drives and set brakes.	No effect.	3
			Fails Energized	Requires previous failures to de-energize. Previous failures will have either faulted the motor control module or were detected by the PLC. Drives will be disabled and brakes will set.	No effect.	3
	Contact	Closes to supply power to relay MWDC circuit	Fails Open	Relay MWDC will not energize to complete DC motor armature loop or enable MWMCM, hoist will not operate and brakes will (remain) set.	No effect.	3
			Fails Closed	Requires previous failures to de-energize. Previous failure will have either faulted the motor control module or were detected by the PLC. Drives will be disabled and brakes will set.	No effect.	3
O:1,7,A2	PLC Output	Supplies power to energize relay MEDE and PLC input	Fails De-energized	No effect. This output is not used when using Main hoist West drive only and will not affect operation of the hoist until the East drive has been restored to service and is selected for use.	No effect.	3
			Fails Energized	Other PLC output will de-energize relay MEDE.	No effect.	3

Table 19. **Electrical FMEA - Main Hoist Backup Mode**

System/Subsystem: 325 Ton Bridge Cranes at the Vehicle Assembly Building High Bays 1/2/3/4 / Main Hoist
PMN: H72-1200-01, -02
Drawing No.: EB-2508
Reference Figure: None

Find No. Part No.	Part Name	Part Function	a. Failure Mode b. Cause c. FMN d. Detection Method e. Correcting Action f. Time to Effect g. Timeframe	Failure Effect On System Performance	Failure Effect On Vehicle Systems And/Or Personnel Safety	Crit Cat
O:1,8,A2	PLC Output	Supplies power to energize relay MEDE and PLC input	Fails De-energized	No effect. This output is not used when using Main hoist West drive only and will not affect operation of the hoist until the East drive has been restored to service and is selected for use.	No effect.	3
			Fails Energized	Other PLC output will de-energize relay MWDE.	No effect.	3
I:2,3,A4	PLC Input	Energizes when power is supplied to relay MEDE	Fails De-energized	No effect. This output is not used when using Main hoist West drive only and will not affect operation of the hoist until the East drive has been restored to service and is selected for use.	No effect.	3
			Fails Energized	MEDE contacts will disable MEMCM and cause MEDC contactor to open DC motor armature loop. PLC will disable drives and set brakes.	No effect.	3
MEDE	Main Hoist East Drive Enable Relay	Energizes when main Hoist East drive is enabled by PLC and relays MERDY and MEFLT	Fails De-energized	No effect. This component is not powered when using Main hoist West drive only and will not affect operation of the hoist until the East drive has been restored to service and is selected for use.	No effect.	3
			Fails Energized	No effect. MEMCM is not powered in the West drive only configuration and will not effect operation of the hoist.	No effect.	3

Table 19. **Electrical FMEA - Main Hoist Backup Mode**

System/Subsystem: 325 Ton Bridge Cranes at the Vehicle Assembly Building High Bays 1/2/3/4 / Main Hoist
PMN: H72-1200-01, -02
Drawing No.: EB-2508
Reference Figure: None

Find No. Part No.	Part Name	Part Function	a. Failure Mode b. Cause c. FMN d. Detection Method e. Correcting Action f. Time to Effect g. Timeframe	Failure Effect On System Performance	Failure Effect On Vehicle Systems And/Or Personnel Safety	Crit Cat
	Contact	Closes to supply power to relay MEDC circuit	Fails Open	No effect. This component is not powered when using Main hoist West drive only and will not affect operation of the hoist until the East drive has been restored to service and is selected for use.	No effect.	3
			Fails Closed	No effect. MEMCM is not powered in the West drive only configuration and will not effect operation of the hoist.	No effect.	3
	Contact	Closes to enable MEMCM	Fails Open	No effect. This component is not powered when using Main hoist West drive only and will not affect operation of the hoist until the East drive has been restored to service and is selected for use.	No effect.	3
			Fails Closed	No effect. MEMCM is not powered in the West drive only configuration and will not effect operation of the hoist.	No effect.	3
O:1,9,C1	PLC Output	Supplies power to main hoist drive imbalance display light on cab console	Fails De-energized	Hoist load imbalance light will not illuminate during West drive only hoist operation.	No effect.	3
			Fails Energized	Hoist imbalance light will remain illuminated continuously. Hoist will operate normally.	No effect.	3

Table 19. **Electrical FMEA - Main Hoist Backup Mode**

System/Subsystem: 325 Ton Bridge Cranes at the Vehicle Assembly Building High Bays 1/2/3/4 / Main Hoist
PMN: H72-1200-01, -02
Drawing No.: EB-2508
Reference Figure: None

Find No. Part No.	Part Name	Part Function	a. Failure Mode b. Cause c. FMN d. Detection Method e. Correcting Action f. Time to Effect g. Timeframe	Failure Effect On System Performance	Failure Effect On Vehicle Systems And/Or Personnel Safety	Crit Cat
None	Indicator Light	Illuminates to indicate main hoist has a load imbalance	Fails Open	Hoist load imbalance light will not illuminate during West drive only hoist operation.	No effect.	3
			Fails Shorted	When hook rotation is engaged, current overload will blow FU12, removing control power from Main Hoist. All drives will be disabled and all brakes will set.	No effect.	3
O:2,2,A3	PLC Output	Supplies power to energize relay MEBS	Fails De-energized	No effect. This output is not used when using Main hoist West drive only and will not affect operation of the hoist until the East drive has been restored to service and is selected for use.	No effect.	3
			Fails Energized	No effect. This output is not used when using Main hoist West drive only and will not affect operation of the hoist until the East drive has been restored to service and is selected for use.	No effect.	3
MEBS	Main Hoist East Blower Starter Relay	Energizes when commanded by PLC and MEBOL switch has not tripped	Fails De-energized	No effect. This output is not used when using Main hoist West drive only and will not affect operation of the hoist until the East drive has been restored to service and is selected for use.	No effect.	3

Table 19. **Electrical FMEA - Main Hoist Backup Mode**

System/Subsystem: 325 Ton Bridge Cranes at the Vehicle Assembly Building High Bays 1/2/3/4 / Main Hoist
PMN: H72-1200-01, -02
Drawing No.: EB-2508
Reference Figure: None

Find No. Part No.	Part Name	Part Function	a. Failure Mode b. Cause c. FMN d. Detection Method e. Correcting Action f. Time to Effect g. Timeframe	Failure Effect On System Performance	Failure Effect On Vehicle Systems And/Or Personnel Safety	Crit Cat
			Fails Energized	No effect. This output is not used when using Main hoist West drive only and will not affect operation of the hoist until the East drive has been restored to service and is selected for use.	No effect.	3
	Contacts	Close to supply power to main hoist East blower motor	Fails Open	No effect. This output is not used when using Main hoist West drive only and will not affect operation of the hoist until the East drive has been restored to service and is selected for use.	No effect.	3
			Fails Closed	No effect. This output is not used when using Main hoist West drive only and will not affect operation of the hoist until the East drive has been restored to service and is selected for use.	No effect.	3
None	Overtemp Warning Light	Indicates an above normal operating temperature in main hoist East motor	Fails Open	Loss of overtemp warning. No effect. to hoist operation since East drive is disabled during West hoist only operation	No effect.	3
			Fails Shorted	When overtemp occurs, current overload will blow FU12. Main hoist drive will be disabled.	No effect.	3
None	East Motor Shutdown Thermistor	Provides variable resistance proportional to motor temperature	Fails Open	No effect. Overtemp shutdown module will continue to energize PLC input as expected.	No effect.	3

Table 19. **Electrical FMEA - Main Hoist Backup Mode**

System/Subsystem: 325 Ton Bridge Cranes at the Vehicle Assembly Building High Bays 1/2/3/4 / Main Hoist
PMN: H72-1200-01, -02
Drawing No.: EB-2508
Reference Figure: None

Find No. Part No.	Part Name	Part Function	a. Failure Mode b. Cause c. FMN d. Detection Method e. Correcting Action f. Time to Effect g. Timeframe	Failure Effect On System Performance	Failure Effect On Vehicle Systems And/Or Personnel Safety	Crit Cat
			Fails Shorted	Overtemp module will de-energize PLC input. PLC will illuminate overtemp shutdown light but will allow continued hoist operation since East drive is already disabled during West drive only operation.	No effect.	3
MEMTS	Motogard Overtemp Module	Energize PLC input when overtemp is detected in main hoist East motor	Fails Low or No Output	Overtemp module will de-energize PLC input. PLC will illuminate overtemp shutdown light but will allow continued hoist operation since East drive is already disabled during West drive only operation	No effect.	3
			Fails High Output	No effect. Overtemp shutdown module will continue to energize PLC input as expected.	No effect.	3
I:2,3,A8	PLC Input	Energized by MEMTS when an overtemp condition occurs in main hoist East motor	Fails De-energized	PLC will illuminate overtemp shutdown light but will allow continued hoist operation since East drive is already disabled during West drive only operation.	No effect.	3
			Fails Energized	No effect. East drive has already been disabled during West drive only operation.	No effect.	3
GO:11,08	PLC Output	Sends power to main hoist East motor overtemp indication light when overtemp occurs or indicator lights are tested	Fails De-energized	Loss of motor overtemp shutdown indication.	No effect.	3

Table 19. **Electrical FMEA - Main Hoist Backup Mode**

System/Subsystem: 325 Ton Bridge Cranes at the Vehicle Assembly Building High Bays 1/2/3/4 / Main Hoist
PMN: H72-1200-01, -02
Drawing No.: EB-2508
Reference Figure: None

Find No. Part No.	Part Name	Part Function	a. Failure Mode b. Cause c. FMN d. Detection Method e. Correcting Action f. Time to Effect g. Timeframe	Failure Effect On System Performance	Failure Effect On Vehicle Systems And/Or Personnel Safety	Crit Cat
			Fails Energized	Main hoist west motor overtemp indication light will remain illuminated continuously.	No effect.	3
None	Overtemp Shutdown light	Indicates an above normal operating temperature in main hoist East motor and hoist drive have been disabled	Fails Open	Loss of overtemp shutdown indication.	No effect.	3
			Fails Shorted	When overtemp occurs, current overload will blow FU12. Hoist drive will be disabled.	No effect.	3
MWMCM (continued)	Main Hoist West Motor Control Module	Provides primary armature and field control of main hoist west motor				
	J1-8,9	DC current reference input from Delta Tau motion controller	Fails Low	MWMCM will provide too low of a current to achieve or maintain speed commanded. Delta Tau motion controller will detect following error and signal PLC to disable hoist and set brakes if motor speed does not match speed commanded.	No effect.	3
			Fails High	MWMCM will provide too high of a current to achieve or maintain speed commanded. Delta Tau motion controller will detect following error. PLC will shut down hoist drive and set brakes. Load will rise if Delta Tau controller fails to detect following error.	No effect.	3

Table 19. **Electrical FMEA - Main Hoist Backup Mode**

System/Subsystem: 325 Ton Bridge Cranes at the Vehicle Assembly Building High Bays 1/2/3/4 / Main Hoist
PMN: H72-1200-01, -02
Drawing No.: EB-2508
Reference Figure: None

Find No. Part No.	Part Name	Part Function	a. Failure Mode b. Cause c. FMN d. Detection Method e. Correcting Action f. Time to Effect g. Timeframe	Failure Effect On System Performance	Failure Effect On Vehicle Systems And/Or Personnel Safety	Crit Cat
MESRA	Scaling Resistor Assembly	Scale voltage from Fault Resistors to conform to MEFSA circuitry	Fails Open	No effect. Power to this component and East drive has been removed by opening MECB and will not affect operation of the hoist until the East drive is repaired and switched back on line.	No effect.	3
			Fails Shorted	No effect. Power to this component and East drive has been removed by opening MECB and will not affect operation of the hoist until the East drive is repaired and switched back on line.	No effect.	3
MEFSA	Main Hoist East Fault Sense Assembly	Monitor Main Hoist East motor control module current balance, disabling MEMCM if imbalance occurs				
	J1-6	provide ground for relays MERDY and MEFRDY	Fails High	No effect. Power to this component and East drive has been removed by opening MECB and will not affect operation of the hoist until the East drive is repaired and switched back on line.	No effect.	3
			Fails Low	No effect. Power to this component and East drive has been removed by opening MECB and will not affect operation of the hoist until the East drive is repaired and switched back on line.	No effect.	3

Table 19. **Electrical FMEA - Main Hoist Backup Mode**

System/Subsystem: 325 Ton Bridge Cranes at the Vehicle Assembly Building High Bays 1/2/3/4 / Main Hoist
PMN: H72-1200-01, -02
Drawing No.: EB-2508
Reference Figure: None

Find No. Part No.	Part Name	Part Function	a. Failure Mode b. Cause c. FMN d. Detection Method e. Correcting Action f. Time to Effect g. Timeframe	Failure Effect On System Performance	Failure Effect On Vehicle Systems And/Or Personnel Safety	Crit Cat
	J2-12	Provide enable signal for MEMCM	Fails High	No effect. Power to this component and East drive has been removed by opening MECB and will not affect operation of the hoist until the East drive is repaired and switched back on line.	No effect.	3
			Fails Low	No effect. Power to this component and East drive has been removed by opening MECB and will not affect operation of the hoist until the East drive is repaired and switched back on line.	No effect.	3
	J2-5	Provide power for sensing contacts of relay MEDC	Fails Low or No Output	No effect. Power to this component and East drive has been removed by opening MECB and will not affect operation of the hoist until the East drive is repaired and switched back on line.	No effect.	3
	J2-6	Input from sensing contacts of relay MEDC	Fails Low	No effect. Power to this component and East drive has been removed by opening MECB and will not affect operation of the hoist until the East drive is repaired and switched back on line.	No effect.	3
			Fails High	No effect. Power to this component and East drive has been removed by opening MECB and will not affect operation of the hoist until the East drive is repaired and switched back on line.	No effect.	3

Table 19. **Electrical FMEA - Main Hoist Backup Mode**

System/Subsystem: 325 Ton Bridge Cranes at the Vehicle Assembly Building High Bays 1/2/3/4 / Main Hoist
PMN: H72-1200-01, -02
Drawing No.: EB-2508
Reference Figure: None

Find No. Part No.	Part Name	Part Function	a. Failure Mode b. Cause c. FMN d. Detection Method e. Correcting Action f. Time to Effect g. Timeframe	Failure Effect On System Performance	Failure Effect On Vehicle Systems And/Or Personnel Safety	Crit Cat
MERDY	Relay	Energizes when MEMCM is ready and MEFSA J1-6 goes low	Fails De-energized	No effect. Power to this component and East drive has been removed by opening MECB and will not affect operation of the hoist until the East drive is repaired and switched back on line.	No effect.	3
			Fails Energized	No effect. Power to this component and East drive has been removed by opening MECB and will not affect operation of the hoist until the East drive is repaired and switched back on line.	No effect.	3
	Contact	Closes to energize relay MEDC circuit	Fails Open	No effect. Power to this component and East drive has been removed by opening MECB and will not affect operation of the hoist until the East drive is repaired and switched back on line.	No effect.	3
			Fails Closed	No effect. Power to this component and East drive has been removed by opening MECB and will not affect operation of the hoist until the East drive is repaired and switched back on line.	No effect.	3
	Contact	Closes to energize relay MEDE	Fails Open	No effect. Power to this component and East drive has been removed by opening MECB and will not affect operation of the hoist until the East drive is repaired and switched back on line.	No effect.	3

Table 19. **Electrical FMEA - Main Hoist Backup Mode**

System/Subsystem: 325 Ton Bridge Cranes at the Vehicle Assembly Building High Bays 1/2/3/4 / Main Hoist
PMN: H72-1200-01, -02
Drawing No.: EB-2508
Reference Figure: None

Find No. Part No.	Part Name	Part Function	a. Failure Mode b. Cause c. FMN d. Detection Method e. Correcting Action f. Time to Effect g. Timeframe	Failure Effect On System Performance	Failure Effect On Vehicle Systems And/Or Personnel Safety	Crit Cat
			Fails Closed	No effect. Power to this component and East drive has been removed by opening MECB and will not affect operation of the hoist until the East drive is repaired and switched back on line.	No effect.	3
	Contact	Opens to complete Aux. current reference circuit	Fails Open	No effect. Power to this component and East drive has been removed by opening MECB and will not affect operation of the hoist until the East drive is repaired and switched back on line.	No effect.	3
			Fails Closed	No effect. Power to this component and East drive has been removed by opening MECB and will not affect operation of the hoist until the East drive is repaired and switched back on line.	No effect.	3
MEFRDY	Relay	Energizes when MEMCM is ready and MEFSA J1-6 goes low	Fails De-energized	No effect. Power to this component and East drive has been removed by opening MECB and will not affect operation of the hoist until the East drive is repaired and switched back on line.	No effect.	3
			Fails Energized	No effect. Power to this component and East drive has been removed by opening MECB and will not affect operation of the hoist until the East drive is repaired and switched back on line.	No effect.	3

Table 19. **Electrical FMEA - Main Hoist Backup Mode**

System/Subsystem: 325 Ton Bridge Cranes at the Vehicle Assembly Building High Bays 1/2/3/4 / Main Hoist
PMN: H72-1200-01, -02
Drawing No.: EB-2508
Reference Figure: None

Find No. Part No.	Part Name	Part Function	a. Failure Mode b. Cause c. FMN d. Detection Method e. Correcting Action f. Time to Effect g. Timeframe	Failure Effect On System Performance	Failure Effect On Vehicle Systems And/Or Personnel Safety	Crit Cat
	Contact	Closes to bypass R-C portion of MWDC circuit	Fails Open	No effect. Power to this component and East drive has been removed by opening MECB and will not affect operation of the hoist until the East drive is repaired and switched back on line.	No effect.	3
			Fails Closed	No effect. Power to this component and East drive has been removed by opening MECB and will not affect operation of the hoist until the East drive is repaired and switched back on line.	No effect.	3
O:0,8,02	PLC output	Analog input to MEMCM to set current for torque proving	Fails High	No effect. Power to this component and East drive has been removed by opening MECB and will not affect operation of the hoist until the East drive is repaired and switched back on line.	No effect.	3
			Fails Low or No Output	No effect. Power to this component and East drive has been removed by opening MECB and will not affect operation of the hoist until the East drive is repaired and switched back on line.	No effect.	3
None	Resistor 20K Ohms	Prevent PLC output from “floating” when an output is not being provided by the PLC	Fails Open	No effect. Power to this component and East drive has been removed by opening MECB and will not affect operation of the hoist until the East drive is repaired and switched back on line.	No effect.	3

Table 19. **Electrical FMEA - Main Hoist Backup Mode**

System/Subsystem: 325 Ton Bridge Cranes at the Vehicle Assembly Building High Bays 1/2/3/4 / Main Hoist
PMN: H72-1200-01, -02
Drawing No.: EB-2508
Reference Figure: None

Find No. Part No.	Part Name	Part Function	a. Failure Mode b. Cause c. FMN d. Detection Method e. Correcting Action f. Time to Effect g. Timeframe	Failure Effect On System Performance	Failure Effect On Vehicle Systems And/Or Personnel Safety	Crit Cat
			Fails Shorted	No effect. Power to this component and East drive has been removed by opening MECB and will not affect operation of the hoist until the East drive is repaired and switched back on line.	No effect.	3
MEFLT	Main Hoist East fault relay	Energizes when MEMCM J1-20 goes low, signaling MEMCM has a fault	Fails De-energized	No effect. Power to this component and East drive has been removed by opening MECB and will not affect operation of the hoist until the East drive is repaired and switched back on line.	No effect.	3
			Fails Energized	No effect. Power to this component and East drive has been removed by opening MECB and will not affect operation of the hoist until the East drive is repaired and switched back on line.	No effect.	3
	Contact	Closes to energize relay MEDE	Fails Open	No effect. Power to this component and East drive has been removed by opening MECB and will not affect operation of the hoist until the East drive is repaired and switched back on line.	No effect.	3
			Fails Closed	No effect. Power to this component and East drive has been removed by opening MECB and will not affect operation of the hoist until the East drive is repaired and switched back on line.	No effect.	3

Table 19. **Electrical FMEA - Main Hoist Backup Mode**

System/Subsystem: 325 Ton Bridge Cranes at the Vehicle Assembly Building High Bays 1/2/3/4 / Main Hoist
PMN: H72-1200-01, -02
Drawing No.: EB-2508
Reference Figure: None

Find No. Part No.	Part Name	Part Function	a. Failure Mode b. Cause c. FMN d. Detection Method e. Correcting Action f. Time to Effect g. Timeframe	Failure Effect On System Performance	Failure Effect On Vehicle Systems And/Or Personnel Safety	Crit Cat
O:1,5,A3	PLC Output	Energizes input J2-6, run, of MEMCM	Fails De-energized	No effect. Power to this component and East drive has been removed by opening MECB and will not affect operation of the hoist until the East drive is repaired and switched back on line.	No effect.	3
			Fails Energized	No effect. Power to this component and East drive has been removed by opening MECB and will not affect operation of the hoist until the East drive is repaired and switched back on line.	No effect.	3
O:1,5,A4	PLC Output	Energizes input J2-8, Aux. torque enable, of MEMCM for torque proving	Fails De-energized	No effect. Power to this component and East drive has been removed by opening MECB and will not affect operation of the hoist until the East drive is repaired and switched back on line.	No effect.	3
			Fails Energized	No effect. Power to this component and East drive has been removed by opening MECB and will not affect operation of the hoist until the East drive is repaired and switched back on line.	No effect.	3
I:1,4,C1	PLC input	De-energizes when East SCR overtemp sensor contacts open	Fails De-energized	No effect. Power to this component and East drive has been removed by opening MECB and will not affect operation of the hoist until the East drive is repaired and switched back on line.	No effect.	3

Table 19. **Electrical FMEA - Main Hoist Backup Mode**

System/Subsystem: 325 Ton Bridge Cranes at the Vehicle Assembly Building High Bays 1/2/3/4 / Main Hoist
PMN: H72-1200-01, -02
Drawing No.: EB-2508
Reference Figure: None

Find No. Part No.	Part Name	Part Function	a. Failure Mode b. Cause c. FMN d. Detection Method e. Correcting Action f. Time to Effect g. Timeframe	Failure Effect On System Performance	Failure Effect On Vehicle Systems And/Or Personnel Safety	Crit Cat
			Fails Energized	No effect. Power to this component and East drive has been removed by opening MECB and will not affect operation of the hoist until the East drive is repaired and switched back on line.	No effect.	3
ESCR OT	East SCR over Temperature Sensor	Contact opens when temperature of East SCRs exceeds a set value	Fails Open	No effect. Power to this component and East drive has been removed by opening MECB and will not affect operation of the hoist until the East drive is repaired and switched back on line.	No effect.	3
			Fails Closed	No effect. Power to this component and East drive has been removed by opening MECB and will not affect operation of the hoist until the East drive is repaired and switched back on line.	No effect.	3
I:1,4,D1	PLC Input	Energized by MEMCM when MEMCM starts to run and commands the brakes to be released	Fails De-energized	No effect. Power to this component and East drive has been removed by opening MECB and will not affect operation of the hoist until the East drive is repaired and switched back on line.	No effect.	3
			Fails Energized	No effect. Power to this component and East drive has been removed by opening MECB and will not affect operation of the hoist until the East drive is repaired and switched back on line.	No effect.	3

Table 19. **Electrical FMEA - Main Hoist Backup Mode**

System/Subsystem: 325 Ton Bridge Cranes at the Vehicle Assembly Building High Bays 1/2/3/4 / Main Hoist
PMN: H72-1200-01, -02
Drawing No.: EB-2508
Reference Figure: None

Find No. Part No.	Part Name	Part Function	a. Failure Mode b. Cause c. FMN d. Detection Method e. Correcting Action f. Time to Effect g. Timeframe	Failure Effect On System Performance	Failure Effect On Vehicle Systems And/Or Personnel Safety	Crit Cat
MEMCM (continued)	Main Hoist East motor control module	Provides primary armature and field control of main hoist East motor				
	J1-8, 9	DC current reference input from Delta Tau motion controller	Fails Low	No effect. Power to this component and East drive has been removed by opening MECB and will not affect operation of the hoist until the East drive is repaired and switched back on line.	No effect.	3
			Fails High	No effect. Power to this component and East drive has been removed by opening MECB and will not affect operation of the hoist until the East drive is repaired and switched back on line.	No effect.	3
	J1-12	Auxiliary current reference input from PLC	Fails High	No effect. Power to this component and East drive has been removed by opening MECB and will not affect operation of the hoist until the East drive is repaired and switched back on line.	No effect.	3
			Fails Low or No output	No effect. Power to this component and East drive has been removed by opening MECB and will not affect operation of the hoist until the East drive is repaired and switched back on line.	No effect.	3

Table 19. **Electrical FMEA - Main Hoist Backup Mode**

System/Subsystem: 325 Ton Bridge Cranes at the Vehicle Assembly Building High Bays 1/2/3/4 / Main Hoist
PMN: H72-1200-01, -02
Drawing No.: EB-2508
Reference Figure: None

Find No. Part No.	Part Name	Part Function	a. Failure Mode b. Cause c. FMN d. Detection Method e. Correcting Action f. Time to Effect g. Timeframe	Failure Effect On System Performance	Failure Effect On Vehicle Systems And/Or Personnel Safety	Crit Cat
	J1-14	+15 volts DC output for Main Hoist East fault sense assembly	Fails Low	No effect. Power to this component and East drive has been removed by opening MECB and will not affect operation of the hoist until the East drive is repaired and switched back on line.	No effect.	3
			Fails High	No effect. Power to this component and East drive has been removed by opening MECB and will not affect operation of the hoist until the East drive is repaired and switched back on line.	No effect.	3
	J1-17	-15 volts DC output for Main Hoist East Fault Sense Assembly	Fails Low	No effect. Power to this component and East drive has been removed by opening MECB and will not affect operation of the hoist until the East drive is repaired and switched back on line.	No effect.	3
			Fails High	No effect. Power to this component and East drive has been removed by opening MECB and will not affect operation of the hoist until the East drive is repaired and switched back on line.	No effect.	3
	J1-20	Motor Control Fault Output	Fails Low	No effect. Power to this component and East drive has been removed by opening MECB and will not affect operation of the hoist until the East drive is repaired and switched back on line.	No effect.	3

Table 19. **Electrical FMEA - Main Hoist Backup Mode**

System/Subsystem: 325 Ton Bridge Cranes at the Vehicle Assembly Building High Bays 1/2/3/4 / Main Hoist
PMN: H72-1200-01, -02
Drawing No.: EB-2508
Reference Figure: None

Find No. Part No.	Part Name	Part Function	a. Failure Mode b. Cause c. FMN d. Detection Method e. Correcting Action f. Time to Effect g. Timeframe	Failure Effect On System Performance	Failure Effect On Vehicle Systems And/Or Personnel Safety	Crit Cat
			Fails High	No effect. Power to this component and East drive has been removed by opening MECB and will not affect operation of the hoist until the East drive is repaired and switched back on line.	No effect.	3
	J2-4	Drive enable input from Fault Sense Assembly and relay MEDE.	Fails Low	No effect. Power to this component and East drive has been removed by opening MECB and will not affect operation of the hoist until the East drive is repaired and switched back on line.	No effect.	3
			Fails High	No effect. Power to this component and East drive has been removed by opening MECB and will not affect operation of the hoist until the East drive is repaired and switched back on line.	No effect.	3
	J2-6	Drive run input from PLC	Fails Low	No effect. Power to this component and East drive has been removed by opening MECB and will not affect operation of the hoist until the East drive is repaired and switched back on line.	No effect.	3
			Fails High	No effect. Power to this component and East drive has been removed by opening MECB and will not affect operation of the hoist until the East drive is repaired and switched back on line.	No effect.	3

Table 19. **Electrical FMEA - Main Hoist Backup Mode**

System/Subsystem: 325 Ton Bridge Cranes at the Vehicle Assembly Building High Bays 1/2/3/4 / Main Hoist
PMN: H72-1200-01, -02
Drawing No.: EB-2508
Reference Figure: None

Find No. Part No.	Part Name	Part Function	a. Failure Mode b. Cause c. FMN d. Detection Method e. Correcting Action f. Time to Effect g. Timeframe	Failure Effect On System Performance	Failure Effect On Vehicle Systems And/Or Personnel Safety	Crit Cat
	J2-8	Auxiliary torque enable input from PLC	Fails Low	No effect. Power to this component and East drive has been removed by opening MECB and will not affect operation of the hoist until the East drive is repaired and switched back on line.	No effect.	3
			Fails Energized	No effect. Power to this component and East drive has been removed by opening MECB and will not affect operation of the hoist until the East drive is repaired and switched back on line.	No effect.	3
	J2-11	External Fault input from ESCR OT sensor	Fails Low	No effect. Power to this component and East drive has been removed by opening MECB and will not affect operation of the hoist until the East drive is repaired and switched back on line.	No effect.	3
			Fails Closed	No effect. Power to this component and East drive has been removed by opening MECB and will not affect operation of the hoist until the East drive is repaired and switched back on line.	No effect.	3
	J2-15	Ready relay output to relay MERDY and MEFRDY	Fails Low	No effect. Power to this component and East drive has been removed by opening MECB and will not affect operation of the hoist until the East drive is repaired and switched back on line.	No effect.	3

Table 19. **Electrical FMEA - Main Hoist Backup Mode**

System/Subsystem: 325 Ton Bridge Cranes at the Vehicle Assembly Building High Bays 1/2/3/4 / Main Hoist
PMN: H72-1200-01, -02
Drawing No.: EB-2508
Reference Figure: None

Find No. Part No.	Part Name	Part Function	a. Failure Mode b. Cause c. FMN d. Detection Method e. Correcting Action f. Time to Effect g. Timeframe	Failure Effect On System Performance	Failure Effect On Vehicle Systems And/Or Personnel Safety	Crit Cat
			Fails High	No effect. Power to this component and East drive has been removed by opening MECB and will not affect operation of the hoist until the East drive is repaired and switched back on line.	No effect.	3
	J2-18	+25 Volt DC output to Fault Sense Assembly, relay MEFLT and ESCR OT switch	Fails Low	No effect. Power to this component and East drive has been removed by opening MECB and will not affect operation of the hoist until the East drive is repaired and switched back on line.	No effect.	3
			Fails High	No effect. Power to this component and East drive has been removed by opening MECB and will not affect operation of the hoist until the East drive is repaired and switched back on line.	No effect.	3

Electrical FMEA, Auxiliary Hoist Primary Mode
Wire harnesses, cables, or connectors were not analyzed in the Electrical FMEA for this system since a single failure (open or short) could not result in the loss of life or vehicle. (Ref. NSTS 22206, Paragraph 4.4.1.b.2)

This FMEA section references Ederer drawing EB-2508, specifically the following sheets:

Sheet	Title
20	AUX. Hoist West Motor Control Elementary
21	AUX. Hoist East Motor Control Elementary
22	AUX. Hoist Control Elementary
23	AUX. Hoist Control Elementary
24	AUX. Hoist Control Elementary
25	AUX. Hoist Control Elementary
26	AUX. Hoist West Motor Control Electronics Elementary
27	AUX. Hoist East Motor Control Electronics Elementary
28	AUX. Hoist Encoder Positioning System
29	AUX. Hoist Upper Block Weighting System #1
30	AUX. Hoist Upper Block Weighting System #2
31	AUX. Hoist Lower Block Rotate Motor Control Elementary
32	AUX. Hoist Lower Block Rotate Control Elementary
33	AUX. Hoist Lower Block Rotate Position System

Table 20. **Electrical FMEA - Auxiliary Hoist Primary Mode**

System/Subsystem: 325 Ton Bridge Cranes at the Vehicle Assembly Building High Bays 1/2/3/4 / Auxiliary Hoist
PMN: H72-1200-01, -02
Drawing No.: EB-2508
Reference Figure: None

Find No. Part No.	Part Name	Part Function	a. Failure Mode b. Cause c. FMN d. Detection Method e. Correcting Action f. Time to Effect g. Timeframe	Failure Effect On System Performance	Failure Effect On Vehicle Systems And/Or Personnel Safety	Crit Cat
AWCB	Circuit Breaker	Protects Circuitry from overloads in Auxiliary Hoist West Drive circuit	Prematurely Operates	Loss of power to Auxiliary Hoist West Motor Control Module. Phase monitor relay will drop out READY relays, disabling drive. PLC will detect drive not enabled and set brakes.	No effect.	3
			Fails to Operate	Upstream 500A Main circuit Breaker will trip. Loss of power to crane. All brakes will set. Requires previous failure to cause overload.	No effect.	3
AWIT	Isolation Transformer	Isolates Auxiliary Hoist West Drive circuit to reduce electrical noise and interference	Fails Open	Loss of one or more power phases. Phase monitor relay will drop out READY relays, disabling drive. PLC will detect drive not enabled and set brakes.	No effect.	3
			Fails Shorted	Overload will trip AWCB. Phase monitor relay will drop out READY relays, disabling drive. PLC will detect drive not enabled and set brakes.	No effect.	3
AWFU1, AWFU2, AWFU3	Fuse	Protects circuitry from overloads in Auxiliary Hoist West Motor Blower circuit	Prematurely Operates	Loss of one or more power phases. Phase monitor relay will drop out READY relays, disabling drive. PLC will detect drive not enabled and set brakes.	No effect.	3
			Fails to Operate	Associated fuse in current loop will protect against overloads. Phase monitor relay will drop out READY relays, disabling drive. PLC will detect drive not enabled and set brakes. Requires previous failure to cause overload.	No effect.	3

Table 20. **Electrical FMEA - Auxiliary Hoist Primary Mode**

System/Subsystem: 325 Ton Bridge Cranes at the Vehicle Assembly Building High Bays 1/2/3/4 / Auxiliary Hoist
PMN: H72-1200-01, -02
Drawing No.: EB-2508
Reference Figure: None

Find No. Part No.	Part Name	Part Function	a. Failure Mode b. Cause c. FMN d. Detection Method e. Correcting Action f. Time to Effect g. Timeframe	Failure Effect On System Performance	Failure Effect On Vehicle Systems And/Or Personnel Safety	Crit Cat
AWPM	Auxiliary West Phase Monitor Relay	Monitors 3 phase power for proper phase relationships	Fails De-energized	Contact will not close to energize relays AWRDY and AWFRDY. West Drive will be disabled. PLC will detect drive not enabled and set brakes.	No effect.	3
			Fails Energized	Improper phase or voltage imbalance will be detected by AWFSA. AWFSA will disable west drive. PLC will detect drive not enabled and set brakes. Requires previous failure to cause improper phase or voltage.	No effect.	3
	Contact	Opens to de-energize relays AWRDY, AWFRDY if improper phase relationship is detected	Fails Open	Relays AWRDY and AWFRDY will not be energized. West drive will be disabled. PLC will detect drive not enabled and set brakes.	No effect.	3
			Fails Closed	Improper phase or voltage imbalance will be detected by AWFSA. AWFSA will disable west drive. PLC will detect drive not enabled and set brakes. Requires previous failure to cause improper phase or voltage.	No effect.	3
AWBOL	Overload Switch	Switch contact opens when excessive current is detected in Auxiliary Hoist West Motor blower circuit	Prematurely Operates	AWBOL contact will open, de-energizing relay AWBS. Loss of power to Auxiliary Hoist West blower motor and relay AWBR. AWBR contact will de-energize PLC input. PLC will set error bit. Error will cause hoist to decelerate to stop and brakes to set.	No effect.	3

Table 20. **Electrical FMEA - Auxiliary Hoist Primary Mode**

System/Subsystem: 325 Ton Bridge Cranes at the Vehicle Assembly Building High Bays 1/2/3/4 / Auxiliary Hoist
PMN: H72-1200-01, -02
Drawing No.: EB-2508
Reference Figure: None

Find No. Part No.	Part Name	Part Function	a. Failure Mode b. Cause c. FMN d. Detection Method e. Correcting Action f. Time to Effect g. Timeframe	Failure Effect On System Performance	Failure Effect On Vehicle Systems And/Or Personnel Safety	Crit Cat
			Fails to Operate	AWFU1-3 will protect against overload. Hoist drive will continue to operate. Motor overtemp sensors will detect if hoist motor overheats. Requires previous failure to cause overload.	No effect.	3
	Contact	Opens to de-energize PLC input	Fails Open	Relay AWBS will be de-energized. Loss of power to Auxiliary Hoist West Blower Motor and relay AWBR. AWBR contact will de-energize PLC input. PLC will set error bit. Error will cause hoist to decelerate to stop and brakes to set.	No effect.	3
			Fails Closed	Relay AWBS will not de-energize when excessive current is running through hoist west motor blower. AWFU1-3 will protect circuitry from overload. Motor overtemp sensors will detect if hoist motor overheats. Requires previous failure to cause overload.	No effect.	3
AWBR	Auxiliary West Blower Relay	Energizes when Auxiliary Hoist West blower is powered	Fails De-energized	AWBR contact will open, de-energizing PLC input. PLC will set error bit. PLC will decelerate hoist to stop and set brakes.	No effect.	3
			Fails Energized	Loss of power to Auxiliary Hoist West Blower. Hoist drive will continue to operate. Motor overtemp sensors will detect if Hoist Motor overheats. Requires previous failure to cause loss of power.	No effect.	3

Table 20. **Electrical FMEA - Auxiliary Hoist Primary Mode**

System/Subsystem: 325 Ton Bridge Cranes at the Vehicle Assembly Building High Bays 1/2/3/4 / Auxiliary Hoist
PMN: H72-1200-01, -02
Drawing No.: EB-2508
Reference Figure: None

Find No. Part No.	Part Name	Part Function	a. Failure Mode b. Cause c. FMN d. Detection Method e. Correcting Action f. Time to Effect g. Timeframe	Failure Effect On System Performance	Failure Effect On Vehicle Systems And/Or Personnel Safety	Crit Cat
	Contact	Opens to de-energize PLC input	Fails Open	PLC input will be de-energized. PLC will set error bit. PLC will decelerate hoist to stop and set brakes.	No effect.	3
			Fails Closed	PLC input will not be de-energized when relay AWBR de-energizes. Hoist drive will continue to operate. Motor overtemp sensors will detect if hoist motor overheats. Requires previous failure to cause loss of power to blower motor.	No effect.	3
AWBM	Auxiliary Hoist West Blower Motor	Provide cooling airflow for Auxiliary Hoist West motor	Fails Open	Loss of cooling air through hoist motor. Motor overtemp sensors will disable hoist drive if hoist motor overheats.	No effect.	3
			Fails Shorted	Current overload will either trip blower overload switch or blow AWFU1-3. Blower overload trip will de-energize relay AWBR, removing power from blower. Phase voltage monitor will detect voltage loss and de-energize PLC input. PLC will set error bit. PLC will decelerate hoist to a stop and set brakes.	No effect.	3
None	Resistor	Provides voltage input for Fault Sense Assembly	Fails Open	Voltage imbalance will be detected by AWFSA. AWFSA will disable drive and set brakes. Delta Tau motion control board servoing will ensure motor operates at commanded speed.	No effect.	3

Table 20. **Electrical FMEA - Auxiliary Hoist Primary Mode**

System/Subsystem: 325 Ton Bridge Cranes at the Vehicle Assembly Building High Bays 1/2/3/4 / Auxiliary Hoist
PMN: H72-1200-01, -02
Drawing No.: EB-2508
Reference Figure: None

Find No. Part No.	Part Name	Part Function	a. Failure Mode b. Cause c. FMN d. Detection Method e. Correcting Action f. Time to Effect g. Timeframe	Failure Effect On System Performance	Failure Effect On Vehicle Systems And/Or Personnel Safety	Crit Cat
			Fails Short	Voltage imbalance will be detected by AWFSA. AWFSA will disable drive and set brakes. Delta Tau motion control board servoing will ensure motor operates at commanded speed.	No effect.	3
None	Tachometer	Generates voltage proportional to rotational speed of west Auxiliary Hoist motor	Fails Low or No Output	Loss of overspeed protection from AWMCM. PLC will detect mismatch between encoder and tachometer feedback. PLC will disable drive and set brakes.	No effect.	3
			Fails High Output	AWMCM will fault on overspeed, disabling drive. PLC will detect drive not enabled and set brakes, or PLC will detect mismatch between encoder and tachometer feedback. PLC will disable drive and set brakes.	No effect.	3
ATR1	Resistor	Provide tachometer voltage scaling for PLC input	Fails Open	Loss of tachometer feedback to PLC. PLC will detect mismatch between encoder and tachometer feedback. PLC will disable drive and set brakes.	No effect.	3
			Fails Shorted	Tachometer feedback will not be scaled down for PLC input. PLC will detect mismatch between encoder and tachometer feedback. PLC will disable drive and set brakes.	No effect.	3

Table 20. **Electrical FMEA - Auxiliary Hoist Primary Mode**

System/Subsystem: 325 Ton Bridge Cranes at the Vehicle Assembly Building High Bays 1/2/3/4 / Auxiliary Hoist
PMN: H72-1200-01, -02

Drawing No.: EB-2508
Reference Figure: None

Find No. Part No.	Part Name	Part Function	a. Failure Mode b. Cause c. FMN d. Detection Method e. Correcting Action f. Time to Effect g. Timeframe	Failure Effect On System Performance	Failure Effect On Vehicle Systems And/Or Personnel Safety	Crit Cat
ATR2	Resistor	Provides tachometer voltage scaling for PLC input	Fails Open	Tachometer feedback will not be scaled down for PLC input. PLC will detect mismatch between encoder and tachometer feedback. PLC will disable drive and set brakes.	No effect.	3
			Fails Shorted	Loss of tachometer feedback to PLC. PLC will detect mismatch between encoder and tachometer feedback. PLC will disable drive and set brakes.	No effect.	3
I:2,7,I8	PLC Input	Provides interface for tachometer feedback voltage into PLC	Fails Low or No Input	Loss of tachometer feedback to PLC. PLC will detect mismatch between encoder and tachometer feedback. PLC will disable drive and set brakes.	No effect.	3
			Fails High Input	PLC will detect mismatch between encoder and tachometer feedback. PLC will disable drive and set brakes.	No effect.	3
AWMCM	Auxiliary Hoist West Motor Control Module	Provides primary armature and field control of west Auxiliary Hoist motor				
	Armature current outputs A1, A2	Provides current for hoist motor armature windings	Fails Low or No Output	Delta Tau motion controller will increase current reference to operate hoist at commanded speed. Delta Tau motion controller will detect following error if motor speed does not match speed commanded. PLC will detect current imbalance, shut down drives and set brakes.	No effect.	3

Table 20. **Electrical FMEA - Auxiliary Hoist Primary Mode**

System/Subsystem: 325 Ton Bridge Cranes at the Vehicle Assembly Building High Bays 1/2/3/4 / Auxiliary Hoist
PMN: H72-1200-01, -02
Drawing No.: EB-2508
Reference Figure: None

Find No. Part No.	Part Name	Part Function	a. Failure Mode b. Cause c. FMN d. Detection Method e. Correcting Action f. Time to Effect g. Timeframe	Failure Effect On System Performance	Failure Effect On Vehicle Systems And/Or Personnel Safety	Crit Cat
			Fails High Output	Delta Tau motion controller will increase current reference to operate hoist at commanded speed. Delta Tau motion controller will detect following error if motor speed does not match speed commanded. PLC will detect current imbalance, shut down hoist drives and set brakes.	No effect.	3
	Field current outputs F1, F2	Provides current for hoist motor field windings	Fails Low or No Output	PLC will detect loss of field current, shut down hoist and set brakes. Motor control module will also detect loss of field current and shut down. PLC will detect motor control module not ready and set brakes. Delta Tau motion control board will attempt to servo hoist motors to commanded speed. If motors do not reach or maintain commanded speed, Delta Tau motion control board will detect following error. Drive will be disabled and brakes set.	No effect.	3
			Fails High Output	Delta Tau motion control board will attempt to servo hoist motor to commanded speed. If motors do not reach or maintain commanded speed, Delta Tau motion control board will detect following error, drive will disabled and brakes will set. High field current will cause motor to overheat. PLC will detect overheat condition and disable hoist and set brakes.	No effect.	3

Table 20. **Electrical FMEA - Auxiliary Hoist Primary Mode**

System/Subsystem: 325 Ton Bridge Cranes at the Vehicle Assembly Building High Bays 1/2/3/4 / Auxiliary Hoist
PMN: H72-1200-01, -02

Drawing No.: EB-2508
Reference Figure: None

Find No. Part No.	Part Name	Part Function	a. Failure Mode b. Cause c. FMN d. Detection Method e. Correcting Action f. Time to Effect g. Timeframe	Failure Effect On System Performance	Failure Effect On Vehicle Systems And/Or Personnel Safety	Crit Cat
AWCA	Auxiliary Hoist West Cable Adapter	Provides interface between PLC and AWMCM, and field current feedback to AWMCM				
	15, Armature Current Feedback	Provides current feedback to PLC input	Fails No Output	Torque will not be proved. PLC will not allow hoist to operate. If failure occurs while hoist is operating, PLC will detect load imbalance, disable hoist and set brakes. Delta Tau motion controller will also detect loss of armature current feedback, disable hoist and set brakes.	No effect.	3
	19, Field Current Feedback	Provides field current feedback to PLC input	Fails No Output	PLC will detect loss of field current, shut down hoist and set brakes. Delta Tau motion control board will attempt to servo hoist motors to commanded speed. If motors do not reach or maintain commanded speed, Delta Tau motion control board will detect following error, drive will be disabled and brakes will set.	No effect.	3

Table 20. **Electrical FMEA - Auxiliary Hoist Primary Mode**

System/Subsystem: 325 Ton Bridge Cranes at the Vehicle Assembly Building High Bays 1/2/3/4 / Auxiliary Hoist
PMN: H72-1200-01, -02
Drawing No.: EB-2508
Reference Figure: None

Find No. Part No.	Part Name	Part Function	a. Failure Mode b. Cause c. FMN d. Detection Method e. Correcting Action f. Time to Effect g. Timeframe	Failure Effect On System Performance	Failure Effect On Vehicle Systems And/Or Personnel Safety	Crit Cat
	5, Field Current Reference Signal	Provides interface for field current command from PLC to AWMCM	Fails No Output	PLC will detect loss of field current, shut down hoist and set brakes. Motor control module will also detect loss of field current and shut down. PLC will detect motor control module not ready and set brakes. Delta Tau motion control board will attempt to servo hoist motors to commanded speed. If motors do not reach or maintain commanded speed, Delta Tau motion control board will detect following error, drive will be disabled and brakes will set.	No effect.	3
AWFB	Auxiliary Hoist West Field Board	Measures current in west motor field loop and sends feedback signal to AWMCM firing board				
	4, Field Current Feedback	Provides current feedback to AWMCM	Fails Low or No Output	Motor control module will increase field current to compensate for low feedback. Imbalance between west and East motors will cause an armature imbalance. PLC will detect imbalance, shut down drives and set brakes or PLC will detect loss of field current, shut down hoist and set brakes. Delta Tau motion control board will attempt to servo hoist motors to commanded speed. If motors do not reach or maintain commanded speed, Delta Tau motion control board will detect following error, drive will be disabled and brakes will set.	No effect.	3

Table 20. **Electrical FMEA - Auxiliary Hoist Primary Mode**

System/Subsystem: 325 Ton Bridge Cranes at the Vehicle Assembly Building High Bays 1/2/3/4 / Auxiliary Hoist
PMN: H72-1200-01, -02
Drawing No.: EB-2508
Reference Figure: None

Find No. Part No.	Part Name	Part Function	a. Failure Mode b. Cause c. FMN d. Detection Method e. Correcting Action f. Time to Effect g. Timeframe	Failure Effect On System Performance	Failure Effect On Vehicle Systems And/Or Personnel Safety	Crit Cat
			Fails High Output	Motor control module will reduce field current to compensate. PLC will detect loss of field current, shut down hoist and set brakes. Delta Tau motion control board will attempt to servo hoist motors to commanded speed. If motors do not reach or maintain commanded speed, Delta Tau motion control board will detect following error, drive will be disabled and brakes will set.	No effect.	3
O:0,5,O3	PLC Output	Provides field current reference signal to AWCA	Fails Low or No Output	PLC will detect loss of field current, shut down hoist and set brakes. Delta Tau motion control board will attempt to servo hoist motors to commanded speed. If motors do not reach or maintain commanded speed, Delta Tau motion control board will detect following error, drive will be disabled and brakes will set.	No effect.	3
			Fails High Output	Delta Tau motion control board will attempt to servo hoist motors to commanded speed. If motors do not reach or maintain commanded speed, Delta Tau motion control board will detect following error, drive will be disabled and brakes will set. High field current will cause motor to overheat. PLC will detect overheat condition and disable hoist and set brakes.	No effect.	3

Table 20. **Electrical FMEA - Auxiliary Hoist Primary Mode**

System/Subsystem: 325 Ton Bridge Cranes at the Vehicle Assembly Building High Bays 1/2/3/4 / Auxiliary Hoist
PMN: H72-1200-01, -02
Drawing No.: EB-2508
Reference Figure: None

Find No. Part No.	Part Name	Part Function	a. Failure Mode b. Cause c. FMN d. Detection Method e. Correcting Action f. Time to Effect g. Timeframe	Failure Effect On System Performance	Failure Effect On Vehicle Systems And/Or Personnel Safety	Crit Cat
None	Resistor 20K ohms	Prevent PLC input from “floating” when an input is not being provided by AWCA	Fails Open	PLC will detect load imbalance if floating data value was latched into PLC input.	No effect.	3
			Fails Shorted	PLC input will be shorted to ground reference. PLC will detect load imbalance between East and west motors. Torque will not be proved.	No effect.	3
I:0,6,I7	PLC Input	Provides armature current feedback to PLC	Fails Low or No Output	Torque will not be proved. PLC will not allow hoist to operate. If failure occurs while hoist is operating, PLC will detect load imbalance, disable hoist and set brakes. Delta Tau motion controller will also detect loss of armature current feedback, disable hoist and set brakes.	No effect.	3
			Fails High Input	PLC will detect load imbalance, disable hoist and set brakes. Delta Tau motion controller will also detect loss of armature current feedback, disable hoist and set brakes. Delta Tau motion control board will attempt to servo hoist motors to commanded speed. If motors do not reach or maintain commanded speed, Delta Tau motion control board will detect following error, drive will be disabled and brakes will set.	No effect.	3
None	Resistor 20K Ohms	Prevent PLC input from “floating” when an input is not being provided by AWCA	Fails Open	No effect. PLC will be able to check for field loss when operating.	No effect.	3

Table 20. **Electrical FMEA - Auxiliary Hoist Primary Mode**

System/Subsystem: 325 Ton Bridge Cranes at the Vehicle Assembly Building High Bays 1/2/3/4 / Auxiliary Hoist
PMN: H72-1200-01, -02
Drawing No.: EB-2508
Reference Figure: None

Find No. Part No.	Part Name	Part Function	a. Failure Mode b. Cause c. FMN d. Detection Method e. Correcting Action f. Time to Effect g. Timeframe	Failure Effect On System Performance	Failure Effect On Vehicle Systems And/Or Personnel Safety	Crit Cat
			Fails Shorted	PLC input will be shorted to ground reference. PLC will detect loss of field current, shut down drive and set brakes.	No effect.	3
I:0,7,I1	PLC input	Provides Field Current feedback to PLC	Fails Low or No Output	PLC will detect loss of field current, shut down drives and set brakes.	No effect.	3
			Fails High Input	PLC would not detect field loss if it occurred. Motor control module will detect loss of field current and disable. PLC will detect drive not ready and set brakes. Delta Tau motion control board will attempt to servo hoist motors to commanded speed. If motors do not reach or maintain commanded speed, Delta Tau motion control board will detect following error, drive will be disabled and brakes will set.	No effect.	3
AWOL	Overload Switch	Contact opens when excessive current is detected in motor armature loop	Prematurely Operates	PLC input will de-energize. PLC will disable drive and set brake.	No effect.	3
			Fails to Operate	Excessive current can flow through associated motor. Motor will overheat. Motor overheat sensors will detect condition and disable drive. Delta Tau will continue to servo motor to commanded speed. If speed does not match speed commanded, Delta Tau will disable drive and set brakes.	No effect.	3

Table 20. **Electrical FMEA - Auxiliary Hoist Primary Mode**

System/Subsystem: 325 Ton Bridge Cranes at the Vehicle Assembly Building High Bays 1/2/3/4 / Auxiliary Hoist
PMN: H72-1200-01, -02

Drawing No.: EB-2508
Reference Figure: None

Find No. Part No.	Part Name	Part Function	a. Failure Mode b. Cause c. FMN d. Detection Method e. Correcting Action f. Time to Effect g. Timeframe	Failure Effect On System Performance	Failure Effect On Vehicle Systems And/Or Personnel Safety	Crit Cat
	Contact, Normally Closed	De-energizes PLC input when overload switch detects excessive current in motor armature loop	Fails Open	PLC input will remain de-energized. PLC will disable drive and set brakes.	No effect.	3
			Fails Closed	Excessive current can flow through associated motor. Motor will overheat. Motor overheat sensors will detect condition and disable drive. Delta Tau will continue to servo motor to commanded speed. If speed does not match speed commanded, Delta Tau will disable drive and set brakes.	No effect.	3
None	Ammeter	Indicates amount of current flowing in motor armature loop	Fails Open	Cab ammeter will indicate zero current for one hoist motor. Hoist will operate normally.	No effect.	3
			Fails Shorted	Excessive current will flow through ammeter windings resulting in windings burning open. See above.	No effect.	3
None	Auxiliary Hoist Motor, West	Provide torque to mechanical drive system to move load				

Table 20. **Electrical FMEA - Auxiliary Hoist Primary Mode**

System/Subsystem: 325 Ton Bridge Cranes at the Vehicle Assembly Building High Bays 1/2/3/4 / Auxiliary Hoist
PMN: H72-1200-01, -02

Drawing No.: EB-2508
Reference Figure: None

Find No. Part No.	Part Name	Part Function	a. Failure Mode b. Cause c. FMN d. Detection Method e. Correcting Action f. Time to Effect g. Timeframe	Failure Effect On System Performance	Failure Effect On Vehicle Systems And/Or Personnel Safety	Crit Cat
	Armature Windings	Provides torque to rotate motor output shaft	Fails Open	Loss of current path for one hoist motor. PLC will detect load imbalance and shut down drives and set brakes. Delta Tau motion controller will also detect loss of armature current feedback and signal PLC to shut down drives and set brakes. Delta Tau will continue to servo motor to commanded speed. If speed does not match speed commanded, Delta Tau will disable drive and set brakes.	No effect.	3
			Fails Shorted	Excessive current will flow through shorted motor. AWMCM will detect instantaneous overcurrent, disabling drive and setting brakes. Excessive current will trip overload switch, disabling drive, or Delta Tau motion control board will detect following error.	No effect.	3
	Field Windings	Provides static magnetic field for armature magnetic field to work against	Fails Open	PLC will detect field loss and shut down drive and set brakes. Motor control module will detect field loss and drop out READY relays, disabling drives and setting brakes.	No effect.	3

Table 20. **Electrical FMEA - Auxiliary Hoist Primary Mode**

System/Subsystem: 325 Ton Bridge Cranes at the Vehicle Assembly Building High Bays 1/2/3/4 / Auxiliary Hoist
PMN: H72-1200-01, -02
Drawing No.: EB-2508
Reference Figure: None

Find No. Part No.	Part Name	Part Function	a. Failure Mode b. Cause c. FMN d. Detection Method e. Correcting Action f. Time to Effect g. Timeframe	Failure Effect On System Performance	Failure Effect On Vehicle Systems And/Or Personnel Safety	Crit Cat
			Fails Shorted	Excessive current will flow through remaining field winding creating a torque imbalance between the two motors. PLC will detect load imbalance and disable drives and set brakes. Delta Tau will continue to servo motor to commanded speed. If speed does not match speed commanded, Delta Tau will disable drive and set brakes.	No effect.	3
AECB	Circuit Breaker	Protects circuitry from overloads in Auxiliary Hoist East Drive circuit	Prematurely Operates	Loss of power to Auxiliary Hoist East Motor Control Module. Phase monitor relay will drop out READY relays, disabling drive. PLC will detect drive not enabled and set brakes.	No effect.	3
			Fails to Operate	Upstream 500A Auxiliary circuit Breaker will trip. Loss of power to crane. All brakes will set. Requires previous failure to cause overload.	No effect.	3
AEIT	Isolation Transformer	Isolates Auxiliary Hoist East Drive circuit to reduce electrical noise and interference	Fails Open	Loss of one or more power phases. Phase monitor relay will drop out READY relays, disabling drive. PLC will detect drive not enabled and set brakes.	No effect.	3
			Fails Shorted	Overload will trip AECB. Phase monitor relay will drop out READY relays, disabling drive. PLC will detect drive not enabled and set brakes.	No effect.	3

Table 20. **Electrical FMEA - Auxiliary Hoist Primary Mode**

System/Subsystem: 325 Ton Bridge Cranes at the Vehicle Assembly Building High Bays 1/2/3/4 / Auxiliary Hoist
PMN: H72-1200-01, -02
Drawing No.: EB-2508
Reference Figure: None

Find No. Part No.	Part Name	Part Function	a. Failure Mode b. Cause c. FMN d. Detection Method e. Correcting Action f. Time to Effect g. Timeframe	Failure Effect On System Performance	Failure Effect On Vehicle Systems And/Or Personnel Safety	Crit Cat
AEFU1, AEFU2, AEFU3	Fuse	Protects circuitry from overloads in Auxiliary Hoist East Motor Blower circuit	Prematurely Operates	Loss of one or more power phases. Phase monitor relay will drop out READY relays, disabling drive. PLC will detect drive not enabled and set brakes.	No effect.	3
			Fails to Operate	Associated fuse in current loop will protect against overloads. Phase monitor relay will drop out READY relays, disabling drive. PLC will detect drive not enabled and set brakes. Requires previous failure to cause overload.	No effect.	3
AEPM	Auxiliary East Phase Monitor Relay	Monitors 3 phase power for proper phase relationships	Fails De-energized	Contact will not close to energize relays AERDY and AEFRDY. East drive will be disabled. PLC will detect drive not enabled and set brakes.	No effect.	3
			Fails Energized	Phase change or voltage imbalance will be detected by AEFSA. AEFSA will disable west drive. PLC will detect drive not enabled and set brakes. Requires previous failure to cause improper phase or voltage.	No effect.	3
	Contact	Opens to de-energize relays AERDY, AEFRDY if improper phase relationship is detected	Fails Open	Relays AERDY and AEFRDY will not be energized. East drive will be disabled. PLC will detect drive not enabled and set brakes.	No effect.	3

Table 20. **Electrical FMEA - Auxiliary Hoist Primary Mode**

System/Subsystem: 325 Ton Bridge Cranes at the Vehicle Assembly Building High Bays 1/2/3/4 / Auxiliary Hoist
PMN: H72-1200-01, -02
Drawing No.: EB-2508
Reference Figure: None

Find No. Part No.	Part Name	Part Function	a. Failure Mode b. Cause c. FMN d. Detection Method e. Correcting Action f. Time to Effect g. Timeframe	Failure Effect On System Performance	Failure Effect On Vehicle Systems And/Or Personnel Safety	Crit Cat
			Fails Closed	Phase change or voltage imbalance will be detected by AEFSA. AEFSA will disable East drive. PLC will detect drive not enabled and set brakes. Requires previous failure to cause improper phase or voltage.	No effect.	3
AEBOL	Overload Switch	Switch contact opens when excessive current is detected in Auxiliary Hoist East motor blower circuit	Prematurely Operates	AEBOL contact will open, de-energizing relay AEBS, loss of power to Auxiliary Hoist East blower motor. PLC will set error bit. Error will cause Hoist to decelerate to stop and brakes to set.	No effect.	3
			Fails to Operate	AEFU1-3 will protect against overload. Hoist drive will continue to operate. Motor overtemp sensors will detect if hoist motor overheats. Requires previous failure to cause overload.	No effect.	3
	Contact	Opens to de-energize PLC input	Fails Open	Relay AEBS will be de-energized. Loss of power to Auxiliary hoist East blower motor. Motor overtemp sensors will disable hoist drive if hoist motor overheats.	No effect.	3
			Fails closed	Relay AEBS will not de-energize when excessive current is running through hoist East bower motor. AEFU1-3 will protect circuitry from overload. Motor overtemp sensors will detect if hoist motor over heats. Requires previous failure to cause overload.	No effect.	3

Table 20. **Electrical FMEA - Auxiliary Hoist Primary Mode**

System/Subsystem: 325 Ton Bridge Cranes at the Vehicle Assembly Building High Bays 1/2/3/4 / Auxiliary Hoist
PMN: H72-1200-01, -02
Drawing No.: EB-2508
Reference Figure: None

Find No. Part No.	Part Name	Part Function	a. Failure Mode b. Cause c. FMN d. Detection Method e. Correcting Action f. Time to Effect g. Timeframe	Failure Effect On System Performance	Failure Effect On Vehicle Systems And/Or Personnel Safety	Crit Cat
None	Auxiliary Hoist East Blower Motor	Provide cooling airflow for Auxiliary Hoist west motor	Fails Open	Loss of cooling air through Hoist motor. Motor overtemp sensors will disable hoist drive if hoist motor overheats.	No effect.	3
			Fails Shorted	Current overload will either trip blower overload switch or blow AEFU1-3. Blower overload trip will remove power from blower. Phase voltage monitor will detect voltage loss and de-energize PLC input. PLC will set error bit. PLC will decelerate hoist to a stop and set brakes.	No effect.	3
None	Resistor	Provides voltage input for Fault Sense Assembly	Fails Open	Voltage imbalance will be detected by AEFSA. AEFSA will disable drive and set brakes. Delta Tau motion control board servoing will ensure motor operates at commanded speed.	No effect.	3
			Fails Short	Voltage imbalance will be detected by AEFSA. AEFSA will disable drive and set brakes. Delta Tau motion control board servoing will ensure motor operates at commanded speed.	No effect.	3
None	Tachometer	Generates voltage proportional to rotational speed of East Auxiliary Hoist Motor	Fails Low or No Output	Loss of AEMCM overspeed protection. PLC will provide overspeed protection. Requires previous failures to cause overspeed condition.	No effect.	3
			Fails High Output	AEMCM will trip off for overspeed condition that does not exist.	No effect.	3

Table 20. **Electrical FMEA - Auxiliary Hoist Primary Mode**

System/Subsystem: 325 Ton Bridge Cranes at the Vehicle Assembly Building High Bays 1/2/3/4 / Auxiliary Hoist
PMN: H72-1200-01, -02
Drawing No.: EB-2508
Reference Figure: None

Find No. Part No.	Part Name	Part Function	a. Failure Mode b. Cause c. FMN d. Detection Method e. Correcting Action f. Time to Effect g. Timeframe	Failure Effect On System Performance	Failure Effect On Vehicle Systems And/Or Personnel Safety	Crit Cat
AEMCM	Auxiliary Hoist East Motor Control Module	Provides primary armature and field control of East Auxiliary Hoist motor				
	Armature Current Outputs A1, A2	Provides current for Hoist Motor armature windings	Fails Low or No Output	Delta Tau motion controller will increase current reference to operate hoist at commanded speed. Delta Tau motion controller will detect following error if motor speed does not match speed commanded. PLC will detect current imbalance, shut down hoist drives and set brakes.	No effect.	3
			Fails High Output	Delta Tau motion controller will increase current reference to operate hoist at commanded speed. Delta Tau motion controller will detect following error if motor speed does not match speed commanded. PLC will detect current imbalance and set brakes.	No effect.	3

Table 20. **Electrical FMEA - Auxiliary Hoist Primary Mode**

System/Subsystem: 325 Ton Bridge Cranes at the Vehicle Assembly Building High Bays 1/2/3/4 / Auxiliary Hoist
PMN: H72-1200-01, -02
Drawing No.: EB-2508
Reference Figure: None

Find No. Part No.	Part Name	Part Function	a. Failure Mode b. Cause c. FMN d. Detection Method e. Correcting Action f. Time to Effect g. Timeframe	Failure Effect On System Performance	Failure Effect On Vehicle Systems And/Or Personnel Safety	Crit Cat
	Field Current Outputs, F1, F2	Provides current for Hoist Motor Field Windings	Fails Low or No Output	PLC will detect loss of field current, shut down hoist and set brakes. Motor control module will also detect loss of field current and shut down. PLC will detect motor control module not ready and set brakes. Delta Tau motion control board will attempt to servo hoist motors to commanded speed. If motors do not reach or maintain commanded speed, Delta Tau motion control board will detect following error, drive will be disabled and brakes will set.	No effect.	3
			Fails High Output	Delta Tau motion control board will attempt to servo hoist motors to commanded speed. If motors do not reach or maintain commanded speed, Delta Tau motion control board will detect following error, drive will be disabled and brakes will set. High field current will cause motor to overheat. PLC will detect overheat condition and disable hoist and set brakes.	No effect.	3
AECA	Auxiliary Hoist East Cable Adapter	Provides interface between PLC and AEMCM, and field current feedback to AEMCM				

Table 20. **Electrical FMEA - Auxiliary Hoist Primary Mode**

System/Subsystem: 325 Ton Bridge Cranes at the Vehicle Assembly Building High Bays 1/2/3/4 / Auxiliary Hoist
PMN: H72-1200-01, -02
Drawing No.: EB-2508
Reference Figure: None

Find No. Part No.	Part Name	Part Function	a. Failure Mode b. Cause c. FMN d. Detection Method e. Correcting Action f. Time to Effect g. Timeframe	Failure Effect On System Performance	Failure Effect On Vehicle Systems And/Or Personnel Safety	Crit Cat
	15, Armature Current Feedback	Provides current feedback to PLC input	Fails no output	Torque will not be proved. PLC will not allow hoist to operate. If failure occurs while hoist is operating, PLC will detect load imbalance, disable hoist and set brakes. Delta Tau motion controller will also detect loss of armature current feedback, disable hoist and set brakes.	No effect.	3
	19, Field Current Feedback	Provides field current feedback to PLC input	Fails No Output	PLC will detect loss of field current, shut down hoist and set brakes. Delta Tau motion control board will attempt to servo hoist motors to commanded speed. Delta Tau motion control board will detect following error, drive will disabled and brakes will set.	No effect.	3
	5, Field Current Reference Signal	Provides interface for field current command from PLC to AEMCM	Fails No Output	PLC will detect loss of field current, shut down hoist and set brakes. Motor control module will also detect loss of field current and shut down. PLC will detect motor control module not ready and set brakes. Delta Tau motion control board will attempt to servo hoist motors to commanded speed. If motors do not reach or maintain commanded speed, Delta Tau will detect following error, drive will be disabled and brakes will set.	No effect.	3
AEFB	Auxiliary Hoist East Field Board	Measures current in East motor field loop and sends feedback signal to AEMCM firing board				

Table 20. **Electrical FMEA - Auxiliary Hoist Primary Mode**

System/Subsystem: 325 Ton Bridge Cranes at the Vehicle Assembly Building High Bays 1/2/3/4 / Auxiliary Hoist
PMN: H72-1200-01, -02

Drawing No.: EB-2508
Reference Figure: None

Find No. Part No.	Part Name	Part Function	a. Failure Mode b. Cause c. FMN d. Detection Method e. Correcting Action f. Time to Effect g. Timeframe	Failure Effect On System Performance	Failure Effect On Vehicle Systems And/Or Personnel Safety	Crit Cat
	4, Field Current Feedback	Provides current feedback to AEMCM	Fails Low or No Output	Motor control module will increase field current to compensate for low feedback. Imbalance between west and East motors will cause an armature imbalance. PLC will detect imbalance, shut down drives and set brakes. Delta Tau motion control board will attempt to servo hoist motors to commanded speed. If motors do not reach or maintain commanded speed, Delta Tau will detect following error, drive will be disabled and brakes will set.	No effect.	3
			Fails High Output	Motor control module will reduce field current to compensate. PLC will detect loss of field current, shut down hoist and set brakes. Delta Tau motion control board will attempt to servo hoist motors to commanded speed. If motors do not reach or maintain commanded speed, Delta Tau will detect following error, drive will be disabled and brakes will set.	No effect.	3
O:0,5,O4	PLC Output	Provides field current reference signal to AECA	Fails Low or No Output	PLC will detect loss of field current, shut down hoist and set brakes. Delta Tau motion control board will attempt to servo hoist motors to commanded speed. If motors do not reach or maintain commanded speed, Delta Tau will detect following error, drive will be disabled and brakes will set.	No effect.	3

Table 20. **Electrical FMEA - Auxiliary Hoist Primary Mode**

System/Subsystem: 325 Ton Bridge Cranes at the Vehicle Assembly Building High Bays 1/2/3/4 / Auxiliary Hoist
PMN: H72-1200-01, -02
Drawing No.: EB-2508
Reference Figure: None

Find No. Part No.	Part Name	Part Function	a. Failure Mode b. Cause c. FMN d. Detection Method e. Correcting Action f. Time to Effect g. Timeframe	Failure Effect On System Performance	Failure Effect On Vehicle Systems And/Or Personnel Safety	Crit Cat
			Fails High Output	Delta Tau motion control board will attempt to servo hoist motors to commanded speed. If motors do not reach or maintain commanded speed, Delta Tau will detect following error, drive will be disabled and brakes will set. High field current will cause motor to overheat. PLC will detect overheat condition and disable hoist and set brakes.	No effect.	3
None	Resistor 20K Ohm	Prevent PLC input from “floating” when an input is not being provided by AECA	Fails Open	PLC will detect load imbalance if floating data value was latched into PLC input.	No effect.	3
			Fails Shorted	PLC input will be shorted to ground reference. PLC will detect load imbalance between East and west motors. Torque will not be proved.	No effect.	3
I:0,6,I8	PLC Input	Provides armature current feedback to PLC	Fails Low or No Output	Torque will not be proved. PLC will not allow hoist to operate. If failure occurs while hoist is operating, PLC will detect load imbalance, disable hoist and set brakes. Delta Tau motion controller will also detect loss of armature current feedback, disable hoist and set brakes.	No effect.	3

Table 20. **Electrical FMEA - Auxiliary Hoist Primary Mode**

System/Subsystem: 325 Ton Bridge Cranes at the Vehicle Assembly Building High Bays 1/2/3/4 / Auxiliary Hoist
PMN: H72-1200-01, -02
Drawing No.: EB-2508
Reference Figure: None

Find No. Part No.	Part Name	Part Function	a. Failure Mode b. Cause c. FMN d. Detection Method e. Correcting Action f. Time to Effect g. Timeframe	Failure Effect On System Performance	Failure Effect On Vehicle Systems And/Or Personnel Safety	Crit Cat
			Fails High Input	PLC will detect load imbalance, disable hoist and set brakes. Delta Tau motion controller will also detect loss of armature current feedback, disable hoist and set brakes. Delta Tau motion control board will attempt to servo hoist motors to commanded speed. if motors do not reach or maintain commanded speed, Delta Tau motion control board will detect following error, drive will be disabled and brakes will set.	No effect.	3
None	Resistor 20K Ohm	Prevent PLC input from “floating” when an input is not being provided by AECA	Fails Open	No effect. PLC will be able to check for field loss when operating.	No effect.	3
			Fails Shorted	PLC input will be shorted to ground reference. PLC will detect loss of field current, shut down drive and set brakes.	No effect.	3
I:0,7,I2	PLC Input	Provides field current feedback to PLC	Fails Low or No Output	PLC will detect loss of field current, shut down drives and set brakes.	No effect.	3

Table 20. **Electrical FMEA - Auxiliary Hoist Primary Mode**

System/Subsystem: 325 Ton Bridge Cranes at the Vehicle Assembly Building High Bays 1/2/3/4 / Auxiliary Hoist
PMN: H72-1200-01, -02
Drawing No.: EB-2508
Reference Figure: None

Find No. Part No.	Part Name	Part Function	a. Failure Mode b. Cause c. FMN d. Detection Method e. Correcting Action f. Time to Effect g. Timeframe	Failure Effect On System Performance	Failure Effect On Vehicle Systems And/Or Personnel Safety	Crit Cat
			Fails High Output	PLC would not detect field loss if it occurred. Motor control module will detect loss of field current and disable. PLC will detect drive not ready and set brakes. Delta Tau motion control board will attempt to servo hoist motors to commanded speed. If motors do not reach or maintain commanded speed, Delta Tau motion control board will detect following error, drive will be disabled and brakes will set.	No effect.	3
AEOL	Overload Switch	Contact opens when excessive current is detected in motor armature loop	Prematurely Operates	PLC input will de-energize. PLC will disable drive and set brake.	No effect.	3
			Fails to Operate	Excessive current can flow through associated motor. Motor will overheat. Motor overheat sensors will detect condition and disable drive. Delta Tau will continue to servo motor to commanded speed. If speed does not match speed commanded, Delta Tau will disable drive and set brakes.	No effect.	3
	Contact, Normally Closed	De-energizes PLC input when overload switch detects excessive current in motor armature loop	Fails Open	PLC input will remain de-energized. PLC will disable drive and set brakes.	No effect.	3

Table 20. **Electrical FMEA - Auxiliary Hoist Primary Mode**

System/Subsystem: 325 Ton Bridge Cranes at the Vehicle Assembly Building High Bays 1/2/3/4 / Auxiliary Hoist
PMN: H72-1200-01, -02
Drawing No.: EB-2508
Reference Figure: None

Find No. Part No.	Part Name	Part Function	a. Failure Mode b. Cause c. FMN d. Detection Method e. Correcting Action f. Time to Effect g. Timeframe	Failure Effect On System Performance	Failure Effect On Vehicle Systems And/Or Personnel Safety	Crit Cat
			Fails Closed	Excessive current can flow through associated motor. Motor will overheat. Motor overheat sensors will detect condition and disable drive. Delta Tau will continue to servo motor to commanded speed. If speed does not match speed commanded, Delta Tau will disable drive and set brakes.	No effect.	3
None	Ammeter	Indicates amount of current flowing in motor armature loop	Fails Open	Cab ammeter will indicate zero current for one hoist motor. Hoist will operate normally.	No effect.	3
			Fails Shorted	Excessive current will flow through ammeter windings resulting in windings burning open. See above.	No effect.	3
None	Auxiliary Hoist Motor, East	Provide torque to mechanical drive system to move load				
	Armature Windings	Provides torque to rotate motor output shaft	Fails Open	Loss of current path for one hoist motor. PLC will detect load imbalance and shut down drives and set brakes. Delta Tau motion controller will also detect loss of armature current feedback and signal PLC to shut down drives and set brakes. Delta Tau will continue to servo motor to commanded speed. If speed does not match speed commanded, Delta Tau will disable drive and set brakes.	No effect.	3

Table 20. **Electrical FMEA - Auxiliary Hoist Primary Mode**

System/Subsystem: 325 Ton Bridge Cranes at the Vehicle Assembly Building High Bays 1/2/3/4 / Auxiliary Hoist
PMN: H72-1200-01, -02
Drawing No.: EB-2508
Reference Figure: None

Find No. Part No.	Part Name	Part Function	a. Failure Mode b. Cause c. FMN d. Detection Method e. Correcting Action f. Time to Effect g. Timeframe	Failure Effect On System Performance	Failure Effect On Vehicle Systems And/Or Personnel Safety	Crit Cat
			Fails Shorted	Excessive current will flow through shorted motor. AEMCM will detect instantaneous overcurrent, disabling drive and setting brakes. Excessive current will trip overload switch, disabling drive, or Delta Tau motion control board will detect following error.	No effect.	3
	Field windings	Provides static magnetic field for armature magnetic field to work against	Fails Open	PLC will detect field loss and shut down drive and set brakes. Motor control module will detect field loss and drop out READY relays, disabling drives and setting brakes.	No effect.	3
			Fails Shorted	Excessive current will flow through remaining field winding creating a torque imbalance between the two motors. PLC will detect load imbalance and disable drives and set brakes. Delta Tau will continue to servo motor to commanded speed. If speed does not match speed commanded, Delta Tau will disable drive and set brakes.	No effect.	3
None	Speed Select Switch	Contacts close to energize PLC inputs to select speed range	Fails Open (single contact)	Hoist will operate in slow speed range. PLC requires all PLC inputs to be configured properly to select a speed other than slow.	No effect.	3
			Fails Closed (single contact)	Hoist will operate in slow speed. PLC requires all PLC inputs to be configured properly to select a speed other than slow.	No effect.	3

Table 20. **Electrical FMEA - Auxiliary Hoist Primary Mode**

System/Subsystem: 325 Ton Bridge Cranes at the Vehicle Assembly Building High Bays 1/2/3/4 / Auxiliary Hoist
PMN: H72-1200-01, -02

Drawing No.: EB-2508
Reference Figure: None

Find No. Part No.	Part Name	Part Function	a. Failure Mode b. Cause c. FMN d. Detection Method e. Correcting Action f. Time to Effect g. Timeframe	Failure Effect On System Performance	Failure Effect On Vehicle Systems And/Or Personnel Safety	Crit Cat
GI:07,IN1	PLC input	Energizes when field weaken speed range is selected	Fails De-energized	Hoist will operate in slow speed range. PLC requires all PLC inputs to be configured properly to select a speed other than slow.	No effect.	3
			Fails Energized	Hoist will operate in slow speed range. PLC requires all PLC inputs to be configured properly to select a speed other than slow.	No effect.	3
GI:08,IN1	PLC input	Energizes when field weaken speed range is selected	Fails De-energized	Hoist will operate in slow speed range. PLC requires all PLC inputs to be configured properly to select a speed other than slow.	No effect.	3
			Fails Energized	Hoist will operate in slow speed range. PLC requires all PLC inputs to be configured properly to select a speed other than slow.	No effect.	3
GI:07,IN2	PLC input	Energizes when fast speed range is selected	Fails De-energized	Hoist will operate in slow speed range. PLC requires all PLC inputs to be configured properly to select a speed other than slow.	No effect.	3
			Fails Energized	Hoist will operate in fast speed range. PLC requires all PLC inputs to be configured properly to select a speed other than slow.	No effect.	3
GI:08,IN2	PLC input	Energizes when fast speed range is selected	Fails De-energized	Hoist will operate in slow speed range. PLC requires all PLC inputs to be configured properly to select a speed other than slow.	No effect.	3

Table 20. **Electrical FMEA - Auxiliary Hoist Primary Mode**

System/Subsystem: 325 Ton Bridge Cranes at the Vehicle Assembly Building High Bays 1/2/3/4 / Auxiliary Hoist
PMN: H72-1200-01, -02

Drawing No.: EB-2508
Reference Figure: None

Find No. Part No.	Part Name	Part Function	a. Failure Mode b. Cause c. FMN d. Detection Method e. Correcting Action f. Time to Effect g. Timeframe	Failure Effect On System Performance	Failure Effect On Vehicle Systems And/Or Personnel Safety	Crit Cat
			Fails Energized	Hoist will operate in fast speed range. PLC requires all PLC inputs to be configured properly to select a speed other than slow.	No effect.	3
GI:07,IN3	PLC input	Energizes when slow speed range is selected	Fails De-energized	Hoist will operate in slow speed range. PLC requires all PLC inputs to be configured properly to select a speed other than slow.	No effect.	3
			Fails Energized	Hoist will operate in slow speed range. PLC requires all PLC inputs to be configured properly to select a speed other than slow.	No effect.	3
GI:08,IN3	PLC input	Energizes when slow speed range is selected	Fails De-energized	Hoist will operate in slow speed range. PLC requires all PLC inputs to be configured properly to select a speed other than slow.	No effect.	3
			Fails Energized	Hoist will operate in slow speed range. PLC requires all PLC inputs to be configured properly to select a speed other than slow.	No effect.	3
None	Footswitch	Contacts close to command float mode operation	Fails Open	Hoist will not operate in float mode. Requires both contacts to close to enable float mode.	No effect.	3
			Fails Closed	No effect. Float mode will not operate until commanded by footswitch and thumbswitch.	No effect.	3
GI:07,IN4	PLC Input	Energizes when footswitch is pressed, selecting float mode	Fails de-energized	Hoist will not operate in float mode, requires both inputs to enable float mode.	No effect.	3

Table 20. **Electrical FMEA - Auxiliary Hoist Primary Mode**

System/Subsystem: 325 Ton Bridge Cranes at the Vehicle Assembly Building High Bays 1/2/3/4 / Auxiliary Hoist
PMN: H72-1200-01, -02

Drawing No.: EB-2508
Reference Figure: None

Find No. Part No.	Part Name	Part Function	a. Failure Mode b. Cause c. FMN d. Detection Method e. Correcting Action f. Time to Effect g. Timeframe	Failure Effect On System Performance	Failure Effect On Vehicle Systems And/Or Personnel Safety	Crit Cat
			Fails energized	No effect. Float mode will not operate until commanded by footswitch and thumbswitch.	No effect.	3
GI:08, IN5	PLC Input	Energizes when footswitch is pressed, selecting float mode	Fails de-energized	Hoist will not operate in float mode, requires both inputs to enable float mode.	No effect.	3
			Fails energized	No effect. Float mode will not operate until commanded by footswitch and thumbswitch.	No effect.	3
None	Master switch	Provides interface from operator to command direction and speed of Auxiliary Hoist	* See component Brake down below			
	* Thumbswitch	Contacts close to energize PLC inputs, commanding float mode brake release when footswitch is pressed.	Fails Open	Hoist float mode will not operate. Requires both footswitch and thumbswitch inputs to enable float mode.	No effect.	3
			Fails Closed	No effect. Requires both footswitch and thumbswitch inputs to enable float mode.	No effect.	3
	* Lower	Contacts close to energize PLC inputs, commanding hoist to lower load	Fails Open (single contact)	Hoist will not operate in direction commanded. PLC requires both direction inputs to enable drive.	No effect.	3

Table 20. **Electrical FMEA - Auxiliary Hoist Primary Mode**

System/Subsystem: 325 Ton Bridge Cranes at the Vehicle Assembly Building High Bays 1/2/3/4 / Auxiliary Hoist
PMN: H72-1200-01, -02
Drawing No.: EB-2508
Reference Figure: None

Find No. Part No.	Part Name	Part Function	a. Failure Mode b. Cause c. FMN d. Detection Method e. Correcting Action f. Time to Effect g. Timeframe	Failure Effect On System Performance	Failure Effect On Vehicle Systems And/Or Personnel Safety	Crit Cat
			Fails Closed (single contact)	Loss of masterswitch 0.5 volt check when masterswitch is in the neutral position. Requires multiple failures for masterswitch to output higher than expected voltage. PLC requires both direction inputs to select direction.	No effect.	3
	* Hoist	Contacts close to energize PLC inputs, commanding hoist to raise load	Fails Open (single contact)	Hoist will not operate in direction commanded. PLC requires both direction inputs to enable drive.	No effect.	3
			Fails Closed (single contact)	Loss of masterswitch 0.5 volt check when masterswitch is in the neutral position. Requires multiple failures for masterswitch to output higher than expected voltage. PLC requires both direction inputs to select direction.	No effect.	3
	* 5K Potentiometer	Provides 0 to 10 volt DC signal to PLC input commanding speed	Fails Open	Loss of speed command voltage to PLC inputs. PLC will scale speed command to minimum speed in range selected. Hoist will move in direction commanded at minimum speed when motion is commanded with the masterswitch.	No effect.	3
			Fails Short	Short will cause an overload of power supply 10PS. Overload will cause FU15 to blow and result in a loss of power to power supply 10PS. Loss voltage will be detected by 10VSAR. 10VSAR will drop out control power, disabling crane and setting all brakes.	No effect.	3

Table 20. **Electrical FMEA - Auxiliary Hoist Primary Mode**

System/Subsystem: 325 Ton Bridge Cranes at the Vehicle Assembly Building High Bays 1/2/3/4 / Auxiliary Hoist
PMN: H72-1200-01, -02

Drawing No.: EB-2508
Reference Figure: None

Find No. Part No.	Part Name	Part Function	a. Failure Mode b. Cause c. FMN d. Detection Method e. Correcting Action f. Time to Effect g. Timeframe	Failure Effect On System Performance	Failure Effect On Vehicle Systems And/Or Personnel Safety	Crit Cat
GI:07,IN5	PLC Input	Energizes when thumbswitch contact closes, commanding brake release during float mode	Fails De-energized	Hoist float mode will not operate. Requires both footswitch and thumbswitch inputs to enable float mode.	No effect.	3
			Fails Energized	No effect. Requires both footswitch and thumbswitch inputs to enable float mode.	No effect.	3
GI:08,IN5	PLC input	Energizes when thumbswitch contact closes, commanding brake release during float mode	Fails De-energized	Hoist float mode will not operate. Requires both footswitch and thumbswitch inputs to enable float mode.	No effect.	3
			Fails Energized	No effect. Requires both footswitch and thumbswitch inputs to enable float mode.	No effect.	3
GI:07,IN6	PLC Input	Energizes when hoist contact closes, commanding hoist to raise load	Fails De-energized	Hoist will not operate in direction commanded. PLC requires both direction inputs to select direction.	No effect.	3
			Fails Energized	Loss of masterswitch 0.5 volt check when masterswitch is in the neutral position. Requires multiple failures for masterswitch to output higher than expected voltage. PLC requires both direction inputs to select direction.	No effect.	3
GI:08,IN6	PLC Input	Energizes when hoist contact closes, commanding hoist to raise load	Fails De-energized	Hoist will not operate in direction commanded. PLC requires both direction inputs to select direction.	No effect.	3

Table 20. **Electrical FMEA - Auxiliary Hoist Primary Mode**

System/Subsystem: 325 Ton Bridge Cranes at the Vehicle Assembly Building High Bays 1/2/3/4 / Auxiliary Hoist
PMN: H72-1200-01, -02
Drawing No.: EB-2508
Reference Figure: None

Find No. Part No.	Part Name	Part Function	a. Failure Mode b. Cause c. FMN d. Detection Method e. Correcting Action f. Time to Effect g. Timeframe	Failure Effect On System Performance	Failure Effect On Vehicle Systems And/Or Personnel Safety	Crit Cat
			Fails Energized	No effect. PLC requires other direction input to command motion and direction.	No effect.	3
GI:07,IN7	PLC Input	Energizes when lower contact closes, commanding hoist to lower load	Fails De-energized	Hoist will not operate in direction commanded. PLC requires both direction inputs to select direction.	No effect.	3
			Fails Energized	Loss of masterswitch 0.5 volt check when masterswitch is in the neutral position. Requires multiple failures for masterswitch to output higher than expected voltage. PLC requires both direction inputs to select direction.	No effect.	3
GI:08,IN7	PLC Input	Energizes when lower contact closes, commanding hoist to lower load	Fails De-energized	Hoist will not operate in direction commanded. PLC requires both direction inputs to select direction.	No effect.	3
			Fails Energized	No effect. PLC requires other direction input to command motion and direction.	No effect.	3
GI:03,IN3	PLC input	Analog input for speed commanded	Fails Low or No Output	PLC will detect difference between inputs. PLC will disable hoist drive and set brakes.	No effect.	3
			Fails High Input	PLC will detect difference between inputs. PLC will disable hoist drive and set brakes.	No effect.	3
GI:01,IN3	PLC input	Analog input for speed commanded	Fails Low or No Output	PLC will detect difference between inputs. PLC will disable hoist drive and set brakes.	No effect.	3

Table 20. **Electrical FMEA - Auxiliary Hoist Primary Mode**

System/Subsystem: 325 Ton Bridge Cranes at the Vehicle Assembly Building High Bays 1/2/3/4 / Auxiliary Hoist
PMN: H72-1200-01, -02
Drawing No.: EB-2508
Reference Figure: None

Find No. Part No.	Part Name	Part Function	a. Failure Mode b. Cause c. FMN d. Detection Method e. Correcting Action f. Time to Effect g. Timeframe	Failure Effect On System Performance	Failure Effect On Vehicle Systems And/Or Personnel Safety	Crit Cat
			Fails High Input	PLC will detect difference between inputs. PLC will disable hoist drive and set brakes.	No effect.	3
None	Float Mode Potentiometer	Provides interface from operator to command direction and speed of Auxiliary Hoist float mode				
	Lower	Contacts close to energize PLC inputs, commanding hoist to lower	Fails Open (single contact)	Hoist will not operate in direction commanded. PLC requires both direction inputs to select direction.	No effect.	3
			Fails Closed (single contact)	Loss of masterswitch 0.5 volt check when masterswitch is in the neutral position. Requires multiple failures for masterswitch to output higher than expected voltage. PLC requires both direction inputs to select direction.	No effect.	3
	Hoist	Closes contacts to energize PLC inputs, commanding hoist to raise load	Fails Open (single contact)	Hoist will not operate in direction commanded. PLC requires both direction inputs to select direction.	No effect.	3
			Fails Closed (single contact)	Loss of masterswitch 0.5 volt check when masterswitch is in the neutral position. Requires multiple failures for masterswitch to output higher than expected voltage. PLC requires both direction inputs to select direction.	No effect.	3

Table 20. **Electrical FMEA - Auxiliary Hoist Primary Mode**

System/Subsystem: 325 Ton Bridge Cranes at the Vehicle Assembly Building High Bays 1/2/3/4 / Auxiliary Hoist
PMN: H72-1200-01, -02
Drawing No.: EB-2508
Reference Figure: None

Find No. Part No.	Part Name	Part Function	a. Failure Mode b. Cause c. FMN d. Detection Method e. Correcting Action f. Time to Effect g. Timeframe	Failure Effect On System Performance	Failure Effect On Vehicle Systems And/Or Personnel Safety	Crit Cat
	5K Potentiometer	Provides 0 to 10 volt DC signal to PLC input commanding speed	Fails Open	Loss of speed command voltage to PLC inputs. PLC will scale speed command to minimum speed in float range. Hoist will move in direction commanded at minimum speed when motion is commanded with the float masterswitch.	No effect.	3
			Fails Short	Short will cause an overload of power supply 10PS. Overload will cause FU15 to blow and result in a loss of power to power supply 10PS. Loss of voltage will be detected by 10SVAR. 10SVAR will drop out control power, disabling crane and setting all brakes.	No effect.	3
GI:07,IN8	PLC Input	Energizes when hoist contact closes, commanding hoist to raise load	Fails De-energized	Hoist will not operate in direction commanded. PLC requires both direction inputs to select direction.	No effect.	3
			Fails Energized	Loss of masterswitch 0.5 volt check when masterswitch is in the neutral position. Requires multiple failures for masterswitch to output higher than expected voltage. PLC requires both direction inputs to select direction.	No effect.	3
GI:08,IN8	PLC Input	Energizes when hoist contact closes, commanding hoist to raise load	Fails De-energized	Hoist will not operate in direction commanded. PLC requires both direction inputs to select direction.	No effect.	3

Table 20. **Electrical FMEA - Auxiliary Hoist Primary Mode**

System/Subsystem: 325 Ton Bridge Cranes at the Vehicle Assembly Building High Bays 1/2/3/4 / Auxiliary Hoist
PMN: H72-1200-01, -02
Drawing No.: EB-2508
Reference Figure: None

Find No. Part No.	Part Name	Part Function	a. Failure Mode b. Cause c. FMN d. Detection Method e. Correcting Action f. Time to Effect g. Timeframe	Failure Effect On System Performance	Failure Effect On Vehicle Systems And/Or Personnel Safety	Crit Cat
			Fails Energized	Loss of masterswitch 0.5 volt check when masterswitch is in the neutral position. Requires multiple failures for masterswitch to output higher than expected voltage. PLC requires both direction inputs to select direction.	No effect.	3
GI:07,IN9	PLC Input	Energizes when lower contact closes, commanding hoist to lower load	Fails De-energized	Hoist will not operate in direction commanded. PLC requires both direction inputs to select direction.	No effect.	3
			Fails Energized	Loss of masterswitch 0.5 volt check when masterswitch is in the neutral position. Requires multiple failures for masterswitch to output higher than expected voltage. PLC requires both direction inputs to select direction.	No effect.	3
GI:08,IN9	PLC Input	Energizes when lower contact closes, commanding hoist to lower load	Fails De-energized	Hoist will not operate in direction commanded. PLC requires both direction inputs to select direction.	No effect.	3
			Fails Energized	Loss of masterswitch 0.5 volt check when masterswitch is in the neutral position. Requires multiple failures for masterswitch to output higher than expected voltage. PLC requires both direction inputs to select direction.	No effect.	3
GI:01,IN4	PLC Input	Analog input for float speed commanded	Fails Low or No Output	PLC will detect difference between two inputs. PLC will disable hoist drive and set brakes.	No effect.	3

Table 20. **Electrical FMEA - Auxiliary Hoist Primary Mode**

System/Subsystem: 325 Ton Bridge Cranes at the Vehicle Assembly Building High Bays 1/2/3/4 / Auxiliary Hoist
PMN: H72-1200-01, -02
Drawing No.: EB-2508
Reference Figure: None

Find No. Part No.	Part Name	Part Function	a. Failure Mode b. Cause c. FMN d. Detection Method e. Correcting Action f. Time to Effect g. Timeframe	Failure Effect On System Performance	Failure Effect On Vehicle Systems And/Or Personnel Safety	Crit Cat
			Fails High Input	PLC will detect difference between two inputs. PLC will disable hoist drive and set brakes.	No effect.	3
GI:03,IN4	PLC Input	Analog input for float speed commanded	Fails Low or No Output	PLC will detect difference between two inputs. PLC will disable hoist drive and set brakes.	No effect.	3
			Fails High Input	PLC will detect difference between two inputs. PLC will disable hoist drive and set brakes.	No effect.	3
I:2,4,B8	PLC input	De-energizes when overload switch detects excessive current in Auxiliary Hoist west armature current loop	Fails De-energized	PLC will detect excessive current through motor. PLC will disable drive and set brakes.	No effect.	3
			Fails Energized	Excessive current can flow through associated motor. Motor will overheat. Motor overheat sensors will detect condition and disable drive. Delta Tau will continue to servo motor to commanded speed. If speed does not match speed commanded, Delta Tau will disable drive and set brakes.	No effect.	3
I:2,4,C1	PLC Input	De-energizes when overload switch detects excessive current in Auxiliary hoist East armature current loop	Fails De-energized	PLC will detect excessive current through motor. PLC will disable drive and set brakes.	No effect.	3

Table 20. **Electrical FMEA - Auxiliary Hoist Primary Mode**

System/Subsystem: 325 Ton Bridge Cranes at the Vehicle Assembly Building High Bays 1/2/3/4 / Auxiliary Hoist
PMN: H72-1200-01, -02
Drawing No.: EB-2508
Reference Figure: None

Find No. Part No.	Part Name	Part Function	a. Failure Mode b. Cause c. FMN d. Detection Method e. Correcting Action f. Time to Effect g. Timeframe	Failure Effect On System Performance	Failure Effect On Vehicle Systems And/Or Personnel Safety	Crit Cat
			Fails Energized	Excessive current can flow through associated motor. Motor will overheat. Motor overheat sensors will detect condition and disable drive. Delta Tau will continue to servo motor to commanded speed. If speed does not match speed commanded, Delta Tau will disable drive and set brakes.	No effect.	3
AP	Auxiliary Power Up Timer Relay	Energizes when Auxiliary hoist control circuitry is powered	Fails De-energized	Circuit will not be completed for AOST contacts to energize shunt trip of Auxiliary circuit Breaker if Auxiliary hoist centrifugal overspeed switch trips. Requires previous failures to cause centrifugal overspeed switch to trip.	No effect.	3
			Fails Energized	Shunt trip of Auxiliary circuit Breaker will be energized when power is applied to crane, removing all power from crane.	No effect.	3
	Contact	Closes after time delay to enable overspeed trip of shunt trip for Auxiliary circuit Breaker	Fails Open	Circuit will not be completed for AOST contacts to energize shunt trip of Auxiliary circuit Breaker if Auxiliary hoist centrifugal overspeed switch trips. Requires previous failures to cause centrifugal overspeed switch to trip.	No effect.	3
			Fails Closed	Shunt trip of Auxiliary circuit Breaker will be energized when power is applied to crane, removing all power from crane.	No effect.	3

Table 20. **Electrical FMEA - Auxiliary Hoist Primary Mode**

System/Subsystem: 325 Ton Bridge Cranes at the Vehicle Assembly Building High Bays 1/2/3/4 / Auxiliary Hoist
PMN: H72-1200-01, -02
Drawing No.: EB-2508
Reference Figure: None

Find No. Part No.	Part Name	Part Function	a. Failure Mode b. Cause c. FMN d. Detection Method e. Correcting Action f. Time to Effect g. Timeframe	Failure Effect On System Performance	Failure Effect On Vehicle Systems And/Or Personnel Safety	Crit Cat
AOS	Mechanical Over Speed Switch (Centrifugal)	Switch opens when Auxiliary hoist rotation speed exceeds preset value	Fails Open	Shunt trip of Auxiliary circuit Breaker will be energized when power is applied to crane, removing all power from crane.	No effect.	3
			Fails Closed	Loss of protection from centrifugal overspeed switch. PLC will detect overspeed condition and shut down drives and set brakes. Requires previous failures to cause overspeed.	No effect.	3
AOST	Auxiliary Hoist Overspeed Time Delay Relay	De-energizes when overspeed is detected by mechanical overspeed switch	Fails De-energized	Shunt trip of Auxiliary circuit Breaker will be energized when power is applied to crane, removing all power from crane.	No effect.	3
			Fails Energized	Loss of protection from centrifugal overspeed switch. PLC will detect overspeed condition and shut down drives and set brakes. Requires previous failures to cause overspeed.	No effect.	3
	Contact	Closes to energize shunt trip on Auxiliary circuit Breaker when overspeed is detected in Auxiliary hoist	Fails Open	Loss of protection from centrifugal overspeed switch. PLC will detect overspeed condition and shut down drives and set brakes. Requires previous failures to cause overspeed.	No effect.	3
			Fails Closed	Shunt trip of Auxiliary circuit Breaker will be energized when power is applied to crane, removing all power from crane.	No effect.	3

Table 20. **Electrical FMEA - Auxiliary Hoist Primary Mode**

System/Subsystem: 325 Ton Bridge Cranes at the Vehicle Assembly Building High Bays 1/2/3/4 / Auxiliary Hoist
PMN: H72-1200-01, -02
Drawing No.: EB-2508
Reference Figure: None

Find No. Part No.	Part Name	Part Function	a. Failure Mode b. Cause c. FMN d. Detection Method e. Correcting Action f. Time to Effect g. Timeframe	Failure Effect On System Performance	Failure Effect On Vehicle Systems And/Or Personnel Safety	Crit Cat
None	Auxiliary Hoist Geared Lower Limit Switch	Switch opens when load block reaches preset lower limit of travel	Fails Open	Hoist will not operate in the down direction.	No effect.	3
			Fails Closed	Load block can continue downward motion until load block contacts floor. Requires operator error to contact load block to floor. Observers at floor level will warn operator of possible contact.	No effect.	3
I:2,3,B1	PLC Input	De-energizes when geared lower limit switch is tripped	Fails De-energized	Hoist will not operate in the down direction.	No effect.	3
			Fails Energized	Load block can continue downward motion until load block contacts floor. Requires operator error to contact load block to floor. Observers at floor level will warn operator of possible contact.	No effect.	3
None	Auxiliary Hoist First Upper Limit Switch	Switch opens when load block reaches first upper limit, marking end of travel	Fails Open	Hoist will not operate in the up direction. Hoist will operate in the down direction.	No effect.	3
			Fails Closed	Hoist motion can continue in the up direction until the Final Upper Limit Switch is tripped, removing all power from the crane. Requires operator error to trip Upper Limit switch.	No effect.	3
I:2,3,B2	PLC Input	De-energizes when First Upper Limit Switch is tripped	Fails De-energized	Hoist will not operate in the up direction. Hoist will operate in the down direction.	No effect.	3

Table 20. **Electrical FMEA - Auxiliary Hoist Primary Mode**

System/Subsystem: 325 Ton Bridge Cranes at the Vehicle Assembly Building High Bays 1/2/3/4 / Auxiliary Hoist
PMN: H72-1200-01, -02
Drawing No.: EB-2508
Reference Figure: None

Find No. Part No.	Part Name	Part Function	a. Failure Mode b. Cause c. FMN d. Detection Method e. Correcting Action f. Time to Effect g. Timeframe	Failure Effect On System Performance	Failure Effect On Vehicle Systems And/Or Personnel Safety	Crit Cat
			Fails Energized	Hoist motion can continue in the up direction until the Final Upper Limit Switch is tripped, removing all power from the crane. Requires operator error to trip Upper Limit switch.	No effect.	3
None	Auxiliary Hoist Equalizer Travel Limit Switch (2 each)	Switch opens when equalizer has excessive travel, indicating improper wire rope spooling	Fails Open	Hoist will be disabled and brakes will be set. Backing out of error requires use of bypass key.	No effect.	3
			Fails Closed	Requires previous failure in rope spooling on wire rope drum. Rope spooling limit switch will trip, preventing any further hoist motion up.	No effect.	3
I:2,4,B4	PLC Input	De-energizes when Equalizer Limit Switch is tripped	Fails De-energized	Hoist will be disabled and brakes will be set. Backing out of error requires use of bypass key.	No effect.	3
			Fails Energized	Requires previous failure in rope spooling on wire rope drum. Rope spooling limit switch will trip, preventing any further hoist motion up.	No effect.	3
None	Auxiliary Hoist Rope Spooling Limit Switch (4 each)	Switch opens when wire rope spools improperly	Fails Open	Hoist will be disabled and brakes will be set. Backing out of error requires use of bypass key.	No effect.	3

Table 20. **Electrical FMEA - Auxiliary Hoist Primary Mode**

System/Subsystem: 325 Ton Bridge Cranes at the Vehicle Assembly Building High Bays 1/2/3/4 / Auxiliary Hoist
PMN: H72-1200-01, -02

Drawing No.: EB-2508
Reference Figure: None

Find No. Part No.	Part Name	Part Function	a. Failure Mode b. Cause c. FMN d. Detection Method e. Correcting Action f. Time to Effect g. Timeframe	Failure Effect On System Performance	Failure Effect On Vehicle Systems And/Or Personnel Safety	Crit Cat
			Fails Closed	Requires previous failure in rope spooling on wire rope drum. If improper spooling persists, equalizer travel will become excessive, tripping equalizer limit switch and preventing any further hoist motion up.	No effect.	3
I:2,4,B5	PLC Input	De-energizes when rope spooling limit switch is tripped	Fails De-energized	Hoist will be disabled and brakes will be set. Backing out of error requires use of bypass key.	No effect.	3
			Fails Energized	Requires previous failure in rope spooling on wire rope drum. If improper spooling persists, equalizer travel will become excessive, tripping equalizer limit switch and preventing any further hoist motion up.	No effect.	3
GO:11,03	PLC Output	Supplies power to equalizer travel error light on control console	Fails De-energized	Equalizer travel error light will not illuminate when error occurs. Hoist will be disabled and brakes will be set.	No effect.	3
			Fails Energized	Equalizer travel error light will remain illuminated continuously. Hoist will operate normally.	No effect.	3
None	Indicator Light	Indicates when equalizer travel error has occurred	Fails Open	Equalizer travel error light will not illuminate when error occurs. Hoist will be disabled and brakes will be set.	No effect.	3

Table 20. **Electrical FMEA - Auxiliary Hoist Primary Mode**

System/Subsystem: 325 Ton Bridge Cranes at the Vehicle Assembly Building High Bays 1/2/3/4 / Auxiliary Hoist
PMN: H72-1200-01, -02

Drawing No.: EB-2508
Reference Figure: None

Find No. Part No.	Part Name	Part Function	a. Failure Mode b. Cause c. FMN d. Detection Method e. Correcting Action f. Time to Effect g. Timeframe	Failure Effect On System Performance	Failure Effect On Vehicle Systems And/Or Personnel Safety	Crit Cat
			Fails Shorted	When equalizer travel error occurs, short will cause overload in control circuit causing FU13 to blow. Hoist drives will be disabled and brakes will set.	No effect.	3
GO:11,04	PLC Output	Supplies power to rope spooling error light on control panel	Fails De-energized	Rope spooling error light will not illuminate when error occurs. Hoist will be disabled and brakes will be set.	No effect.	3
			Fails Energized	Rope spooling error light will remain illuminated continuously. Hoist will operate normally.	No effect.	3
None	Indicator Light	Indicates when rope spooling error has occurred	Fails Open	Rope spooling error light will not illuminate when error occurs. Hoist will be disabled and brakes will set.	No effect.	3
			Fails Shorted	When rope spooling error occurs, short will cause overload in control circuit causing FU13 to blow. Hoist will be disabled and brakes will set.	No effect.	3
GO:11,05	PLC Output	Supplies power to field weaken permissive light on control console	Fails De-energized	Field weaken permissive light will not illuminate when field weaken operation is allowed. Field weaken speed will operate normally.	No effect.	3
			Fails Energized	Field weaken permissive light will remain illuminated continuously.	No effect.	3
None	Indicator Light	Indicates when field weaken speed is allowed	Fails Open	Field weaken permissive light will not illuminate when field weaken operation is allowed. Field weaken speed will operate normally.	No effect.	3

Table 20. **Electrical FMEA - Auxiliary Hoist Primary Mode**

System/Subsystem: 325 Ton Bridge Cranes at the Vehicle Assembly Building High Bays 1/2/3/4 / Auxiliary Hoist
PMN: H72-1200-01, -02
Drawing No.: EB-2508
Reference Figure: None

Find No. Part No.	Part Name	Part Function	a. Failure Mode b. Cause c. FMN d. Detection Method e. Correcting Action f. Time to Effect g. Timeframe	Failure Effect On System Performance	Failure Effect On Vehicle Systems And/Or Personnel Safety	Crit Cat
			Fails Shorted	When field weaken speed is permitted, short will cause overload in control circuit causing FU13 to blow. Hoist drives will be disabled and brakes will set.	No effect.	3
I:2,5,B7	PLC Input	Energized when relay AWBR contact closes	Fails De-energized	PLC will detect blower shut down, set error bit, disable drives and set brakes.	No effect.	3
			Fails Energized	PLC will not detect blower shut down. Hoist motor will overheat. Overheat sensors will detect overheat condition. PLC will disable drives and set brakes.	No effect.	3
AWDC	Auxiliary Hoist West DC Contactor Relay	Energizes when Auxiliary Hoist west drive is enabled	Fails De-energized	DC armature loop will open. PLC will detect load imbalance and disable drives and set brakes at end of commanded motion.	No effect.	3
			Fails Energized	DC motor armature loop will remain closed. PLC will disable drives and set brakes.	No effect.	3
	Contact	Closes to complete DC armature loop of Auxiliary Hoist west motor	Fails Open	DC armature loop will remain open. PLC will detect load imbalance and disable drives and set brakes at end of commanded motion.	No effect.	3
			Fails Closed	DC motor armature loop will remain closed. PLC will disable drives and set brakes.	No effect.	3
	Contact	Closes to enable AWFSA and AWMCM	Fails Open	AWFSA will not enable AWMCM. Hoist will not operate, brakes will (remain) set.	No effect.	3

Table 20. **Electrical FMEA - Auxiliary Hoist Primary Mode**

System/Subsystem: 325 Ton Bridge Cranes at the Vehicle Assembly Building High Bays 1/2/3/4 / Auxiliary Hoist
PMN: H72-1200-01, -02
Drawing No.: EB-2508
Reference Figure: None

Find No. Part No.	Part Name	Part Function	a. Failure Mode b. Cause c. FMN d. Detection Method e. Correcting Action f. Time to Effect g. Timeframe	Failure Effect On System Performance	Failure Effect On Vehicle Systems And/Or Personnel Safety	Crit Cat
			Fails Closed	Other AWDC contact will open DC motor armature loop. PLC will disable drives and set brakes.	No effect.	3
AEDC	Auxiliary Hoist East DC Contactor Relay	Energizes when Auxiliary Hoist East drive is enables	Fails De-energized	DC armature loop will open. PLC will detect load imbalance and disable drives and set brakes at end of commanded motion.	No effect.	3
			Fails Energized	DC armature loop will remain closed. PLC will disable drives and set brakes.	No effect.	3
	Contact	Closes to complete DC armature loop of Auxiliary Hoist East motor	Fails Open	DC armature loop will remain open. PLC will detect load imbalance and disable drives and set brakes at end of commanded motion.	No effect.	3
			Fails Closed	DC motor armature loop will remain closed. PLC will disable drives and set brakes.	No effect.	3
	Contact	Closes to enable AEFSA and AEMCM	Fails Open	AEFSA will not enable AEMCM. Hoist will not operate; brakes will (remain) set.	No effect.	3
			Fails Closed	Other AEDC contact will open DC motor armature loop. PLC will disable drives and set brakes.	No effect.	3
O:1,7,B1	PLC Output	Supplies power to energize relay AWDE and PLC input	Fails De-energized	Relay AWDE will not be energized. West drive will not be enabled. Hoist will not operate.	No effect.	3
			Fails Energized	Other PLC output will De-energize relay AWDE.	No effect.	3

Table 20. **Electrical FMEA - Auxiliary Hoist Primary Mode**

System/Subsystem: 325 Ton Bridge Cranes at the Vehicle Assembly Building High Bays 1/2/3/4 / Auxiliary Hoist
PMN: H72-1200-01, -02
Drawing No.: EB-2508
Reference Figure: None

Find No. Part No.	Part Name	Part Function	a. Failure Mode b. Cause c. FMN d. Detection Method e. Correcting Action f. Time to Effect g. Timeframe	Failure Effect On System Performance	Failure Effect On Vehicle Systems And/Or Personnel Safety	Crit Cat
O:1,8B3	PLC Output	Supplies power to energize relay AWDE and PLC input	Fails De-energized	Relay AWDE will not be energized. West drive will not be enabled. Hoist will not operate.	No effect.	3
			Fails Energized	Other PLC output will De-energize relay AWDE.	No effect.	3
I:2,3,B3	PLC Input	Energizes when power is supplied to relay AWDE	Fails De-energized	PLC will detect East and west drive circuit Breaker configuration does not match drive select switch. PLC will not allow hoist to operate, brakes will remain set.	No effect.	3
			Fails Energized	AWDE contacts will disable AWMCM and cause AWDC contactor to open DC motor armature loop. PLC will disable drives and set brakes.	No effect.	3
AWDE	Auxiliary Hoist West Drive Enable Relay	Energizes when Auxiliary Hoist west drive is enabled by PLC and relay AWRDY and AWFLT	Fails De-energized	AWDE contacts will not enable AWMCM or cause AWDC relay to close DC motor armature loop. PLC will disable drives and set brakes.	No effect.	3
			Fails Energized	Requires previous failure to de-energize. Previous failures will have either faulted the motor control module or were detected by the PLC. Drives will be disabled and brakes will set.	No effect.	3

Table 20. **Electrical FMEA - Auxiliary Hoist Primary Mode**

System/Subsystem: 325 Ton Bridge Cranes at the Vehicle Assembly Building High Bays 1/2/3/4 / Auxiliary Hoist
PMN: H72-1200-01, -02
Drawing No.: EB-2508
Reference Figure: None

Find No. Part No.	Part Name	Part Function	a. Failure Mode b. Cause c. FMN d. Detection Method e. Correcting Action f. Time to Effect g. Timeframe	Failure Effect On System Performance	Failure Effect On Vehicle Systems And/Or Personnel Safety	Crit Cat
	Contact	Closes to supply power to relay AWDC	Fails Open	Relay AWDC will not energize to complete DC motor armature loop. PLC will detect load imbalance and disable drives and set brakes at end of commanded motion.	No effect.	3
			Fails Closed	Requires previous failure to de-energize. Previous failures will have either faulted the motor control module or were detected by the PLC. Drives will be disabled and brakes will set.	No effect.	3
	Contact	Closes to enable AWMCM	Fails Open	Motor control module will not be enabled. Hoist will not operate, brakes will (remain) set.	No effect.	3
			Fails Closed	Requires previous failure to de-energize. Previous failures will have either faulted the motor control module or were detected by the PLC. Drives will be disabled and brakes will set.	No effect.	3
O:1,7,B2	PLC Output	Supplies power to energize relay AEDE and PLC input	Fails De-energized	Relay AEDE will not be energized. East drive will not be enabled. Hoist will not operate.	No effect.	3
			Fails Energized	Other PLC output will de-energize relay AEDE.	No effect.	3
O:1,8,C1	PLC Output	Supplies power to energize relay AEDE and PLC input	Fails De-energized	Relay AEDE will not be energized. East drive will not be enabled. Hoist will not operate.	No effect.	3
			Fails Energized	Other PLC output will de-energize relay AEDE.	No effect.	3

Table 20. **Electrical FMEA - Auxiliary Hoist Primary Mode**

System/Subsystem: 325 Ton Bridge Cranes at the Vehicle Assembly Building High Bays 1/2/3/4 / Auxiliary Hoist
PMN: H72-1200-01, -02

Drawing No.: EB-2508
Reference Figure: None

Find No. Part No.	Part Name	Part Function	a. Failure Mode b. Cause c. FMN d. Detection Method e. Correcting Action f. Time to Effect g. Timeframe	Failure Effect On System Performance	Failure Effect On Vehicle Systems And/Or Personnel Safety	Crit Cat
I:2,3,B4	PLC Input	Energizes when power is supplied to relay AEDE	Fails De-energized	PLC will detect circuit Breaker does not match drive select switch. PLC will not allow hoist to operate, brakes will remain set.	No effect.	3
			Fails Energized	AEDE contacts will disable AEMCM and cause AEDC relay to open DC motor armature loop. PLC will disable drives and set brakes.	No effect.	3
AEDE	Auxiliary Hoist East Drive Enable Relay	Energizes when Auxiliary Hoist East drive is enabled by PLC and relays AERDY and AEFLT	Fails De-energized	AEDE contacts will not enable AEMCM or cause AEDC relays to close DC motor armature loop. PLC will disable drives and set brakes.	No effect.	3
			Fails Energized	Requires previous failures to de-energize. Previous failures will have either faulted the motor control module or were detected by the PLC. Drives will be disabled and brakes will set.	No effect.	3
	Contact	Closes to supply power to relay AEDC	Fails Open	Relay AEDC will not energize to complete DC motor armature loop. PLC will detect load imbalance and disable drives and set brakes at end of commanded motion.	No effect.	3
			Fails Closed	Requires previous failures to de-energize. Previous failures will have either faulted the motor control module or were detected by the PLC. Drives will disabled and brakes will set.	No effect.	3

Table 20. **Electrical FMEA - Auxiliary Hoist Primary Mode**

System/Subsystem: 325 Ton Bridge Cranes at the Vehicle Assembly Building High Bays 1/2/3/4 / Auxiliary Hoist
PMN: H72-1200-01, -02
Drawing No.: EB-2508
Reference Figure: None

Find No. Part No.	Part Name	Part Function	a. Failure Mode b. Cause c. FMN d. Detection Method e. Correcting Action f. Time to Effect g. Timeframe	Failure Effect On System Performance	Failure Effect On Vehicle Systems And/Or Personnel Safety	Crit Cat
	Contact	Closes to enable AEMCM	Fails Open	Motor control module will not be enabled. Hoist will not operate. Brakes will (remain) set.	No effect.	3
			Fails Closed	Requires previous failures to de-energize. Previous failures will have either faulted the motor control module or were detected by the PLC. Drives will disabled and brakes will set.	No effect.	3
O:1,7,B3	PLC Output	Supplies power to energize relays ABACW, ABDCW and PLC input	Fails De-energized	West brake will not release when commanded by PLC. Motors will attempt to drive through brake. Delta Tau motion controller will detect following error and send error message to PLC. PLC will disable hoist drives and set brakes.	No effect.	3
			Fails Energized	No effect. West brake will not release until both PLC outputs energize.	No effect.	3
O:1,8,C2	PLC Output	Supplies power to energize relays ABACW, ABDCW and PLC input	Fails De-energized	West brake will not release when commanded by PLC. Motors will attempt to drive through brake. Delta Tau motion controller will detect following error and send error message to PLC. PLC will disable hoist drives and set brakes.	No effect.	3
			Fails Energized	No effect. West brake will not release until both PLC outputs energize.	No effect.	3

Table 20. **Electrical FMEA - Auxiliary Hoist Primary Mode**

System/Subsystem: 325 Ton Bridge Cranes at the Vehicle Assembly Building High Bays 1/2/3/4 / Auxiliary Hoist
PMN: H72-1200-01, -02
Drawing No.: EB-2508
Reference Figure: None

Find No. Part No.	Part Name	Part Function	a. Failure Mode b. Cause c. FMN d. Detection Method e. Correcting Action f. Time to Effect g. Timeframe	Failure Effect On System Performance	Failure Effect On Vehicle Systems And/Or Personnel Safety	Crit Cat
ABACW	Auxiliary Hoist Brake AC West Relay	Energizes when PLC commands brakes to release	Fails De-energized	West brake will not release when commanded by PLC. Motors will attempt to drive through brake. Delta Tau motion controller will detect following error and send error message to PLC. PLC will disable hoist drives and set brakes.	No effect.	3
			Fails Energized	No effect. West brake will not release until both PLC outputs energize.	No effect.	3
	Contacts (1 of 2)	Close to supply power to ARECT1 in AC portion of brake circuit	Fails Open	West brake will not release when commanded by PLC. Motors will attempt to drive through brake. Delta Tau motion controller will detect following error and send error message to PLC. PLC will disable hoist drives and set brakes.	No effect.	3
			Fails Closed	No effect. Other ABACW contact and ABDCW contacts will open to de-energize brake coil.	No effect.	3
ABDCW	Auxiliary Hoist Brake DC West Relay	Energizes when PLC commands brakes to release	Fails De-energized	West brake will not release when commanded by PLC. Motors will attempt to drive through brake. Delta Tau motion controller will detect following error and send error message to PLC. PLC will disable hoist drives and set brakes.	No effect.	3
			Fails Energized	No effect. West brake will not release until both brake relays are energized.	No effect.	3

Table 20. **Electrical FMEA - Auxiliary Hoist Primary Mode**

System/Subsystem: 325 Ton Bridge Cranes at the Vehicle Assembly Building High Bays 1/2/3/4 / Auxiliary Hoist
PMN: H72-1200-01, -02
Drawing No.: EB-2508
Reference Figure: None

Find No. Part No.	Part Name	Part Function	a. Failure Mode b. Cause c. FMN d. Detection Method e. Correcting Action f. Time to Effect g. Timeframe	Failure Effect On System Performance	Failure Effect On Vehicle Systems And/Or Personnel Safety	Crit Cat
	Contacts (1 of 2)	Close to supply DC power to Auxiliary Hoist West brake solenoid	Fails Open	West brake will not release when commanded by PLC. Motors will attempt to drive through brake. Delta Tau motion controller will detect following error and send error message to PLC. PLC will disable hoist drives and set brakes.	No effect.	3
			Fails Closed	No effect. Other ABDCW contact and ABACW contacts will open to de-energize brake coil.	No effect.	3
O:1,7,B4	PLC Output	Supplies power to energize relays ABACE, ABDCE and PLC input	Fails De-energized	East brake will not release when commanded by PLC. Motors will attempt to drive through brake. Delta Tau motion controller will detect following error and send error message to PLC. PLC will disable hoist drives and set brakes.	No effect.	3
			Fails Energized	No effect. East brake will not release until both brake relays are energized.	No effect.	3
O:1,8,C3	PLC Output	Supplies power to energize relays ABACE, ABDCE and PLC input	Fails De-energized	East brake will not release when commanded by PLC. Motors will attempt to drive through brake. Delta Tau motion controller will detect following error and send error message to PLC. PLC will disable hoist drives and set brakes.	No effect.	3
			Fails Energized	No effect. East brake will not release until both brake relays are energized.	No effect.	3

Table 20. **Electrical FMEA - Auxiliary Hoist Primary Mode**

System/Subsystem: 325 Ton Bridge Cranes at the Vehicle Assembly Building High Bays 1/2/3/4 / Auxiliary Hoist
PMN: H72-1200-01, -02
Drawing No.: EB-2508
Reference Figure: None

Find No. Part No.	Part Name	Part Function	a. Failure Mode b. Cause c. FMN d. Detection Method e. Correcting Action f. Time to Effect g. Timeframe	Failure Effect On System Performance	Failure Effect On Vehicle Systems And/Or Personnel Safety	Crit Cat
ABACE	Auxiliary Hoist Brake AC East Relay	Energizes when PLC commands brakes to release	Fails De-energized	East brake will not release when commanded by PLC. Motors will attempt to drive through brake. Delta Tau motion controller will detect following error and send error message to PLC. PLC will disable hoist drives and set brakes.	No effect.	3
			Fails Energized	No effect. East brake will not release until both brake relays are energized.	No effect.	3
	Contacts (1 of 2)	Close to supply DC power to ARECT2 in AC portion of brake circuit	Fails Open	East brake will not release when commanded by PLC. Motors will attempt to drive through brake. Delta Tau motion controller will detect following error and send error message to PLC. PLC will disable hoist drives and set brakes.	No effect.	3
			Fails Closed	No effect. Other ABACE contact and ABDCE contacts will open to de-energize brake coil.	No effect.	3
ABDCE	Auxiliary Hoist Brake DC East Relay	Energizes when PLC commands brakes to release	Fails De-energized	East brake will not release when commanded by PLC. Motors will attempt to drive through brake. Delta Tau motion controller will detect following error and send error message to PLC. PLC will disable hoist drives and set brakes.	No effect.	3
			Fails Energized	No effect. East brake will not release until both brake relays are energized.	No effect.	3

Table 20. **Electrical FMEA - Auxiliary Hoist Primary Mode**

System/Subsystem: 325 Ton Bridge Cranes at the Vehicle Assembly Building High Bays 1/2/3/4 / Auxiliary Hoist
PMN: H72-1200-01, -02
Drawing No.: EB-2508
Reference Figure: None

Find No. Part No.	Part Name	Part Function	a. Failure Mode b. Cause c. FMN d. Detection Method e. Correcting Action f. Time to Effect g. Timeframe	Failure Effect On System Performance	Failure Effect On Vehicle Systems And/Or Personnel Safety	Crit Cat
	Contacts (1 of 2)	Close to supply DC power to Auxiliary Hoist East brake solenoid	Fails Open	East brake will not release when commanded by PLC. Motors will attempt to drive through brake. Delta Tau motion controller will detect following error and send error message to PLC. PLC will disable hoist drives and set brakes.	No effect.	3
			Fails Closed	No effect. Other ABDCE contact and ABACE contacts will open to de-energize brake coil.	No effect.	3
O:1,8,D1	PLC Output	Supplies power to energize relays ABF1 and ABF2	Fails De-energized	PLC will detect relays ABF1 and ABF2 not energized. PLC will disable hoist drives. Brakes will remain set.	No effect.	3
			Fails Energized	PLC will detect relays ABF1 and ABF2 are energized continuously. PLC will disable hoist drives. Brake will (remain) set.	No effect.	3
ABF1	Auxiliary Hoist Brake Forcing Relay	Energizes when PLC commands brakes to release to fully release brakes then de-energizes to set lower holding current	Fails De-energized	Holding current will be applied to release brake. Brake will only partially release or will not release at all. Motors will attempt to drive through brake. Delta Tau motion controller will detect following error and send error message to PLC. PLC will disable hoist drives and set brakes.	No effect.	3

Table 20. **Electrical FMEA - Auxiliary Hoist Primary Mode**

System/Subsystem: 325 Ton Bridge Cranes at the Vehicle Assembly Building High Bays 1/2/3/4 / Auxiliary Hoist
PMN: H72-1200-01, -02
Drawing No.: EB-2508
Reference Figure: None

Find No. Part No.	Part Name	Part Function	a. Failure Mode b. Cause c. FMN d. Detection Method e. Correcting Action f. Time to Effect g. Timeframe	Failure Effect On System Performance	Failure Effect On Vehicle Systems And/Or Personnel Safety	Crit Cat
			Fails Energized	Full current will continuously be applied to brake coil when brakes are released. Continued use will cause brake coil to overheat and be damaged by high current, resulting in brake setting. Motors will attempt to drive through brake. Delta Tau motion controller will detect following error and send error message to PLC. PLC will disable hoist drives and set brakes.	No effect.	3
	Contacts (1 of 2)	Close to bypass resistor ABR1	Fails Open	Holding current will be applied to release brake. Brake will only partially release or will not release at all. Motors will attempt to drive through brake. Delta Tau motion controller will detect following error and send error message to PLC. PLC will disable hoist drives and set brakes.	No effect.	3
			Fails Closed	No effect. Other ABF1 contact will open to bypass circuit.	No effect.	3
ABF2	Auxiliary Hoist Brake Forcing Relay	Energizes when PLC commands brakes to release to fully release brakes then de-energizes to set lower holding current	Fails De-energized	Holding current will be applied to release brake. Brake will only partially release or will not release at all. Motors will attempt to drive through brake. Delta Tau motion controller will detect following error and send error message to PLC. PLC will disable hoist drives and set brakes.	No effect.	3

Table 20. **Electrical FMEA - Auxiliary Hoist Primary Mode**

System/Subsystem: 325 Ton Bridge Cranes at the Vehicle Assembly Building High Bays 1/2/3/4 / Auxiliary Hoist
PMN: H72-1200-01, -02
Drawing No.: EB-2508
Reference Figure: None

Find No. Part No.	Part Name	Part Function	a. Failure Mode b. Cause c. FMN d. Detection Method e. Correcting Action f. Time to Effect g. Timeframe	Failure Effect On System Performance	Failure Effect On Vehicle Systems And/Or Personnel Safety	Crit Cat
			Fails Energized	Full current will continuously be applied to brake coil when brakes are released. Continued use will cause brake coil to overheat and be damaged by high current, resulting in brake setting. Motors will attempt to drive through brake. Delta Tau motion controller will detect following error and send error message to PLC. PLC will disable hoist drives and set brakes.	No effect.	3
	Contacts (1 of 2)	Close to bypass resistor ABR3	Fails Open	Holding current will be applied to release brake. Brake will only partially release or will not release at all. Motors will attempt to drive through brake. Delta Tau motion controller will detect following error and send error message to PLC. PLC will disable hoist drives and set brakes.	No effect.	3
			Fails Closed	No effect. Other ABF1 contact will open to bypass circuit.	No effect.	3
None	PLC Input	Energizes when brake forcing relays are energized	Fails De-energized	PLC will detect brake forcing has not occurred. PLC will not allow hoist to operate.	No effect.	3
			Fails Energized	PLC will detect that brake forcing relays are continuously energized, disable hoist and set brakes.	No effect.	3

Table 20. **Electrical FMEA - Auxiliary Hoist Primary Mode**

System/Subsystem: 325 Ton Bridge Cranes at the Vehicle Assembly Building High Bays 1/2/3/4 / Auxiliary Hoist
PMN: H72-1200-01, -02
Drawing No.: EB-2508
Reference Figure: None

Find No. Part No.	Part Name	Part Function	a. Failure Mode b. Cause c. FMN d. Detection Method e. Correcting Action f. Time to Effect g. Timeframe	Failure Effect On System Performance	Failure Effect On Vehicle Systems And/Or Personnel Safety	Crit Cat
None	Auxiliary Hoist position display source selector switch	Opens to select west encoder as position display source	Fails Open	Loss of ability to switch from west encoder to East encoder as position display source.	No effect.	3
			Fails Closed	Loss of ability to switch from East encoder to west encoder as position display source.	No effect.	3
GI:06,IN11	PLC Input	Energizes when position display source selector switch is closed selecting East encoder as display source	Fails De-energized	Loss of ability to switch from west encoder to East encoder as position display source.	No effect.	3
			Fails Energized	Loss of ability to switch from East encoder to west encoder as position display source.	No effect.	3
None	Auxiliary Hoist Rope spooling and equalizer travel error override switch	Closes to override error detected by rope spooling and equalizer travel limit switches	Fails Open	Unable to override rope spooling error if an error occurs. Hoist will be disabled and brakes will be set.	No effect.	3
			Fails Closed	PLC input will remain energized continuously. If rope spooling error occurs, hoist motion up will be disabled. Hoist motion down will be enabled to allow operator to back out of rope spooling error.	No effect.	3
GI:06,IN12	PLC Input	Energizes when rope spooling and equalizer travel error overrides switch is closed	Fails De-energized	Unable to override rope spooling error if an error occurs. Hoist will be disabled and brakes will be set.	No effect.	3

Table 20. **Electrical FMEA - Auxiliary Hoist Primary Mode**

System/Subsystem: 325 Ton Bridge Cranes at the Vehicle Assembly Building High Bays 1/2/3/4 / Auxiliary Hoist
PMN: H72-1200-01, -02
Drawing No.: EB-2508
Reference Figure: None

Find No. Part No.	Part Name	Part Function	a. Failure Mode b. Cause c. FMN d. Detection Method e. Correcting Action f. Time to Effect g. Timeframe	Failure Effect On System Performance	Failure Effect On Vehicle Systems And/Or Personnel Safety	Crit Cat
			Fails Energized	PLC input will remain energized continuously. If rope spooling error occurs, hoist motion up will be disabled. Hoist motion down will be enabled to allow operator to back out of rope spooling error.	No effect.	3
None	Auxiliary Hoist Display Reset Push Button	Closes to reset computer generated position display	Fails Open	Unable to zero out hoist position display.	No effect.	3
			Fails Closed	Hoist position display will be stuck in reset mode displaying ---.— and blanking out the indicator needle. Operator will not be able to continue operation until failure is repaired.	No effect.	3
GI:06,IN13	PLC Input	Energizes when display reset push button is pressed	Fails De-energized	Unable to zero out hoist position display.	No effect.	3
			Fails Energized	Hoist position display will be stuck in reset mode displaying ---.— and blanking out the indicator needle. Operator will not be able to continue operation until failure is repaired.	No effect.	3
O:2,2,A4	PLC Output	Supplies power to Auxiliary Hoist drive imbalance display and light on cab console	Fails De-energized	Hoist load imbalance light will not be illuminated when load imbalance occurs. PLC will disable hoist drives and set brakes when imbalance occurs. Requires previous failure to cause imbalance.	No effect.	3
			Fails Energized	Hoist imbalance light will remain illuminated continuously. Hoist will operate normally.	No effect.	3

Table 20. **Electrical FMEA - Auxiliary Hoist Primary Mode**

System/Subsystem: 325 Ton Bridge Cranes at the Vehicle Assembly Building High Bays 1/2/3/4 / Auxiliary Hoist
PMN: H72-1200-01, -02
Drawing No.: EB-2508
Reference Figure: None

Find No. Part No.	Part Name	Part Function	a. Failure Mode b. Cause c. FMN d. Detection Method e. Correcting Action f. Time to Effect g. Timeframe	Failure Effect On System Performance	Failure Effect On Vehicle Systems And/Or Personnel Safety	Crit Cat
None	Indicator Light	Illuminates to indicate Auxiliary Hoist has a load imbalance	Fails Open	Hoist load imbalance light will not be illuminated when load imbalance occurs. PLC will disable hoist drives and set brakes when imbalance occurs. Requires previous failure to cause imbalance.	No effect.	3
			Fails Shorted	When load imbalance occurs, current overload will trip circuit Breaker CCB if hoist imbalance occurs. CCB tripping will cause loss of control power to crane. All drives will be disabled and all brakes will be set.	No effect.	3
O:2,2,A5	PLC Output	Supplies power to energize relay AWBS	Fails De-energized	Relay AWBS will not be energized to start hoist blower motor or energize relay AWBR. AWBR contact will open, de-energizing PLC input. PLC will set error bit. PLC will decelerate hoist to stop and set brakes.	No effect.	3
			Fails Energized	No effect. Hoist blower motor will run whenever mainline contactor is closed.	No effect.	3
AWBS	Auxiliary Hoist West Blower Starter Relay	Energizes when commanded by PLC and AWBOL switch has not tripped	Fails De-energized	Contacts will not close to start hoist blower motor or energize relay AWBR. AWBR contact will open, de-energizing PLC input. PLC will set error bit. PLC will decelerate hoist to stop and set brakes.	No effect.	3

Table 20. **Electrical FMEA - Auxiliary Hoist Primary Mode**

System/Subsystem: 325 Ton Bridge Cranes at the Vehicle Assembly Building High Bays 1/2/3/4 / Auxiliary Hoist
PMN: H72-1200-01, -02
Drawing No.: EB-2508
Reference Figure: None

Find No. Part No.	Part Name	Part Function	a. Failure Mode b. Cause c. FMN d. Detection Method e. Correcting Action f. Time to Effect g. Timeframe	Failure Effect On System Performance	Failure Effect On Vehicle Systems And/Or Personnel Safety	Crit Cat
			Fails Energized	No effect. Hoist blower motor will run whenever mainline contactor is closed.	No effect.	3
	Contacts	Close to supply power to Auxiliary Hoist West Blower Motor	Fails Open	Contacts will not close to start hoist blower motor or energize relay AWBR. AWBR contact will open, de-energizing PLC input. PLC will set error bit. PLC will decelerate hoist to stop and set brakes.	No effect.	3
			Fails Closed	No effect. Hoist blower motor will run whenever mainline contactor is closed.	No effect.	3
O:2,2,A6	PLC Output	Supplies power to energize relay AEBS	Fails De-energized	Relay AEBS will not be energized to start hoist blower motor. PLC will set error bit. PLC will decelerate hoist to stop and set brakes.	No effect.	3
			Fails Energize	No effect. Hoist blower motor will run whenever mainline contactor is closed.	No effect.	3
AEBS	Auxiliary Hoist East Blower Starter Relay	Energizes when commanded by PLC and AEBOL switch has not tripped	Fails De-energized	Contacts will not close to start hoist blower motor. PLC will set error bit. PLC will decelerate hoist to stop and set brakes.	No effect.	3
			Fails Energize	No effect. Hoist blower motor will run whenever mainline contactor is closed.	No effect.	3
	Contacts	Close to supply power to Auxiliary Hoist East blower motor	Fails Open	Contacts will not close to start hoist blower motor. PLC will set error bit. PLC will decelerate hoist to stop and set brakes.	No effect.	3

Table 20. **Electrical FMEA - Auxiliary Hoist Primary Mode**

System/Subsystem: 325 Ton Bridge Cranes at the Vehicle Assembly Building High Bays 1/2/3/4 / Auxiliary Hoist
PMN: H72-1200-01, -02

Drawing No.: EB-2508
Reference Figure: None

Find No. Part No.	Part Name	Part Function	a. Failure Mode b. Cause c. FMN d. Detection Method e. Correcting Action f. Time to Effect g. Timeframe	Failure Effect On System Performance	Failure Effect On Vehicle Systems And/Or Personnel Safety	Crit Cat
			Fails Closed	No effect. Hoist blower motor will run whenever mainline contactor is closed.	No effect.	3
None	Cruise Control Start Switch	Closes to energize PLC inputs, signaling PLC to start cruise function selected	Fails Open	Cruise function selected will not operate. PLC requires both inputs to be energized to set cruise bit.	No effect.	3
			Fails Closed	Cruise function will not operate until both start inputs are energized and hoist motion has already been initiated.	No effect.	3
GI:10,IN8	PLC Input	Energizes when cruise control start push button is pressed	Fails De-energized	Cruise function selected will not operate. PLC requires both inputs to be energized to set cruise bit.	No effect.	3
			Fails Energized	Cruise function will not operate until both start inputs are energized and hoist motion has already been initiated.	No effect.	3
None	Cruise Control Stop Switch	Dual contact switch that closes to energize PLC inputs, signaling PLC to stop cruise function operating				
		First of 2 contacts	Fails Open	Other switch contact will close to energize PLC input, stopping cruise function.	No effect.	3
			Fails Closed	Cruise functions will not operate.	No effect.	3

Table 20. **Electrical FMEA - Auxiliary Hoist Primary Mode**

System/Subsystem: 325 Ton Bridge Cranes at the Vehicle Assembly Building High Bays 1/2/3/4 / Auxiliary Hoist
PMN: H72-1200-01, -02

Drawing No.: EB-2508
Reference Figure: None

Find No. Part No.	Part Name	Part Function	a. Failure Mode b. Cause c. FMN d. Detection Method e. Correcting Action f. Time to Effect g. Timeframe	Failure Effect On System Performance	Failure Effect On Vehicle Systems And/Or Personnel Safety	Crit Cat
		Second of 2 contacts	Fails Open	Other switch contact will close to energize PLC input, stopping cruise function.	No effect.	3
			Fails Closed	Cruise functions will not operate.	No effect.	3
GI:9,IN14	PLC Input	Energizes when cruise control stop push button is pressed	Fails De-energized	Other PLC input will be energized, stopping cruise function. Second failure would cause cruise parameter (distance or time to move) to stop hoist motion. Operator can stop hoist motion by switching off control power or pressing E-stop.	No effect.	3
			Fails energized	Cruise functions will not operate.	No effect.	3
GI:10,IN10	PLC Input	Energizes when cruise control stop push button is pressed	Fails De-energized	Other PLC input will be energized, stopping cruise function. Second failure would cause cruise parameter (distance or time to move) to stop hoist motion. Operator can stop hoist motion by switching off control power or pressing E-stop.	No effect.	3
			Fails Energized	Cruise functions will not operate.	No effect.	3
None	Auxiliary Hoist Drive Selector Switch	Closes to energize PLC inputs, signaling PLC enable selected drive(s)	Fails Open	PLC will detect drive select switch does not match circuit Breaker. Hoist drives will be disabled and brakes will be set.	No effect.	3
			Fails Closed	Will cause encoder compare fault or will cause PLC fault in single drive operation. PLC will disable drives and brakes will be set.	No effect.	3

Table 20. **Electrical FMEA - Auxiliary Hoist Primary Mode**

System/Subsystem: 325 Ton Bridge Cranes at the Vehicle Assembly Building High Bays 1/2/3/4 / Auxiliary Hoist
PMN: H72-1200-01, -02

Drawing No.: EB-2508
Reference Figure: None

Find No. Part No.	Part Name	Part Function	a. Failure Mode b. Cause c. FMN d. Detection Method e. Correcting Action f. Time to Effect g. Timeframe	Failure Effect On System Performance	Failure Effect On Vehicle Systems And/Or Personnel Safety	Crit Cat
I:2,5,C8	PLC Input	Energizes when Auxiliary Hoist West drive only is selected	Fails De-energized	Will cause PLC fault. PLC will disable drive and brakes will be set.	No effect.	3
			Fails Energized	Will cause PLC fault during East drive only operation. PLC will disable drives and brakes will be set.	No effect.	3
I:2,5,D1	PLC Input	Energizes when both Auxiliary Hoist drives are selected	Fails De-energized	PLC will detect drive select switch does not match circuit Breaker. Hoist drives will be disabled and brakes will be set.	No effect.	3
			Fails Energized	Will cause encoder compare fault or will cause PLC fault in single drive operation. PLC will disable drives and brakes will be set.	No effect.	3
I:2,5,D2	PLC Input	Energizes when Auxiliary Hoist East Drive only is selected	Fails De-energized	Will cause PLC fault. PLC will disable drive and brakes will be set.	No effect.	3
			Fails Energized	Will cause PLC fault during west drive only operation. PLC will disable drives and brakes will be set.	No effect.	3

Table 20. **Electrical FMEA - Auxiliary Hoist Primary Mode**

System/Subsystem: 325 Ton Bridge Cranes at the Vehicle Assembly Building High Bays 1/2/3/4 / Auxiliary Hoist
PMN: H72-1200-01, -02
Drawing No.: EB-2508
Reference Figure: None

Find No. Part No.	Part Name	Part Function	a. Failure Mode b. Cause c. FMN d. Detection Method e. Correcting Action f. Time to Effect g. Timeframe	Failure Effect On System Performance	Failure Effect On Vehicle Systems And/Or Personnel Safety	Crit Cat
ABFU1, ABFU2	Fuse	Protects upstream circuitry from overloads in Auxiliary Hoist Brake circuit	Prematurely Operates	Loss of power to brake coil circuit. Brakes will (remain) set. Hoist will attempt to drive through brakes. Will cause Delta Tau board to detect following error or excessive accel/decel, disabling drives. Operator can detect audible setting of hoist brakes and excessive current for hoist motors indicated on control cab console ammeters.	No effect.	3
			Fails to Operate	Opposite fuse will protect circuitry from overloads. Requires previous failure to cause overload. Will result in brakes setting.	No effect.	3
ABT	Auxiliary Hoist Brake Transformer	Converts 480 VAC to 240 VAC for Auxiliary Hoist Brake circuit	Fails Open	Loss of power to brake coil circuit. Brakes will (remain) set. Hoist will attempt to drive through brakes. PLC will detect load imbalance or Delta Tau board to detect following error or excessive accel/decel, disabling drives. Operator can detect audible setting of hoist brakes and excessive current for hoist motors indicated on control cab console ammeters.	No effect.	3
			Fails Shorted	ABFU1 and ABFU2 will protect circuitry from overload. Will result in brakes setting.	No effect.	3

Table 20. **Electrical FMEA - Auxiliary Hoist Primary Mode**

System/Subsystem: 325 Ton Bridge Cranes at the Vehicle Assembly Building High Bays 1/2/3/4 / Auxiliary Hoist
PMN: H72-1200-01, -02

Drawing No.: EB-2508
Reference Figure: None

Find No. Part No.	Part Name	Part Function	a. Failure Mode b. Cause c. FMN d. Detection Method e. Correcting Action f. Time to Effect g. Timeframe	Failure Effect On System Performance	Failure Effect On Vehicle Systems And/Or Personnel Safety	Crit Cat
ABFU3	Fuse	Protects upstream circuitry from overloads in Auxiliary Hoist Brake circuit	Prematurely operates	Loss of power to hoist brake coils causing brakes to set. Motors will attempt to drive through brakes. PLC will detect load imbalance or Delta Tau board to detect following error or excessive accel/decel, disabling drives. Operator can detect audible setting of hoist brakes and excessive current for hoist motors indicated on control cab console ammeters.	No effect.	3
			Fails to Operate	ABFU1 and ABFU2 will protect circuitry against overloads. Requires previous failure to cause overload. Will result in loss of power to brake coil circuit. Brakes will (remain) set. Hoist will attempt to drive through brakes. PLC will detect load imbalance or Delta Tau board to detect following error or excessive accel/decel, disabling drives. Operator can detect audible setting of hoist brakes and excessive current for hoist motors indicated on control cab console ammeters.	No effect.	3

Table 20. **Electrical FMEA - Auxiliary Hoist Primary Mode**

System/Subsystem: 325 Ton Bridge Cranes at the Vehicle Assembly Building High Bays 1/2/3/4 / Auxiliary Hoist
PMN: H72-1200-01, -02
Drawing No.: EB-2508
Reference Figure: None

Find No. Part No.	Part Name	Part Function	a. Failure Mode b. Cause c. FMN d. Detection Method e. Correcting Action f. Time to Effect g. Timeframe	Failure Effect On System Performance	Failure Effect On Vehicle Systems And/Or Personnel Safety	Crit Cat
AMOV1, AMOV2	Auxiliary Hoist Meter Oxide Varistor	Becomes and electrical short when voltage exceeds a set level	Fails Open	Loss of overvoltage protection to brake coil circuit. Overvoltage condition can cause damage of circuit and loss of power to one hoist brake coil causing single brake to set. Motors will attempt to drive through brake. PLC will detect load imbalance between motors due to added resistance to one drive train or PLC will detect error between excoders when opposite motor takes up backlash in the drive system.	No effect.	3
			Fails Shorted	ABFU3 will blow when current overload occurs leading to loss of power to brake coils. Motors will attempt to drive through brakes. PLC will detect load imbalance or Delta Tau board will detect following error or excessive accel/decel, disabling drives. Operator can detect audible setting of hoist brakes and excessive current for hoist motors indicated on control cab console ammeters.	No effect.	3
ARECT1, ARECT2	Auxiliary Hoist Rectifier	Converts AC electrical power to DC electrical power	Fails Open	Loss of power to one hoist brake coil causing single brake to set. Motors will attempt to drive through brake. PLC will detect load imbalance between motors due to added resistance to one drive train or PLC will detect error between encoders when opposite motor takes up backlash in the drive system.	No effect.	3

Table 20. **Electrical FMEA - Auxiliary Hoist Primary Mode**

System/Subsystem: 325 Ton Bridge Cranes at the Vehicle Assembly Building High Bays 1/2/3/4 / Auxiliary Hoist
PMN: H72-1200-01, -02

Drawing No.: EB-2508
Reference Figure: None

Find No. Part No.	Part Name	Part Function	a. Failure Mode b. Cause c. FMN d. Detection Method e. Correcting Action f. Time to Effect g. Timeframe	Failure Effect On System Performance	Failure Effect On Vehicle Systems And/Or Personnel Safety	Crit Cat
			Fails Shorted	ABFU3 will blow when current overload occurs leading to loss of power to brake coils. Motors will attempt to drive through brakes. PLC will detect load imbalance or Delta Tau board will detect following error or excessive accel/decel, disabling drives. Operator can detect audible setting of hoist brakes and excessive current for hoist motors indicated on control cab console ammeters.	No effect.	3
ABR1, ABR3	Auxiliary Hoist Brake Resistor	Limits current flow in DC loop of brake circuit, setting holding current of brake solenoid	Fails Open	Brakes will initially release when commanded but one brake will set when brake forcing timer times out. Motors will attempt to drive through brake. PLC will detect load imbalance between motors due to added resistance to one drive train or PLC will detect error between encoders when opposite motor takes up backlash in the drive system.	No effect.	3

Table 20. **Electrical FMEA - Auxiliary Hoist Primary Mode**

System/Subsystem: 325 Ton Bridge Cranes at the Vehicle Assembly Building High Bays 1/2/3/4 / Auxiliary Hoist
PMN: H72-1200-01, -02
Drawing No.: EB-2508
Reference Figure: None

Find No. Part No.	Part Name	Part Function	a. Failure Mode b. Cause c. FMN d. Detection Method e. Correcting Action f. Time to Effect g. Timeframe	Failure Effect On System Performance	Failure Effect On Vehicle Systems And/Or Personnel Safety	Crit Cat
			Fails Shorted	Full current will continuously be applied to brake coil when brakes are released. Continued use will cause brake coil to overheat and be damaged by high current, resulting in brake setting. Motors will attempt to drive through brake. PLC will detect load imbalance between motors due to added resistance to one drive train or PLC will detect error between encoders when opposite motor takes up backlash in the drive system.	No effect.	3
ABR2, ABR4	Auxiliary Hoist Brake Resistor	Limits current flow in DC loop of brake circuit, setting release current of brake solenoid	Fails Open	Associated single brake will not release when commanded. Motors will attempt to drive through brake. PLC will detect load imbalance between motors due to added resistance to one drive train or PLC will detect error between encoders when East motor takes up backlash in the drive system.	No effect.	3
			Fails Shorted	Excessive current will cause ABFU3 to blow, removing power from brake circuit and causing both brakes to (remain) set. PLC will detect load imbalance or Delta Tau board will detect following error or excessive accel/decel, disabling drives. Operator can detect audible setting of hoist brakes and excessive current for hoist motors indicated on control cab ammeters.	No effect.	3

Table 20. **Electrical FMEA - Auxiliary Hoist Primary Mode**

System/Subsystem: 325 Ton Bridge Cranes at the Vehicle Assembly Building High Bays 1/2/3/4 / Auxiliary Hoist
PMN: H72-1200-01, -02
Drawing No.: EB-2508
Reference Figure: None

Find No. Part No.	Part Name	Part Function	a. Failure Mode b. Cause c. FMN d. Detection Method e. Correcting Action f. Time to Effect g. Timeframe	Failure Effect On System Performance	Failure Effect On Vehicle Systems And/Or Personnel Safety	Crit Cat
None	Auxiliary Hoist Brake Solenoid, East, West	Generates magnetic field to actuate Auxiliary Hoist brake mechanism	Fails Open	Associated single brake mechanism will (remain) set. Motors will attempt to drive through brake. PLC will detect load imbalance between motors due to added resistance to one drive train or PLC will detect error between encoders when East motor takes up backlash in the drive system.	No effect.	3
			Fails Shorted	ABR1,2 or ABR3,4 will limit current through brake circuit. Failed brake will not release. Motors will attempt to drive through brake. PLC will detect load imbalance between motors due to added resistance to one drive train or PLC will detect error between encoders when East motor takes up backlash in the drive system.	No effect.	3
None	West Motor Warning Thermistor	Provides variable resistance proportional to motor temperature	Fails Open	Motor overtemp warning on continuously.	No effect.	3
			Fails Shorted	Loss of motor overtemp warning. Motor overtemp shut down will disable drive if overtemp occurs.	No effect.	3
AWMTW	Motogard Overtemp Module	Energize PLC input when overtemp is detected in hoist motor	Fails Low or No Output	Loss of overtemp warning. Motor overtemp shut down will disable drive if overtemp occurs.	No effect.	3
			Fails High Output	Overtemp warning light will remain on continuously.	No effect.	3

Table 20. **Electrical FMEA - Auxiliary Hoist Primary Mode**

System/Subsystem: 325 Ton Bridge Cranes at the Vehicle Assembly Building High Bays 1/2/3/4 / Auxiliary Hoist
PMN: H72-1200-01, -02
Drawing No.: EB-2508
Reference Figure: None

Find No. Part No.	Part Name	Part Function	a. Failure Mode b. Cause c. FMN d. Detection Method e. Correcting Action f. Time to Effect g. Timeframe	Failure Effect On System Performance	Failure Effect On Vehicle Systems And/Or Personnel Safety	Crit Cat
None	Overtemp Warning Light	Indicates an above normal operating temperature in Auxiliary Hoist West Motor	Fails Open	Loss of overtemp warning. Motor overtemp shutdown will disable drive if overtemp occurs.	No effect.	3
			Fails Shorted	When overtemp occurs, current overload will blow FU13, Auxiliary Hoist will be disabled.	No effect.	3
None	West Motor Shut Down Thermistor	Provides variable resistance proportional to motor temperature	Fails Open	Overtemp shut down module will energized PLC input. PLC will disable Auxiliary Hoist west drive.	No effect.	3
			Fails Shorted	Loss of automatic motor overtemp shut down. Overtemp warning light will warn of overtemp condition in motor.	No effect.	3
AWMTS	Motorgard Overtemp Module	Energize PLC input when overtemp is detected in hoist motor	Fails Low or No Output	Loss of automatic motor overtemp shut down. Overtemp warning light will warn of overtemp condition in monitor.	No effect.	3
			Fails High Output	PLC input will be energized. PLC will disable hoist drive.	No effect.	3
I:2,3,B7	PLC Input	Energized by AWMTS when an overtemp condition occurs in Auxiliary Hoist west motor	Fails De-energized	Loss of automatic motor overtemp shut down. Overtemp warning light will warn of overtemp condition in motor.	No effect.	3
			Fails Energized	PLC will disable hoist drive although an overtemp condition does not exist.	No effect.	3

Table 20. **Electrical FMEA - Auxiliary Hoist Primary Mode**

System/Subsystem: 325 Ton Bridge Cranes at the Vehicle Assembly Building High Bays 1/2/3/4 / Auxiliary Hoist
PMN: H72-1200-01, -02
Drawing No.: EB-2508
Reference Figure: None

Find No. Part No.	Part Name	Part Function	a. Failure Mode b. Cause c. FMN d. Detection Method e. Correcting Action f. Time to Effect g. Timeframe	Failure Effect On System Performance	Failure Effect On Vehicle Systems And/Or Personnel Safety	Crit Cat
GO:11,09	PLC Output	Sends power to Auxiliary Hoist west motor overtemp indication light when overtemp occurs or indicator light are tested	Fails De-energized	Loss of motor overtemp shut down indication. PLC will disable hoist drive.	No effect.	3
			Fails Energized	Auxiliary hoist west motor overtemp indication light will remain illuminated continuously.	No effect.	3
None	Overtemp Shut Down Light	Indicates an above normal operating temperature in Auxiliary Hoist west motor and Hoist drive have been disabled	Fails Open	Loss of overtemp shut down indication. Hoist drive will be disabled.	No effect.	3
			Fails Shorted	When overtemp occurs, current overload will blow FU13, Hoist drive will be disabled.	No effect.	3
None	East Motor Warning Thermistor	Provides variable resistance proportional to motor temperature	Fails Open	Motor overtemp warning on continuously.	No effect.	3
			Fails Shorted	Loss of motor overtemp warning. Motor overtemp shut down will disable drive if overtemp occurs.	No effect.	3
AEMTW	Motogard Overtemp Module	Supplies power to Auxiliary Hoist East overtemp warning light when an above normal motor temperature is detected	Fails Low or No Output	Loss of overtemp warning. Motor overtemp shut down will disable drive if overtemp occurs.	No effect.	3
			Fails High Output	Overtemp warning light will remain on continuously.	No effect.	3

Table 20. **Electrical FMEA - Auxiliary Hoist Primary Mode**

System/Subsystem: 325 Ton Bridge Cranes at the Vehicle Assembly Building High Bays 1/2/3/4 / Auxiliary Hoist
PMN: H72-1200-01, -02
Drawing No.: EB-2508
Reference Figure: None

Find No. Part No.	Part Name	Part Function	a. Failure Mode b. Cause c. FMN d. Detection Method e. Correcting Action f. Time to Effect g. Timeframe	Failure Effect On System Performance	Failure Effect On Vehicle Systems And/Or Personnel Safety	Crit Cat
None	Overtemp Warning Light	Indicates an above normal operating temperature in Auxiliary Hoist East motor	Fails Open	Loss of overtemp warning. Motor overtemp shut down will disable drive if overtemp occurs.	No effect.	3
			Fails Shorted	When overtemp occurs, current overload will blow FU13. Auxiliary hoist drive will be disabled.	No effect.	3
None	East Motor Shut Down Thermistor	Provides variable resistance proportional to motor temperature	Fails Open	Overtemp shut down module will energized PLC input. PLC will disable hoist drive.	No effect.	3
			Fails Shorted	Loss of automatic motor overtemp shut down. Overtemp warning light will warn of overtemp condition in motor.	No effect.	3
AEMTS	Motogard Over Temp Module	Energize PLC input when overtemp is detected in Auxiliary Hoist East motor	Fails Low or No Output	Loss of automatic motor overtemp shut down. Overtemp warning light will warn of overtemp condition in motor.	No effect.	3
			Fails High Output	PLC Input will be energized. PLC will disable hoist drive.	No effect.	3
I:2,3,B8	PLC Input	Energized by AEMTS when on overtemp condition occurs in Auxiliary Hoist East motor	Fails De-energized	Loss of automatic motor overtemp shut down. Overtemp warning light will warn of overtemp condition in motor.	No effect.	3
			Fails Energized	PLC will disable hoist drive although an overtemp condition does not exist.	No effect.	3

Table 20. **Electrical FMEA - Auxiliary Hoist Primary Mode**

System/Subsystem: 325 Ton Bridge Cranes at the Vehicle Assembly Building High Bays 1/2/3/4 / Auxiliary Hoist
PMN: H72-1200-01, -02
Drawing No.: EB-2508
Reference Figure: None

Find No. Part No.	Part Name	Part Function	a. Failure Mode b. Cause c. FMN d. Detection Method e. Correcting Action f. Time to Effect g. Timeframe	Failure Effect On System Performance	Failure Effect On Vehicle Systems And/Or Personnel Safety	Crit Cat
GO:11,10	PLC Output	Sends power to Auxiliary Hoist East motor overtemp indication light when overtemp occurs or indicator lights are tested	Fails De-energized	Loss of motor overtemp shut down indication. PLC will disable hoist drive.	No effect.	3
			Fails Energized	Auxiliary Hoist west motor overtemp indication light will remain illuminated continuously.	No effect.	3
None	Overtemp Shut Down Light	Indicates an above normal operating temperature in Auxiliary Hoist East motor and hoist drive have disabled	Fails Open	Loss of overtemp shut down indication. Hoist drive will be disabled.	No effect.	3
			Fails Shorted	When overtemp occurs, current overload will blow FU13. Hoist drive will be disabled.	No effect.	3
AWSRA	Scaling Resistor Assembly	Scale voltage from fault resistors to conform to AWFSA circuitry	Fails Open	Voltage imbalance will be detected by AWFSA. AWFSA will disable AWMCM and de-energize relay AWRDY.	No effect.	3
			Fails Shorted	Voltage imbalance will be detected by AWFSA. AWFSA will disable AWMCM and de-energize relay AWRDY.	No effect.	3
AWFSA	Auxiliary Hoist West Fault Sense Assembly	Monitor Auxiliary Hoist west motor control module current balance, disabling AWMCM if imbalance occurs				

Table 20. **Electrical FMEA - Auxiliary Hoist Primary Mode**

System/Subsystem: 325 Ton Bridge Cranes at the Vehicle Assembly Building High Bays 1/2/3/4 / Auxiliary Hoist
PMN: H72-1200-01, -02
Drawing No.: EB-2508
Reference Figure: None

Find No. Part No.	Part Name	Part Function	a. Failure Mode b. Cause c. FMN d. Detection Method e. Correcting Action f. Time to Effect g. Timeframe	Failure Effect On System Performance	Failure Effect On Vehicle Systems And/Or Personnel Safety	Crit Cat
	J1-6	Provide ground for relay AWRDY	Fails High	Relay AWRDY will not energize. Hoist drive will be disabled. Brakes will set.	No effect.	3
			Fails Low	Relay AWRDY will remain energized. Relays AWFSA and AWDE will disable AWMCM. Brakes will set.	No effect.	3
	J2-12	Provide enable signal for AWMCM	Fails High	Relay AWDE and PLC output will disable AEMCM. Brakes will set.	No effect.	3
			Fails Low	AWMCM will not be enabled. Drive will not operate. Torque will not be proved. Brakes will remain set.	No effect.	3
	J2-5	Provide power for sensing contacts of relay AWDC	Fails Low or No Output	AWFSA will sense that AWDC contact did not close even though it did. AWFSA will not enable AWMCM or provide ground for relay AWRDY. Hoist will not operate.	No effect.	3
	J2-6	Input from sensing contacts of relay AWDC	Fails Low	AWFSA will sense that AWDC contact did not close even though it did. AWFSA will not enable AWMCM or provide ground for relay AWRDY. Hoist will not operate.	No effect.	3
			Fails High	Relay AWDE and PLC output will disable AWMCM. Brakes will set.	No effect.	3
AWRDY	Relay	Energizes when AWMCM is ready and AWFSA J1-6 goes low	Fails De-energized	Relay AWDE, AWDC and PLC input will not be energized to complete DC motor armature loop. Hoist drive will not operate.	No effect.	3

Table 20. **Electrical FMEA - Auxiliary Hoist Primary Mode**

System/Subsystem: 325 Ton Bridge Cranes at the Vehicle Assembly Building High Bays 1/2/3/4 / Auxiliary Hoist
PMN: H72-1200-01, -02
Drawing No.: EB-2508
Reference Figure: None

Find No. Part No.	Part Name	Part Function	a. Failure Mode b. Cause c. FMN d. Detection Method e. Correcting Action f. Time to Effect g. Timeframe	Failure Effect On System Performance	Failure Effect On Vehicle Systems And/Or Personnel Safety	Crit Cat
			Fails Energized	AWMCM J1-20 goes high when fault occurs, de-energizing relay AWFLT. AWFLT will de-energize relay AWDE, AWDC and PLC input. Hoist drive will be disabled and brakes will set.	No effect.	3
	Contact	Closes to energizes relay AWDE	Fails Open	Auxiliary hoist west drive enable relay will not energize. AWMCM will not be enabled. Hoist drive will not operate.	No effect.	3
			Fails Closed	No effect. Auxiliary hoist west drive enable relay will not energize until commanded by PLC and other AWRDY contact will de-energize relay AWDC, disabling AWMCM. PLC will detect load imbalance or torque proving failure, disable drives and set brakes.	No effect.	3
O:0,5,01	PLC Output	Analog input to AWMCM to set current for torque proving	Fails High	Motor control module will not use Aux. current reference until input J2-8 is energized. High current command will cause motor to drive through brake causing motion error. Delta Tau will detect uncommanded motion and signal PLC. PLC will disable drives.	No effect.	3
			Fails Low or No Output	Current command will not be sufficient to prove torque. PLC will not enable hoist motion due to torque proving failure.	No effect.	3

Table 20. **Electrical FMEA - Auxiliary Hoist Primary Mode**

System/Subsystem: 325 Ton Bridge Cranes at the Vehicle Assembly Building High Bays 1/2/3/4 / Auxiliary Hoist
PMN: H72-1200-01, -02
Drawing No.: EB-2508
Reference Figure: None

Find No. Part No.	Part Name	Part Function	a. Failure Mode b. Cause c. FMN d. Detection Method e. Correcting Action f. Time to Effect g. Timeframe	Failure Effect On System Performance	Failure Effect On Vehicle Systems And/Or Personnel Safety	Crit Cat
None	Resistor 20K Ohms	Prevent PLC output from “floating” when an output is not being provided by the PLC	Fails Open	No effect. Motor control module will not use Aux. current reference until PLC energizes input J2-8.	No effect.	3
			Fails Shorted	Motor control module will receive an Aux. current command of zero. Torque will not be proved. PLC will not allow hoist operation.	No effect.	3
AWFLT	Auxiliary Hoist West Fault Relay	Energizes when AWMCM J1-20 goes low, signaling AWMCM has a fault	Fails De-energized	Relay AWFLT will indicate a fault exists in the AWMCM when a fault does not exist. Relays AWDE, AWDC and PLC input will be de-energized. Hoist drive will be disabled and brakes will set.	No effect.	3
			Fails Energized	AWMCM J2-15 will go low when fault occurs, de-energizing relays AWRDY and AWFRDY. AWRDY will de-energize relay AWDE, AWDC and PLC input. Hoist drive will be disabled and brake will set.	No effect.	3
	Contact	Closes to energize relay AWDE	Fails Open	Auxiliary hoist west drive enable relay will not energize. AWMCM will not be enabled. Hoist drive will not operate.	No effect.	3
			Fails Closed	AWMCM J2-15 will go low when fault occurs, de-energizing relay AWRDY and AWFRDY. AWRDY will de-energize relay AWDE, AWDC and PLC input. Hoist drive will be disabled and brake will set.	No effect.	3

Table 20. **Electrical FMEA - Auxiliary Hoist Primary Mode**

System/Subsystem: 325 Ton Bridge Cranes at the Vehicle Assembly Building High Bays 1/2/3/4 / Auxiliary Hoist
PMN: H72-1200-01, -02

Drawing No.: EB-2508
Reference Figure: None

Find No. Part No.	Part Name	Part Function	a. Failure Mode b. Cause c. FMN d. Detection Method e. Correcting Action f. Time to Effect g. Timeframe	Failure Effect On System Performance	Failure Effect On Vehicle Systems And/Or Personnel Safety	Crit Cat
O:1,5,B1	PLC Output	Energizes input J2-6, RUN, of AWMCM	Fails De-energized	AWMCM circuitry will not be enabled. Hoist drive will not operate.	No effect.	3
			Fails Energized	Delta Tau motion controller will command AWMCM to maintain zero speed. Brakes will set.	No effect.	3
O:1,5,B2	PLC Output	Energizes input J2-8, AUX. torque enable, of AWMCM for torque proving	Fails De-energized	Motor control module will not send current through armature of motor to prove torque. PLC will disable hoist for torque proving failure.	No effect.	3
			Fails Energized	Motor control module will continue to use Aux. current reference to run motor. PLC will detect load imbalance and disable hoist and set brakes. Delta Tau motion controller will detect following error and signal PLC to disable drives and set brakes.	No effect.	3
I:1,4,A2	PLC Input	De-energizes when west SCR overtemp sensor contacts open	Fails De-energized	PLC will detect SCR overtemp even though an overtemp condition does not exist. PLC will disable drives and set brakes.	No effect.	3
			Fails Energized	AWMCM input J2-11 will signal that SCR overtemp has occurred. AWMCM will be disabled and ready signal will be removed, de-energizing relays AWRDY and AWFRDY which will de-energize relay AWDE and AWDC. PLC will detect drive not enabled and set brakes.	No effect.	3

Table 20. **Electrical FMEA - Auxiliary Hoist Primary Mode**

System/Subsystem: 325 Ton Bridge Cranes at the Vehicle Assembly Building High Bays 1/2/3/4 / Auxiliary Hoist
PMN: H72-1200-01, -02
Drawing No.: EB-2508
Reference Figure: None

Find No. Part No.	Part Name	Part Function	a. Failure Mode b. Cause c. FMN d. Detection Method e. Correcting Action f. Time to Effect g. Timeframe	Failure Effect On System Performance	Failure Effect On Vehicle Systems And/Or Personnel Safety	Crit Cat
WSCR OT	West SCR Over Temperature Sensor	Contact opens when temperature of west SCRs exceeds a set value	Fails Open	PLC will detect SCR overtemp even though an overtemp condition does not exist. PLC will disable drives and set brakes.	No effect.	3
			Fails Closed	Loss of SCR overheat protection. Loss of SCR will cause phase imbalance at motor control module inputs which will be detected by AWFSA. AWFSA will disable drive. PLC will detect disabled drive and set brakes.	No effect.	3
AWMCM (continued)	Auxiliary Hoist West Motor Control Module	Provides primary armature and field control of Auxiliary Hoist West Motor				
	J1-8,9	DC current reference input from Delta Tau motion controller	Fails Low	AWMCM will provide too low of a current to achieve or maintain speed commanded. Delta Tau motion controller will detect following error. PLC will shut down hoist drive and set brakes. PLC will detect load imbalance and disable drives and set brakes.	No effect.	3
			Fails High	AWMCM will provide too high of a current to achieve or maintain speed commanded. Delta Tau motion controller will detect following error. PLC will shut down hoist drive and set brakes. PLC will detect load imbalance and disable drives and set brakes.	No effect.	3

Table 20. **Electrical FMEA - Auxiliary Hoist Primary Mode**

System/Subsystem: 325 Ton Bridge Cranes at the Vehicle Assembly Building High Bays 1/2/3/4 / Auxiliary Hoist
PMN: H72-1200-01, -02
Drawing No.: EB-2508
Reference Figure: None

Find No. Part No.	Part Name	Part Function	a. Failure Mode b. Cause c. FMN d. Detection Method e. Correcting Action f. Time to Effect g. Timeframe	Failure Effect On System Performance	Failure Effect On Vehicle Systems And/Or Personnel Safety	Crit Cat
	J1-12	Auxiliary current reference input from PLC	Fails High	Motor control module will not use Aux. current reference until input J2-8 is energized. High current command will cause motor to drive through brake causing motion error. Delta Tau will detect uncommanded motion and signal PLC. PLC will disable drives.	No effect.	3
			Fails Low or No Output	Current command will not be sufficient to prove torque. PLC will not enable hoist motion due to torque proving failure.	No effect.	3
	J1-14	+15 Volts DC output for Auxiliary Hoist west fault sense assembly	Fails Low	Voltage offset will cause imbalance in AWFSA comparators. AWFSA will indicate a fault has occurred and disable AWMCM. AWMCM will de-energize relays AWFLT and AWRDY causing PLC to disable drive and set brakes.	No effect.	3
			Fails high	Voltage offset will cause imbalance in AWFSA comparators. AWFSA will indicate a fault has occurred and disable AWMCM. AWMCM will de-energize relays AWFLT and AWRDY causing PLC to disable drive and set brakes.	No effect.	3
	J1-17	-15 Volts DC output for Auxiliary Hoist West Fault Sense Assembly	Fails Low	Voltage offset will cause imbalance in AWFSA comparators. AWFSA will indicate a fault has occurred and disable AWMCM. AWMCM will de-energize relays AWFLT and AWRDY causing PLC to disable drive and set brakes.	No effect.	3

Table 20. **Electrical FMEA - Auxiliary Hoist Primary Mode**

System/Subsystem: 325 Ton Bridge Cranes at the Vehicle Assembly Building High Bays 1/2/3/4 / Auxiliary Hoist
PMN: H72-1200-01, -02
Drawing No.: EB-2508
Reference Figure: None

Find No. Part No.	Part Name	Part Function	a. Failure Mode b. Cause c. FMN d. Detection Method e. Correcting Action f. Time to Effect g. Timeframe	Failure Effect On System Performance	Failure Effect On Vehicle Systems And/Or Personnel Safety	Crit Cat
			Fails High	Voltage offset will cause imbalance in AWFSA comparators. AWFSA will indicate a fault has occurred and disable AWMCM. AWMCM will de-energize relays AWFLT and AWRDY causing PLC to disable drive and set brakes.	No effect.	3
	J1-20	Motor Control Fault Output	Fails Low	AWMCM J2-15 will go low when fault occurs, de-energizing relay AWRDY. AWRDY will de-energize relay AWDE, AEDC and PLC input. Hoist will be disabled and brake will set.	No effect.	3
			Fails High	Relay AWFLT will indicate a fault exists in the AWMCM when a fault does not exist. Relays AWDE, AWDC and PLC input will be de-energized. Hoist drive will be disabled and brakes will set.	No effect.	3
	J2-4	Drive enable input from fault sense assembly and relay AWDE	Fails Low	AWMCM will not be enabled. Hoist drive will not run.	No effect.	3
			Fails high	Relay AWDE will de-energize relay AWDC, opening DC motor armature loop. PLC input will cause brakes to be set.	No effect.	3
	J2-6	Drive run input from PLC	Fails Low	AWMCM circuitry will not be enabled. Hoist drive will not operate.	No effect.	3

Table 20. **Electrical FMEA - Auxiliary Hoist Primary Mode**

System/Subsystem: 325 Ton Bridge Cranes at the Vehicle Assembly Building High Bays 1/2/3/4 / Auxiliary Hoist
PMN: H72-1200-01, -02
Drawing No.: EB-2508
Reference Figure: None

Find No. Part No.	Part Name	Part Function	a. Failure Mode b. Cause c. FMN d. Detection Method e. Correcting Action f. Time to Effect g. Timeframe	Failure Effect On System Performance	Failure Effect On Vehicle Systems And/Or Personnel Safety	Crit Cat
			Fails High	Delta Tau motion controller will command AWMCM to maintain zero current. Brakes will set.	No effect.	3
	J2-8	Auxiliary torque enable input from PLC	Fails Low	Motor control module will not send current through armature of motor to prove torque. PLC will disable hoist for torque proving failure.	No effect.	3
			Fails High	Motor control module will continue to use Aux. current reference to run motor. PLC will detect load imbalance and disable hoist and set brakes. Delta Tau motion controller will detect following error and signal PLC to disable drives and set brakes.	No effect.	3
	J2-11	External Fault Input from WSCR OT sensor	Fails Low	PLC will detect SCR overtemp even though an overtemp condition does not exist. PLC will disable drives and set brakes.	No effect.	3
			Fails High	Loss of SCR overheat protection. Loss of SCR will cause phase imbalance at motor control module inputs which will be detected by AWFSA. AWFSA will disable drive. PLC will detect disabled drive and set brakes.	No effect.	3
	J2-15	Ready relay output to relay AWRDY	Fails Low	AWMCM will not energize relay AWRDY or signal Delta Tau motion controller that AWMCM is ready. Hoist drive will be disabled. PLC will set brake.	No effect.	3

Table 20. **Electrical FMEA - Auxiliary Hoist Primary Mode**

System/Subsystem: 325 Ton Bridge Cranes at the Vehicle Assembly Building High Bays 1/2/3/4 / Auxiliary Hoist
PMN: H72-1200-01, -02
Drawing No.: EB-2508
Reference Figure: None

Find No. Part No.	Part Name	Part Function	a. Failure Mode b. Cause c. FMN d. Detection Method e. Correcting Action f. Time to Effect g. Timeframe	Failure Effect On System Performance	Failure Effect On Vehicle Systems And/Or Personnel Safety	Crit Cat
			Fails High	AWMCM J1-20 will de-energize relay AWFLT when fault occurs, de-energizing relays AWDE, AEDC and PLC input. Drive will be disabled and PLC will set brake.	No effect.	3
	J2-18	+25 volt DC output to Fault Sense Assembly, relay AWFLT, and WSCR OT switch	Fails Low	Loss of +25 VDC to AWFSA and relay. AWMCM input J2-6 will not be energized to enable AWMCM circuitry. Hoist drive will not operate. AWMCM will fault internally on loss of +25 VDC and de-energize relay AWRDY and AWFLT, causing PLC to disable drive and set brake.	No effect.	3
			Fails High	Possible damage to fault sense assembly or cause motor control module to malfunction. PLC will detect fault, disable drive, and set brakes.	No effect.	3
AESRA	Scaling Resistor Assembly	Scale voltage from fault resistors to conform to AEFSA circuitry	Fails Open	Voltage imbalance will be detected by AEFSA. AEFSA will disable AEMCM and de-energize relay AERDY.	No effect.	3
			Fails Shorted	Voltage imbalance will be detected by AEFSA. AEFSA will disable AEMCM and de-energize relay AERDY.	No effect.	3
AEFSA	Auxiliary Hoist East Fault Sense Assembly	Monitor Auxiliary Hoist East motor control module current balance, disabling AEMCM if imbalance occurs				

Table 20. **Electrical FMEA - Auxiliary Hoist Primary Mode**

System/Subsystem: 325 Ton Bridge Cranes at the Vehicle Assembly Building High Bays 1/2/3/4 / Auxiliary Hoist
PMN: H72-1200-01, -02
Drawing No.: EB-2508
Reference Figure: None

Find No. Part No.	Part Name	Part Function	a. Failure Mode b. Cause c. FMN d. Detection Method e. Correcting Action f. Time to Effect g. Timeframe	Failure Effect On System Performance	Failure Effect On Vehicle Systems And/Or Personnel Safety	Crit Cat
	J1-6	Provide ground for relays AERDY and AEFRDY	Fails High	Relay AERDY will not energize. Hoist drive will be disabled. Brakes will set.	No effect.	3
			Fails Low	Relay AERDY will remain energized. Relays AEFSA and AEDE will disable AEMCM. Brakes will set.	No effect.	3
	J2-12	Provide enable signal for AEMCM	Fails High	Relay AEDE and PLC output will disable AEMCM. Brakes will set.	No effect.	3
			Fails Low	AEMCM will not be enabled. Drive will not operate. Torque will not be proved. Brakes will remain set.	No effect.	3
	J2-5	Provide power for sensing contacts of relay AEDC	Fails Low or No Output	AEFSA will sense that AEDC contact did not close even though it did. AEFSA will not enable AEMCM or provide ground for relays AERDY and AEFRDY. Hoist will not operate.	No effect.	3
			Fails High	Relay AEDE and PLC output will disable AEMCM. Brakes will set.	No effect.	3
AERDY	Relay	Energizes when AEMCM is ready and AEFSA J1-6 goes low	Fails De-energized	Relay AEDE, AEDC and PLC input will not be energized to complete DC motor armature loop. Hoist drive will not operate. PLC will detect load imbalance or torque proving failure, disable drives and set brakes.	No effect.	3

Table 20. **Electrical FMEA - Auxiliary Hoist Primary Mode**

System/Subsystem: 325 Ton Bridge Cranes at the Vehicle Assembly Building High Bays 1/2/3/4 / Auxiliary Hoist
PMN: H72-1200-01, -02
Drawing No.: EB-2508
Reference Figure: None

Find No. Part No.	Part Name	Part Function	a. Failure Mode b. Cause c. FMN d. Detection Method e. Correcting Action f. Time to Effect g. Timeframe	Failure Effect On System Performance	Failure Effect On Vehicle Systems And/Or Personnel Safety	Crit Cat
			Fails Energized	AEMCM J1-20 goes high when fault occurs, de-energizing relay AEFLT. AEFLT will de-energize relay AEDE, AEDC and PLC input. Hoist drive will be disabled and brakes will set.	No effect.	3
	Contact	Closes to energize relay AEDE	Fails Open	Auxiliary Hoist East drive enable relay will not energize. AEMCM will not be enabled. Hoist drive will not operate.	No effect.	3
			Fails Closed	No effect. Auxiliary Hoist East drive enable relay will not energize until commanded by PLC and other AERDY contact will de-energize relay AEDC, disabling AEMCM. PLC will detect load imbalance or torque proving failure, disable drives and set brakes.	No effect.	3
O:0,5,02	PLC Output	Analog input to AEMCM to set current for torque proving	Fails High	Motor control module will not use Aux. current reference until input J2-8 is energized. High current command will cause motor to drive through brake causing motion error. Delta Tau will detect uncommanded motion and signal PLC. PLC will disable drives.	No effect.	3
			Fails Low or No Output	Current command will not be sufficient to prove torque. PLC will not enable hoist motion due to torque proving failure.	No effect.	3

Table 20. **Electrical FMEA - Auxiliary Hoist Primary Mode**

System/Subsystem: 325 Ton Bridge Cranes at the Vehicle Assembly Building High Bays 1/2/3/4 / Auxiliary Hoist
PMN: H72-1200-01, -02
Drawing No.: EB-2508
Reference Figure: None

Find No. Part No.	Part Name	Part Function	a. Failure Mode b. Cause c. FMN d. Detection Method e. Correcting Action f. Time to Effect g. Timeframe	Failure Effect On System Performance	Failure Effect On Vehicle Systems And/Or Personnel Safety	Crit Cat
None	Resistor 20K Ohms	Prevent PLC output from “floating” when an output is not being provided by the PLC	Fails Open	No effect. Motor control module will not use Aux. current reference until PLC energizes input J2-8.	No effect.	3
			Fails Shorted	Motor control module will receive an Aux. current command of zero. Torque will not be proved. PLC will not allow hoist operation.	No effect.	3
AEFLT	Auxiliary Hoist East Fault relay	Energizes when AEMCM J1-20 goes low, signaling AEMCM has a fault	Fails De-energized	Relay AEFLT will indicate a fault exists in the AEMCM when a fault does not exist. Relays AEDE, AEDC and PLC input will be de-energized. Hoist drive will be disabled and brakes will set.	No effect.	3
			Fails Energized	AEMCM J2-15 will go low when fault occurs, de-energizing relay AERDY. AERDY will de-energize relay AEDE, AEDC and PLC input. Hoist drive will be disabled and brake will set.	No effect.	3
	Contact	Closes to energize relay AEDE	Fails Open	Auxiliary Hoist East drive enable will not energize. AEMCM will not be enabled. Hoist drive will not operate.	No effect.	3
			Fails Closed	AEMCM J2-15 will go low when fault occurs, de-energizing relay AERDY and AEFRDY. AERDY will de-energize relay AEDE, AEDC and PLC input. Hoist drive will be disabled and brake will set.	No effect.	3

Table 20. **Electrical FMEA - Auxiliary Hoist Primary Mode**

System/Subsystem: 325 Ton Bridge Cranes at the Vehicle Assembly Building High Bays 1/2/3/4 / Auxiliary Hoist
PMN: H72-1200-01, -02

Drawing No.: EB-2508
Reference Figure: None

Find No. Part No.	Part Name	Part Function	a. Failure Mode b. Cause c. FMN d. Detection Method e. Correcting Action f. Time to Effect g. Timeframe	Failure Effect On System Performance	Failure Effect On Vehicle Systems And/Or Personnel Safety	Crit Cat
O:1,5,B3	PLC Output	Energizes input J2-6, RUN, of AEMCM	Fails De-energized	AEMCM circuitry will not be enabled. Hoist drive will not operate.	No effect.	3
			Fails Energized	Delta Tau motion controller will command AEMCM to maintain zero speed. Brakes will set.	No effect.	3
O:1,5,B4	PLC Output	Energizes input J2-8, Aux. torque enable, of AEMCM for torque proving	Fails De-energized	Motor control module will not send current through armature of motor to prove torque. PLC will disable hoist for torque proving failure.	No effect.	3
			Fails Energized	Motor control module will continue to use Aux. current reference to run motor. PLC will detect load imbalance and disable hoist and set brakes. Delta Tau motion controller will detect following error and signal PLC to disable drives and set brakes.	No effect.	3
I:1,4,C2	PLC Input	De-energizes when East SCR overtemp sensor contacts open	Fails De-energized	PLC will detect SCR overtemp even though an overtemp condition does not exist. PLC will disable drives and set brakes.	No effect.	3
			Fails Energized	AEMCM input J2-11 will signal that SCR overtemp has occurred. AEMCM will be disabled and ready signal will be removed, de-energizing relays AERDY and AEFRDY which will de-energize relay AEDE and AEDC. PLC will detect drive not enabled and set brakes.	No effect.	3

Table 20. **Electrical FMEA - Auxiliary Hoist Primary Mode**

System/Subsystem: 325 Ton Bridge Cranes at the Vehicle Assembly Building High Bays 1/2/3/4 / Auxiliary Hoist
PMN: H72-1200-01, -02
Drawing No.: EB-2508
Reference Figure: None

Find No. Part No.	Part Name	Part Function	a. Failure Mode b. Cause c. FMN d. Detection Method e. Correcting Action f. Time to Effect g. Timeframe	Failure Effect On System Performance	Failure Effect On Vehicle Systems And/Or Personnel Safety	Crit Cat
ESCR OT	East SCR Over Temperature Sensor	Contact opens when temperature of East SCRs exceeds a set value	Fails Open	PLC will detect SCR overtemp even though an overtemp condition does not exist. PLC will disable drives and set brakes.	No effect.	3
			Fails Closed	Loss of SCR overheat protection. Loss of SCR will cause phase imbalance at motor control module inputs which will be detected by AEFSA. AEFSA will disable drive. PLC will detect disabled drive and set brakes.	No effect.	3
AEMC (continued)	Auxiliary Hoist East Motor Control Module	Provides primary armature and field control of Auxiliary Hoist East motor				
	J1-8,9	DC Current reference input from Delta Tau Motion Controller	Fails Low	AEMCM will provide too low of a current to achieve or maintain speed commanded. Delta Tau Motion Controller will detect following error, PLC will shut down hoist drive and set brakes. PLC will detect load imbalance and disable drives and set brakes.	No effect.	3
			Fails High	AEMCM will provide too high of a current to achieve or maintain speed commanded. Delta Tau Motion Controller will detect following error, PLC will shut down hoist drive and set brakes. PLC will detect load imbalance and disable drives and set brakes.	No effect.	3

Table 20. **Electrical FMEA - Auxiliary Hoist Primary Mode**

System/Subsystem: 325 Ton Bridge Cranes at the Vehicle Assembly Building High Bays 1/2/3/4 / Auxiliary Hoist
PMN: H72-1200-01, -02
Drawing No.: EB-2508
Reference Figure: None

Find No. Part No.	Part Name	Part Function	a. Failure Mode b. Cause c. FMN d. Detection Method e. Correcting Action f. Time to Effect g. Timeframe	Failure Effect On System Performance	Failure Effect On Vehicle Systems And/Or Personnel Safety	Crit Cat
	J1-12	Auxiliary Current Reference input from PLC	Fails High	Motor control module will not use Aux. current reference until input J2-8 is energized. High current command will cause motor to drive through brake causing motion error. Delta Tau will detect uncommanded motion and signal PLC. PLC will disable drives.	No effect.	3
			Fails Low or No Output	Current command will not be sufficient to prove torque. PLC will not enable hoist motion due to torque proving failure.	No effect.	3
	J1-14	+15 Volts DC output for Auxiliary Hoist East Fault Sense Assembly	Fails Low	Voltage offset will cause imbalance in AEFSA comparators. AEFSA will indicate a fault has occurred and disable AEMCM. AEMCM will de-energize relays AEFLT and AERDY causing PLC to disable drive and set brakes.	No effect.	3
			Fails High	Voltage offset will cause imbalance in AEFSA comparators. AEFSA will indicate a fault has occurred and disable AEMCM. AEMCM will de-energize relays AEFLT and AERDY causing PLC to disable drive and set brakes.	No effect.	3
	J1-17	-15 Volts DC output for Auxiliary Hoist East Fault Sense Assembly	Fails Low	Voltage offset will cause imbalance in AEFSA comparators. AEFSA will indicate a fault has occurred and disable AEMCM. AEMCM will de-energize relays AEFLT and AERDY causing PLC to disable drive and set brakes.	No effect.	3

Table 20. **Electrical FMEA - Auxiliary Hoist Primary Mode**

System/Subsystem: 325 Ton Bridge Cranes at the Vehicle Assembly Building High Bays 1/2/3/4 / Auxiliary Hoist
PMN: H72-1200-01, -02
Drawing No.: EB-2508
Reference Figure: None

Find No. Part No.	Part Name	Part Function	a. Failure Mode b. Cause c. FMN d. Detection Method e. Correcting Action f. Time to Effect g. Timeframe	Failure Effect On System Performance	Failure Effect On Vehicle Systems And/Or Personnel Safety	Crit Cat
			Fails High	Voltage offset will cause imbalance in AEFSA comparators. AEFSA will indicate a fault has occurred and disable AEMCM. AEMCM will de-energize relays AEFLT and AERDY causing PLC to disable drive and set brakes.	No effect.	3
	J1-20	Motor Control Fault Output	Fails Low	AEMCM J2-15 will go low when fault occurs, de-energizing relay AERDY. AERDY will de-energize relay AEDE, AEDC and PLC input. Hoist drive will be disabled and brake will set.	No effect.	3
			Fails High	Relay AEFLT will indicate a fault exists in the AEMCM when a fault does not exist. Relays AEDE, AEDC and PLC input will be de-energized. Hoist drive will be disabled and brakes will set.	No effect.	3
	J2-4	Drive enable input from Fault Sense Assembly and relay AEDE	Fails Low	AEMCM will not be enabled. Hoist drive will not run.	No effect.	3
			Fails High	Relay AEDE will de-energize relay AEDC, opening DC motor armature loop. PLC input will cause brakes to be set.	No effect.	3
	J2-6	Drive run input from PLC	Fails Low	AEMCM circuitry will not be enabled. Hoist drive will not operate.	No effect.	3

Table 20. **Electrical FMEA - Auxiliary Hoist Primary Mode**

System/Subsystem: 325 Ton Bridge Cranes at the Vehicle Assembly Building High Bays 1/2/3/4 / Auxiliary Hoist
PMN: H72-1200-01, -02

Drawing No.: EB-2508
Reference Figure: None

Find No. Part No.	Part Name	Part Function	a. Failure Mode b. Cause c. FMN d. Detection Method e. Correcting Action f. Time to Effect g. Timeframe	Failure Effect On System Performance	Failure Effect On Vehicle Systems And/Or Personnel Safety	Crit Cat
			Fails High	Delta Tau motion controller will command AEMCM to maintain zero current. Brakes will set.	No effect.	3
	J2-8	Auxiliary torque enable input from PLC	Fails Low	Motor control module will not send current through armature of motor to prove torque. PLC will disable hoist for torque proving failure.	No effect.	3
			Fails Energized	Motor control module will continue to use Aux. current reference to run motor. PLC will detect load imbalance and disable hoist and set brakes. Delta Tau motion controller will detect following error and signal PLC to disable drives and set brakes.	No effect.	3
	J2-11	External Fault Input from ESCR OT sensor	Fails Low	PLC will detect SCR overtemp even though an overtemp condition does not exist. PLC will disable drives and set brakes.	No effect.	3
			Fails Closed	Loss of SCR overheat protection. Loss of SCR will cause phase imbalance at motor control module inputs which will be detected by AEFSA. AEFSA will disable drive. PLC will detect disabled drive and set brakes.	No effect.	3
	J2-15	Ready relay output to relay AERDY	Fails Low	AEMCM will not energize relay AERDY or signal Delta Tau motion controller that AEMCM is ready. Hoist drive will be disabled. PLC will set brakes.	No effect.	3

Table 20. **Electrical FMEA - Auxiliary Hoist Primary Mode**

System/Subsystem: 325 Ton Bridge Cranes at the Vehicle Assembly Building High Bays 1/2/3/4 / Auxiliary Hoist
PMN: H72-1200-01, -02

Drawing No.: EB-2508
Reference Figure: None

Find No. Part No.	Part Name	Part Function	a. Failure Mode b. Cause c. FMN d. Detection Method e. Correcting Action f. Time to Effect g. Timeframe	Failure Effect On System Performance	Failure Effect On Vehicle Systems And/Or Personnel Safety	Crit Cat
			Fails High	AEMCM J1-20 will de-energize relay AEFLT when fault occurs, de-energizing relay AEDE, AEDC and PLC input. Drive will be disabled and PLC will set brakes.	No effect.	3
	J2-18	+25 volts DC output to Fault Sense Assembly, relay AEFLT and ESCR OT switch	Fails Low	Loss of +25 VDC to AEFSA and relay. AEMCM input J2-6 will not be energized to enable AEMCM circuitry. Hoist drive will not operate. AEMCM will fault internally on loss of +25 VDC and de-energize relays AERDY and AEFLT, causing PLC to disable drive and set brake.	No effect.	3
			Fails High	Possible damage to fault sense assembly or cause motor control module to malfunction. PLC will detect fault, disable drive, and set brakes.	No effect.	3
None	Auxiliary Hoist West Encoder	Send digital feedback to Delta Tau motion control board for servoing	Fails No Output	Delta Tau motion controller will detect loss of feedback and PLC will detect encoder imbalance. Hoist drive will be disabled, brakes will (remain) set.	No effect.	3
			Fails Single Line No Output	Delta Tau motion controller will detect feedback error and PLC will detect encoder imbalance. Hoist drive will be disabled. Brakes will (remain) set.	No effect.	3

Table 20. **Electrical FMEA - Auxiliary Hoist Primary Mode**

System/Subsystem: 325 Ton Bridge Cranes at the Vehicle Assembly Building High Bays 1/2/3/4 / Auxiliary Hoist
PMN: H72-1200-01, -02
Drawing No.: EB-2508
Reference Figure: None

Find No. Part No.	Part Name	Part Function	a. Failure Mode b. Cause c. FMN d. Detection Method e. Correcting Action f. Time to Effect g. Timeframe	Failure Effect On System Performance	Failure Effect On Vehicle Systems And/Or Personnel Safety	Crit Cat
None	Auxiliary Hoist East Encoder	Send digital feedback to Delta Tau Motion Control board for servoing	Fails No Output	Delta Tau motion controller will detect loss of feedback and PLC will detect encoder imbalance. Hoist drive will be disabled, brakes will (remain) set.	No effect.	3
			Fails Single Line No Output	Delta Tau motion controller will detect feedback error and PLC will detect encoder imbalance. Hoist drive will be disabled. Brakes will (remain) set.	No effect.	3
None	Auxiliary Hoist Load Cell	Alters excitation signal proportionally to load applied to load cell	Fails Low or No Output	Load signal will be lost or be lower than expected. Output from control unit to PLC input will be zero volts or lower than expected. PLC will detect excessive difference between #1 and #2 weighing systems. PLC will disable hoist and set brakes.	No effect.	3
			Fails High Output	Load signal will be higher than expected. Output from control unit to PLC input will be higher than expected. PLC will detect excessive difference between #1 and #2 weighing systems. PLC will disable hoist and set brakes.	No effect.	3
None	Main / Auxiliary Weighing system Control Unit					

Table 20. **Electrical FMEA - Auxiliary Hoist Primary Mode**

System/Subsystem: 325 Ton Bridge Cranes at the Vehicle Assembly Building High Bays 1/2/3/4 / Auxiliary Hoist
PMN: H72-1200-01, -02
Drawing No.: EB-2508
Reference Figure: None

Find No. Part No.	Part Name	Part Function	a. Failure Mode b. Cause c. FMN d. Detection Method e. Correcting Action f. Time to Effect g. Timeframe	Failure Effect On System Performance	Failure Effect On Vehicle Systems And/Or Personnel Safety	Crit Cat
	1,2	Output 0-10 DVC signal proportional to load	Fails Low or No Output	PLC will detect excessive difference between #1 and #2 weighing systems. PLC will disable hoist and set brakes.	No effect.	3
			Fails High Output	PLC will detect excessive difference between #1 and #2 weighing systems. PLC will disable hoist and set brakes.	No effect.	3
	1,2,3,4	Excitation outputs and signal inputs from Auxiliary Hoist Load Cell	Fails Low or No Excitation	Load signal will be lost or be lower than expected. Output from control unit to PLC input will be zero volts or lower than expected. PLC will detect excessive difference between #1 and #2 weighing systems. PLC will disable hoist and set brakes.	No effect.	3
			Fails Low or No Output	Load signal will be lost or be lower than expected. Output from control unit to PLC input will be zero volts or lower than expected. PLC will detect excessive difference between #1 and #2 weighing systems. PLC will disable hoist and set brakes.	No effect.	3
			Fails High Input	Output from control unit to PLC input will be higher than expected. PLC will detect excessive difference between #1 and #2 weighing systems. PLC will disable hoist and set brakes.	No effect.	3

Table 20. **Electrical FMEA - Auxiliary Hoist Primary Mode**

System/Subsystem: 325 Ton Bridge Cranes at the Vehicle Assembly Building High Bays 1/2/3/4 / Auxiliary Hoist
PMN: H72-1200-01, -02
Drawing No.: EB-2508
Reference Figure: None

Find No. Part No.	Part Name	Part Function	a. Failure Mode b. Cause c. FMN d. Detection Method e. Correcting Action f. Time to Effect g. Timeframe	Failure Effect On System Performance	Failure Effect On Vehicle Systems And/Or Personnel Safety	Crit Cat
None	Resistor 20K Ohms	Prevent PLC input from “floating” when an input is not being provided by the weighing system	Fails Open	No effect. Hoist will not operate unless both weighing systems equal load signals to the PLC.	No effect.	3
			Fails Shorted	PLC input will be shorted to ground reference. PLC will detect difference between the two auxiliary hoist weighing systems. PLC will disable hoist and set brakes.	No effect.	3
I:0,6,16	PLC Input	Analog input for 0 - 10 VDC signal from Main / Auxiliary weighing system control unit	Fails Low or No Input	PLC will detect excessive difference between #1 and #2 weighing systems. PLC will disable hoist and set brakes.	No effect.	3
			Fails High Input	PLC will detect excessive difference between #1 and #2 weighing systems. PLC will disable hoist and set brakes.	No effect.	3
AWS2	Auxiliary Hoist Upper Block Weighing System No. 2 Strain Meter					
	P5-1, P5-2	Outputs analog signal proportional to load applied at strain gauge. Signal goes to PLC input	Fails Low or No Output	PLC will detect excessive difference between #1 and #2 weighing systems. PLC will disable hoist and set brakes.	No effect.	3
			Fails High Output	PLC will detect excessive difference between #1 and #2 weighing systems. PLC will disable hoist and set brakes.	No effect.	3

Table 20. **Electrical FMEA - Auxiliary Hoist Primary Mode**

System/Subsystem: 325 Ton Bridge Cranes at the Vehicle Assembly Building High Bays 1/2/3/4 / Auxiliary Hoist
PMN: H72-1200-01, -02
Drawing No.: EB-2508
Reference Figure: None

Find No. Part No.	Part Name	Part Function	a. Failure Mode b. Cause c. FMN d. Detection Method e. Correcting Action f. Time to Effect g. Timeframe	Failure Effect On System Performance	Failure Effect On Vehicle Systems And/Or Personnel Safety	Crit Cat
	P9-1, P3-1	Excitation outputs for Strain Gauge	Fails Low or No Excitation	Feedback level will be lower than expected or not present. Output to PLC will be lower than expected or zero. PLC will detect excessive difference between #1 and #2 weighing systems. PLC will disable hoist and set brakes.	No effect.	3
	P9-2, P9-3	Signal inputs from Strain Gauge	Fails Low or No Input	Output to PLC will be lower than expected or zero. PLC will detect excessive difference between #1 and #2 weighing systems. PLC will disable hoist and set brakes.	No effect.	3
			Fails High Input	Output from control unit to PLC input will be higher than expected. PLC will detect excessive difference between #1 and #2 weighing systems. PLC will disable hoist and set brakes.	No effect.	3
None	Strain Gauge, Upper Block	Alters excitation signal proportionally to load applied to Upper Block	Fails Low or No Output	Output from control unit to PLC input will be lower than expected or zero. PLC will detect excessive difference between #1 and #2 weighing systems. PLC will disable hoist and set brakes.	No effect.	3
			Fails High Output	Output from control unit to PLC input will be higher than expected. PLC will detect excessive difference between #1 and #2 weighing systems. PLC will disable hoist and set brakes.	No effect.	3

Table 20. **Electrical FMEA - Auxiliary Hoist Primary Mode**

System/Subsystem: 325 Ton Bridge Cranes at the Vehicle Assembly Building High Bays 1/2/3/4 / Auxiliary Hoist
PMN: H72-1200-01, -02
Drawing No.: EB-2508
Reference Figure: None

Find No. Part No.	Part Name	Part Function	a. Failure Mode b. Cause c. FMN d. Detection Method e. Correcting Action f. Time to Effect g. Timeframe	Failure Effect On System Performance	Failure Effect On Vehicle Systems And/Or Personnel Safety	Crit Cat
None	Resistor 20K Ohms	Prevent PLC input from “floating” when an input is not being provided by the weighing system	Fails Open	No effect. Hoist will not operate unless both weighing systems equal load signals to PLC.	No effect.	3
			Fails Shorted	PLC input will be shorted to ground reference. PLC will detect difference between the two auxiliary hoist weighing systems. PLC will disable hoist and set brakes.	No effect.	3
I:0,7,04	PLC Input	Analog input for signal from Auxiliary Hoist Upper Block Weighing System No. 2	Fails Low or No Input	PLC will detect excessive difference between #1 and #2 weighing systems. PLC will disable hoist and set brakes.	No effect.	3
			Fails High Input	PLC will detect excessive difference between #1 and #2 weighing systems. PLC will disable hoist and set brakes.	No effect.	3
ARFU1, ARFU2	Fuse	Protects upstream circuitry from overloads in Auxiliary Hoist Lower Block Rotate Drive	Prematurely Operates	Loss of power to rotate motor controller. Loss of ability to rotate load.	No effect.	3
			Fails to Operate	Opposite fuse will protect circuitry against overload. Requires previous failure to cause overload.	No effect.	3
ART	Transformer, Auxiliary Hoist Hook Rotation	Converts 480 VAC to 240 VAC for Auxiliary Hoist Lower Block Rotate Drive	Fails Open	Loss of power to rotate motor controller. Loss of ability to rotate load.	No effect.	3
			Fails Shorted	ARFU1 and ARFU2 will protect circuitry against overload.	No effect.	3

Table 20. **Electrical FMEA - Auxiliary Hoist Primary Mode**

System/Subsystem: 325 Ton Bridge Cranes at the Vehicle Assembly Building High Bays 1/2/3/4 / Auxiliary Hoist
PMN: H72-1200-01, -02
Drawing No.: EB-2508
Reference Figure: None

Find No. Part No.	Part Name	Part Function	a. Failure Mode b. Cause c. FMN d. Detection Method e. Correcting Action f. Time to Effect g. Timeframe	Failure Effect On System Performance	Failure Effect On Vehicle Systems And/Or Personnel Safety	Crit Cat
ARFU3	Fuse	Protects upstream circuitry from overloads in Auxiliary Hoist Lower Block Rotate Drive	Prematurely Operates	Loss of power to rotate motor controller. Loss of ability to rotate load.	No effect.	3
			Fails to Operate	ARFU1 and ARFU2 will protect circuitry against overload. Requires previous failure to cause overload.	No effect.	3
O:1,6,B1	PLC Output	Energizes start input of Auxiliary Hoist Lower Block Rotate Motor Controller	Fails De-energized	Start input of rotate motor controller will not be energized. Rotation drive will not operate.	No effect.	3
			Fails Energized	Start input of rotate motor controller will remain energized. Requires run input and a direction input to be energized before rotation will occur.	No effect.	3
O:1,6,B2	PLC Output	Energizes run input of Auxiliary Hoist Lower Block Rotate Motor Controller	Fails De-energized	Run input of rotate motor controller will not be energized. Rotation drive will not operate.	No effect.	3
			Fails Energized	Run input of rotate motor controller will remain energized. Requires start input and a direction input to be energized before rotation will occur.	No effect.	3
O:1,6,B3	PLC Output	Energizes FWD input of Auxiliary Hoist Lower Block Rotate Motor Controller	Fails De-energized	Forward input of rotate motor controller will not be energized. Rotation drive will not operate clockwise.	No effect.	3

Table 20. **Electrical FMEA - Auxiliary Hoist Primary Mode**

System/Subsystem: 325 Ton Bridge Cranes at the Vehicle Assembly Building High Bays 1/2/3/4 / Auxiliary Hoist
PMN: H72-1200-01, -02
Drawing No.: EB-2508
Reference Figure: None

Find No. Part No.	Part Name	Part Function	a. Failure Mode b. Cause c. FMN d. Detection Method e. Correcting Action f. Time to Effect g. Timeframe	Failure Effect On System Performance	Failure Effect On Vehicle Systems And/Or Personnel Safety	Crit Cat
			Fails Energized	Requires start input and run input to be energized before rotation will occur. Will operate clockwise normally. PLC will detect if controller attempts to operate in direction other than commanded and halt hook rotation.	No effect.	3
O:1,6,B4	PLC Output	Energizes REV input of Auxiliary Hoist Lower Block Rotate Motor Controller	Fails De-energized	Reverse input of rotate motor controller will not be energized. Rotation drive will not operate counterclockwise.	No effect.	3
			Fails Energized	Requires start input and run input to be energizes before rotation will occur. Will operate counterclockwise normally. PLC will detect if controller attempts to operate in direction other than commanded and halt hook rotation.	No effect.	3
ALBMC	Auxiliary Hoist Lower Block Motor Controller	Controls field and armature current for Auxiliary Hoist Hook Rotation Drive Motor				
	F1, F2	Field current outputs to Auxiliary Hoist Hook Rotation Motor	Fails Low or No Output	Hook rotation motor will not operate due to loss of field current or unable to develop sufficient torque. A weakened field will cause a rotation speed higher than expected. PLC will shut down hook rotation drive when it detects speed other than commanded.	No effect.	3

Table 20. **Electrical FMEA - Auxiliary Hoist Primary Mode**

System/Subsystem: 325 Ton Bridge Cranes at the Vehicle Assembly Building High Bays 1/2/3/4 / Auxiliary Hoist
PMN: H72-1200-01, -02
Drawing No.: EB-2508
Reference Figure: None

Find No. Part No.	Part Name	Part Function	a. Failure Mode b. Cause c. FMN d. Detection Method e. Correcting Action f. Time to Effect g. Timeframe	Failure Effect On System Performance	Failure Effect On Vehicle Systems And/Or Personnel Safety	Crit Cat
			Fails High Output	Higher field current will cause a slower rotation speed than expected and higher motor temperature. Will trip over temperature switch, disabling rotation drive. PLC will shut down hook rotation drive when it detects speed other than commanded.	No effect.	3
	ARM 47, ARM 45	Armature current outputs to Auxiliary Hoist Hook Rotation Motor	Fails Low or No Output	Hook rotation will not operate due to loss of armature current or will rotate slower than expected. PLC will shut down hook rotation drive when it detects speed other than commanded.	No effect.	3
			Fails High Output	Hook will rotate faster than expected. PLC will shut down hook rotation drive when it detects speed other than commanded.	No effect.	3
None	Auxiliary Hoist Lower Block Rotate Potentiometer	Provides interface from operator to command direction and speed of Auxiliary Hoist Hook Rotation Drive				
	CW	Contacts close to energize PLC inputs, commanding hook rotation drive to operate clockwise	Fails Open (single contact)	Hook rotation drive will not operate. Requires both PLC inputs to be energized to operate rotation drive.	No effect.	3
			Fails Closed (single contact)	No effect. Requires both PLC inputs to be energized to operate rotation drive.	No effect.	3

Table 20. **Electrical FMEA - Auxiliary Hoist Primary Mode**

System/Subsystem: 325 Ton Bridge Cranes at the Vehicle Assembly Building High Bays 1/2/3/4 / Auxiliary Hoist
PMN: H72-1200-01, -02
Drawing No.: EB-2508
Reference Figure: None

Find No. Part No.	Part Name	Part Function	a. Failure Mode b. Cause c. FMN d. Detection Method e. Correcting Action f. Time to Effect g. Timeframe	Failure Effect On System Performance	Failure Effect On Vehicle Systems And/Or Personnel Safety	Crit Cat
	CCW	Contacts close to energize PLC inputs, commanding hook rotation drive to operate counterclockwise	Fails Open (single contact)	Hook rotation drive will not operate. Requires both PLC inputs to be energized to operate rotation drive.	No effect.	3
			Fails Closed (single contact)	No effect. Requires both PLC inputs to be energized to operate rotation drives.	No effect.	3
	5K Potentiometer	Provides 0 to 10 Volt DC signal to rotation drive	Fails Open	Loss of speed command voltage to rotation drive. Drive will be enabled but will not rotate load.	No effect.	3
			Fails Short	Short will cause an overload of rotation drive power supply circuit causing fuse ARFU1, ARFU2 or ARFU3 to blow, resulting in loss of power to rotation drive. Unable to rotate load.	No effect.	3
GI:07,IN10	PLC Input	Energizes when CW contact closes, commanding load to rotate clockwise	Fails De-energized	Load will not rotate in direction commanded. PLC requires both direction inputs to enable drive.	No effect.	3
			Fails Energized	No effect. PLC requires both PLC inputs energized to command load to rotate clockwise.	No effect.	3
GI:08,IN10	PLC Input	Energizes when CW contact closes, commanding load to rotate clockwise	Fails De-energized	Load will not rotate in direction commanded. PLC requires both direction inputs to enable drive.	No effect.	3
			Fails Energized	No effect. PLC requires both PLC inputs energized to command load to rotate clockwise.	No effect.	3

Table 20. **Electrical FMEA - Auxiliary Hoist Primary Mode**

System/Subsystem: 325 Ton Bridge Cranes at the Vehicle Assembly Building High Bays 1/2/3/4 / Auxiliary Hoist
PMN: H72-1200-01, -02

Drawing No.: EB-2508
Reference Figure: None

Find No. Part No.	Part Name	Part Function	a. Failure Mode b. Cause c. FMN d. Detection Method e. Correcting Action f. Time to Effect g. Timeframe	Failure Effect On System Performance	Failure Effect On Vehicle Systems And/Or Personnel Safety	Crit Cat
GI:07,IN11	PLC Input	Energizes when CCW contact closes, commanding load to rotate counterclockwise	Fails De-energized	Load will not rotate in direction commanded. PLC requires both direction inputs to enable drive.	No effect.	3
			Fails Energized	No effect. PLC requires both PLC inputs energized to command load to rotate counterclockwise.	No effect.	3
GI:08,IN11	PLC Input	Energizes when CCW contact closes, commanding load to rotate counterclockwise	Fails De-energized	Load will not rotate in direction commanded. PLC requires both direction inputs to enable drive.	No effect.	3
			Fails Energized	No effect. PLC requires both PLC inputs energized to command load to rotate counterclockwise.	No effect.	3
None	Auxiliary Hoist Rotate Clutch Selector Switch	Contacts close to energize PLC inputs to engage or disengage hook rotation drive	Fails Open	Loss of ability to engage or disengage Hook Rotation Drive. Hook Rotation Drive will remain engaged or disengaged.	No effect.	3
			Fails Closed	Loss of ability to engage or disengage Hook Rotation Drive. Hook Rotation Drive will remain engaged or disengaged.	No effect.	3
I:2,5,D4	PLC Input	Energizes when selector switch is commanding the Hook Rotation Drive to engage	Fails De-energized	Engage signal from selector switch will not be received by PLC. Will not be able to engage hook rotation.	No effect.	3

Table 20. **Electrical FMEA - Auxiliary Hoist Primary Mode**

System/Subsystem: 325 Ton Bridge Cranes at the Vehicle Assembly Building High Bays 1/2/3/4 / Auxiliary Hoist
PMN: H72-1200-01, -02
Drawing No.: EB-2508
Reference Figure: None

Find No. Part No.	Part Name	Part Function	a. Failure Mode b. Cause c. FMN d. Detection Method e. Correcting Action f. Time to Effect g. Timeframe	Failure Effect On System Performance	Failure Effect On Vehicle Systems And/Or Personnel Safety	Crit Cat
			Fails energized	Loss of ability to disengage hook rotation. Indicator light on control cab console will indicate hook rotation still engaged.	No effect.	3
I:2,5,D5	PLC Input	Energizes when Hook Rotation Selector Switch is in the neutral position	Fails De-energized	No effect. Other PLC inputs will disable engage or disengage commands.	No effect.	3
			Fails energized	Loss of ability to engage or disengage Hook Rotation Drive.	No effect.	3
I:2,5,D6	PLC Input	Energizes when selector switch is commanding Hook Rotation Drive to disengage	Fails De-energized	Disengages signal from selector switch will not be received by PLC. Will not be able to disengage hook rotation.	No effect.	3
			Fails energized	Loss of ability to engage hook rotation. Indicator light on control cab console will indicate hook rotation not engaged.	No effect.	3
None	Auxiliary Hoist Rotate Display Reset Push Button	Contact closes to energize PLC inputs, commanding rotation display indicator to blank out and digital display to indicate ---.- degrees	Fails Open	Loss of ability to reset hook rotation display.	No effect.	3
			Fails Closed	Hook rotation display will remain in reset condition with rotation display indicator to be blanked out and digital display indicating ---.- degrees.	No effect.	3

Table 20. **Electrical FMEA - Auxiliary Hoist Primary Mode**

System/Subsystem: 325 Ton Bridge Cranes at the Vehicle Assembly Building High Bays 1/2/3/4 / Auxiliary Hoist
PMN: H72-1200-01, -02
Drawing No.: EB-2508
Reference Figure: None

Find No. Part No.	Part Name	Part Function	a. Failure Mode b. Cause c. FMN d. Detection Method e. Correcting Action f. Time to Effect g. Timeframe	Failure Effect On System Performance	Failure Effect On Vehicle Systems And/Or Personnel Safety	Crit Cat
GI:09,IN11	PLC Input	Energizes when Hook Rotation Display reset push button is pressed	Fails De-energized	Loss of ability to reset hook rotation display.	No effect.	3
			Fails Energized	Hook rotation display will remain in reset condition with rotation display indicator to be blanked out and digital display indicating ---.--- degrees.	No effect.	3
None	Auxiliary Hoist Rotate Engages Limit Switch	Contacts close to energize PLC input when hook rotation clutch mechanism is engaged	Fails Open	Linear actuator will not automatically stop operation at end of travel and light on cab control panel will not illuminate to indicate that the rotation drive is engaged. Actuator motor will stall out at end of travel. Possible damage to linear actuator if operator continually commands hook rotate engage. Hook rotation will operate if commanded. Requires operator error to command hook rotation when load can contact an obstruction.	No effect.	3
			Fails Closed	PLC will detect hook rotation drive is engaged continuously. PLC will prevent hook rotation drive from being engaged once it has been disengaged.	No effect.	3

Table 20. **Electrical FMEA - Auxiliary Hoist Primary Mode**

System/Subsystem: 325 Ton Bridge Cranes at the Vehicle Assembly Building High Bays 1/2/3/4 / Auxiliary Hoist
PMN: H72-1200-01, -02
Drawing No.: EB-2508
Reference Figure: None

Find No. Part No.	Part Name	Part Function	a. Failure Mode b. Cause c. FMN d. Detection Method e. Correcting Action f. Time to Effect g. Timeframe	Failure Effect On System Performance	Failure Effect On Vehicle Systems And/Or Personnel Safety	Crit Cat
AHHE	Relay, Auxiliary Hoist Hook Rotate Engaged	Energizes when Hook Rotation Engaged Limit switch closes	Fails De-energized	Indicator light on control cab console will not illuminate when hook rotation drive is engaged. Hook rotation drive will operate if commanded. Requires operator error to command hook rotation when load can contact an obstruction.	No effect.	3
			Fails Energized	Indicator light on control cab console will remain illuminated continuously when rotation drive is disengaged. Hook rotation drive will operate normally.	No effect.	3
	Contact	Closes to energize Auxiliary Hoist Hook Rotation engaged indicator light on control cab console	Fails Open	Indicator light on control cab console will not illuminate when hook rotation drive is engaged. Hook rotation drive will operate if commanded. Requires operator error to command hook rotation when load can contact an obstruction.	No effect.	3
			Fails Closed	Indicator light on control cab console will remain illuminated continuously when rotation drive is disengaged. Hook rotation drive will operate normally.	No effect.	3

Table 20. **Electrical FMEA - Auxiliary Hoist Primary Mode**

System/Subsystem: 325 Ton Bridge Cranes at the Vehicle Assembly Building High Bays 1/2/3/4 / Auxiliary Hoist
PMN: H72-1200-01, -02

Drawing No.: EB-2508
Reference Figure: None

Find No. Part No.	Part Name	Part Function	a. Failure Mode b. Cause c. FMN d. Detection Method e. Correcting Action f. Time to Effect g. Timeframe	Failure Effect On System Performance	Failure Effect On Vehicle Systems And/Or Personnel Safety	Crit Cat
I:2,4,C8	PLC Input	De-energizes when hook rotation limit switch opens	Fails De-energized	Linear actuator will not automatically stop operation when engaged limit switch is tripped. Hook rotation engaged indicator light will come on in control cab. Operator will release rotation engage switch when light comes on, stopping actuator operation.	No effect.	3
			Fails Energized	PLC will not allow extension of linear actuator to engage hook rotation. Unable to engage Hook Rotation Drive.	No effect.	3
None	Auxiliary Hoist Rotate Disengaged Limit Switch	Contacts close to energize PLC input when Hook Rotation Clutch mechanism is disengaged	Fails Open	PLC will not detect when hook rotation drive is disengaged and continue to operate the linear actuator as commanded by the operator. Actuator motor will stall out at end of travel. Possible damage to linear actuator if operator continually commands hook rotation disengage.	No effect.	3
			Fails Closed	PLC will detect Hook Rotation Drive is disengaged continuously. PLC will prevent Hook Rotation Drive from being disengaged once it has been engaged.	No effect.	3

Table 20. **Electrical FMEA - Auxiliary Hoist Primary Mode**

System/Subsystem: 325 Ton Bridge Cranes at the Vehicle Assembly Building High Bays 1/2/3/4 / Auxiliary Hoist
PMN: H72-1200-01, -02
Drawing No.: EB-2508
Reference Figure: None

Find No. Part No.	Part Name	Part Function	a. Failure Mode b. Cause c. FMN d. Detection Method e. Correcting Action f. Time to Effect g. Timeframe	Failure Effect On System Performance	Failure Effect On Vehicle Systems And/Or Personnel Safety	Crit Cat
I:2,5,D8	PLC Input	Energizes when hook rotation disengaged limit switch closes	Fails De-energized	PLC will detect Rotation Drive not disengaged and continue operation of actuator as commanded by operator. Actuator motor will stall out at end of travel. Possible damage to linear actuator if operator continually commands hook rotation disengage.	No effect.	3
			Fails Energized	PLC will detect Hook Rotation Drive is disengaged continuously. PLC will prevent Hook Rotation Drive from being disengaged once it has been engaged.	No effect.	3
None	Indicator Light, Auxiliary Hoist Hook Rotation Engaged	Illuminates when Auxiliary Hoist Hook Rotation Drive is engages	Fails Open	Indicator light on control cab console will not illuminate when Hook Rotation Drive is engaged. Hook Rotation Drive will operate if commanded. Requires operator error to command hook rotation when load can contact an obstruction.	No effect.	3
			Fails Shorted	When hook rotation is engaged, current overload will operate FU13, removing control power from Auxiliary Hoist. All drives will be disabled and all brakes will set.	No effect.	3
0:1,6,D3	PLC Output	Energizes relay ARTR, Auxiliary Hoist Hook Rotation Actuator Drive Retract	Fails De-energized	Loss of ability to disengage Hook Rotation Drive.	No effect.	3

Table 20. **Electrical FMEA - Auxiliary Hoist Primary Mode**

System/Subsystem: 325 Ton Bridge Cranes at the Vehicle Assembly Building High Bays 1/2/3/4 / Auxiliary Hoist
PMN: H72-1200-01, -02
Drawing No.: EB-2508
Reference Figure: None

Find No. Part No.	Part Name	Part Function	a. Failure Mode b. Cause c. FMN d. Detection Method e. Correcting Action f. Time to Effect g. Timeframe	Failure Effect On System Performance	Failure Effect On Vehicle Systems And/Or Personnel Safety	Crit Cat
			Fails Energized	When retract is commanded, actuator motor will run until it stalls out at end of travel. Possible damage to linear actuator due to overheating. Loss of ability to engage or disengage Hook Rotation Drive. Hook rotation will remain disengaged.	No effect.	3
ARTR	Relay, Auxiliary Hoist Hook Rotation Actuator Drive Retract	Energizes when PLC output commands Hook Rotation Actuator Drive to retract	Fails De-energized	Loss of ability to disengage Hook Rotation Drive.	No effect.	3
			Fails Energized	When retract is commanded, actuator motor will run until it stalls out at end of travel. Possible damage to linear actuator due to overheating. Loss of ability to engage or disengage Hook Rotation Drive. Hook rotation will remain disengaged.	No effect.	3
	Contact (1 of 4)	Closes to supply power to retract linear actuator	Fails Open	Loss of power to linear actuator. Loss of ability to retract linear actuator.	No effect.	3
			Fails Closed	Will provide path to short 24 volts AC to ground when extend is commanded. Possible damage to 24 Volt power supply. PLC will detect loss of 24 Volts and set brakes.	No effect.	3

Table 20. **Electrical FMEA - Auxiliary Hoist Primary Mode**

System/Subsystem: 325 Ton Bridge Cranes at the Vehicle Assembly Building High Bays 1/2/3/4 / Auxiliary Hoist
PMN: H72-1200-01, -02

Drawing No.: EB-2508
Reference Figure: None

Find No. Part No.	Part Name	Part Function	a. Failure Mode b. Cause c. FMN d. Detection Method e. Correcting Action f. Time to Effect g. Timeframe	Failure Effect On System Performance	Failure Effect On Vehicle Systems And/Or Personnel Safety	Crit Cat
O:1,6,D4	PLC Output	Energizes relay AEXT, Auxiliary Hoist Hook Rotation Actuator Drive Extend	Fails De-energized	Loss of ability to engage Hook Rotation Drive	No effect.	3
			Fails Energized	When extend is commanded, actuator motor will run until it stalls out at end of travel. Possible damage to linear actuator due to overheating. Loss of ability to engage or disengage Hook Rotation Drive Hook Rotation will remain engaged.	No effect.	3
AEXT	Relay, Auxiliary Hoist Hook Rotation Actuator Drive Extend	Energizes when PLC Output commands Hook Rotation Actuator Drive to extend	Fails De-energized	Loss of ability to engage Hook Rotation Drive.	No effect.	3
			Fails Energized	When extend is commanded, actuator motor will run until it stalls out at end of travel. Possible damage to linear actuator due to overheating. Loss of ability to engage or disengage Hook Rotation Drive. Hook rotation will remain engaged.	No effect.	3
	Contact (1 of 4)	Closed to supply power to extend linear actuator	Fails Open	Loss of power to linear actuator. Loss of ability to extend linear actuator.	No effect.	3
			Fails Closed	Will provide path to short 24 volts AC to ground when extend is commanded.	No effect.	3

Table 20. **Electrical FMEA - Auxiliary Hoist Primary Mode**

System/Subsystem: 325 Ton Bridge Cranes at the Vehicle Assembly Building High Bays 1/2/3/4 / Auxiliary Hoist
PMN: H72-1200-01, -02
Drawing No.: EB-2508
Reference Figure: None

Find No. Part No.	Part Name	Part Function	a. Failure Mode b. Cause c. FMN d. Detection Method e. Correcting Action f. Time to Effect g. Timeframe	Failure Effect On System Performance	Failure Effect On Vehicle Systems And/Or Personnel Safety	Crit Cat
MOT OT	Over Temperature Switch	Opens when Auxiliary Hoist Hook Rotate Drive motor temperature exceeds a preset valve	Fails Closed	Loss of overheat protection. Possible damage to motor due to overheating. Requires previous failure to cause overheating.	No effect.	3
			Fails Open	PLC will detect rotation drive motor overheated and disable rotation drive.	No effect.	3
I:2,5,B3	PLC Input	De-energizes when Auxiliary Hoist Hook Rotation Drive motor over temperature switch opens	Fails De-energized	PLC will detect Rotation Drive motor overheated and disable Rotation Drive.	No effect.	3
			Fails Energized	Loss of overheat protection. Possible damage to motor due to overheating. Requires previous failure to cause overheating.	No effect.	3
None	Auxiliary Hoist Linear Actuator	Converts electrical energy to kinetic energy to actuate Auxiliary Hoist Hook Rotation disengagement clutch	Fails Open	Loss of ability to engage or disengage Hook Rotation Drive.	No effect.	3
			Fails Shorted	Overcurrent will damage actuator drive or actuator drive will trip off or RAF2 will protect against overcurrent. Loss of ability to engage or disengage Hook Rotation Drive.	No effect.	3
None	Auxiliary Hoist Rotate Single Turn Resolver	Sends Auxiliary Hoist Hook Rotation position feedback through resolver interface to PLC	Fails No Output	Hook position display will be erratic due to data channel loss. Operator will halt hook rotation due to faulty data.	No effect.	3

Table 20. **Electrical FMEA - Auxiliary Hoist Primary Mode**

System/Subsystem: 325 Ton Bridge Cranes at the Vehicle Assembly Building High Bays 1/2/3/4 / Auxiliary Hoist
PMN: H72-1200-01, -02

Drawing No.: EB-2508
Reference Figure: None

Find No. Part No.	Part Name	Part Function	a. Failure Mode b. Cause c. FMN d. Detection Method e. Correcting Action f. Time to Effect g. Timeframe	Failure Effect On System Performance	Failure Effect On Vehicle Systems And/Or Personnel Safety	Crit Cat
ARIM	Auxiliary Hoist Lower Block Rotate Resolver Interface Module	Provides interface between rotation position resolver and PLC inputs	Fails Low or No Output	Hook position display will be erratic due to data channel loss. Operator will halt hook rotation due to faulty data.	No effect.	3
			Fails High Output	Hook position display will be erratic due to data channel loss. Operator will halt hook rotation due to faulty data.	No effect.	3
I:1,3,C1-C8, I:1,3,D1-D8	PLC Inputs	Inputs Auxiliary Hoist Rotate Resolver digital position (16 bit)	Fails De-energized (single input)	Hook position display will be erratic due to data channel loss. Operator will halt hook rotation due to faulty data.	No effect.	3
			Fails Energized (single input)	Hook position display will be erratic due to data channel loss. Operator will halt hook rotation due to faulty data.	No effect.	3
I:1,3,COM	PLC Input	Signal common for Hoist Rotate Resolver position inputs	Fails Disconnect	Hook position display will be erratic due to data channel loss. Operator will halt hook rotation due to faulty data.	No effect.	3

Electrical FMEA, Auxiliary Hoist Backup mode

Wire harnesses, cables, or connectors were not analyzed in the Electrical FMEA for this system since a single failure (open or short) could not result in the loss of life or vehicle. (Ref. NSTS 22206, Paragraph 4.4.1.b.2)

In Backup mode, it is assumed that a failure has occurred in the East drive which was detected and caused the Main / Auxiliary hoist to be disabled. The controls were configured for the single mode of operation by switching the drive select switch to West drive only and switching the East drive circuit Breaker off. The Main / Auxiliary hoist are now configured for their backup mode of operation whereby only the west drive will be utilized. The following “Back-Up” mode FMEA indicates only the areas where the system performance is altered. All other failure effects on system performance are identical to that of the “Normal” mode of operation.

This FMEA section references Ederer drawing EB-2508, specifically the following sheets:

Sheet	Title
20	AUX. Hoist West Motor Control Elementary
21	AUX. Hoist East Motor Control Elementary
22	AUX. Hoist Control Elementary
23	AUX. Hoist Control Elementary
24	AUX. Hoist Control Elementary
25	AUX. Hoist Control Elementary
26	AUX. Hoist West Motor Control Electronics Elementary
27	AUX. Hoist East Motor Control Electronics Elementary
28	AUX. Hoist Encoder Positioning System
29	AUX. Hoist Upper Block Weighting System #1
30	AUX. Hoist Upper Block Weighting System #2
31	AUX. Hoist Lower Block Rotate Motor Control Elementary
32	AUX. Hoist Lower Block Rotate Control Elementary
33	AUX. Hoist Lower Block Rotate Position System

Table 21. **Electrical FMEA - Auxiliary Hoist Backup Mode**

System/Subsystem: 325 Ton Bridge Cranes at the Vehicle Assembly Building High Bays 1/2/3/4 / Auxiliary Hoist
PMN: H72-1200-01, -02

Drawing No.: Eb-2508
Reference Figure: None

Find No. Part No.	Part Name	Part Function	a. Failure Mode b. Cause c. FMN d. Detection Method e. Correcting Action f. Time to Effect g. Timeframe	Failure Effect On System Performance	Failure Effect On Vehicle Systems And/Or Personnel Safety	Crit Cat
AWCA	Auxiliary Hoist West Cable Adapter	Provides interface between PLC and AWMCM, and field current feedback to AWMCM				
	15, Armature Current Feedback	Provides current feedback to PLC input	Fails No Output	Torque will not be proved. PLC will not allow hoist to operate. If failure occurs while hoist is operating, Delta Tau controller will increase armature current to correct for apparent low armature current output. Delta Tau controller will detect following error and signal PLC to disable hoist and set brakes if motor speed does not match commanded.	No effect.	3
	19, Field Current Feedback	Provides field current feedback to PLC input	Fails No Output	PLC will detect loss of field current, shut down hoist and set brakes. Delta Tau motion control board will attempt to servo hoist motors to commanded speed. If motors do not reach or maintain commanded speed, Delta Tau motion control board will detect following error, drive will be disabled and brakes will set.	No effect.	3

Table 21. **Electrical FMEA - Auxiliary Hoist Backup Mode**

System/Subsystem: 325 Ton Bridge Cranes at the Vehicle Assembly Building High Bays 1/2/3/4 / Auxiliary Hoist
PMN: H72-1200-01, -02
Drawing No.: Eb-2508
Reference Figure: None

Find No. Part No.	Part Name	Part Function	a. Failure Mode b. Cause c. FMN d. Detection Method e. Correcting Action f. Time to Effect g. Timeframe	Failure Effect On System Performance	Failure Effect On Vehicle Systems And/Or Personnel Safety	Crit Cat
	5, Field Current Reference Signal	Provides interface for field current command from PLC to AWMCM	Fails No Output	PLC will detect loss of field current, shut down hoist and set brakes. Motor control module will also detect loss of field current and shut down. PLC will detect motor control module not ready and set brakes. Delta Tau motion control board will attempt to servo hoist motors to commanded speed. If motors do not reach or maintain commanded speed, Delta Tau motion control board will detect following error, drive will be disabled and brakes will set.	No effect.	3
AWFB	Auxiliary Hoist West Field Board	Measures current in west motor field loop and sends feedback signal to AWMCM firing board				
	4, Field Current Feedback	Provides current feedback to AWMCM	Fails Low or No Output	Motor control module will increase field current to compensate for low feedback. PLC will detect loss of field current, shut down hoist and set brakes. Delta Tau motion control board will attempt to servo hoist motors to commanded speed. If motors do not reach or maintain commanded speed, Delta Tau motion control board will detect following error, drive will be disabled and brakes will set.	No effect.	3

Table 21. **Electrical FMEA - Auxiliary Hoist Backup Mode**

System/Subsystem: 325 Ton Bridge Cranes at the Vehicle Assembly Building High Bays 1/2/3/4 / Auxiliary Hoist
PMN: H72-1200-01, -02
Drawing No.: Eb-2508
Reference Figure: None

Find No. Part No.	Part Name	Part Function	a. Failure Mode b. Cause c. FMN d. Detection Method e. Correcting Action f. Time to Effect g. Timeframe	Failure Effect On System Performance	Failure Effect On Vehicle Systems And/Or Personnel Safety	Crit Cat
			Fails High Output	Motor control module will reduce field current to compensate. PLC will detect loss of field current, shut down hoist and set brakes. Delta Tau motion control board will attempt to servo hoist motors to commanded speed. If motors do not reach or maintain commanded speed, Delta Tau motion control board will detect following error, drive will be disabled and brakes will set.	No effect.	3
None	Resistor 20K ohms	Prevent PLC input from “floating” when an input is not being provided by AWCA	Fails Open	No effect. A floating data value will be latched into the PLC but will be cleared when torque is proved.	No effect.	3
			Fails Shorted	Torque will not be proved. PLC will not allow hoist to operate. If failure occurs while hoist is operating, Delta Tau controller will increase armature current to correct for apparent low armature current output. Delta Tau controller will detect following error and signal PLC to disable hoist and set brakes if motor speed does not match speed commanded.	No effect.	3

Table 21. **Electrical FMEA - Auxiliary Hoist Backup Mode**

System/Subsystem: 325 Ton Bridge Cranes at the Vehicle Assembly Building High Bays 1/2/3/4 / Auxiliary Hoist
PMN: H72-1200-01, -02
Drawing No.: Eb-2508
Reference Figure: None

Find No. Part No.	Part Name	Part Function	a. Failure Mode b. Cause c. FMN d. Detection Method e. Correcting Action f. Time to Effect g. Timeframe	Failure Effect On System Performance	Failure Effect On Vehicle Systems And/Or Personnel Safety	Crit Cat
I:0,6,I7	PLC Input	Provides armature current feedback to PLC	Fails Low or No Output	Torque will not be proved. PLC will not allow hoist to operate. If failure occurs while hoist is operating, Delta Tau controller will increase armature current to correct for apparent low armature current output. Delta Tau controller will detect following error and signal PLC to disable hoist and set brakes if motor speed does not match speed commanded.	No effect.	3
			Fails High Input	PLC will detect load imbalance, disable hoist and set brakes. Delta Tau motion controller will also detect loss of armature current feedback, disable hoist and set brakes. Delta Tau motion control board will attempt to servo hoist motors to commanded speed. If motors do not reach or maintain commanded speed, Delta Tau motion control board will detect following error, drive will be disabled and brakes will set.	No effect.	3
None	Resistor 20K Ohms	Prevent PLC input from “floating” when an input is not being provided by AWCA	Fails Open	No effect. Floating data value will be latched by PLC but will be cleared when torque is proved.	No effect.	3

Table 21. **Electrical FMEA - Auxiliary Hoist Backup Mode**

System/Subsystem: 325 Ton Bridge Cranes at the Vehicle Assembly Building High Bays 1/2/3/4 / Auxiliary Hoist
PMN: H72-1200-01, -02
Drawing No.: Eb-2508
Reference Figure: None

Find No. Part No.	Part Name	Part Function	a. Failure Mode b. Cause c. FMN d. Detection Method e. Correcting Action f. Time to Effect g. Timeframe	Failure Effect On System Performance	Failure Effect On Vehicle Systems And/Or Personnel Safety	Crit Cat
			Fails Shorted	Torque will not be proved. PLC will not allow hoist to operate. If failure occurs while hoist is operating, Delta Tau controller will increase armature current to correct for apparent low armature current output. Delta Tau controller will detect following error and signal PLC to disable hoist and set brakes if motor speed does not match speed commanded.	No effect.	3
None	Auxiliary Hoist Motor, West	Provide torque to mechanical drive system to move load				
	Armature Windings	Provides torque to rotate motor output shaft	Fails Open	Loss of current path for one hoist motor. Delta Tau motion controller will detect loss of armature current feedback and signal PLC to shutdown drive and set brakes. Delta Tau will continue to servo motor to commanded speed. If speed does not match speed commanded, Delta Tau will disable drive and set brakes.	No effect.	3
			Fails Shorted	Excessive current will flow through shorted motor. AWMCM will detect instantaneous overcurrent, disabling drive and setting brakes. Excessive current will trip overload switch, disabling drive, or Delta Tau motion control board will detect following error.	No effect.	3

Table 21. **Electrical FMEA - Auxiliary Hoist Backup Mode**

System/Subsystem: 325 Ton Bridge Cranes at the Vehicle Assembly Building High Bays 1/2/3/4 / Auxiliary Hoist
PMN: H72-1200-01, -02
Drawing No.: Eb-2508
Reference Figure: None

Find No. Part No.	Part Name	Part Function	a. Failure Mode b. Cause c. FMN d. Detection Method e. Correcting Action f. Time to Effect g. Timeframe	Failure Effect On System Performance	Failure Effect On Vehicle Systems And/Or Personnel Safety	Crit Cat
	Field Windings	Provides static magnetic field for armature magnetic field to work against	Fails Open	PLC will detect field loss and shut down drive and set brakes. Motor control module will detect field loss and drop out READY relays, disabling drives and setting brakes.	No effect.	3
			Fails Shorted	Excessive current will flow through remaining field winding creating a torque imbalance between the two motors. PLC will detect load imbalance and disable drives and set brakes. Delta Tau will continue to servo motor to commanded speed. If speed does not match speed commanded, Delta Tau will disable drive and set brakes.	No effect.	3
AECB	Circuit Breaker	Protects circuitry from overloads in Auxiliary Hoist East Drive circuit	Prematurely Operates	No effect. This circuit Breaker has been opened to disable the East drive and will not effect the operation of the hoist until the East drive is repaired and switched back online.	No effect.	3
			Fails to Operate	No effect. This circuit Breaker has been opened to disable the East drive and will not effect the operation of the hoist until the East drive is repaired and switched back online.	No effect.	3
AEIT	Isolation Transformer	Isolates Auxiliary Hoist East Drive circuit to reduce electrical noise and interference	Fails Open	No effect. Power to this component and East drive has been removed by opening AECB and will not affect the operation of the hoist until the East drive is repaired and switched back online.	No effect.	3

Table 21. **Electrical FMEA - Auxiliary Hoist Backup Mode**

System/Subsystem: 325 Ton Bridge Cranes at the Vehicle Assembly Building High Bays 1/2/3/4 / Auxiliary Hoist
PMN: H72-1200-01, -02
Drawing No.: Eb-2508
Reference Figure: None

Find No. Part No.	Part Name	Part Function	a. Failure Mode b. Cause c. FMN d. Detection Method e. Correcting Action f. Time to Effect g. Timeframe	Failure Effect On System Performance	Failure Effect On Vehicle Systems And/Or Personnel Safety	Crit Cat
			Fails Shorted	No effect. Power to this component and East drive has been removed by opening AECB and will not affect the operation of the hoist until the East drive is repaired and switched back online.	No effect.	3
AEFU1, AEFU2, AEFU3	Fuse	Protects circuitry from overloads in Auxiliary Hoist East Motor Blower circuit	Prematurely Operates	No effect. Power to this component and East drive has been removed by opening AECB and will not affect the operation of the hoist until the East drive is repaired and switched back online.	No effect.	3
			Fails to Operate	No effect. Power to this component and East drive has been removed by opening AECB and will not affect the operation of the hoist until the East drive is repaired and switched back online.	No effect.	3
AEPM	Auxiliary East Phase Monitor Relay	Monitors 3 phase power for proper phase relationships	Fails De-energized	No effect. Power to this component and East drive has been removed by opening AECB and will not affect the operation of the hoist until the East drive is repaired and switched back online.	No effect.	3
			Fails Energized	No effect. Power to this component and East drive has been removed by opening AECB and will not affect the operation of the hoist until the East drive is repaired and switched back online.	No effect.	3

Table 21. **Electrical FMEA - Auxiliary Hoist Backup Mode**

System/Subsystem: 325 Ton Bridge Cranes at the Vehicle Assembly Building High Bays 1/2/3/4 / Auxiliary Hoist
PMN: H72-1200-01, -02
Drawing No.: Eb-2508
Reference Figure: None

Find No. Part No.	Part Name	Part Function	a. Failure Mode b. Cause c. FMN d. Detection Method e. Correcting Action f. Time to Effect g. Timeframe	Failure Effect On System Performance	Failure Effect On Vehicle Systems And/Or Personnel Safety	Crit Cat
	Contact	Opens to de-energize relays AERDY, AEFRDY if improper phase relationship is detected	Fails Open	No effect. Power to this component and East drive has been removed by opening AECB and will not affect the operation of the hoist until the East drive is repaired and switched back online.	No effect.	3
			Fails Closed	No effect. Power to this component and East drive has been removed by opening AECB and will not affect the operation of the hoist until the East drive is repaired and switched back online.	No effect.	3
AEBOL	Overload Switch	Switch contact opens when excessive current is detected in Auxiliary Hoist East motor blower circuit	Prematurely Operates	No effect. Power to this component and East drive has been removed by opening AECB and will not affect the operation of the hoist until the East drive is repaired and switched back online.	No effect.	3
			Fails to Operate	No effect. Power to this component and East drive has been removed by opening AECB and will not affect the operation of the hoist until the East drive is repaired and switched back online.	No effect.	3
	Contact	Opens to de-energize PLC input	Fails Open	No effect. Power to this component and East drive has been removed by opening AECB and will not affect the operation of the hoist until the East drive is repaired and switched back online.	No effect.	3

Table 21. **Electrical FMEA - Auxiliary Hoist Backup Mode**

System/Subsystem: 325 Ton Bridge Cranes at the Vehicle Assembly Building High Bays 1/2/3/4 / Auxiliary Hoist
PMN: H72-1200-01, -02
Drawing No.: Eb-2508
Reference Figure: None

Find No. Part No.	Part Name	Part Function	a. Failure Mode b. Cause c. FMN d. Detection Method e. Correcting Action f. Time to Effect g. Timeframe	Failure Effect On System Performance	Failure Effect On Vehicle Systems And/Or Personnel Safety	Crit Cat
			Fails Closed	No effect. Power to this component and East drive has been removed by opening AECB and will not affect the operation of the hoist until the East drive is repaired and switched back online.	No effect.	3
None	Auxiliary Hoist East Blower Motor	Provide cooling airflow for Auxiliary Hoist East motor	Fails Open	No effect. Power to this component and East drive has been removed by opening AECB and will not affect the operation of the hoist until the East drive is repaired and switched back online.	No effect.	3
			Fails Shorted	No effect. Power to this component and East drive has been removed by opening AECB and will not affect the operation of the hoist until the East drive is repaired and switched back online.	No effect.	3
None	Resistor	Provides voltage input for Fault Sense Assembly	Fails Open	No effect. Power to this component and East drive has been removed by opening AECB and will not affect the operation of the hoist until the East drive is repaired and switched back online.	No effect.	3
			Fails Short	No effect. Power to this component and East drive has been removed by opening AECB and will not affect the operation of the hoist until the East drive is repaired and switched back online.	No effect.	3

Table 21. **Electrical FMEA - Auxiliary Hoist Backup Mode**

System/Subsystem: 325 Ton Bridge Cranes at the Vehicle Assembly Building High Bays 1/2/3/4 / Auxiliary Hoist
PMN: H72-1200-01, -02
Drawing No.: Eb-2508
Reference Figure: None

Find No. Part No.	Part Name	Part Function	a. Failure Mode b. Cause c. FMN d. Detection Method e. Correcting Action f. Time to Effect g. Timeframe	Failure Effect On System Performance	Failure Effect On Vehicle Systems And/Or Personnel Safety	Crit Cat
None	Tachometer	Generates voltage proportional to rotational speed of East Auxiliary Hoist Motor	Fails Low or No Output	No effect. Power to this component and East drive has been removed by opening AECB and will not affect the operation of the hoist until the East drive is repaired and switched back online.	No effect.	3
			Fails High Output	No effect. Power to this component and East drive has been removed by opening AECB and will not affect the operation of the hoist until the East drive is repaired and switched back online.	No effect.	3
AEMCM	Auxiliary Hoist East Motor Control Module	Provides primary armature and field control of East Auxiliary Hoist motor				
	Armature Current Outputs A1, A2	Provides current for Hoist Motor armature windings	Fails Low or No Output	No effect. Power to this component and East drive has been removed by opening AECB and will not affect the operation of the hoist until the East drive is repaired and switched back online.	No effect.	3
			Fails High Output	No effect. Power to this component and East drive has been removed by opening AECB and will not affect the operation of the hoist until the East drive is repaired and switched back online.	No effect.	3

Table 21. **Electrical FMEA - Auxiliary Hoist Backup Mode**

System/Subsystem: 325 Ton Bridge Cranes at the Vehicle Assembly Building High Bays 1/2/3/4 / Auxiliary Hoist
PMN: H72-1200-01, -02
Drawing No.: Eb-2508
Reference Figure: None

Find No. Part No.	Part Name	Part Function	a. Failure Mode b. Cause c. FMN d. Detection Method e. Correcting Action f. Time to Effect g. Timeframe	Failure Effect On System Performance	Failure Effect On Vehicle Systems And/Or Personnel Safety	Crit Cat
	Field Current Outputs, F1, F2	Provides current for Hoist Motor Field Windings	Fails Low or No Output	No effect. Power to this component and East drive has been removed by opening AECB and will not affect the operation of the hoist until the East drive is repaired and switched back online.	No effect.	3
			Fails High Output	No effect. Power to this component and East drive has been removed by opening AECB and will not affect the operation of the hoist until the East drive is repaired and switched back online.	No effect.	3
AECA	Auxiliary Hoist East Cable Adapter	Provides interface between PLC and AEMCM, and field current feedback to AEMCM				
	15, Armature Current Feedback	Provides current feedback to PLC input	Fails no output	No effect. Power to this component and East drive has been removed by opening AECB and will not affect the operation of the hoist until the East drive is repaired and switched back online.	No effect.	3
	19, Field Current Feedback	Provides field current feedback to PLC input	Fails No Output	No effect. Power to this component and East drive has been removed by opening AECB and will not affect the operation of the hoist until the East drive is repaired and switched back online.	No effect.	3

Table 21. **Electrical FMEA - Auxiliary Hoist Backup Mode**

System/Subsystem: 325 Ton Bridge Cranes at the Vehicle Assembly Building High Bays 1/2/3/4 / Auxiliary Hoist
PMN: H72-1200-01, -02
Drawing No.: Eb-2508
Reference Figure: None

Find No. Part No.	Part Name	Part Function	a. Failure Mode b. Cause c. FMN d. Detection Method e. Correcting Action f. Time to Effect g. Timeframe	Failure Effect On System Performance	Failure Effect On Vehicle Systems And/Or Personnel Safety	Crit Cat
	5, Field Current Reference Signal	Provides interface for field current command from PLC to AEMCM	Fails No Output	No effect. Power to this component and East drive has been removed by opening AECB and will not affect the operation of the hoist until the East drive is repaired and switched back online.	No effect.	3
AEFB	Auxiliary Hoist East Field Board	Measures current in East motor field loop and sends feedback signal to AEMCM firing board				
	4, Field Current Feedback	Provides current feedback to AEMCM	Fails Low or No Output	No effect. Power to this component and East drive has been removed by opening AECB and will not affect the operation of the hoist until the East drive is repaired and switched back online.	No effect.	3
			Fails High Output	No effect. Power to this component and East drive has been removed by opening AECB and will not affect the operation of the hoist until the East drive is repaired and switched back online.	No effect.	3
O:0,5,O4	PLC Output	Provides field current reference signal to AECA	Fails Low or No Output	No effect. Power to this component and East drive has been removed by opening AECB and will not affect the operation of the hoist until the East drive is repaired and switched back online.	No effect.	3

Table 21. **Electrical FMEA - Auxiliary Hoist Backup Mode**

System/Subsystem: 325 Ton Bridge Cranes at the Vehicle Assembly Building High Bays 1/2/3/4 / Auxiliary Hoist
PMN: H72-1200-01, -02
Drawing No.: Eb-2508
Reference Figure: None

Find No. Part No.	Part Name	Part Function	a. Failure Mode b. Cause c. FMN d. Detection Method e. Correcting Action f. Time to Effect g. Timeframe	Failure Effect On System Performance	Failure Effect On Vehicle Systems And/Or Personnel Safety	Crit Cat
			Fails High Output	No effect. Power to this component and East drive has been removed by opening AECB and will not affect the operation of the hoist until the East drive is repaired and switched back online.	No effect.	3
None	Resistor 20K Ohm	Prevent PLC input from “floating” when an input is not being provided by AECA	Fails Open	No effect. Power to this component and East drive has been removed by opening AECB and will not affect the operation of the hoist until the East drive is repaired and switched back online.	No effect.	3
			Fails Shorted	No effect. Power to this component and East drive has been removed by opening AECB and will not affect the operation of the hoist until the East drive is repaired and switched back online.	No effect.	3
I:0,6,I8	PLC Input	Provides armature current feedback to PLC	Fails Low or No Output	No effect. Power to this component and East drive has been removed by opening AECB and will not affect the operation of the hoist until the East drive is repaired and switched back online.	No effect.	3
			Fails High Input	No effect. Power to this component and East drive has been removed by opening AECB and will not affect the operation of the hoist until the East drive is repaired and switched back online.	No effect.	3

Table 21. **Electrical FMEA - Auxiliary Hoist Backup Mode**

System/Subsystem: 325 Ton Bridge Cranes at the Vehicle Assembly Building High Bays 1/2/3/4 / Auxiliary Hoist
PMN: H72-1200-01, -02
Drawing No.: Eb-2508
Reference Figure: None

Find No. Part No.	Part Name	Part Function	a. Failure Mode b. Cause c. FMN d. Detection Method e. Correcting Action f. Time to Effect g. Timeframe	Failure Effect On System Performance	Failure Effect On Vehicle Systems And/Or Personnel Safety	Crit Cat
None	Resistor 20K Ohm	Prevent PLC input from “floating” when an input is not being provided by AECA	Fails Open	No effect. Power to this component and East drive has been removed by opening AECB and will not affect the operation of the hoist until the East drive is repaired and switched back online.	No effect.	3
			Fails Shorted	No effect. Power to this component and East drive has been removed by opening AECB and will not affect the operation of the hoist until the East drive is repaired and switched back online.	No effect.	3
I:0,7,I2	PLC Input	Provides field current feedback to PLC	Fails Low or No Output	No effect. Power to this component and East drive has been removed by opening AECB and will not affect the operation of the hoist until the East drive is repaired and switched back online.	No effect.	3
			Fails High Output	No effect. Power to this component and East drive has been removed by opening AECB and will not affect the operation of the hoist until the East drive is repaired and switched back online.	No effect.	3
AEOL	Overload Switch	Contact opens when excessive current is detected in motor armature loop	Prematurely Operates	No effect. Power to this component and East drive has been removed by opening AECB and will not affect the operation of the hoist until the East drive is repaired and switched back online.	No effect.	3

Table 21. **Electrical FMEA - Auxiliary Hoist Backup Mode**

System/Subsystem: 325 Ton Bridge Cranes at the Vehicle Assembly Building High Bays 1/2/3/4 / Auxiliary Hoist
PMN: H72-1200-01, -02
Drawing No.: Eb-2508
Reference Figure: None

Find No. Part No.	Part Name	Part Function	a. Failure Mode b. Cause c. FMN d. Detection Method e. Correcting Action f. Time to Effect g. Timeframe	Failure Effect On System Performance	Failure Effect On Vehicle Systems And/Or Personnel Safety	Crit Cat
			Fails to Operate	No effect. Power to this component and East drive has been removed by opening AECB and will not affect the operation of the hoist until the East drive is repaired and switched back online.	No effect.	3
	Contact, Normally Closed	De-energizes PLC input when overload switch detects excessive current in motor armature loop	Fails Open	No effect. Power to this component and East drive has been removed by opening AECB and will not affect the operation of the hoist until the East drive is repaired and switched back online.	No effect.	3
			Fails Closed	No effect. Power to this component and East drive has been removed by opening AECB and will not affect the operation of the hoist until the East drive is repaired and switched back online.	No effect.	3
None	Ammeter	Indicates amount of current flowing in motor armature loop	Fails Open	No effect. Power to this component and East drive has been removed by opening AECB and will not affect the operation of the hoist until the East drive is repaired and switched back online.	No effect.	3
			Fails Shorted	No effect. Power to this component and East drive has been removed by opening AECB and will not affect the operation of the hoist until the East drive is repaired and switched back online.	No effect.	3

Table 21. **Electrical FMEA - Auxiliary Hoist Backup Mode**

System/Subsystem: 325 Ton Bridge Cranes at the Vehicle Assembly Building High Bays 1/2/3/4 / Auxiliary Hoist
PMN: H72-1200-01, -02
Drawing No.: Eb-2508
Reference Figure: None

Find No. Part No.	Part Name	Part Function	a. Failure Mode b. Cause c. FMN d. Detection Method e. Correcting Action f. Time to Effect g. Timeframe	Failure Effect On System Performance	Failure Effect On Vehicle Systems And/Or Personnel Safety	Crit Cat
None	Auxiliary Hoist Motor, East	Provide torque to mechanical drive system to move load				
	Armature Windings	Provides torque to rotate motor output shaft	Fails Open	No effect. Power to this component and East drive has been removed by opening AECB and will not affect the operation of the hoist until the East drive is repaired and switched back online.	No effect.	3
			Fails Shorted	No effect. Power to this component and East drive has been removed by opening AECB and will not affect the operation of the hoist until the East drive is repaired and switched back online.	No effect.	3
	Field windings	Provides static magnetic field for armature magnetic field to work against	Fails Open	No effect. Power to this component and East drive has been removed by opening AECB and will not affect the operation of the hoist until the East drive is repaired and switched back online.	No effect.	3
			Fails Shorted	No effect. Power to this component and East drive has been removed by opening AECB and will not affect the operation of the hoist until the East drive is repaired and switched back online.	No effect.	3
I:2,4,C1	PLC Input	De-energizes when overload switch detects excessive current in Auxiliary hoist East armature current loop	Fails De-energized	PLC will detect excessive current through motor. PLC will disable drive and set brakes.	No effect.	3

Table 21. **Electrical FMEA - Auxiliary Hoist Backup Mode**

System/Subsystem: 325 Ton Bridge Cranes at the Vehicle Assembly Building High Bays 1/2/3/4 / Auxiliary Hoist
PMN: H72-1200-01, -02
Drawing No.: Eb-2508
Reference Figure: None

Find No. Part No.	Part Name	Part Function	a. Failure Mode b. Cause c. FMN d. Detection Method e. Correcting Action f. Time to Effect g. Timeframe	Failure Effect On System Performance	Failure Effect On Vehicle Systems And/Or Personnel Safety	Crit Cat
			Fails Energized	No effect. East drive has been disabled.	No effect.	3
AWDC	Auxiliary Hoist West DC Contactor Relay	Energizes when Auxiliary Hoist west drive is enabled	Fails De-energized	DC armature loop will open. Torque will not be proved or if hoist is in operation, Delta Tau motion controller will detect following error and signal PLC to disable drives and set brakes.	No effect.	3
			Fails Energized	DC motor armature loop will remain closed. PLC will disable drives and set brakes.	No effect.	3
	Contact	Closes to complete DC armature loop of Auxiliary Hoist west motor	Fails Open	DC armature loop will open. Torque will not be proved or if hoist is in operation, Delta Tau motion controller will detect following error and signal PLC to disable drives and set brakes.	No effect.	3
			Fails Closed	DC motor armature loop will remain closed. PLC will disable drives and set brakes.	No effect.	3
	Contact	Closes to enable AEFSA and AEMCM	Fails Open	AEFSA will not enable AEMCM. Hoist will not operate; brakes will (remain) set.	No effect.	3
			Fails Closed	Other AEDC contact will open DC motor armature loop. PLC will disable drives and set brakes.	No effect.	3

Table 21. **Electrical FMEA - Auxiliary Hoist Backup Mode**

System/Subsystem: 325 Ton Bridge Cranes at the Vehicle Assembly Building High Bays 1/2/3/4 / Auxiliary Hoist
PMN: H72-1200-01, -02
Drawing No.: Eb-2508
Reference Figure: None

Find No. Part No.	Part Name	Part Function	a. Failure Mode b. Cause c. FMN d. Detection Method e. Correcting Action f. Time to Effect g. Timeframe	Failure Effect On System Performance	Failure Effect On Vehicle Systems And/Or Personnel Safety	Crit Cat
AEDC	Auxiliary Hoist East DC Contactor Relay	Energizes when Auxiliary Hoist East drive is enables	Fails De-energized	No effect. This component is not powered when using Auxiliary Hoist West drive only and will not affect operation of the hoist until the East drive has been restored to service and selected for use.	No effect.	3
			Fails Energized	No effect. This component is not powered when using Auxiliary Hoist West drive only and will not affect operation of the hoist until the East drive has been restored to service and selected for use.	No effect.	3
	Contact	Closes to complete DC armature loop of Auxiliary Hoist East motor	Fails Open	No effect. This component is not powered when using Auxiliary Hoist West drive only and will not affect operation of the hoist until the East drive has been restored to service and selected for use.	No effect.	3
			Fails Closed	No effect. This component is not powered when using Auxiliary Hoist West drive only and will not affect operation of the hoist until the East drive has been restored to service and selected for use.	No effect.	3
	Contact	Closes to enable AEFSA and AEMCM	Fails Open	No effect. This component is not powered when using Auxiliary Hoist West drive only and will not affect operation of the hoist until the East drive has been restored to service and selected for use.	No effect.	3

Table 21. **Electrical FMEA - Auxiliary Hoist Backup Mode**

System/Subsystem: 325 Ton Bridge Cranes at the Vehicle Assembly Building High Bays 1/2/3/4 / Auxiliary Hoist
PMN: H72-1200-01, -02
Drawing No.: Eb-2508
Reference Figure: None

Find No. Part No.	Part Name	Part Function	a. Failure Mode b. Cause c. FMN d. Detection Method e. Correcting Action f. Time to Effect g. Timeframe	Failure Effect On System Performance	Failure Effect On Vehicle Systems And/Or Personnel Safety	Crit Cat
			Fails Closed	No effect. This component is not powered when using Auxiliary Hoist West drive only and will not affect operation of the hoist until the East drive has been restored to service and selected for use.	No effect.	3
AWDE	Auxiliary Hoist West Drive Enable Relay	Energizes when Auxiliary Hoist west drive is enabled by PLC and relay AWRDY and AWFLT	Fails De-energized	AWDE contacts will not enable AWMCM or cause AWDC relay to close DC motor armature loop. PLC will disable drives and set brakes.	No effect.	3
			Fails Energized	Requires previous failure to de-energize. Previous failures will have either faulted the motor control module or were detected by the PLC. Drives will be disabled and brakes will set.	No effect.	3
	Contact	Closes to supply power to relay AWDC	Fails Open	Relay AWDC will not energize to complete DC motor armature loop. or enable AWMCM. Hoist will not operate and brakes will (remain) set.	No effect.	3
			Fails Closed	Requires previous failure to de-energize. Previous failures will have either faulted the motor control module or were detected by the PLC. Drives will be disabled and brakes will set.	No effect.	3
	Contact	Closes to enable AWMCM	Fails Open	Motor control module will not be enabled. Hoist will not operate, brakes will (remain) set.	No effect.	3

Table 21. **Electrical FMEA - Auxiliary Hoist Backup Mode**

System/Subsystem: 325 Ton Bridge Cranes at the Vehicle Assembly Building High Bays 1/2/3/4 / Auxiliary Hoist
PMN: H72-1200-01, -02
Drawing No.: Eb-2508
Reference Figure: None

Find No. Part No.	Part Name	Part Function	a. Failure Mode b. Cause c. FMN d. Detection Method e. Correcting Action f. Time to Effect g. Timeframe	Failure Effect On System Performance	Failure Effect On Vehicle Systems And/Or Personnel Safety	Crit Cat
			Fails Closed	Requires previous failure to de-energize. Previous failures will have either faulted the motor control module or were detected by the PLC. Drives will be disabled and brakes will set.	No effect.	3
O:1,7,B2	PLC Output	Supplies power to energize relay AEDE and PLC input	Fails De-energized	No effect. This output is not used when using Auxiliary Hoist West drive only and will not affect operation of the hoist until the East drive has been restored to service and is selected for use.	No effect.	3
			Fails Energized	Other PLC output will de-energize relay AEDE.	No effect.	3
O:1,8,C1	PLC Output	Supplies power to energize relay AEDE and PLC input	Fails De-energized	No effect. This output is not used when using Auxiliary Hoist West drive only and will not affect operation of the hoist until the East drive has been restored to service and is selected for use.	No effect.	3
			Fails Energized	Other PLC output will de-energize relay AEDE.	No effect.	3
I:2,3,B4	PLC Input	Energizes when power is supplied to relay AEDE	Fails De-energized	No effect. This component is not powered when using Auxiliary Hoist West drive only and will not affect operation of the hoist until the East drive has been restored to service and is selected for use.	No effect.	3

Table 21. **Electrical FMEA - Auxiliary Hoist Backup Mode**

System/Subsystem: 325 Ton Bridge Cranes at the Vehicle Assembly Building High Bays 1/2/3/4 / Auxiliary Hoist
PMN: H72-1200-01, -02
Drawing No.: Eb-2508
Reference Figure: None

Find No. Part No.	Part Name	Part Function	a. Failure Mode b. Cause c. FMN d. Detection Method e. Correcting Action f. Time to Effect g. Timeframe	Failure Effect On System Performance	Failure Effect On Vehicle Systems And/Or Personnel Safety	Crit Cat
			Fails Energized	PLC will detect circuit Breaker configuration does not match drive selection and not allow hoist to operate, brakes will (remain) set.	No effect.	3
AEDE	Auxiliary Hoist East Drive Enable Relay	Energizes when Auxiliary Hoist East drive is enabled by PLC and relays AERDY and AEFLT	Fails De-energized	No effect. This component is not powered when using Auxiliary Hoist West drive only and will not affect operation of the hoist until the East drive has been restored to service and is selected for use.	No effect.	3
			Fails Energized	No effect. MEMCM is not powered in the West drive only configuration and will not affect the operation of the hoist.	No effect.	3
	Contact	Closes to supply power to relay AEDC	Fails Open	No effect. This component is not powered when using Auxiliary Hoist West drive only and will not affect operation of the hoist until the East drive has been restored to service and is selected for use.	No effect.	3
			Fails Closed	No effect. MEMCM is not powered in the West drive only configuration and will not affect the operation of the hoist.	No effect.	3
	Contact	Closes to enable AEMCM	Fails Open	No effect. This component is not powered when using Auxiliary Hoist West drive only and will not affect operation of the hoist until the East drive has been restored to service and is selected for use.	No effect.	3

Table 21. **Electrical FMEA - Auxiliary Hoist Backup Mode**

System/Subsystem: 325 Ton Bridge Cranes at the Vehicle Assembly Building High Bays 1/2/3/4 / Auxiliary Hoist
PMN: H72-1200-01, -02
Drawing No.: Eb-2508
Reference Figure: None

Find No. Part No.	Part Name	Part Function	a. Failure Mode b. Cause c. FMN d. Detection Method e. Correcting Action f. Time to Effect g. Timeframe	Failure Effect On System Performance	Failure Effect On Vehicle Systems And/Or Personnel Safety	Crit Cat
			Fails Closed	No effect. MEMCM is not powered in the West drive only configuration and will not affect the operation of the hoist.	No effect.	3
O:2,2,A4	PLC Output	Supplies power to Auxiliary Hoist drive imbalance display and light on cab console	Fails De-energized	Hoist load imbalance light will not be illuminated during West drive only hoist operation.	No effect.	3
			Fails Energized	Hoist imbalance light will remain illuminated continuously. Hoist will operate normally.	No effect.	3
None	Indicator Light	Illuminates to indicate Auxiliary Hoist has a load imbalance	Fails Open	Hoist load imbalance light will not be illuminated during West drive only hoist operation.	No effect.	3
			Fails Shorted	When load imbalance occurs, current overload will trip circuit Breaker CCB if hoist imbalance occurs. CCB tripping will cause loss of control power to crane. All drives will be disabled and all brakes will be set.	No effect.	3
O:2,2,A6	PLC Output	Supplies power to energize relay AEBS	Fails De-energized	No effect. This output is not used when using Auxiliary Hoist West drive only and will not affect operation of the hoist until the East drive has been restored to service and selected for use.	No effect.	3

Table 21. **Electrical FMEA - Auxiliary Hoist Backup Mode**

System/Subsystem: 325 Ton Bridge Cranes at the Vehicle Assembly Building High Bays 1/2/3/4 / Auxiliary Hoist
PMN: H72-1200-01, -02
Drawing No.: Eb-2508
Reference Figure: None

Find No. Part No.	Part Name	Part Function	a. Failure Mode b. Cause c. FMN d. Detection Method e. Correcting Action f. Time to Effect g. Timeframe	Failure Effect On System Performance	Failure Effect On Vehicle Systems And/Or Personnel Safety	Crit Cat
			Fails energized	No effect. This output is not used when using Auxiliary Hoist West drive only and will not affect operation of the hoist until the East drive has been restored to service and selected for use.	No effect.	3
AEBS	Auxiliary Hoist East Blower Starter Relay	Energizes when commanded by PLC and AEBOL switch has not tripped	Fails De-energized	No effect. This output is not used when using Auxiliary Hoist West drive only and will not affect operation of the hoist until the East drive has been restored to service and selected for use.	No effect.	3
			Fails energized	No effect. This output is not used when using Auxiliary Hoist West drive only and will not affect operation of the hoist until the East drive has been restored to service and selected for use.	No effect.	3
	Contacts	Close to supply power to Auxiliary Hoist East blower motor	Fails Open	No effect. This output is not used when using Auxiliary Hoist West drive only and will not affect operation of the hoist until the East drive has been restored to service and selected for use.	No effect.	3
			Fails Closed	No effect. This output is not used when using Auxiliary Hoist West drive only and will not affect operation of the hoist until the East drive has been restored to service and selected for use.	No effect.	3

Table 21. **Electrical FMEA - Auxiliary Hoist Backup Mode**

System/Subsystem: 325 Ton Bridge Cranes at the Vehicle Assembly Building High Bays 1/2/3/4 / Auxiliary Hoist
PMN: H72-1200-01, -02

Drawing No.: Eb-2508
Reference Figure: None

Find No. Part No.	Part Name	Part Function	a. Failure Mode b. Cause c. FMN d. Detection Method e. Correcting Action f. Time to Effect g. Timeframe	Failure Effect On System Performance	Failure Effect On Vehicle Systems And/Or Personnel Safety	Crit Cat
I:2,5,C8	PLC Input	Energizes when Auxiliary Hoist West drive only is selected	Fails De-energized	Will cause PLC fault. PLC will disable drive and brakes will be set.	No effect.	3
			Fails Energized	No effect. Input should be energized during West drive only hoist operation.	No effect.	3
I:2,5,D1	PLC Input	Energizes when both Auxiliary Hoist drives are selected	Fails De-energized	No effect. Input should be de-energized during West drive only hoist operation.	No effect.	3
			Fails Energized	PLC will detect drive select switch does not match circuit Breaker. Hoist drives will be disabled and brakes will set.	No effect.	3
I:2,5,D2	PLC Input	Energizes when Auxiliary Hoist East Drive only is selected	Fails De-energized	No effect. Input should be de-energized during West drive only hoist operation.	No effect.	3
			Fails Energized	PLC will detect drive select switch does not match circuit Breaker. Hoist drives will be disabled and brakes will set.	No effect.	3
AEMTW	Motogard Overtemp Module	Supplies power to Auxiliary Hoist East overtemp warning light when an above normal motor temperature is detected	Fails Low or No Output	Loss of overtemp warning. No effect to hoist operation since East drive is disabled during West hoist only operation.	No effect.	3
			Fails High Output	Overtemp warning light will remain on continuously.	No effect.	3

Table 21. **Electrical FMEA - Auxiliary Hoist Backup Mode**

System/Subsystem: 325 Ton Bridge Cranes at the Vehicle Assembly Building High Bays 1/2/3/4 / Auxiliary Hoist
PMN: H72-1200-01, -02
Drawing No.: Eb-2508
Reference Figure: None

Find No. Part No.	Part Name	Part Function	a. Failure Mode b. Cause c. FMN d. Detection Method e. Correcting Action f. Time to Effect g. Timeframe	Failure Effect On System Performance	Failure Effect On Vehicle Systems And/Or Personnel Safety	Crit Cat
None	Overtemp Warning Light	Indicates an above normal operating temperature in Auxiliary Hoist East motor	Fails Open	Loss of overtemp warning. No effect to hoist operation since East drive is disabled during West hoist only operation.	No effect.	3
			Fails Shorted	When overtemp occurs, current overload will blow FU13. Auxiliary hoist drive will be disabled.	No effect.	3
None	East Motor Shut Down Thermistor	Provides variable resistance proportional to motor temperature	Fails Open	No effect. Overtemp shutdown module will continue to energize PLC input as expected.	No effect.	3
			Fails Shorted	Overtemp module will de-energize PLC input, PLC will illuminate overtemp shutdown light but will allow continued hoist operation since East drive is already disabled during West drive only operation.	No effect.	3
AEMTS	Motogard Over Temp Module	Energize PLC input when overtemp is detected in Auxiliary Hoist East motor	Fails Low or No Output	Overtemp module will de-energize PLC input, PLC will illuminate overtemp shutdown light but will allow continued hoist operation since East drive is already disabled during West drive only operation.	No effect.	3
			Fails High Output	No effect. Overtemp shutdown module will continue to energize PLC input as expected.	No effect.	3
I:2,3,B8	PLC Input	Energized by AEMTS when on overtemp condition occurs in Auxiliary Hoist East motor	Fails De-energized	PLC will illuminate overtemp shutdown light but will allow continued hoist operation since East drive is already disabled during West drive only operation	No effect.	3

Table 21. **Electrical FMEA - Auxiliary Hoist Backup Mode**

System/Subsystem: 325 Ton Bridge Cranes at the Vehicle Assembly Building High Bays 1/2/3/4 / Auxiliary Hoist
PMN: H72-1200-01, -02
Drawing No.: Eb-2508
Reference Figure: None

Find No. Part No.	Part Name	Part Function	a. Failure Mode b. Cause c. FMN d. Detection Method e. Correcting Action f. Time to Effect g. Timeframe	Failure Effect On System Performance	Failure Effect On Vehicle Systems And/Or Personnel Safety	Crit Cat
			Fails Energized	No effect. East drive has already been disabled during West drive only operation.	No effect.	3
GO:11,10	PLC Output	Sends power to Auxiliary Hoist East motor overtemp indication light when overtemp occurs or indicator lights are tested	Fails De-energized	Loss of motor overtemp shut down indication.	No effect.	3
			Fails Energized	Auxiliary Hoist west motor overtemp indication light will remain illuminated continuously.	No effect.	3
None	Overtemp Shut Down Light	Indicates an above normal operating temperature in Auxiliary Hoist East motor and hoist drive have disabled	Fails Open	Loss of overtemp shut down indication.	No effect.	3
			Fails Shorted	When overtemp occurs, current overload will blow FU13. Hoist drive will be disabled.	No effect.	3
AWMCM (continued)	Auxiliary Hoist West Motor Control Module	Provides primary armature and field control of Auxiliary Hoist West Motor				
	J1-8,9	DC current reference input from Delta Tau motion controller	Fails Low	AWMCM will provide too low of a current to achieve or maintain speed commanded. Delta Tau motion controller will detect following error. PLC will shut down hoist drive and set brakes.	No effect.	3

Table 21. **Electrical FMEA - Auxiliary Hoist Backup Mode**

System/Subsystem: 325 Ton Bridge Cranes at the Vehicle Assembly Building High Bays 1/2/3/4 / Auxiliary Hoist
PMN: H72-1200-01, -02
Drawing No.: Eb-2508
Reference Figure: None

Find No. Part No.	Part Name	Part Function	a. Failure Mode b. Cause c. FMN d. Detection Method e. Correcting Action f. Time to Effect g. Timeframe	Failure Effect On System Performance	Failure Effect On Vehicle Systems And/Or Personnel Safety	Crit Cat
			Fails High	AWMCM will provide too low of a current to achieve or maintain speed commanded. Delta Tau motion controller will detect following error. PLC will shut down hoist drive and set brakes.	No effect.	3
	J2-8	Auxiliary torque enable input from PLC	Fails Low	Motor control module will not send current through armature of motor to prove torque. PLC will disable hoist for torque proving failure.	No effect.	3
			Fails High	Motor control module will continue to use Aux. current reference to run motor. Delta Tau motion controller will detect following error and signal PLC to disable drives and set brakes.	No effect.	3
AESRA	Scaling Resistor Assembly	Scale voltage from fault resistors to conform to AEFSA circuitry	Fails Open	No effect. Power to this component and the East drive has been removed by opening AECB and will not affect operation of the hoist until the East drive is repaired and switched back on line.	No effect.	3
			Fails Shorted	No effect. Power to this component and the East drive has been removed by opening AECB and will not affect operation of the hoist until the East drive is repaired and switched back on line.	No effect.	3

Table 21. **Electrical FMEA - Auxiliary Hoist Backup Mode**

System/Subsystem: 325 Ton Bridge Cranes at the Vehicle Assembly Building High Bays 1/2/3/4 / Auxiliary Hoist
PMN: H72-1200-01, -02
Drawing No.: Eb-2508
Reference Figure: None

Find No. Part No.	Part Name	Part Function	a. Failure Mode b. Cause c. FMN d. Detection Method e. Correcting Action f. Time to Effect g. Timeframe	Failure Effect On System Performance	Failure Effect On Vehicle Systems And/Or Personnel Safety	Crit Cat
AEFSA	Auxiliary Hoist East Fault Sense Assembly	Monitor Auxiliary Hoist East motor control module current balance, disabling AEMCM if imbalance occurs				
	J1-6	Provide ground for relays AERDY and AEFRDY	Fails High	No effect. Power to this component and the East drive has been removed by opening AECB and will not affect operation of the hoist until the East drive is repaired and switched back on line.	No effect.	3
			Fails Low	No effect. Power to this component and the East drive has been removed by opening AECB and will not affect operation of the hoist until the East drive is repaired and switched back on line.	No effect.	3
	J2-12	Provide enable signal for AEMCM	Fails High	No effect. Power to this component and the East drive has been removed by opening AECB and will not affect operation of the hoist until the East drive is repaired and switched back on line.	No effect.	3
			Fails Low	No effect. Power to this component and the East drive has been removed by opening AECB and will not affect operation of the hoist until the East drive is repaired and switched back on line.	No effect.	3

Table 21. **Electrical FMEA - Auxiliary Hoist Backup Mode**

System/Subsystem: 325 Ton Bridge Cranes at the Vehicle Assembly Building High Bays 1/2/3/4 / Auxiliary Hoist
PMN: H72-1200-01, -02
Drawing No.: Eb-2508
Reference Figure: None

Find No. Part No.	Part Name	Part Function	a. Failure Mode b. Cause c. FMN d. Detection Method e. Correcting Action f. Time to Effect g. Timeframe	Failure Effect On System Performance	Failure Effect On Vehicle Systems And/Or Personnel Safety	Crit Cat
	J2-5	Provide power for sensing contacts of relay AEDC	Fails Low or No Output	No effect. Power to this component and the East drive has been removed by opening AECB and will not affect operation of the hoist until the East drive is repaired and switched back on line.	No effect.	3
			Fails High	No effect. Power to this component and the East drive has been removed by opening AECB and will not affect operation of the hoist until the East drive is repaired and switched back on line.	No effect.	3
	J2-6	Input from sensing contacts of relay AEDC.	Fails Low	No effect. Power to this component and the East drive has been removed by opening AECB and will not affect operation of the hoist until the East drive is repaired and switched back on line.	No effect.	3
			Fails High	No effect. Power to this component and the East drive has been removed by opening AECB and will not affect operation of the hoist until the East drive is repaired and switched back on line.	No effect.	3
AERDY	Relay	Energizes when AEMCM is ready and AEFSA J1-6 goes low	Fails De-energized	No effect. Power to this component and the East drive has been removed by opening AECB and will not affect operation of the hoist until the East drive is repaired and switched back on line.	No effect.	3

Table 21. **Electrical FMEA - Auxiliary Hoist Backup Mode**

System/Subsystem: 325 Ton Bridge Cranes at the Vehicle Assembly Building High Bays 1/2/3/4 / Auxiliary Hoist
PMN: H72-1200-01, -02
Drawing No.: Eb-2508
Reference Figure: None

Find No. Part No.	Part Name	Part Function	a. Failure Mode b. Cause c. FMN d. Detection Method e. Correcting Action f. Time to Effect g. Timeframe	Failure Effect On System Performance	Failure Effect On Vehicle Systems And/Or Personnel Safety	Crit Cat
			Fails Energized	No effect. Power to this component and the East drive has been removed by opening AECB and will not affect operation of the hoist until the East drive is repaired and switched back on line.	No effect.	3
	Contact	Closes to energize relay AEDE	Fails Open	No effect. Power to this component and the East drive has been removed by opening AECB and will not affect operation of the hoist until the East drive is repaired and switched back on line.	No effect.	3
			Fails Closed	No effect. Power to this component and the East drive has been removed by opening AECB and will not affect operation of the hoist until the East drive is repaired and switched back on line.	No effect.	3
O:0,5,02	PLC Output	Analog input to AEMCM to set current for torque proving	Fails High	No effect. Power to this component and the East drive has been removed by opening AECB and will not affect operation of the hoist until the East drive is repaired and switched back on line.	No effect.	3
			Fails Low or No Output	No effect. Power to this component and the East drive has been removed by opening AECB and will not affect operation of the hoist until the East drive is repaired and switched back on line.	No effect.	3

Table 21. **Electrical FMEA - Auxiliary Hoist Backup Mode**

System/Subsystem: 325 Ton Bridge Cranes at the Vehicle Assembly Building High Bays 1/2/3/4 / Auxiliary Hoist
PMN: H72-1200-01, -02
Drawing No.: Eb-2508
Reference Figure: None

Find No. Part No.	Part Name	Part Function	a. Failure Mode b. Cause c. FMN d. Detection Method e. Correcting Action f. Time to Effect g. Timeframe	Failure Effect On System Performance	Failure Effect On Vehicle Systems And/Or Personnel Safety	Crit Cat
None	Resistor 20K Ohms	Prevent PLC output from “floating” when an output is not being provided by the PLC	Fails Open	No effect. Power to this component and the East drive has been removed by opening AECB and will not affect operation of the hoist until the East drive is repaired and switched back on line.	No effect.	3
			Fails Shorted	No effect. Power to this component and the East drive has been removed by opening AECB and will not affect operation of the hoist until the East drive is repaired and switched back on line.	No effect.	3
AEFLT	Auxiliary Hoist East Fault relay	Energizes when AEMCM J1-20 goes low, signaling AEMCM has a fault	Fails De-energized	No effect. Power to this component and the East drive has been removed by opening AECB and will not affect operation of the hoist until the East drive is repaired and switched back on line.	No effect.	3
			Fails Energized	No effect. Power to this component and the East drive has been removed by opening AECB and will not affect operation of the hoist until the East drive is repaired and switched back on line.	No effect.	3
	Contact	Closes to energize relay AEDE	Fails Open	No effect. Power to this component and the East drive has been removed by opening AECB and will not affect operation of the hoist until the East drive is repaired and switched back on line.	No effect.	3

Table 21. **Electrical FMEA - Auxiliary Hoist Backup Mode**

System/Subsystem: 325 Ton Bridge Cranes at the Vehicle Assembly Building High Bays 1/2/3/4 / Auxiliary Hoist
PMN: H72-1200-01, -02
Drawing No.: Eb-2508
Reference Figure: None

Find No. Part No.	Part Name	Part Function	a. Failure Mode b. Cause c. FMN d. Detection Method e. Correcting Action f. Time to Effect g. Timeframe	Failure Effect On System Performance	Failure Effect On Vehicle Systems And/Or Personnel Safety	Crit Cat
			Fails Closed	No effect. Power to this component and the East drive has been removed by opening AECB and will not affect operation of the hoist until the East drive is repaired and switched back on line.	No effect.	3
O:1,5,B3	PLC Output	Energizes input J2-6, RUN, of AEMCM	Fails De-energized	No effect. Power to this component and the East drive has been removed by opening AECB and will not affect operation of the hoist until the East drive is repaired and switched back on line.	No effect.	3
			Fails Energized	No effect. Power to this component and the East drive has been removed by opening AECB and will not affect operation of the hoist until the East drive is repaired and switched back on line.	No effect.	3
O:1,5,B4	PLC Output	Energizes input J2-8, Aux. torque enable, of AEMCM for torque proving	Fails De-energized	No effect. Power to this component and the East drive has been removed by opening AECB and will not affect operation of the hoist until the East drive is repaired and switched back on line.	No effect.	3
			Fails Energized	No effect. Power to this component and the East drive has been removed by opening AECB and will not affect operation of the hoist until the East drive is repaired and switched back on line.	No effect.	3

Table 21. **Electrical FMEA - Auxiliary Hoist Backup Mode**

System/Subsystem: 325 Ton Bridge Cranes at the Vehicle Assembly Building High Bays 1/2/3/4 / Auxiliary Hoist
PMN: H72-1200-01, -02
Drawing No.: Eb-2508
Reference Figure: None

Find No. Part No.	Part Name	Part Function	a. Failure Mode b. Cause c. FMN d. Detection Method e. Correcting Action f. Time to Effect g. Timeframe	Failure Effect On System Performance	Failure Effect On Vehicle Systems And/Or Personnel Safety	Crit Cat
I:1,4,C2	PLC Input	De-energizes when East SCR overtemp sensor contacts open	Fails De-energized	No effect. Power to this component and the East drive has been removed by opening AECB and will not affect operation of the hoist until the East drive is repaired and switched back on line.	No effect.	3
			Fails Energized	No effect. Power to this component and the East drive has been removed by opening AECB and will not affect operation of the hoist until the East drive is repaired and switched back on line.	No effect.	3
ESCR OT	East SCR Over Temperature Sensor	Contact opens when temperature of East SCRs exceeds a set value	Fails Open	No effect. Power to this component and the East drive has been removed by opening AECB and will not affect operation of the hoist until the East drive is repaired and switched back on line.	No effect.	3
			Fails Closed	No effect. Power to this component and the East drive has been removed by opening AECB and will not affect operation of the hoist until the East drive is repaired and switched back on line.	No effect.	3
AEMC (continued)	Auxiliary Hoist East Motor Control Module	Provides primary armature and field control of Auxiliary Hoist East motor				

Table 21. **Electrical FMEA - Auxiliary Hoist Backup Mode**

System/Subsystem: 325 Ton Bridge Cranes at the Vehicle Assembly Building High Bays 1/2/3/4 / Auxiliary Hoist
PMN: H72-1200-01, -02
Drawing No.: Eb-2508
Reference Figure: None

Find No. Part No.	Part Name	Part Function	a. Failure Mode b. Cause c. FMN d. Detection Method e. Correcting Action f. Time to Effect g. Timeframe	Failure Effect On System Performance	Failure Effect On Vehicle Systems And/Or Personnel Safety	Crit Cat
	J1-8,9	DC Current reference input from Delta Tau Motion Controller	Fails Low	No effect. Power to this component and the East drive has been removed by opening AECB and will not affect operation of the hoist until the East drive is repaired and switched back on line.	No effect.	3
			Fails High	No effect. Power to this component and the East drive has been removed by opening AECB and will not affect operation of the hoist until the East drive is repaired and switched back on line.	No effect.	3
	J1-12	Auxiliary Current Reference input from PLC	Fails High	No effect. Power to this component and the East drive has been removed by opening AECB and will not affect operation of the hoist until the East drive is repaired and switched back on line.	No effect.	3
			Fails Low or No Output	No effect. Power to this component and the East drive has been removed by opening AECB and will not affect operation of the hoist until the East drive is repaired and switched back on line.	No effect.	3
	J1-14	+15 Volts DC output for Auxiliary Hoist East Fault Sense Assembly	Fails Low	No effect. Power to this component and the East drive has been removed by opening AECB and will not affect operation of the hoist until the East drive is repaired and switched back on line.	No effect.	3

Table 21. **Electrical FMEA - Auxiliary Hoist Backup Mode**

System/Subsystem: 325 Ton Bridge Cranes at the Vehicle Assembly Building High Bays 1/2/3/4 / Auxiliary Hoist
PMN: H72-1200-01, -02
Drawing No.: Eb-2508
Reference Figure: None

Find No. Part No.	Part Name	Part Function	a. Failure Mode b. Cause c. FMN d. Detection Method e. Correcting Action f. Time to Effect g. Timeframe	Failure Effect On System Performance	Failure Effect On Vehicle Systems And/Or Personnel Safety	Crit Cat
			Fails High	No effect. Power to this component and the East drive has been removed by opening AECB and will not affect operation of the hoist until the East drive is repaired and switched back on line.	No effect.	3
	J1-17	-15 Volts DC output for Auxiliary Hoist East Fault Sense Assembly	Fails Low	No effect. Power to this component and the East drive has been removed by opening AECB and will not affect operation of the hoist until the East drive is repaired and switched back on line.	No effect.	3
			Fails High	No effect. Power to this component and the East drive has been removed by opening AECB and will not affect operation of the hoist until the East drive is repaired and switched back on line.	No effect.	3
	J1-20	Motor Control Fault Output	Fails Low	No effect. Power to this component and the East drive has been removed by opening AECB and will not affect operation of the hoist until the East drive is repaired and switched back on line.	No effect.	3
			Fails High	No effect. Power to this component and the East drive has been removed by opening AECB and will not affect operation of the hoist until the East drive is repaired and switched back on line.	No effect.	3

Table 21. **Electrical FMEA - Auxiliary Hoist Backup Mode**

System/Subsystem: 325 Ton Bridge Cranes at the Vehicle Assembly Building High Bays 1/2/3/4 / Auxiliary Hoist
PMN: H72-1200-01, -02
Drawing No.: Eb-2508
Reference Figure: None

Find No. Part No.	Part Name	Part Function	a. Failure Mode b. Cause c. FMN d. Detection Method e. Correcting Action f. Time to Effect g. Timeframe	Failure Effect On System Performance	Failure Effect On Vehicle Systems And/Or Personnel Safety	Crit Cat
	J2-4	Drive enable input from Fault Sense Assembly and relay AEDE	Fails Low	No effect. Power to this component and the East drive has been removed by opening AECB and will not affect operation of the hoist until the East drive is repaired and switched back on line.	No effect.	3
			Fails High	No effect. Power to this component and the East drive has been removed by opening AECB and will not affect operation of the hoist until the East drive is repaired and switched back on line.	No effect.	3
	J2-6	Drive run input from PLC	Fails Low	No effect. Power to this component and the East drive has been removed by opening AECB and will not affect operation of the hoist until the East drive is repaired and switched back on line.	No effect.	3
			Fails High	No effect. Power to this component and the East drive has been removed by opening AECB and will not affect operation of the hoist until the East drive is repaired and switched back on line.	No effect.	3
	J2-8	Auxiliary torque enable input from PLC	Fails Low	No effect. Power to this component and the East drive has been removed by opening AECB and will not affect operation of the hoist until the East drive is repaired and switched back on line.	No effect.	3

Table 21. **Electrical FMEA - Auxiliary Hoist Backup Mode**

System/Subsystem: 325 Ton Bridge Cranes at the Vehicle Assembly Building High Bays 1/2/3/4 / Auxiliary Hoist
PMN: H72-1200-01, -02
Drawing No.: Eb-2508
Reference Figure: None

Find No. Part No.	Part Name	Part Function	a. Failure Mode b. Cause c. FMN d. Detection Method e. Correcting Action f. Time to Effect g. Timeframe	Failure Effect On System Performance	Failure Effect On Vehicle Systems And/Or Personnel Safety	Crit Cat
			Fails Energized	No effect. Power to this component and the East drive has been removed by opening AECB and will not affect operation of the hoist until the East drive is repaired and switched back on line.	No effect.	3
	J2-11	External Fault Input from ESCR OT sensor	Fails Low	No effect. Power to this component and the East drive has been removed by opening AECB and will not affect operation of the hoist until the East drive is repaired and switched back on line.	No effect.	3
			Fails Closed	No effect. Power to this component and the East drive has been removed by opening AECB and will not affect operation of the hoist until the East drive is repaired and switched back on line.	No effect.	3
	J2-15	Ready relay output to relay AERDY	Fails Low	No effect. Power to this component and the East drive has been removed by opening AECB and will not affect operation of the hoist until the East drive is repaired and switched back on line.	No effect.	3
			Fails High	No effect. Power to this component and the East drive has been removed by opening AECB and will not affect operation of the hoist until the East drive is repaired and switched back on line.	No effect.	3

Table 21. **Electrical FMEA - Auxiliary Hoist Backup Mode**

System/Subsystem: 325 Ton Bridge Cranes at the Vehicle Assembly Building High Bays 1/2/3/4 / Auxiliary Hoist
PMN: H72-1200-01, -02
Drawing No.: Eb-2508
Reference Figure: None

Find No. Part No.	Part Name	Part Function	a. Failure Mode b. Cause c. FMN d. Detection Method e. Correcting Action f. Time to Effect g. Timeframe	Failure Effect On System Performance	Failure Effect On Vehicle Systems And/Or Personnel Safety	Crit Cat
	J2-18	+25 volts DC output to Fault Sense Assembly, relay AEFLT and ESCR OT switch	Fails Low	No effect. Power to this component and the East drive has been removed by opening AECB and will not affect operation of the hoist until the East drive is repaired and switched back on line.	No effect.	3
			Fails High	Possible damage to fault sense assembly or cause motor control module to malfunction. PLC will detect fault, disable drive, and set brakes.	No effect.	3

Electrical FMEA, Trolley

Wire harnesses, cables, or connectors were not analyzed in the Electrical FMEA for this system since a single failure (open or short) could not result in the loss of life or vehicle. (Ref. NSTS 22206, Paragraph 4.4.1.b.2)

This FMEA section references Ederer drawing EB-2508, specifically the following sheets:

Sheet	Title
34	Trolley Primary Motor Control Elementary
35	Trolley Secondary Motor Control Elementary
36	Trolley Control Elementary
37	Trolley Control Elementary
38	Trolley Control Elementary
39	Main Hoist Control Elementary
40	Trolley Primary Motor Control Electronics Elementary
41	Trolley Secondary Motor Control Electronics Elementary
42	Trolley Positioning

Table 22. **Electrical FMEA - Trolley**

System/Subsystem: 325 Ton Bridge Cranes at the Vehicle Assembly Building High Bays 1/2/3/4 / Trolley
PMN: H72-1200-01, -02
Drawing No.: EB-2508
Reference Figure: None

Find No. Part No.	Part Name	Part Function	a. Failure Mode b. Cause c. FMN d. Detection Method e. Correcting Action f. Time to Effect g. Timeframe	Failure Effect On System Performance	Failure Effect On Vehicle Systems And/Or Personnel Safety	Crit Cat
TPCB	Circuit Breaker	Protects circuitry from overloads in Trolley primary drive circuit	Premature operation	Loss of power to Trolley primary motor control module. Relays TPRDY and TPFLT will de-energize. PLC will detect drive not enabled and set brakes.	No effect.	3
			Fails to operate	Overload will cause imbalance between power phases. TPFSA will detect imbalance and disable drive. PLC will set brakes. Requires previous failure to cause overload	No effect.	3
TPIT	Isolation Transformer	Isolates primary drive circuit to reduce electrical noise and interference	Fails open	Loss of one or more power phases. TPFSA will detect imbalance and disable drive. PLC will set brakes.	No effect.	3
			Fails shorted	Overload will trip TPCB. Drive will be disabled and brakes will be set	No effect.	3
TPFU1, TPFU2, TPFU3, TPFU4, TPFU5, TPFU6,	Fuse	Protects circuitry from overloads in Trolley motor blower circuit	Premature operation	Loss of two out of three power phases to blower motor. Associated blower motor will run inefficiently or stop. If Trolley motor starts to overheat, overheat warning light will come on in cab. If motor does overheat, Trolley motor overheat shutdown will occur, drive will be disabled and brakes will be set.	No effect.	3
			Fails to operate	Associated fuse in current loop will protect against overloads. Requires previous failure to cause overload.	No effect.	3

Table 22. **Electrical FMEA - Trolley**

System/Subsystem: 325 Ton Bridge Cranes at the Vehicle Assembly Building High Bays 1/2/3/4 / Trolley
PMN: H72-1200-01, -02
Drawing No.: EB-2508
Reference Figure: None

Find No. Part No.	Part Name	Part Function	a. Failure Mode b. Cause c. FMN d. Detection Method e. Correcting Action f. Time to Effect g. Timeframe	Failure Effect On System Performance	Failure Effect On Vehicle Systems And/Or Personnel Safety	Crit Cat
TWBOL, TEBOL,	Overload switch	Switch contact opens when excessive current is detected in Trolley motor blower circuit	Premature operation	TWBOL contact will open and de-energize PLC input. PLC will set bit 15 in error word %R00105. PLC will disable Trolley drive and set brakes.	No effect.	3
			Fails to operate	TPFU1-6 will protect against overload. Trolley drive will continue to operate. Motor overtemp sensors will detect if Trolley motor overheats. Requires previous failure to cause overload.	No effect.	3
	Contact	Opens to de-energize PLC input	Fails open	PLC will not be energized. PLC will set bit 15 in error word %R00105. PLC will disable Trolley drive and set brakes.	No effect.	3
			Fails closed	PLC input will not de-energize when excessive current is running through Trolley west motor blower. TPFU1-6 will protect against overload. Trolley drive will continue to operate. Motor overtemp sensors will detect if Trolley motor overheats. Requires previous failure to cause overload.	No effect.	3
None	Trolley East and West blower motor	Provide cooling air flow for Trolley motor	Fails open	Loss of cooling air through Trolley motor. Motor overtemp sensors will disable Trolley drive if Trolley motor overheats.	No effect.	3

Table 22. **Electrical FMEA - Trolley**

System/Subsystem: 325 Ton Bridge Cranes at the Vehicle Assembly Building High Bays 1/2/3/4 / Trolley
PMN: H72-1200-01, -02
Drawing No.: EB-2508
Reference Figure: None

Find No. Part No.	Part Name	Part Function	a. Failure Mode b. Cause c. FMN d. Detection Method e. Correcting Action f. Time to Effect g. Timeframe	Failure Effect On System Performance	Failure Effect On Vehicle Systems And/Or Personnel Safety	Crit Cat
			Fails shorted	Current overload either will trip blower overload switch or blow TPFU1-6. Blower overload trip will be detected by PLC, which will disable drive and set brakes. Loss of TPFU1-6 will cause loss of cooling air through Trolley motor. Motor overtemp sensors will disable Trolley drive if motor overheats.	No effect.	3
None	Resistor (6 each)	Provides voltage input for fault sense assembly	Fails open	Voltage imbalance will be detected by TPFSA. TPFSA will disable drive and set brakes. Delta Tau motion control board servoing will ensure motor operates at commanded speed.	No effect.	3
			Fails shorted	Voltage imbalance will be detected by TPFSA. TPFSA will disable drive and set brakes. Delta Tau motion control board servoing will ensure motor operates at commanded speed.	No effect.	3
None	Tachometer	Generates voltage proportional to rotational speed of West Trolley motor	Fails low or no output	PLC will detect mismatch between encoder and tachometer feedback. PLC will disable Trolley drive and set brakes.	No effect.	3
			Fails high output	PLC will detect mismatch between encoder and tachometer feedback. PLC will disable Trolley drive and set brakes.	No effect.	3

Table 22. **Electrical FMEA - Trolley**

System/Subsystem: 325 Ton Bridge Cranes at the Vehicle Assembly Building High Bays 1/2/3/4 / Trolley
PMN: H72-1200-01, -02
Drawing No.: EB-2508
Reference Figure: None

Find No. Part No.	Part Name	Part Function	a. Failure Mode b. Cause c. FMN d. Detection Method e. Correcting Action f. Time to Effect g. Timeframe	Failure Effect On System Performance	Failure Effect On Vehicle Systems And/Or Personnel Safety	Crit Cat
TTR1	Resistor	Provide tachometer voltage scaling for PLC input	Fails open	Loss of tachometer feedback to PLC. PLC will detect mismatch between encoder and tachometer feedback. PLC will disable Trolley drive and set brakes.	No effect.	3
			Fails shorted	Tachometer feedback will not be scaled down for PLC input. PLC will detect mismatch between encoder and tachometer feedback. PLC will disable Trolley drive and set brakes	No effect.	3
TTR2	Resistor	Provide tachometer voltage scaling for PLC input	Fails open	Tachometer feedback will not be scaled down for PLC input. PLC will detect mismatch between encoder and tachometer feedback. PLC will disable Trolley drive and set brakes.	No effect.	3
			Fails shorted	Loss of tachometer feedback to PLC. PLC will detect mismatch between encoder and tachometer feedback. PLC will disable Trolley drive and set brakes.	No effect.	3
I:2,7,15	PLC input	Provides interface for tachometer feedback voltage into PLC	Fails low or no input	Loss of tachometer feedback to PLC. PLC will detect mismatch between encoder and tachometer feedback. PLC will disable Trolley drive and set brakes.	No effect.	3
			Fails high input	PLC will detect mismatch between encoder and tachometer feedback. PLC will disable Trolley drive and set brakes.	No effect.	3

Table 22. **Electrical FMEA - Trolley**

System/Subsystem: 325 Ton Bridge Cranes at the Vehicle Assembly Building High Bays 1/2/3/4 / Trolley
PMN: H72-1200-01, -02
Drawing No.: EB-2508
Reference Figure: None

Find No. Part No.	Part Name	Part Function	a. Failure Mode b. Cause c. FMN d. Detection Method e. Correcting Action f. Time to Effect g. Timeframe	Failure Effect On System Performance	Failure Effect On Vehicle Systems And/Or Personnel Safety	Crit Cat
TPMCM	Trolley primary motor control module	Provides primary armature and field control of both Trolley motors	Fails low or no output	Motor speed will be slower than commanded. Delta Tau motion control board will detect following error, drive will be disabled and brakes will be set.	No effect.	3
	Armature current outputs, A1, A2	Provides current for Trolley motor armature windings	Fails high output	Motor speed will be higher than commanded. Delta Tau motion control board will detect following error, drive will be disabled and brakes will be set.	No effect.	3
	Field current outputs, F1, F2	Provides current for Trolley motor field windings	Fails low or no output	Delta Tau control board will attempt to servo Trolley motors to commanded speed. If motors do not reach or maintain commanded speed, Delta Tau motion control board will detect following error, drive will be disabled and brakes will be set	No effect.	3
			Fails high output	Delta Tau control board will attempt to servo Trolley motors to commanded speed. If motors do not reach or maintain commanded speed, Delta Tau motion control board will detect following error, drive will be disabled and brakes will be set.	No effect.	3
TWOL, TEOL	Overload Switch	Contact opens when excessive current is detected in motor armature loop	Prematurely operates	PLC input will de-energize. PLC will disable drive and set Brake.	No effect.	3

Table 22. **Electrical FMEA - Trolley**

System/Subsystem: 325 Ton Bridge Cranes at the Vehicle Assembly Building High Bays 1/2/3/4 / Trolley
PMN: H72-1200-01, -02
Drawing No.: EB-2508
Reference Figure: None

Find No. Part No.	Part Name	Part Function	a. Failure Mode b. Cause c. FMN d. Detection Method e. Correcting Action f. Time to Effect g. Timeframe	Failure Effect On System Performance	Failure Effect On Vehicle Systems And/Or Personnel Safety	Crit Cat
			Fails to operate	Excessive current can flow through associated motor. Motor will overheat, motor overload sensors will detect condition and disable drive. Delta Tau will continue to servo motor to commanded speed. If speed does not match speed commanded, Delta Tau will disable drive and set brakes.	No effect.	3
	Contact, normally closed	De-energize PLC input when overload switch detects excessive current in motor armature loop	Fails open	PLC input will remain de-energized. PLC will disable drive and set Brake.	No effect.	3
			Fails closed	Excessive current can flow through associated motor. Motor will overheat, motor overload sensors will detect condition and disable drive. Delta Tau will continue to servo motor to commanded speed. If speed does not match speed commanded, Delta Tau will disable drive and set brakes.	No effect.	3
None	Ammeter	Indicates amount of current flowing in motor armature loop	Fails open	CAB ammeter will indicated zero current for one Trolley motor. Trolley will not operate normally.	No effect.	3
			Fails shorted	Excessive current will flow through ammeter windings resulting in windings burning open. See above	No effect.	3

Table 22. **Electrical FMEA - Trolley**

System/Subsystem: 325 Ton Bridge Cranes at the Vehicle Assembly Building High Bays 1/2/3/4 / Trolley
PMN: H72-1200-01, -02
Drawing No.: EB-2508
Reference Figure: None

Find No. Part No.	Part Name	Part Function	a. Failure Mode b. Cause c. FMN d. Detection Method e. Correcting Action f. Time to Effect g. Timeframe	Failure Effect On System Performance	Failure Effect On Vehicle Systems And/Or Personnel Safety	Crit Cat
TAR1, TAR2	Resistor	Provide resistance for balancing trolley motor speeds	Fails open	Loss of current path for one Trolley motor. Trolley drive will continue to run on the remaining motor. Higher current through remaining motor will trip current overload switch.	No effect.	3
			Fails shorted	Higher current will flow through one Trolley motor than the other. Trolley motor with higher current will trip overload switch or will over heat which will be detected by motor overheat sensors. Drive will be disabled if overheat occurs.	No effect.	3
None	Trolley motor, East, West	Provide torque to mechanical drive system to move trolley				
	Armature windings	Provides torque to rotate motor output shaft	Fails open	Loss of current path for one Trolley motor. Trolley drive will continue to run on the remaining motor. Higher current through remaining motor will trip current overload switch or cause motor to overheat	No effect.	3
			Fails shorted	Excessive current will flow through shorted motor. TPMCM will detect instantaneous overcurrent, disabling drive and setting brakes. Excessive current will trip overload switch, disabling drive or Delta Tau motion control board will detect following error.	No effect.	3

Table 22. **Electrical FMEA - Trolley**

System/Subsystem: 325 Ton Bridge Cranes at the Vehicle Assembly Building High Bays 1/2/3/4 / Trolley
PMN: H72-1200-01, -02
Drawing No.: EB-2508
Reference Figure: None

Find No. Part No.	Part Name	Part Function	a. Failure Mode b. Cause c. FMN d. Detection Method e. Correcting Action f. Time to Effect g. Timeframe	Failure Effect On System Performance	Failure Effect On Vehicle Systems And/Or Personnel Safety	Crit Cat
	Field windings	Provides static magnetic field for armature magnetic field to work against	Fails closed	Loss of torque from one trolley motor. Trolley drive will continue to run on the remaining motor. Higher current through remaining motor will trip current overload switch or cause motor to overheat.	No effect.	3
			Fails shorted	Excessive current will flow through remaining field winding of one motor creating a torque imbalance between the two motors. Trolley drive will continue to run, motor imbalance will trip overload or TPMCM will detect field over-current fault, disabling drive and setting brakes.	No effect.	3
None	Switch, primary-secondary	Switches motor connections between primary MCM and secondary MCM	Fails open	Current path for field windings will not be complete. TPMCM will fault on field current loss. Motors will not develop torque. Delta Tau will develop following error, Trolley drive will be disabled and brakes will be set.	No effect.	3
			Fails closed	No effect. Failure of single contact will not complete a circuit path.	No effect.	3

Table 22. **Electrical FMEA - Trolley**

System/Subsystem: 325 Ton Bridge Cranes at the Vehicle Assembly Building High Bays 1/2/3/4 / Trolley
PMN: H72-1200-01, -02
Drawing No.: EB-2508
Reference Figure: None

Find No. Part No.	Part Name	Part Function	a. Failure Mode b. Cause c. FMN d. Detection Method e. Correcting Action f. Time to Effect g. Timeframe	Failure Effect On System Performance	Failure Effect On Vehicle Systems And/Or Personnel Safety	Crit Cat
TFR1	Trolley field resistor	Provides adjustment to balance current flows through each Trolley motors field windings	Fails open	Loss of torque from one trolley motor. Trolley drive will continue to run on the remaining motor. Higher current through remaining motor will trip current overload switch or cause motor to overheat or current path for field windings will not be complete. TPMCM will fault on field current loss. Motors will not develop torque. Delta Tau will develop following error, Trolley drive will be disabled and brakes will be set.	No effect.	3
			Fails shorted	No effect. Failure of single contact will not complete a circuit path.	No effect.	3
TSCB	Circuit Breaker	Protects circuitry from overloads in trolley secondary drive circuit.	Premature operation	Loss of power to Trolley secondary motor control module. Relays TSRDY and TSFLT will de-energize, PLC will detect drive not enabled and disable brakes.	No effect.	3
			Fails to operate	Overload will cause imbalance between power phases. TSFSA will detect imbalance and disable drive. PLC will set brakes. Requires previous failure to cause overload.	No effect.	3
TSIT	Isolation transformer	Isolates secondary drive circuit to reduce electrical noise and interference.	Fails open	Loss of one or more power phases. TSFSA will detect imbalance and disable drive. PLC will set brakes.	No effect.	3
			Fails shorted	Overload will trip TSCB. Drive will be disabled and brakes will be set.	No effect.	3

Table 22. **Electrical FMEA - Trolley**

System/Subsystem: 325 Ton Bridge Cranes at the Vehicle Assembly Building High Bays 1/2/3/4 / Trolley
PMN: H72-1200-01, -02
Drawing No.: EB-2508
Reference Figure: None

Find No. Part No.	Part Name	Part Function	a. Failure Mode b. Cause c. FMN d. Detection Method e. Correcting Action f. Time to Effect g. Timeframe	Failure Effect On System Performance	Failure Effect On Vehicle Systems And/Or Personnel Safety	Crit Cat
TSFU1, TSFU2, TSFU3, TSFU4, TSFU5, TSFU6,	Fuse	Protects circuitry from overloads in Trolley motor blower circuit	Premature operation	Loss of two out of three power phases to blower motor. Associated blower motor will run inefficiently or stop. If Trolley motor starts to overheat, overheat warning light will come on in cab. If motor does overheat, Trolley motor overheat shutdown will occur, drive will be disabled and brakes will be set.	No effect.	3
			Fails to operate	Associated fuse in current loop will protect against overloads. Requires previous failure to cause overload	No effect.	3
ED-1941	Resistor	Provide voltage input for fault sense assembly	Fails open	Voltage imbalance will be detected by TSFSA. TSFSA will disable drive and set brakes. Delta Tau motion control board servoing will ensure motor operates at commanded speed.	No effect.	3
			Fails shorted	Voltage imbalance will be detected by TSFSA. TSFSA will disable drive and set brakes. Delta Tau motion control board servoing will ensure motor operates at commanded speed.	No effect.	3
None	Tachometer	Generates voltage proportional to rotational speed of East Trolley motor	Fails low or no output	Loss of TSMCM overspeed protection. PLC will provide overspeed protection. Requires previous failures to cause overspeed condition.	No effect.	3

Table 22. **Electrical FMEA - Trolley**

System/Subsystem: 325 Ton Bridge Cranes at the Vehicle Assembly Building High Bays 1/2/3/4 / Trolley
PMN: H72-1200-01, -02
Drawing No.: EB-2508
Reference Figure: None

Find No. Part No.	Part Name	Part Function	a. Failure Mode b. Cause c. FMN d. Detection Method e. Correcting Action f. Time to Effect g. Timeframe	Failure Effect On System Performance	Failure Effect On Vehicle Systems And/Or Personnel Safety	Crit Cat
			Fails high output	TSMCM will trip off for overspeed condition that does not exist.	No effect.	3
TSMCM	Trolley secondary motor control module	Provides secondary armature and field control of both Trolley motors				
	Armature current outputs, A1, A2	Provides Current for Trolley motor armature windings	Fails low or no output	Motor speed will be slower than commanded. Delta Tau motion control board will detect following error, drive will be disabled and brakes will be set.	No effect.	3
			Fails high output	Motor speed will be higher than commanded. Delta Tau motion control board will detect following error, drive will be disabled and brakes will be set.	No effect.	3
	Field current outputs, F1, F2	Provides current for Trolley motor field windings	Fails low or no output	Delta Tau motion control board will attempt to servo Trolley motors to commanded speed. If motors do not reach or maintain commanded speed, Delta Tau motion control board will detect following error, drive will be disabled and brakes will be set.	No effect.	3

Table 22. **Electrical FMEA - Trolley**

System/Subsystem: 325 Ton Bridge Cranes at the Vehicle Assembly Building High Bays 1/2/3/4 / Trolley
PMN: H72-1200-01, -02
Drawing No.: EB-2508
Reference Figure: None

Find No. Part No.	Part Name	Part Function	a. Failure Mode b. Cause c. FMN d. Detection Method e. Correcting Action f. Time to Effect g. Timeframe	Failure Effect On System Performance	Failure Effect On Vehicle Systems And/Or Personnel Safety	Crit Cat
			Fails high output	Delta Tau motion control board will attempt to servo Trolley motors to commanded speed. If motors do not reach or maintain commanded speed, Delta Tau motion control board will detect following error, drive will be disabled and brakes will be set.	No effect.	3
None	Switch	Contacts close to energize PLC inputs to select speed range	Fails open (single contact)	Trolley will operate in slow speed. PLC software requires all four PLC inputs work properly to enable fast speed. Speed defaults to slow range.	No effect.	3
			Fails closed (single contact)	Trolley will operate in slow speed. PLC software requires all four PLC inputs work properly to enable fast speed. Speed defaults to slow range.	No effect.	3
GI:07,IN12	PLC input	Energizes when fast speed range is selected	Fails de-energized	Trolley will operate in slow speed. PLC software requires all four PLC inputs work properly to enable fast speed. Speed defaults to slow range.	No effect.	3
			Fails energized	Trolley will operate in slow speed. PLC software requires all four PLC inputs work properly to enable fast speed. Speed defaults to slow range.	No effect.	3

Table 22. **Electrical FMEA - Trolley**

System/Subsystem: 325 Ton Bridge Cranes at the Vehicle Assembly Building High Bays 1/2/3/4 / Trolley
PMN: H72-1200-01, -02
Drawing No.: EB-2508
Reference Figure: None

Find No. Part No.	Part Name	Part Function	a. Failure Mode b. Cause c. FMN d. Detection Method e. Correcting Action f. Time to Effect g. Timeframe	Failure Effect On System Performance	Failure Effect On Vehicle Systems And/Or Personnel Safety	Crit Cat
GI:08,IN12	PLC input	Energizes when fast speed range is selected	Fails de-energized	Trolley will operate in slow speed. PLC software requires all four PLC inputs work properly to enable fast speed. Speed defaults to slow range.	No effect.	3
			Fails energized	Trolley will operate in slow speed. PLC software requires all four PLC inputs work properly to enable fast speed. Speed defaults to slow range.	No effect.	3
GI:07,IN13	PLC input	Energizes when slow speed range is selected	Fails de-energized	Trolley will operate in slow speed. PLC software requires all four PLC inputs work properly to enable fast speed. Speed defaults to slow range.	No effect.	3
			Fails energized	Trolley will operate in slow speed. PLC software requires all four PLC inputs work properly to enable fast speed. Speed defaults to slow range.	No effect.	3
GI:08,IN13	PLC input	Energizes when slow speed range is selected	Fails de-energized	Trolley will operate in slow speed. PLC software requires all four PLC inputs work properly to enable fast speed. Speed defaults to slow range.	No effect.	3
			Fails energized	Trolley will operate in slow speed. PLC software requires all four PLC inputs work properly to enable fast speed. Speed defaults to slow range.	No effect.	3

Table 22. **Electrical FMEA - Trolley**

System/Subsystem: 325 Ton Bridge Cranes at the Vehicle Assembly Building High Bays 1/2/3/4 / Trolley
PMN: H72-1200-01, -02
Drawing No.: EB-2508
Reference Figure: None

Find No. Part No.	Part Name	Part Function	a. Failure Mode b. Cause c. FMN d. Detection Method e. Correcting Action f. Time to Effect g. Timeframe	Failure Effect On System Performance	Failure Effect On Vehicle Systems And/Or Personnel Safety	Crit Cat
None	Master-Switch	Provides interface from operator to command direction and speed of Trolley	* See component Breakdown below			
	* Thumbswitch	Contacts close to energize PLC inputs, commanding release of Trolley brakes	Fails open	Thumb-switch will not release Trolley brakes.	No effect.	3
			Fails closed	Trolley brakes will set when Thumb-switch is released. PLC wrong direction check will be disabled. Requires further failures to cause Trolley to operate in direction other than directed.	No effect.	3
	* North	Contacts close to energize PLC inputs, commanding North direction of travel.	Fails open (signal contact)	Trolley will not operate direction commanded. PLC requires both direction inputs to enable drive.	No effect.	3
			Fails closed (signal contact)	Loss of master-switch 0.5 volt check when master-switch is in neutral position. Requires multiple failures for master-switch to output higher than expected voltage.	No effect.	3
	* South	Contacts close to energize PLC inputs, commanding South direction of travel.	Fails open (signal contact)	Trolley will not operate in direction commanded. PLC requires both direction inputs to enable drive.	No effect.	3
			Fails closed (signal contact)	Loss of master-switch 0.5 volt check when master-switch is in neutral position. Requires multiple failures for master-switch to output higher than expected voltage.	No effect.	3

Table 22. **Electrical FMEA - Trolley**

System/Subsystem: 325 Ton Bridge Cranes at the Vehicle Assembly Building High Bays 1/2/3/4 / Trolley
PMN: H72-1200-01, -02
Drawing No.: EB-2508
Reference Figure: None

Find No. Part No.	Part Name	Part Function	a. Failure Mode b. Cause c. FMN d. Detection Method e. Correcting Action f. Time to Effect g. Timeframe	Failure Effect On System Performance	Failure Effect On Vehicle Systems And/Or Personnel Safety	Crit Cat
	* 5K potentiometer	Provides 0 to 10 volt dc signal to PLC inputs commanding speed	Fails open	Loss of speed command voltage to PLC inputs. PLC will scale speed command to minimum speed in range selected. Trolley will move in direction commanded at minimum speed when motion is commanded with the master-switch.	No effect.	3
			Fails short	Short will cause overload of power supply 10PS. Overload will cause FU15 to blow and result in a loss of power supply 10PS. Loss of voltage will be detected by 10VSAR. 10VSAR drop out control power, disabling crane and setting all brakes.	No effect.	3
GI:07,IN14	PLC input	Energizes when thumb-switch contact closes, commanding Trolley brake release	Fails de-energized	Thumb-switch will not release trolley brakes.	No effect.	3
			Fails energized	Trolley brakes will set when thumb-switch is released. PLC wrong direction check will be disabled. Requires further failure to cause Trolley to operate in direction other than commanded.	No effect.	3
GI:08,IN14	PLC input	Energizes when thumb-switch contact closes, commanding Trolley brake release	Fails de-energized	Thumb-switch will not release trolley brakes.	No effect.	3

Table 22. **Electrical FMEA - Trolley**

System/Subsystem: 325 Ton Bridge Cranes at the Vehicle Assembly Building High Bays 1/2/3/4 / Trolley
PMN: H72-1200-01, -02
Drawing No.: EB-2508
Reference Figure: None

Find No. Part No.	Part Name	Part Function	a. Failure Mode b. Cause c. FMN d. Detection Method e. Correcting Action f. Time to Effect g. Timeframe	Failure Effect On System Performance	Failure Effect On Vehicle Systems And/Or Personnel Safety	Crit Cat
			Fails energized	Trolley brakes will set when thumb-switch is released. PLC wrong direction check will be disabled. Requires further failure to cause Trolley to operate in direction other than commanded.	No effect.	3
GI:07,IN15	PLC input	Energizes when North contact closes, commanding North direction of travel	Fails de-energized	Trolley will not operate in direction commanded. PLC requires both direction inputs to enable drive.	No effect.	3
			Fails energized	Loss of master-switch 0.5 volt check when master-switch is in neutral position. Requires multiple failures for master-switch to output higher than expected voltage.	No effect.	3
GI:08,IN15	PLC input	Energizes when North contact closes, commanding North direction of travel	Fails de-energized	Trolley will not operate in direction commanded. PLC requires both direction inputs to enable drive.	No effect.	3
			Fails energized	No effect. PLC requires other north direction input to command motion and direction.	No effect.	3
GI:07,IN16	PLC input	Energizes when South contact closes, commanding South direction of travel	Fails de-energized	Trolley will not operate in direction commanded. PLC requires both direction inputs to enable drive.	No effect.	3

Table 22. **Electrical FMEA - Trolley**

System/Subsystem: 325 Ton Bridge Cranes at the Vehicle Assembly Building High Bays 1/2/3/4 / Trolley
PMN: H72-1200-01, -02
Drawing No.: EB-2508
Reference Figure: None

Find No. Part No.	Part Name	Part Function	a. Failure Mode b. Cause c. FMN d. Detection Method e. Correcting Action f. Time to Effect g. Timeframe	Failure Effect On System Performance	Failure Effect On Vehicle Systems And/Or Personnel Safety	Crit Cat
			Fails energized	Loss of master-switch 0.5 volt check when master-switch is in neutral position. Requires multiple failures for master-switch to output higher than expected voltage.	No effect.	3
GI:08,IN16	PLC input	Energizes when South contact closes, commanding South direction of travel	Fails de-energized	Trolley will not operate in direction commanded. PLC requires both direction inputs to enable drive.	No effect.	3
			Fails energized	No effect. PLC requires other south direction input to command motion and direction.	No effect.	3
GI:02,IN1	PLC input	Analog input for speed commanded	Fails low or no input	PLC will detect difference between two inputs. PLC will disable Trolley drive and set brakes.	No effect.	3
			Fails high input	PLC will detect difference between two inputs. PLC will disable Trolley drive and set brakes.	No effect.	3
GI:04,IN1	PLC input	Analog input for speed commanded	Fails low or no input	PLC will detect difference between two inputs. PLC will disable Trolley drive and set brakes.	No effect.	3
			Fails high input	PLC will detect difference between two inputs. PLC will disable Trolley drive and set brakes.	No effect.	3
I:2,4,C2	PLC input	Input de-energizes when Trolley West overload switch detects excessive current	Fails de-energized	PLC will remain de-energized. PLC will disable drive and set brakes.	No effect.	3

Table 22. **Electrical FMEA - Trolley**

System/Subsystem: 325 Ton Bridge Cranes at the Vehicle Assembly Building High Bays 1/2/3/4 / Trolley
PMN: H72-1200-01, -02
Drawing No.: EB-2508
Reference Figure: None

Find No. Part No.	Part Name	Part Function	a. Failure Mode b. Cause c. FMN d. Detection Method e. Correcting Action f. Time to Effect g. Timeframe	Failure Effect On System Performance	Failure Effect On Vehicle Systems And/Or Personnel Safety	Crit Cat
			Fails energized	Excessive current can flow through associated motor. Motor will overheat. Motor overheat sensors will detect condition and disable drive. Delta Tau will continue to servo motor to commanded speed. If speed does not match speed commanded, Delta Tau will disable drive and set brakes.	No effect.	3
I:2,4,C3	PLC input	Input de-energizes when Trolley East overload switch detects excessive current	Fails de-energized	PLC will remain de-energized. PLC will disable drive and set brakes.	No effect.	3
			Fails energized	Excessive current can flow through associated motor. Motor will overheat. Motor overheat sensors will detect condition and disable drive. Delta Tau will continue to servo motor to commanded speed. If speed does not match speed commanded, Delta Tau will disable drive and set brakes.	No effect.	3
None	Trolley North final limit switch	Switch opens when Trolley reaches North end of travel	Fails open	Trolley will not run in North direction.	No effect.	3
			Fails closed	Trolley motion can continue at slow speed North until Trolley contacts mechanical hard stops.	No effect.	3
I:2,3,C1	PLC input	Input de-energizes when trolley trips North final limit switch	Fails de-energized	Trolley will not run in North direction.	No effect.	3

Table 22. **Electrical FMEA - Trolley**

System/Subsystem: 325 Ton Bridge Cranes at the Vehicle Assembly Building High Bays 1/2/3/4 / Trolley
PMN: H72-1200-01, -02
Drawing No.: EB-2508
Reference Figure: None

Find No. Part No.	Part Name	Part Function	a. Failure Mode b. Cause c. FMN d. Detection Method e. Correcting Action f. Time to Effect g. Timeframe	Failure Effect On System Performance	Failure Effect On Vehicle Systems And/Or Personnel Safety	Crit Cat
			Fails energized	Trolley motion can continue at slow speed North until Trolley contacts mechanical hard stops.	No effect.	3
None	Trolley North slowdown limit switch	Switch opens when Trolley reaches North end of area where high speed travel is allowed	Fails open	Trolley will run North only in slow speed.	No effect.	3
			Fails closed	Trolley can continue North in fast speed range until North final limit switch is tripped, then trolley will be prevented from further travel north.	No effect.	3
I:2,5,C1	PLC input	Input de-energizes when trolley trips North slowdown limit switch	Fails de-energized	Trolley will run North only in slow speed.	No effect.	3
			Fails energized	Trolley can continue North in fast speed range until North final limit switch is tripped, then trolley will be prevented from further travel North.	No effect.	3
None	Trolley South final limit switch	Switch opens when Trolley reaches South end of travel	Fails open	Trolley will not run in South direction.	No effect.	3
			Fails closed	Trolley motion can continue at slow speed South until Trolley contacts mechanical hard stops.	No effect.	3

Table 22. **Electrical FMEA - Trolley**

System/Subsystem: 325 Ton Bridge Cranes at the Vehicle Assembly Building High Bays 1/2/3/4 / Trolley
PMN: H72-1200-01, -02
Drawing No.: EB-2508
Reference Figure: None

Find No. Part No.	Part Name	Part Function	a. Failure Mode b. Cause c. FMN d. Detection Method e. Correcting Action f. Time to Effect g. Timeframe	Failure Effect On System Performance	Failure Effect On Vehicle Systems And/Or Personnel Safety	Crit Cat
I:2,3,C2	PLC input	Input de-energizes when trolley trips South final limit switch	Fails de-energized	Trolley will not run in South direction.	No effect.	3
			Fails energized	Trolley motion can continue at slow speed South until Trolley contacts mechanical hard stops.	No effect.	3
None	Trolley South slowdown limit switch	Switch opens when Trolley reaches South end of area where high speed travel is allowed	Fails open	Trolley will run South only in slow speed.	No effect.	3
			Fails closed	Trolley can continue South in fast speed range until South final limit switch is tripped, then trolley will be prevented from further travel South.	No effect.	3
I:2,5,C2	PLC input	Input de-energizes when trolley trips South slowdown limit switch	Fails de-energized	Trolley will run South only in slow speed.	No effect.	3
			Fails energized	Trolley can continue South in fast speed range until South final limit switch is tripped, then trolley will be prevented from further travel South.	No effect.	3
TPDC	Relay	Energizes when Trolley primary drive is enabled	Fails de-energized	DC loop for trolley motors will not be closed and TPFSA will not enable TPMCM. Trolley primary drive will not operate.	No effect.	3
			Fails energized	Trolley DC motor loop will remain closed. PLC will control TPMCM and brakes. Trolley will operate normally.	No effect.	3

Table 22. **Electrical FMEA - Trolley**

System/Subsystem: 325 Ton Bridge Cranes at the Vehicle Assembly Building High Bays 1/2/3/4 / Trolley
PMN: H72-1200-01, -02
Drawing No.: EB-2508
Reference Figure: None

Find No. Part No.	Part Name	Part Function	a. Failure Mode b. Cause c. FMN d. Detection Method e. Correcting Action f. Time to Effect g. Timeframe	Failure Effect On System Performance	Failure Effect On Vehicle Systems And/Or Personnel Safety	Crit Cat
	Contacts	Close to complete Trolley primary armature current loop	Fails open	Trolley DC motor loop will not be closed. Trolley will not run.	No effect.	3
			Fails closed	No effect. Will not complete a circuit.	No effect.	3
	Contact	Close to enable Trolley primary fault sense assembly	Fails open	TPFSA will not enable TPMCM. Trolley will not run.	No effect.	3
			Fails closed	Relay TPDE will disable TPMCM and other TPDC contact will interrupt Trolley motor DC current loop. Trolley will not operate normally.	No effect.	3
TSDC	Relay	Energizes when Trolley secondary drive is enabled	Fails de-energized	DC loop for trolley motors will not be closed and TSFSA will not enable TSMCM. Trolley secondary drive will not operate.	No effect.	3
			Fails energized	Trolley DC motor loop will remain closed. PLC will control TSMCM and brakes. Trolley will operate normally.	No effect.	3
	Contacts	Close to complete Trolley secondary armature current loop	Fails open	Trolley DC motor loop will not be closed. Trolley will not run.	No effect.	3
			Fails closed	No effect. Will not complete a circuit.	No effect.	3

Table 22. **Electrical FMEA - Trolley**

System/Subsystem: 325 Ton Bridge Cranes at the Vehicle Assembly Building High Bays 1/2/3/4 / Trolley
PMN: H72-1200-01, -02
Drawing No.: EB-2508
Reference Figure: None

Find No. Part No.	Part Name	Part Function	a. Failure Mode b. Cause c. FMN d. Detection Method e. Correcting Action f. Time to Effect g. Timeframe	Failure Effect On System Performance	Failure Effect On Vehicle Systems And/Or Personnel Safety	Crit Cat
	Contact	Close to enable Trolley secondary fault sense assembly	Fails open	TSFSA will not enable TSMCM. Trolley will not run.	No effect.	3
			Fails closed	Relay TSDE will disable TPMCM and other TSDC contact will interrupt Trolley motor DC current loop. Trolley will operate normally.	No effect.	3
None	Switch	Controls PLC input to select primary or secondary drive	Fails open	PLC will detect error between drive selected and drive powered. Trolley will not operate.	No effect.	3
			Fails closed	PLC will detect error between drive selected and drive powered when switching to secondary drive. Trolley will not operate.	No effect.	3
I:2,3,C6	PLC input	Input de-energizes when drive selector switch opens, selecting secondary drive.	Fails de-energized	PLC will detect error between drive selected and drive powered. Trolley will not operate.	No effect.	3
			Fails energized	PLC will detect error between drive selected and drive powered when switching to secondary drive. Trolley will not operate.	No effect.	3
0:1,7,C1	PLC output	Supplies power to energize Trolley primary drive enable relay	Fails de-energized	Relay TPDE will not energize. TPMCM will not be enabled. Brake will (remain) set.	No effect.	3

Table 22. **Electrical FMEA - Trolley**

System/Subsystem: 325 Ton Bridge Cranes at the Vehicle Assembly Building High Bays 1/2/3/4 / Trolley
PMN: H72-1200-01, -02
Drawing No.: EB-2508
Reference Figure: None

Find No. Part No.	Part Name	Part Function	a. Failure Mode b. Cause c. FMN d. Detection Method e. Correcting Action f. Time to Effect g. Timeframe	Failure Effect On System Performance	Failure Effect On Vehicle Systems And/Or Personnel Safety	Crit Cat
			Fails energized	No effect. Relay TPDE will not energize until other PLC output energizes. IF relay TPDE energizes when secondary drive is selected, the PLC will detect error and disable Trolley.	No effect.	3
0:1,8,D2	PLC output	Supplies power to energize Trolley primary drive enable relay	Fails de-energized	Relay TPDE will not energize. TPMCM will not be enabled. Brake will (remain) set.	No effect.	3
			Fails energized	No effect. Relay TPDE will not energize until other PLC output energizes. IF relay TPDE energizes when secondary drive is selected, the PLC will detect error and disable Trolley.	No effect.	3
I:2,3,C3	PLC input	Input energizes when power is supplied to trolley primary drive enable relay	Fails de-energized	PLC will detect relay TPDE not energized and set error bit. PLC will not enable TPMCM or release brakes.	No effect.	3
			Fails energized	TPCMC will be disabled. Relay TPDE will de-energize relay TPDC, opening DC motor armature loop. PLC will not set brakes until zero speed achieved by Delta Tau motion controller or Delta Tau detects following error.	No effect.	3
TPDE	Trolley primary drive enable relay	Energizes when PLC enables drive, drive is ready, and a fault condition does not exist	Fails de-energized	TPDE will not energize relay TPDC to complete DC motor armature loop. Trolley drive will not operate.	No effect.	3

Table 22. **Electrical FMEA - Trolley**

System/Subsystem: 325 Ton Bridge Cranes at the Vehicle Assembly Building High Bays 1/2/3/4 / Trolley
PMN: H72-1200-01, -02
Drawing No.: EB-2508
Reference Figure: None

Find No. Part No.	Part Name	Part Function	a. Failure Mode b. Cause c. FMN d. Detection Method e. Correcting Action f. Time to Effect g. Timeframe	Failure Effect On System Performance	Failure Effect On Vehicle Systems And/Or Personnel Safety	Crit Cat
			Fails energized	TPMCM will be disabled by internal fault. PLC will cause brakes to set.	No effect.	3
	Contact	Closes to energize relay TPDC	Fails open	TPDE will not energize relay TPDC to complete DC motor armature loop. Trolley drive will not operate.	No effect.	3
			Fails closed	TPDE contact will disable TPMCM, PLC input will cause PLC to set brakes.	No effect.	3
	Contact	Closes to drive enable input to TPMCM	Fails open	TPMCM will not be enabled. Trolley drive will not operate	No effect.	3
			Fails closed	Other contact will de-energize relay TPDC, opening DC motor armature loop. PLC input will cause brakes to be set.	No effect.	3
0:1,7,C2	PLC output	Supplies power to energize Trolley secondary drive enable relay	Fails de-energized	Relay TSDE will not energize. TSMCM will not be enabled. Brake will (remain) set.	No effect.	3
			Fails energized	No effect. Relay TSDE will not energize until other PLC output energizes. IF relay TSDE energizes when primary drive is selected, the PLC will detect error and disable Trolley.	No effect.	3
0:1,8,D3	PLC output	Supplies power to energize Trolley secondary drive enable relay	Fails de-energized	Relay TSDE will not energize. TPMCM will not be enabled. Brake will (remain) set.	No effect.	3

Table 22. **Electrical FMEA - Trolley**

System/Subsystem: 325 Ton Bridge Cranes at the Vehicle Assembly Building High Bays 1/2/3/4 / Trolley
PMN: H72-1200-01, -02
Drawing No.: EB-2508
Reference Figure: None

Find No. Part No.	Part Name	Part Function	a. Failure Mode b. Cause c. FMN d. Detection Method e. Correcting Action f. Time to Effect g. Timeframe	Failure Effect On System Performance	Failure Effect On Vehicle Systems And/Or Personnel Safety	Crit Cat
			Fails energized	No effect. Relay TSDE will not energize until other PLC output energizes. IF relay TSDE energizes when primary drive is selected, the PLC will detect error and disable Trolley.	No effect.	3
I:2,3,C4	PLC input	Input energizes when power is supplied to trolley secondary drive enable relay	Fails de-energized	PLC will detect relay TSDE not energized and set error bit. PLC will not enable TSMCM or release brakes.	No effect.	3
			Fails energized	TSMCM will be disabled. Relay TSDE will de-energize relay TSDC, opening DC motor armature loop. PLC will not set brakes until zero speed achieved by Delta Tau motion controller or Delta Tau detects following error.	No effect.	3
TSDE	Trolley secondary drive enable relay	Energizes when PLC enables drive, drive is ready, and a fault condition does not exist	Fails de-energized	TSDE will not energize relay TSDC to complete DC motor armature loop. Trolley drive will not operate.	No effect.	3
			Fails energized	TSMCM will be disabled by internal fault. PLC will cause brakes to set.	No effect.	3
	Contact	Closes to energize relay TSDC	Fails open	TSDE will not energize relay TSDC to complete DC motor armature loop. Trolley drive will not operate.	No effect.	3
			Fails closed	TSDE contact will disable TSMCM, PLC input will cause PLC to set brakes.	No effect.	3

Table 22. **Electrical FMEA - Trolley**

System/Subsystem: 325 Ton Bridge Cranes at the Vehicle Assembly Building High Bays 1/2/3/4 / Trolley
PMN: H72-1200-01, -02
Drawing No.: EB-2508
Reference Figure: None

Find No. Part No.	Part Name	Part Function	a. Failure Mode b. Cause c. FMN d. Detection Method e. Correcting Action f. Time to Effect g. Timeframe	Failure Effect On System Performance	Failure Effect On Vehicle Systems And/Or Personnel Safety	Crit Cat
	Contact	Closes to drive enable input to TSMCM	Fails open	TSMCM will not be enabled. Trolley drive will not operate	No effect.	3
			Fails close	Other contact will de-energize relay TSDC, opening DC motor armature loop. PLC input will cause brakes to be set.	No effect.	3
0:1,7,C3	PLC output	Supplies power to energize Trolley brake contactor relay	Fails de-energized	Trolley brakes will not release. Trolley drive will attempt to drive through brakes. May cause following error in Delta Tau motion control board resulting in PLC disabling drive.	No effect.	3
			Fails energized	Associated PLC output will de-energize brake relay, setting brakes.	No effect.	3
0:1,9,A1	PLC output	Supplies power to energize Trolley brake contactor relay	Fails de-energized	Trolley brakes will not release. Trolley drive will attempt to drive through brakes. May cause following error in Delta Tau motion control board resulting in PLC disabling drive.	No effect.	3
			Fails energized	Associated PLC output will de-energize brake relay, setting brakes.	No effect.	3
I:2,3,C5	PLC input	Input energizes when power is supplied to trolley brake contactor relay	Fails de-energized	No effect. This input is not used by PLC ladder logic.	No effect.	3
			Fails energized	No effect. This input is not used by PLC ladder logic.	No effect.	3

Table 22. **Electrical FMEA - Trolley**

System/Subsystem: 325 Ton Bridge Cranes at the Vehicle Assembly Building High Bays 1/2/3/4 / Trolley
PMN: H72-1200-01, -02
Drawing No.: EB-2508
Reference Figure: None

Find No. Part No.	Part Name	Part Function	a. Failure Mode b. Cause c. FMN d. Detection Method e. Correcting Action f. Time to Effect g. Timeframe	Failure Effect On System Performance	Failure Effect On Vehicle Systems And/Or Personnel Safety	Crit Cat
TBR	Trolley brake contactor relay	Energizes when PLC outputs supply power to release trolley brakes	Fails de-energized	Trolley brakes will not release. Trolley drive will attempt to drive through brakes. Will cause following error in Delta Tau motion control board resulting in PLC disabling drive.	No effect.	3
			Fails energized	Trolley brakes will not set. Trolley will stop by regenerative braking of drive.	No effect.	3
	Contacts	Close to supply AC power to TRECT and Trolley brakes	Fails open	Trolley brakes will not release. Trolley drive will attempt to drive through brakes. Will cause following error in Delta Tau motion control board resulting in PLC disabling drive.	No effect.	3
			Fails closed	Associated contact will open circuit, setting brakes.	No effect.	3
None	Position display select source	Energizes PLC input to select East encoder as position display data source	Fails open	Loss of ability to switch from West encoder to East encoder as position display source.	No effect.	3
			Fails closed	Loss of ability to switch from East encoder to West encoder as position display source.	No effect.	3
GI:09,IN6	PLC input	Input energizes when East motor encoder is selected for position display data source	Fails de-energized	Loss of ability to switch from East encoder to West encoder as position display source.	No effect.	3

Table 22. **Electrical FMEA - Trolley**

System/Subsystem: 325 Ton Bridge Cranes at the Vehicle Assembly Building High Bays 1/2/3/4 / Trolley
PMN: H72-1200-01, -02
Drawing No.: EB-2508
Reference Figure: None

Find No. Part No.	Part Name	Part Function	a. Failure Mode b. Cause c. FMN d. Detection Method e. Correcting Action f. Time to Effect g. Timeframe	Failure Effect On System Performance	Failure Effect On Vehicle Systems And/Or Personnel Safety	Crit Cat
			Fails energized	Loss of ability to switch from West encoder to East encoder as position display source.	No effect.	3
None	Trolley display reset push button, momentary contact	Contact closes to energize PLC input when operator commands position display to reset to zero	Fails open	Unable to reset trolley position display to zero.	No effect.	3
			Fails closed	Trolley display will lock-up with indicator needle blanked out and digital readout showing - - -. -, to alert operator that the display is struck in reset mode.	No effect.	3
GI:09,IN7	PLC input	Input energizes when display push button is pressed	Fails de-energized	Unable to reset trolley position display to zero.	No effect.	3
			Fails energized	Trolley display will lock-up with indicator needle blanked out and digital readout showing - - -. -, to alert operator that the display is struck in reset mode.	No effect.	3
I:2,4,D3	PLC input	Input de-energizes when trolley West blower motor overload contacts open	Fails de-energized	PLC will detect motor blower overload that does not exist. PLC will disable drive and set brakes.	No effect.	3

Table 22. **Electrical FMEA - Trolley**

System/Subsystem: 325 Ton Bridge Cranes at the Vehicle Assembly Building High Bays 1/2/3/4 / Trolley
PMN: H72-1200-01, -02
Drawing No.: EB-2508
Reference Figure: None

Find No. Part No.	Part Name	Part Function	a. Failure Mode b. Cause c. FMN d. Detection Method e. Correcting Action f. Time to Effect g. Timeframe	Failure Effect On System Performance	Failure Effect On Vehicle Systems And/Or Personnel Safety	Crit Cat
			Fails energized	PLC will not shut down blower if overload occurs. TPFUL1-6 or TSFU1-6 will protect circuitry from excessive current. Trolley drive motor sensors will warn operator and shut down drive if motor overheats.	No effect.	3
I:2,4,D4	PLC input	Input de-energizes when trolley East blower motor overload contacts open	Fails de-energized	PLC will detect motor blower overload that does not exist. PLC will disable drive and set brakes.	No effect.	3
			Fails energized	PLC will not shut down blower if overload occurs. TPFU1-6 or TSFU1-6 will protect circuitry from excessive current. Trolley drive motor sensors will warn operator and shut down drive if motor overheats.	No effect.	3
O:2,2,A7	PLC output	Output supplies power to energize Trolley primary West motor blower starter relay	Fails de-energized	Blower motor will not run. Trolley drive motor sensors will warn operator if motor starts to overheat. If motor does overheat, PLC will disable drive and set brakes.	No effect.	3
			Fails energized	Blower will remain running continuously.	No effect.	3
TPWBS	Trolley primary West blower starter relay	Energizes when PLC output energizes to start Trolley motor blowers	Fails de-energized	Blower motor will not run. Trolley drive motor sensors will warn operator if motor starts to overheat. If motor does overheat, PLC will disable drive and set brakes.	No effect.	3

Table 22. **Electrical FMEA - Trolley**

System/Subsystem: 325 Ton Bridge Cranes at the Vehicle Assembly Building High Bays 1/2/3/4 / Trolley
PMN: H72-1200-01, -02
Drawing No.: EB-2508
Reference Figure: None

Find No. Part No.	Part Name	Part Function	a. Failure Mode b. Cause c. FMN d. Detection Method e. Correcting Action f. Time to Effect g. Timeframe	Failure Effect On System Performance	Failure Effect On Vehicle Systems And/Or Personnel Safety	Crit Cat
			Fails energized	Blower will remain running continuously.	No effect.	3
	Contacts	Close to supply power to trolley West blower motor	Fails open	Blower motor will not run. Trolley drive motor sensors will warn operator if motor starts to overheat. If motor does overheat, PLC will disable drive and set brakes.	No effect.	3
			Fails closed	Blower will remain running continuously.	No effect.	3
O:2,2,A8	PLC output	Output supplies power to energize Trolley secondary West motor blower starter relay	Fails de-energized	Blower motor will not run. Trolley drive motor sensors will warn operator if motor starts to overheat. If motor does overheat, PLC will disable drive and set brakes.	No effect.	3
			Fails energized	Blower will remain running continuously.	No effect.	3
TSWBS	Trolley secondary West blower starter relay	Energizes when PLC output energizes to start Trolley motor blowers	Fails de-energized	Blower motor will not run. Trolley drive motor sensors will warn operator if motor starts to overheat. If motor does overheat, PLC will disable drive and set brakes.	No effect.	3
			Fails energized	Blower will remain running continuously.	No effect.	3

Table 22. **Electrical FMEA - Trolley**

System/Subsystem: 325 Ton Bridge Cranes at the Vehicle Assembly Building High Bays 1/2/3/4 / Trolley
PMN: H72-1200-01, -02
Drawing No.: EB-2508
Reference Figure: None

Find No. Part No.	Part Name	Part Function	a. Failure Mode b. Cause c. FMN d. Detection Method e. Correcting Action f. Time to Effect g. Timeframe	Failure Effect On System Performance	Failure Effect On Vehicle Systems And/Or Personnel Safety	Crit Cat
	Contacts	Close to supply power to trolley West blower motor	Fails open	Blower motor will not run. Trolley drive motor sensors will warn operator if motor starts to overheat. If motor does overheat, PLC will disable drive and set brakes.	No effect.	3
			Fails closed	Blower will remain running continuously.	No effect.	3
O:2,2,B1	PLC output	Output supplies power to energize Trolley primary East motor blower starter relay	Fails de-energized	Blower motor will not run. Trolley drive motor sensors will warn operator if motor starts to overheat. If motor does overheat, PLC will disable drive and set brakes.	No effect.	3
			Fails energized	Blower will remain running continuously.	No effect.	3
TPEBS	Trolley primary East blower starter relay	Energizes when PLC output energizes to start Trolley motor blowers	Fails de-energized	Blower motor will not run. Trolley drive motor sensors will warn operator if motor starts to overheat. If motor does overheat, PLC will disable drive and set brakes.	No effect.	3
			Fails energized	Blower will remain running continuously.	No effect.	3
	Contacts	Close to supply power to trolley East blower motor	Fails open	Blower motor will not run. Trolley drive motor sensors will warn operator if motor starts to overheat. If motor does overheat, PLC will disable drive and set brakes.	No effect.	3

Table 22. **Electrical FMEA - Trolley**

System/Subsystem: 325 Ton Bridge Cranes at the Vehicle Assembly Building High Bays 1/2/3/4 / Trolley
PMN: H72-1200-01, -02
Drawing No.: EB-2508
Reference Figure: None

Find No. Part No.	Part Name	Part Function	a. Failure Mode b. Cause c. FMN d. Detection Method e. Correcting Action f. Time to Effect g. Timeframe	Failure Effect On System Performance	Failure Effect On Vehicle Systems And/Or Personnel Safety	Crit Cat
			Fails closed	Blower will remain running continuously.	No effect.	3
O:2,2,B2	PLC output	Output supplies power to energize Trolley secondary East motor blower starter relay	Fails de-energized	Blower motor will not run. Trolley drive motor sensors will warn operator if motor starts to overheat. If motor does overheat, PLC will disable drive and set brakes.	No effect.	3
			Fails energized	Blower will remain running continuously.	No effect.	3
TSEBS	Trolley secondary East blower starter relay	Energizes when PLC output energizes to start Trolley motor blowers	Fails de-energized	Blower motor will not run. Trolley drive motor sensors will warn operator if motor starts to overheat. If motor does overheat, PLC will disable drive and set brakes.	No effect.	3
			Fails energized	Blower will remain running continuously.	No effect.	3
	Contacts	Close to supply power to trolley East blower motor	Fails open	Blower motor will not run. Trolley drive motor sensors will warn operator if motor starts to overheat. If motor does overheat, PLC will disable drive and set brakes.	No effect.	3
			Fails closed	Blower will remain running continuously.	No effect.	3
TBFU1, TBFU2	Fuse	Protects circuitry from overloads in trolley brake circuit	Fails to operate	Associated fuse or upstream circuit Breaker will protect circuitry.	No effect.	3

Table 22. **Electrical FMEA - Trolley**

System/Subsystem: 325 Ton Bridge Cranes at the Vehicle Assembly Building High Bays 1/2/3/4 / Trolley
PMN: H72-1200-01, -02
Drawing No.: EB-2508
Reference Figure: None

Find No. Part No.	Part Name	Part Function	a. Failure Mode b. Cause c. FMN d. Detection Method e. Correcting Action f. Time to Effect g. Timeframe	Failure Effect On System Performance	Failure Effect On Vehicle Systems And/Or Personnel Safety	Crit Cat
			Prematurely operates	Loss of power to release brakes. Trolley drive will attempt to drive through brakes. Delta Tau motion control board will detect following error and disable drive if drag from brake is excessive.	No effect.	3
TBT	Transformer	Converts 480 VAC to 120 VAC for trolley brake circuit.	Fails open	Loss of power to release brakes. Trolley drive will attempt to drive through brakes. Delta Tau motion control board will detect following error and disable drive if drag from brake is excessive.	No effect.	3
			Fails shorted	TBFU1, TBFU2, TBFU3 and TMOV will protect circuitry from overload. Loss of power to release brakes. Trolley drive will attempt to drive through brakes. Delta Tau motion control board will detect following error and disable drive if drag from brake is excessive.	No effect.	3
TBFU3	Fuse	Protects circuitry from overloads in trolley brake circuit	Fails to operate	TBFU1 and TBFU2 will protect against overloads. Requires previous failure to cause overload.	No effect.	3
			Prematurely operates	Loss of power to release brakes. Trolley drive will attempt to drive through brakes. Delta Tau motion control board will detect following error and disable drive if drag from brake is excessive.	No effect.	3

Table 22. **Electrical FMEA - Trolley**

System/Subsystem: 325 Ton Bridge Cranes at the Vehicle Assembly Building High Bays 1/2/3/4 / Trolley
PMN: H72-1200-01, -02
Drawing No.: EB-2508
Reference Figure: None

Find No. Part No.	Part Name	Part Function	a. Failure Mode b. Cause c. FMN d. Detection Method e. Correcting Action f. Time to Effect g. Timeframe	Failure Effect On System Performance	Failure Effect On Vehicle Systems And/Or Personnel Safety	Crit Cat
TMOV	Metal oxide Varistor	Conducts when voltage exceeds a set level	Fails open	Voltage spikes will damage TRECK and other circuitry causing loss of power to release brakes. Trolley drive will attempt to drive through brakes. Delta Tau motion control board will detect following error and disable drive if drag from brake is excessive.	No effect.	3
			Fails shorted	TBFU1-3 will protect circuitry against overload. Loss of power to release brakes. Trolley drive will attempt to drive through brakes. Delta Tau motion control board will detect following error and disable drive if drag from brake is excessive.	No effect.	3
TRECT	Rectifier	Converts AC power to DC power for Trolley brake coils	Fails open	Loss of power to release brakes. Trolley drive will attempt to drive through brakes. Delta Tau motion control board will detect following error and disable drive if drag from brake is excessive.	No effect.	3
			Fails shorted	TBFU1-3 will protect circuitry against overload. Loss of power to release brakes. Trolley drive will attempt to drive through brakes. Delta Tau motion control board will detect following error and disable drive if drag from brake is excessive.	No effect.	3

Table 22. **Electrical FMEA - Trolley**

System/Subsystem: 325 Ton Bridge Cranes at the Vehicle Assembly Building High Bays 1/2/3/4 / Trolley
PMN: H72-1200-01, -02
Drawing No.: EB-2508
Reference Figure: None

Find No. Part No.	Part Name	Part Function	a. Failure Mode b. Cause c. FMN d. Detection Method e. Correcting Action f. Time to Effect g. Timeframe	Failure Effect On System Performance	Failure Effect On Vehicle Systems And/Or Personnel Safety	Crit Cat
TBR1, TBR2	Resistor	Limits current in DC loop of Trolley brake circuit	Fails open	Loss of power to release associated brake. Trolley drive will attempt to drive through brakes. Delta Tau motion control board will detect following error and disable drive if drag from brake is excessive, setting remaining brake.	No effect.	3
			Fails shorted	Higher current will damage brake coil with continued use, resulting in brake setting. Loss of power to release associated brake. Trolley drive will attempt to drive through brakes. Delta Tau motion control board will detect following error and disable drive if drag from brake is excessive, setting remaining brake.	No effect.	3
None	Brake coil	Creates magnetic field to actuate Trolley brake mechanism	Fails open	Brake will not release. Trolley drive will attempt to drive through brakes. Delta Tau motion control board will detect following error and disable drive if drag from brake is excessive, setting remaining brake.	No effect.	3
			Fails shorted	TBR1 or TBR2 will limit current in brake circuit. Failed brake will not release. Trolley drive will attempt to drive through brakes. Delta Tau motion control board will detect following error and disable drive if drag from brake is excessive, setting remaining brake	No effect.	3

Table 22. **Electrical FMEA - Trolley**

System/Subsystem: 325 Ton Bridge Cranes at the Vehicle Assembly Building High Bays 1/2/3/4 / Trolley
PMN: H72-1200-01, -02
Drawing No.: EB-2508
Reference Figure: None

Find No. Part No.	Part Name	Part Function	a. Failure Mode b. Cause c. FMN d. Detection Method e. Correcting Action f. Time to Effect g. Timeframe	Failure Effect On System Performance	Failure Effect On Vehicle Systems And/Or Personnel Safety	Crit Cat
None	West motor warning Thermistor	Provides variable resistance proportional to motor temperature	Fails open	Motor overtemp warning on continuously.	No effect.	3
			Fails shorted	Loss of motor overtemp warning. Motor overtemp shutdown will disable drive if overtemp occurs.	No effect.	3
TWMTW PCC NO. 135101	Motogard overtemp module	Supplies power to Trolley west overtemp warning light when an above normal motor temperature is detected	Fails low or no output	Loss of overtemp warning. Motor overtemp shutdown will disable drive if overtemp occurs.	No effect.	3
			Fails high output	Overtemp warning light will remain on continuously.	No effect.	3
None	Overtemp warning light	Indicates an above normal temperature in trolley West motor	Fails open	Loss of motor overtemp warning. Motor overtemp shutdown will disable drive if overtemp occurs	No effect.	3
			Fails shorted	When overtemp occurs, current overload will blow FU14. Trolley drive will be disabled.	No effect.	3
None	West motor shutdown Thermistor	Provides variable resistance proportional to motor temperature	Fails open	Overtemp shutdown module will energize PLC input. PLC will disable Trolley drive.	No effect.	3
			Fails shorted	Loss of automatic motor overtemp shutdown. Overtemp warning light will warn of overtemp condition in motor.	No effect.	3

Table 22. **Electrical FMEA - Trolley**

System/Subsystem: 325 Ton Bridge Cranes at the Vehicle Assembly Building High Bays 1/2/3/4 / Trolley
PMN: H72-1200-01, -02
Drawing No.: EB-2508
Reference Figure: None

Find No. Part No.	Part Name	Part Function	a. Failure Mode b. Cause c. FMN d. Detection Method e. Correcting Action f. Time to Effect g. Timeframe	Failure Effect On System Performance	Failure Effect On Vehicle Systems And/Or Personnel Safety	Crit Cat
TWMTS PCC NO. 135101	Motogard overtemp module	Energize PLC input when overtemp is detected in Trolley motor	Fails low or no output	Loss of automatic motor overtemp shutdown. Overtemp warning light will warn of overtemp condition in motor.	No effect.	3
			Fails high output	PLC input will be energized. PLC will disable Trolley drive.	No effect.	3
I:2,3,C7	PLC input	Energized by TWMTS when an overtemp condition occurs in Trolley West motor	Fails de-energized	Loss of automatic motor overtemp shutdown. Overtemp warning light will warn of overtemp condition in motor.	No effect.	3
			Fails energized	PLC will disable Trolley drive although an overtemp condition does not exist.	No effect.	3
GO:11,11	PLC output	Sends power to Trolley West motor overtemp indication light when overtemp occurs or indicator lights are tested	Fails de-energized	Loss of motor overtemp shutdown indication. PLC will disable trolley drive.	No effect.	3
			Fails energized	Trolley West motor overtemp indication light will remain illuminated continuously.	No effect.	3
None	Overtemp shutdown light	Indicates an above normal operating temperature in trolley West motor and Trolley drive have been disabled	Fails open	Loss of overtemp shutdown indication. Trolley drive will be disabled.	No effect.	3
			Fails shorted	When overtemp occurs, current overload will blow FU14. Trolley drive will be disabled.	No effect.	3

Table 22. **Electrical FMEA - Trolley**

System/Subsystem: 325 Ton Bridge Cranes at the Vehicle Assembly Building High Bays 1/2/3/4 / Trolley
PMN: H72-1200-01, -02
Drawing No.: EB-2508
Reference Figure: None

Find No. Part No.	Part Name	Part Function	a. Failure Mode b. Cause c. FMN d. Detection Method e. Correcting Action f. Time to Effect g. Timeframe	Failure Effect On System Performance	Failure Effect On Vehicle Systems And/Or Personnel Safety	Crit Cat
None	East motor warning Thermistor	Provides variable resistance proportional to motor temperature	Fails open	Motor overtemp warning on continuously.	No effect.	3
			Fails shorted	Loss of motor overtemp warning. Motor overtemp shutdown will disable drive if overtemp occurs.	No effect.	3
TEMTW	Motogard overtemp module	Supplies power to Trolley East overtemp warning light when an above normal motor temperature is detected	Fails low or no output	Loss of overtemp warning. Motor overtemp shutdown will disable drive if overtemp occurs.	No effect.	3
			Fails high output	Overtemp warning light will remain on continuously.	No effect.	3
None	Overtemp warning light	Indicates an above normal temperature in trolley East motor	Fails open	Loss of motor overtemp warning. Motor overtemp shutdown will disable drive if overtemp occurs.	No effect.	3
			Fails shorted	When overtemp occurs, current overload will blow FU14. Trolley drive will be disabled.	No effect.	3
None	East motor shutdown Thermistor	Provides variable resistance proportional to motor temperature	Fails open	Overtemp shutdown module will energize PLC input. PLC will disable Trolley drive.	No effect.	3
			Fails shorted	Loss of automatic motor overtemp shutdown. Overtemp warning light will warn of overtemp condition in motor.	No effect.	3

Table 22. **Electrical FMEA - Trolley**

System/Subsystem: 325 Ton Bridge Cranes at the Vehicle Assembly Building High Bays 1/2/3/4 / Trolley
PMN: H72-1200-01, -02
Drawing No.: EB-2508
Reference Figure: None

Find No. Part No.	Part Name	Part Function	a. Failure Mode b. Cause c. FMN d. Detection Method e. Correcting Action f. Time to Effect g. Timeframe	Failure Effect On System Performance	Failure Effect On Vehicle Systems And/Or Personnel Safety	Crit Cat
TEMTS	Motogard overtemp module	Energize PLC input when overtemp is detected in Trolley motor	Fails low or no output	Loss of automatic motor overtemp shutdown. Overtemp warning light will warn of overtemp condition in motor.	No effect.	3
			Fails high output	PLC input will be energized. PLC will disable Trolley drive.	No effect.	3
I:2,3,C8	PLC input	Energized by TEMTS when an overtemp condition occurs in Trolley East motor	Fails de-energized	Loss of automatic motor overtemp shutdown. Overtemp warning light will warn of overtemp condition in motor.	No effect.	3
			Fails energized	PLC will disable Trolley drive although an overtemp condition does not exist.	No effect.	3
GO:11,12	PLC output	Sends power to Trolley East motor overtemp indication light when overtemp occurs or indicator lights are tested	Fails de-energized	Loss of motor overtemp shutdown indication. PLC will disable trolley drive.	No effect.	3
			Fails energized	Trolley West motor overtemp indication light will remain illuminated continuously.	No effect.	3
None	Overtemp shutdown light	Indicates an above normal operating temperature in trolley East motor and Trolley drive have been disabled	Fails open	Loss of overtemp shutdown indication. Trolley drive will be disabled.	No effect.	3
			Fails shorted	When overtemp occurs, current overload will blow FU14. Trolley drive will be disabled.	No effect.	3

Table 22. **Electrical FMEA - Trolley**

System/Subsystem: 325 Ton Bridge Cranes at the Vehicle Assembly Building High Bays 1/2/3/4 / Trolley
PMN: H72-1200-01, -02
Drawing No.: EB-2508
Reference Figure: None

Find No. Part No.	Part Name	Part Function	a. Failure Mode b. Cause c. FMN d. Detection Method e. Correcting Action f. Time to Effect g. Timeframe	Failure Effect On System Performance	Failure Effect On Vehicle Systems And/Or Personnel Safety	Crit Cat
TPSRA Ref. 0003721	Scaling resistor assembly	Scale voltage from fault resistors to conform to TPFSA circuitry	Fails open	Voltage imbalance will be detected by TPFSA , TPFSA will disable TPMCM and de-energize relay TPRDY.	No effect.	3
			Fails shorted	Voltage imbalance will be detected by TPFSA , TPFSA will disable TPMCM and de-energize relay TPRDY.	No effect.	3
TPFSA Ref. 0001802	Trolley primary fault sense assembly	Monitor Trolley primary motor control module current balance, disabling TPMCM if imbalance occurs				
	J1-6	Provide ground for relay TPRDY	Fails high	Relay TPRDY will not energized. Trolley drive will be disabled. Brakes will set.	No effect.	3
			Fails low	Relay TPRDY will remain energized. Relays TPFSA and TPDE will disable TPMCM. Brakes will set.	No effect.	3
	J2-12	Provide enable signal for TPMCM	Fails high	TPMCM will not be enabled. Trolley drive will not run.	No effect.	3
			Fails low	Relay TPDE and PLC output will disable TPMCM. Brakes will set.	No effect.	3

Table 22. **Electrical FMEA - Trolley**

System/Subsystem: 325 Ton Bridge Cranes at the Vehicle Assembly Building High Bays 1/2/3/4 / Trolley
PMN: H72-1200-01, -02
Drawing No.: EB-2508
Reference Figure: None

Find No. Part No.	Part Name	Part Function	a. Failure Mode b. Cause c. FMN d. Detection Method e. Correcting Action f. Time to Effect g. Timeframe	Failure Effect On System Performance	Failure Effect On Vehicle Systems And/Or Personnel Safety	Crit Cat
	J2-5	Provide power for sensing contacts of relay TPDC	Fails low or no output	TPFSA will sense that TPDC contact did not close even though it did. TPFSA will not enable TPMCM or provide ground for relay TPRDY. Trolley will not operate.	No effect.	3
	J2-6	Input from sensing contacts of relay TPDC	Fails high	TPFSA will sense that TPDC contact did not close even though it did. TPFSA will not enable TPMCM or provide ground for relay TPRDY. Trolley will not operate.	No effect.	3
			Fails low	Relay TPDE and PLC output will disable TPMCM. Brakes will set	No effect.	3
TPDRY	Relay	Energizes when TPMCM is ready and TPFSA J1-6 goes low	Fails de-energized	Relay TPDE, TPDC and PLC input will not be energized to complete DC motor armature loop. Trolley drive will not operate.	No effect.	3
			Fails de-energized	TPMCM J1-20 goes high when fault occurs, de-energizing relay TPFLT. TPFLT will de-energize relay TPDE, TPDC and PLC input . Trolley drive will be disabled and brakes will set.	No effect.	3
	Contact	Closes to energize relay TPDE	Fails open	Relay TPDE, TPDC and PLC input will not be energized to complete DC motor armature loop. Trolley drive will not operate.	No effect.	3

Table 22. **Electrical FMEA - Trolley**

System/Subsystem: 325 Ton Bridge Cranes at the Vehicle Assembly Building High Bays 1/2/3/4 / Trolley
PMN: H72-1200-01, -02
Drawing No.: EB-2508
Reference Figure: None

Find No. Part No.	Part Name	Part Function	a. Failure Mode b. Cause c. FMN d. Detection Method e. Correcting Action f. Time to Effect g. Timeframe	Failure Effect On System Performance	Failure Effect On Vehicle Systems And/Or Personnel Safety	Crit Cat
			Fails closed	TPMCM J1-20 goes high when fault occurs, de-energizing relay TPFLT. TPFLT will de-energize relay TPDE, TPDC and PLC input . Trolley drive will be disabled and brakes will set.	No effect.	3
TPFLT	Trolley primary fault relay	De-energizes when TPMCM J1-20 goes high, signaling TPMCM has a fault and has shut down	Fails de-energized	Relay TPFLT will indicate a fault exist in the TPMCM when a fault does not exist. Relays TPDE, TPDC, and PLC input will be de-energized. Trolley drive will be disabled and brakes will set.	No effect.	3
			Fails de-energized	TPMCM J2-15 will go low when fault occurs, de-energizing relay TPRDY. TPRDY will de-energize relay TPDE, TPDC and PLC input . Trolley drive will be disabled and brakes will set.	No effect.	3
	Contact	Closes to energize relay TPDE	Fails open	Relay TPFLT will indicate a fault exist in the TPMCM when a fault does not exist. Relays TPDE, TPDC, and PLC input will be de-energized. Trolley drive will be disabled and brakes will set.	No effect.	3
			Fails closed	TPMCM J2-15 will go low when fault occurs, de-energizing relay TPRDY. TPRDY will de-energize relay TPDE, TPDC and PLC input . Trolley drive will be disabled and brakes will set.	No effect.	3

Table 22. **Electrical FMEA - Trolley**

System/Subsystem: 325 Ton Bridge Cranes at the Vehicle Assembly Building High Bays 1/2/3/4 / Trolley
PMN: H72-1200-01, -02
Drawing No.: EB-2508
Reference Figure: None

Find No. Part No.	Part Name	Part Function	a. Failure Mode b. Cause c. FMN d. Detection Method e. Correcting Action f. Time to Effect g. Timeframe	Failure Effect On System Performance	Failure Effect On Vehicle Systems And/Or Personnel Safety	Crit Cat
O:1,5,C1	PLC output	Energizes input J2-6, RUN of TPMCM	Fails de-energized	TPMCM circuitry will not be enabled. Trolley drive will not operate	No effect.	3
			Fails energized	Delta Tau motion controller will command TPMCM to maintain zero speed. Brakes will set.	No effect.	3
TPMCM	Trolley primary motor control module	Provides primary armature and field control of both trolley motors				
	J1-8,9	DC current reference input from PLC.	Fails low	TPMCM will provide too low a current to achieve or maintain speed commanded. Delta Tau motion controller will detect following error. PLC will shut down Trolley drive and set brakes.	No effect.	3
			Fails high	TPMCM will provide too high a current to achieve or maintain speed commanded. Delta Tau motion controller will detect following error. PLC will shut down Trolley drive and set brakes.	No effect.	3
	J1-14	+15 volts DC output for Trolley primary fault sense assembly	Fails low	Voltage offset will cause imbalance in TPFSA comparators. TPFSA will indicate a fault has occurred and disabled TPMCM. TPMCM will de-energize relays TPFLT and TPRDY causing PLC to disable drive and set brakes.	No effect.	3

Table 22. **Electrical FMEA - Trolley**

System/Subsystem: 325 Ton Bridge Cranes at the Vehicle Assembly Building High Bays 1/2/3/4 / Trolley
PMN: H72-1200-01, -02
Drawing No.: EB-2508
Reference Figure: None

Find No. Part No.	Part Name	Part Function	a. Failure Mode b. Cause c. FMN d. Detection Method e. Correcting Action f. Time to Effect g. Timeframe	Failure Effect On System Performance	Failure Effect On Vehicle Systems And/Or Personnel Safety	Crit Cat
			Fails high	Voltage offset will cause imbalance in TPFSA comparators. TPFSA will indicate a fault has occurred and disabled TPMCM. TPMCM will de-energize relays TPFLT and TPRDY causing PLC to disable drive and set brakes.	No effect.	3
	J1-17	-15 volts DC output for Trolley primary fault sense assembly	Fails low	Voltage offset will cause imbalance in TPFSA comparators. TPFSA will indicate a fault has occurred and disable TPMCM. TPMCM will de-energize relays TPFLT and TPRDY causing PLC to disable drive and set brakes.	No effect.	3
			Fails high	Voltage offset will cause imbalance in TPFSA comparators. TPFSA will indicate a fault has occurred and disabled TPMCM. TPMCM will de-energize relays TPFLT and TPRDY causing PLC to disable drive and set brakes.	No effect.	3
	J1-20	Motor control fault output, goes high when fault occurs in TPMCM	Fails low	TPMCM J2-15 will go low when fault occurs, de-energizing relay TPRDY. TPRDY will de-energize relays TPDE, TPDC, and PLC input. Trolley drive will be disabled and brakes will be set.	No effect.	3

Table 22. **Electrical FMEA - Trolley**

System/Subsystem: 325 Ton Bridge Cranes at the Vehicle Assembly Building High Bays 1/2/3/4 / Trolley
PMN: H72-1200-01, -02
Drawing No.: EB-2508
Reference Figure: None

Find No. Part No.	Part Name	Part Function	a. Failure Mode b. Cause c. FMN d. Detection Method e. Correcting Action f. Time to Effect g. Timeframe	Failure Effect On System Performance	Failure Effect On Vehicle Systems And/Or Personnel Safety	Crit Cat
			Fails high	Relay TPFLT will indicate a fault exists in the TPMCM when a fault does not exist. Relays TPDE, TPDC, and PLC input will be de-energized. Trolley drive will be disabled and brakes will be set.	No effect.	3
	J2-4	Drive enable input from fault sense assembly and relay TPDE	Fails low	TPMCM will not be enabled. Trolley drive will not run.	No effect.	3
			Fails high	Relay TPDE will de-energize relay TPDC, opening DC motor armature loop. PLC will cause brakes to be set.	No effect.	3
	J2-6	Drive run input from PLC	Fails low	TPMCM circuitry will not be enabled, Trolley will not operate.	No effect.	3
			Fails high	Delta Tau motion controller will command TPMCM to maintain zero current. Brakes will set.	No effect.	3
	J2-15	Ready relay output to relay TPRDY	Fails low	TPMCM will not energize relay TPRDY or signal Delta Tau motion controller that TPMCM is ready. Trolley drive will be disabled, PLC will set brakes.	No effect.	3
			Fails high	TPMCM J1-20 will de-energize relay TPFLT when fault occurs, de-energizing relays TPDE, TPDC, and PLC input. Drive will be disabled and PLC will set Brake.	No effect.	3

Table 22. **Electrical FMEA - Trolley**

System/Subsystem: 325 Ton Bridge Cranes at the Vehicle Assembly Building High Bays 1/2/3/4 / Trolley
PMN: H72-1200-01, -02
Drawing No.: EB-2508
Reference Figure: None

Find No. Part No.	Part Name	Part Function	a. Failure Mode b. Cause c. FMN d. Detection Method e. Correcting Action f. Time to Effect g. Timeframe	Failure Effect On System Performance	Failure Effect On Vehicle Systems And/Or Personnel Safety	Crit Cat
	J2-18	+25 volts DC output for Trolley primary fault sense assembly and relay TPFLT	Fails low	Loss of +25 VDC to TPFSA and relay. TPMCM input J2-6 will not be energized to enable TPMCM circuitry. Trolley drive will not operate. TPMCM will fault internally on loss of +25 VDC and de-energize relays TPRDY and TPFLT, causing PLC to disable drive and set brake.	No effect.	3
			Fails high	Possible damage to fault sense assembly or cause motor control module to malfunction. PLC will detect fault, disable drive, and set brakes.	No effect.	3
TSSRA Ref. 0003721	Scaling resistor assembly	Scale voltage from fault resistors to conform to TSFSA circuitry	Fails open	Voltage imbalance will be detected by TSFSA. TSFSA will disable TSMCM and de-energize relay TSRDY.	No effect.	3
			Fails shorted	Voltage imbalance will be detected by TSFSA, TSFSA will disable TSMCM and de-energize relay TSRDY.	No effect.	3
TSFSA Ref. 0001802	Trolley secondary fault sense assembly	Monitor Trolley secondary motor control module current balance, disabling TSMCM if imbalance occurs				
	J1-6	Provide ground for relay TPRDY	Fails high	Relay TSRDY will not energize. Trolley drive will be disabled.	No effect.	3

Table 22. **Electrical FMEA - Trolley**

System/Subsystem: 325 Ton Bridge Cranes at the Vehicle Assembly Building High Bays 1/2/3/4 / Trolley
PMN: H72-1200-01, -02
Drawing No.: EB-2508
Reference Figure: None

Find No. Part No.	Part Name	Part Function	a. Failure Mode b. Cause c. FMN d. Detection Method e. Correcting Action f. Time to Effect g. Timeframe	Failure Effect On System Performance	Failure Effect On Vehicle Systems And/Or Personnel Safety	Crit Cat
			Fails low	Relay TSRDY will remain energized. Relay TSFSA will disable TSMCM.	No effect.	3
	J2-12	Provide enable signal for TSMCM	Fails high	TSMCM will not be enabled. Trolley drive will not run.	No effect.	3
			Fails low	Relay TSDE and PLC output will disable TPMCM. Brakes will set.	No effect.	3
	J2-5	Provide power for sensing contacts of relay TSDC	Fails low or no output	TSFSA will sense that TSDC contact did not close even though it did. TSFSA will not enable TSMCM or provide ground for relay TSRDY. Trolley will not operate.	No effect.	3
			Fails high	No effect.	No effect.	3
	J2-6	Input from sensing contacts of relay TSDC	Fails low	TSFSA will sense that TSDC contact did not close even though it did. TSFSA will not enable TSMCM or provide ground for relay TSRDY. Trolley will not operate.	No effect.	3
			Fails high	Relay TSDE and PLC output will disable TSMCM. Brakes will set	No effect.	3
TSDRY	Relay	Energizes when TSMCM is ready and TPFSA J1-6 goes low	Fails de-energized	Relay TSDE, TSDC and PLC input will not be energized to complete DC motor armature loop. Trolley drive will not operate.	No effect.	3

Table 22. **Electrical FMEA - Trolley**

System/Subsystem: 325 Ton Bridge Cranes at the Vehicle Assembly Building High Bays 1/2/3/4 / Trolley
PMN: H72-1200-01, -02
Drawing No.: EB-2508
Reference Figure: None

Find No. Part No.	Part Name	Part Function	a. Failure Mode b. Cause c. FMN d. Detection Method e. Correcting Action f. Time to Effect g. Timeframe	Failure Effect On System Performance	Failure Effect On Vehicle Systems And/Or Personnel Safety	Crit Cat
			Fails energized	TSMCM J1-20 goes high when fault occurs, de-energizing relay TSFLT. TSFLT will de-energize relay TSDE, TSDC and PLC input. Trolley drive will be disabled and brakes will set.	No effect.	3
	Contact	Closes to energize relay TPDE	Fails open	Relay TSDE, TSDC and PLC input will not be energized to complete DC motor armature loop. Trolley drive will not operate.	No effect.	3
			Fails closed	TSMCM J1-20 goes high when fault occurs, de-energizing relay TSFLT. TSFLT will de-energize relay TSDE, TSDC and PLC input. Trolley drive will be disabled and brakes will set.	No effect.	3
TSFLT	Trolley secondary fault relay	Energizes when TSMCM J1-20 goes high, signaling TSMCM has a fault and has shut down	Fails de-energized	Relay TSFLT will indicate a fault exists in the TSMCM when a fault does not exist. Relays TSDE, TSDC, and PLC input will be de-energized. Trolley drive will be disabled and brakes will set.	No effect.	3
			Fails energized	TSMCM J2-15 will go low when fault occurs, de-energizing relay TSRDY. TSRDY will de-energize relay TSDE, TSDC and PLC input. Trolley drive will be disabled and brakes will set.	No effect.	3

Table 22. **Electrical FMEA - Trolley**

System/Subsystem: 325 Ton Bridge Cranes at the Vehicle Assembly Building High Bays 1/2/3/4 / Trolley
PMN: H72-1200-01, -02
Drawing No.: EB-2508
Reference Figure: None

Find No. Part No.	Part Name	Part Function	a. Failure Mode b. Cause c. FMN d. Detection Method e. Correcting Action f. Time to Effect g. Timeframe	Failure Effect On System Performance	Failure Effect On Vehicle Systems And/Or Personnel Safety	Crit Cat
	Contact	Closes to energize relay TSDE	Fails open	Relay TSFLT will indicate a fault exists in the TSMCM when a fault does not exist. Relays TSDE, TSDC, and PLC input will be de-energized. Trolley drive will be disabled and brakes will set.	No effect.	3
			Fails closed	TSMCM J2-15 will go low when fault occurs, de-energizing relay TSRDY. TSRDY will de-energize relay TSDE, TSDC and PLC input. Trolley drive will be disabled and brakes will set.	No effect.	3
O:1,5,C3	PLC output	Energizes input J2-6, RUN of TSMCM	Fails de-energized	TSMCM circuitry will be enabled. Trolley drive will not operate	No effect.	3
			Fails energized	Delta Tau motion controller will command TSMCM to maintain zero speed. Brakes will set.	No effect.	3
TSMCM	Trolley secondary motor control module	Provides secondary armature and field control of both trolley motors				
	J1-8,9	DC current reference input from PLC.	Fails low	TSMCM will provide too low a current to achieve or maintain speed commanded. Delta Tau motion controller will detect following error. PLC will shut down Trolley drive and set brakes.	No effect.	3

Table 22. **Electrical FMEA - Trolley**

System/Subsystem: 325 Ton Bridge Cranes at the Vehicle Assembly Building High Bays 1/2/3/4 / Trolley
PMN: H72-1200-01, -02
Drawing No.: EB-2508
Reference Figure: None

Find No. Part No.	Part Name	Part Function	a. Failure Mode b. Cause c. FMN d. Detection Method e. Correcting Action f. Time to Effect g. Timeframe	Failure Effect On System Performance	Failure Effect On Vehicle Systems And/Or Personnel Safety	Crit Cat
			Fails high	TSMCM will provide too high a current to achieve or maintain speed commanded. Delta Tau motion controller will detect following error. PLC will shut down Trolley drive and set brakes.	No effect.	3
	J1-14	+15 volts DC output for Trolley primary fault sense assembly	Fails low	Voltage offset will cause imbalance in TSFSA comparators. TSFSA will indicate a fault has occurred and disabled TSMCM. TSMCM will de-energize relays TSFLT and TSRDY causing PLC to disable drive and set brakes.	No effect.	3
			Fails high	Voltage offset will cause imbalance in TSFSA comparators. TSFSA will indicate a fault has occurred and disabled TSMCM. TSMCM will de-energize relays TSFLT and TSRDY causing PLC to disable drive and set brakes.	No effect.	3
	J1-17	-15 volts DC output for Trolley secondary fault sense assembly	Fails low	Voltage offset will cause imbalance in TSFSA comparators. TSFSA will indicate a fault has occurred and disable TSMCM. TSMCM will de-energize relays TSFLT and TSRDY causing PLC to disable drive and set brakes.	No effect.	3

Table 22. **Electrical FMEA - Trolley**

System/Subsystem: 325 Ton Bridge Cranes at the Vehicle Assembly Building High Bays 1/2/3/4 / Trolley
PMN: H72-1200-01, -02
Drawing No.: EB-2508
Reference Figure: None

Find No. Part No.	Part Name	Part Function	a. Failure Mode b. Cause c. FMN d. Detection Method e. Correcting Action f. Time to Effect g. Timeframe	Failure Effect On System Performance	Failure Effect On Vehicle Systems And/Or Personnel Safety	Crit Cat
			Fails high	Voltage offset will cause imbalance in TSFSA comparators. TSFSA will indicate a fault has occurred and disable TSMCM. TSMCM will de-energize relays TSFLT and TSRDY causing PLC to disable drive and set brakes.	No effect.	3
	J1-20	Motor control fault output, goes high when fault occurs in TSMCM	Fails low	TSMCM J2-15 will go low when fault occurs, de-energizing relay TSRDY. TSRDY will de-energize relays TSDE, TSDC, and PLC input. Trolley drive will be disabled and brakes will be set.	No effect.	3
			Fails high	Relay TSFLT will indicate a fault exists in the TSMCM when a fault does not exist. Relays TSDE, TSDC, and PLC input will be de-energized. Trolley drive will be disabled and brakes will be set.	No effect.	3
	J2-4	Drive enable input from fault sense assembly and relay TSDE	Fails low	TSMCM will not be enabled. Trolley drive will not run.	No effect.	3
			Fails high	Relay TSDE will de-energize relay TSDC, opening DC motor armature loop. PLC will cause brakes to be set.	No effect.	3
	J2-6	Drive run input from PLC	Fails low	TSMCM circuitry will not be enabled. Trolley will not operate.	No effect.	3

Table 22. **Electrical FMEA - Trolley**

System/Subsystem: 325 Ton Bridge Cranes at the Vehicle Assembly Building High Bays 1/2/3/4 / Trolley
PMN: H72-1200-01, -02
Drawing No.: EB-2508
Reference Figure: None

Find No. Part No.	Part Name	Part Function	a. Failure Mode b. Cause c. FMN d. Detection Method e. Correcting Action f. Time to Effect g. Timeframe	Failure Effect On System Performance	Failure Effect On Vehicle Systems And/Or Personnel Safety	Crit Cat
			Fails high	Delta Tau motion controller will command TSMCM to maintain zero current. Brakes will set.	No effect.	3
	J2-15	Ready relay output to relay TSRDY	Fails low	TSMCM will not energize relay TSRDY or signal Delta Tau motion controller that TSMCM is ready. Trolley drive will be disabled. PLC will set brakes.	No effect.	3
			Fails high	TSMCM J1-20 will de-energize relay TSFLT when fault occurs, de-energizing relays TSDE, TSDC, and PLC input. Drive will be disabled and PLC will set Brake.	No effect.	3
	J2-18	+25 volts DC output for Trolley secondary fault sense assembly and relay TSFLT	Fails low	Loss of +25 VDC to TSFSA and relay. TSMCM input J2-6 will not be energized to enable TSMCM circuitry. Trolley drive will not operate. TSMCM will fault internally on loss of +25 VDC and de-energize relays TSRDY and TSFLT, causing PLC to disable drive and set brake.	No effect.	3
			Fails high	Possible damage to fault sense assembly or cause motor control module to malfunction. PLC will detect fault, disable drive, and set brakes.	No effect.	3

Table 22. **Electrical FMEA - Trolley**

System/Subsystem: 325 Ton Bridge Cranes at the Vehicle Assembly Building High Bays 1/2/3/4 / Trolley
PMN: H72-1200-01, -02
Drawing No.: EB-2508
Reference Figure: None

Find No. Part No.	Part Name	Part Function	a. Failure Mode b. Cause c. FMN d. Detection Method e. Correcting Action f. Time to Effect g. Timeframe	Failure Effect On System Performance	Failure Effect On Vehicle Systems And/Or Personnel Safety	Crit Cat
None	Trolley West controller	Send digital feedback to Delta Tau motion control board for servoing	Fails no output	Delta Tau motion controller will detect loss of feedback and PLC will detect encoder imbalance. Trolley drive will be disabled and brakes will (remain) set.	No effect.	3
			Fails single line no output	Delta Tau motion controller will feedback error and PLC will detect encoder imbalance. Trolley drive will be disabled and brakes will (remain) set.	No effect.	3
None	Trolley East controller	Send digital feedback to Delta Tau motion control board for servoing	Fails no output	Delta Tau motion controller will detect loss of feedback and PLC will detect encoder imbalance. Trolley drive will be disabled and brakes will (remain) set.	No effect.	3
			Fails single line no output	Delta Tau motion controller will feedback error and PLC will detect encoder imbalance. Trolley drive will be disabled and brakes will (remain) set.	No effect.	3

Electrical FMEA, Bridge Primary Mode

Wire harnesses, cables, or connectors were not analyzed in the Electrical FMEA for this system since a single failure (open or short) could not result in the loss of life or vehicle. (Ref. NSTS 22206, Paragraph 4.4.1.b.2)

This FMEA section references Ederer drawing EB-2508, specifically the following sheets:

Sheet	Title
43	Bridge North Motor Control Elementary
44	Bridge South Motor Control Elementary
45	Bridge Control Elementary
46	Bridge Control Elementary
47	Bridge Control Elementary
48	Bridge Control Elementary
49	Bridge West Motor Control Electronics Elementary
50	Bridge East Motor Control Electronics Elementary
51	Bridge Anti-skewing and Positioning System

Table 23. **Electrical FMEA - Bridge Primary Mode**

System/Subsystem: 325 Ton Bridge Cranes at the Vehicle Assembly Building High Bays 1/2/3/4 / Bridge
PMN: H72-1200-01, -02
Drawing No.: EB-2508
Reference Figure: None

Find No. Part No.	Part Name	Part Function	a. Failure Mode b. Cause c. FMN d. Detection Method e. Correcting Action f. Time to Effect g. Timeframe	Failure Effect On System Performance	Failure Effect On Vehicle Systems And/Or Personnel Safety	Crit Cat
BNCB	Circuit Breaker	Protects circuitry from overloads in Bridge North Drive circuit	Prematurely Operates	Loss of power to Bridge North motor control module. Relays BNRDY and BNFLT will de-energize. PLC will detect drive not enabled and set brakes.	No effect.	3
			Fails to Operate	Overload will cause imbalance between power phases. BNFSA will detect imbalance and disable drive. PLC will set brakes. Requires previous failure to cause overload.	No effect.	3
BNIT	Isolation Transformer	Isolates North Drive circuitry to reduce electrical noise and interference	Fails Open	Loss of one or more power phases. BNFSA will detect imbalance and disable drive. PLC will set brakes.	No effect.	3
			Fails Shorted	Overload will trip BNCB. Drive will be disabled and brakes will set.	No effect.	3
BBNCB	Circuit Breaker	Protects circuitry from overloads in Bridge Motor blower circuit	Prematurely Operates	Loss of power to blower motors. If bridge motor starts to overheat, overheat warning light will come on in cab. If motor does overheat, bridge motor overheat shut down will occur. Drive will be disabled and brakes will set.	No effect.	3
			Fails to Operate	BNCB will protect against overloads. If overload is in motor, associated blower motor overload switch will open and PLC will disable drive and set brakes.	No effect.	3

Table 23. **Electrical FMEA - Bridge Primary Mode**

System/Subsystem: 325 Ton Bridge Cranes at the Vehicle Assembly Building High Bays 1/2/3/4 / Bridge
PMN: H72-1200-01, -02
Drawing No.: EB-2508
Reference Figure: None

Find No. Part No.	Part Name	Part Function	a. Failure Mode b. Cause c. FMN d. Detection Method e. Correcting Action f. Time to Effect g. Timeframe	Failure Effect On System Performance	Failure Effect On Vehicle Systems And/Or Personnel Safety	Crit Cat
None	Surge Suppresser	Protects circuitry from power surges	Prematurely Operates	Nuisance tripping of circuit Breaker BNCB.	No effect.	3
			Fails to Operate	Loss of power surge protection for downstream circuitry.	No effect.	3
NWBOL, NEBOL, SWBOL, SEBOL	Overload Switch	Switch contact opens when excessive current is detected in bridge motor blower circuitry	Prematurely Operates	Blower overload contact will open, de-energizing PLC input. PLC will set bit 5, 6, 11 or 12 of error word %R00107. PLC will disable bridge drive and set brakes.	No effect.	3
			Fails to Operate	BBNCB will protect against overload. Bridge drive will continue to operate. Motor overtemp sensors will detect if bridge motor overheats. Requires previous failure to cause overload.	No effect.	3
NWBOL-46H12 NEBOL-46H13 SWBOL-46H14 SEBOL-46H15	Contact	Opens to de-energize PLC Input	Fails Open	PLC input will not be energized. PLC will set bit in error word %R00107. PLC will disable bridge drive and set brakes.	No effect.	3
			Fails Closed	PLC input will not de-energize when excessive current is running through bridge west motor blower. BBNCB will protect circuitry from overload. Motor overtemp sensors will detect if bridge motor overheats. Requires previous failure to cause overload.	No effect.	3

Table 23. **Electrical FMEA - Bridge Primary Mode**

System/Subsystem: 325 Ton Bridge Cranes at the Vehicle Assembly Building High Bays 1/2/3/4 / Bridge
PMN: H72-1200-01, -02
Drawing No.: EB-2508
Reference Figure: None

Find No. Part No.	Part Name	Part Function	a. Failure Mode b. Cause c. FMN d. Detection Method e. Correcting Action f. Time to Effect g. Timeframe	Failure Effect On System Performance	Failure Effect On Vehicle Systems And/Or Personnel Safety	Crit Cat
None	Blower Motor	Provides cooling air flow for Bridge North-west, North-East, South-west, South-East bridge motors (4 each)	Fails Open	Loss of cooling air through bridge motor. Motor overtemp sensors will disable bridge drive if bridge motor overheats.	No effect.	3
			Fails Shorted	Current overload will either trip blower overload switch or trip BBNCB. Blower overload trip will be detected by PLC which will disable drive and set brakes. Loss of BBNCB will cause loss of cooling air through bridge motor. Motor overtemp sensors will disable bridge drive if bridge motor overheats.	No effect.	3
None	Resistor	Provides voltage input for Fault Sense Assembly	Fails Open	Voltage imbalance will be detected by BNFSA. BNFSA will disable drive and set brakes. Delta Tau motion control board servoing will ensure motor operates at commanded speed.	No effect.	3
			Fails Shorted	Voltage imbalance will be detected by BNFSA. BNFSA will disable drive and set brakes. Delta Tau motion control board servoing will ensure motor operates at commanded speed.	No effect.	3
None	Tachometer	Generates voltage proportional to rotational speed of north bridge motor	Fails Low or No Output	PLC will detect mismatch between encoder and tachometer feedback. PLC will disable drive and set brakes (in north drive only selected mode).	No effect.	3

Table 23. **Electrical FMEA - Bridge Primary Mode**

System/Subsystem: 325 Ton Bridge Cranes at the Vehicle Assembly Building High Bays 1/2/3/4 / Bridge
PMN: H72-1200-01, -02
Drawing No.: EB-2508
Reference Figure: None

Find No. Part No.	Part Name	Part Function	a. Failure Mode b. Cause c. FMN d. Detection Method e. Correcting Action f. Time to Effect g. Timeframe	Failure Effect On System Performance	Failure Effect On Vehicle Systems And/Or Personnel Safety	Crit Cat
			Fails High Output	PLC will detect mismatch between encoder and tachometer feedback. PLC will disable drive and set brakes (in north drive only selected mode).	No effect.	3
None	Resistor 200K Ohms	Provide tachometer voltage scaling for PLC input	Fails Open	Loss of tachometer feedback to PLC. PLC will detect mismatch between encoder and tachometer feedback. PLC will disable drive and set brakes.	No effect.	3
			Fails Shorted	Tachometer input will not be scaled down for PLC input. PLC will detect mismatch between encoder and tachometer feedback. PLC will disable drive and set brakes.	No effect.	3
None	Resistor 15K Ohms	Provide tachometer voltage scaling for PLC input	Fails Open	Tachometer feedback will not be scaled down for PLC input. PLC will detect mismatch between encoder and tachometer feedback. PLC will disable drive and set brakes.	No effect.	3
			Fails Shorted	Loss of tachometer feedback to PLC. PLC will detect mismatch between encoder and tachometer feedback. PLC will disable drive and set brakes.	No effect.	3

Table 23. **Electrical FMEA - Bridge Primary Mode**

System/Subsystem: 325 Ton Bridge Cranes at the Vehicle Assembly Building High Bays 1/2/3/4 / Bridge
PMN: H72-1200-01, -02
Drawing No.: EB-2508
Reference Figure: None

Find No. Part No.	Part Name	Part Function	a. Failure Mode b. Cause c. FMN d. Detection Method e. Correcting Action f. Time to Effect g. Timeframe	Failure Effect On System Performance	Failure Effect On Vehicle Systems And/Or Personnel Safety	Crit Cat
AI:2,7,I76	PLC Input %AI47	Provides interface for tachometer feedback voltage into PLC	Fails Low or No Output	Loss of tachometer feedback to PLC. PLC will detect mismatch between encoder and tachometer feedback. PLC will disable drive and set brakes.	No effect.	3
			Fails High Input	PLC will detect mismatch between encoder and tachometer feedback. PLC will disable drive and set brakes.	No effect.	3
BNMCM	Bridge North Motor Control Module	Provides north armature and field control of both north bridge motors				
	Armature Current Outputs A1, A2	Provides current for bridge motor armature windings	Fails Low or No Output	Motor speed will be slower than commanded. Delta Tau motion control board will detect following error. Drive will be disabled and brakes will set.	No effect.	3
			Fails High Output	Motor speed will be faster than commanded. Delta Tau motion control board will detect following error. Drive will be disabled and brakes will set.	No effect.	3
	Field Current Outputs F1, F2	Provides current for bridge motor field windings	Fails Low or No Output	Delta Tau motion control board will attempt to servo bridge motors to commanded speed. If motors do not reach or maintain commanded speed, Delta Tau motion control board will detect following error. Drive will be disabled and brakes will set.	No effect.	3

Table 23. **Electrical FMEA - Bridge Primary Mode**

System/Subsystem: 325 Ton Bridge Cranes at the Vehicle Assembly Building High Bays 1/2/3/4 / Bridge
PMN: H72-1200-01, -02
Drawing No.: EB-2508
Reference Figure: None

Find No. Part No.	Part Name	Part Function	a. Failure Mode b. Cause c. FMN d. Detection Method e. Correcting Action f. Time to Effect g. Timeframe	Failure Effect On System Performance	Failure Effect On Vehicle Systems And/Or Personnel Safety	Crit Cat
			Fails High Output	Delta Tau motion control board will attempt to servo bridge motors to commanded speed. If motors do not reach or maintain commanded speed, Delta Tau motor control board will detect following error. Drive will be disabled and brakes will set.	No effect.	3
BNWOL BNEOL	Overload Switch	Contract opens when excessive current is detected in motor armature loop	Prematurely Operates	PLC input will de-energize. PLC will disable drive and set brake.	No effect.	3
			Fails to Operate	Excessive current can flow through associated motor. Motor will overheat. Motor overheat sensors will detect condition and disable drive. Delta Tau will continue to servo motor to commanded speed. If speed does not match speed commanded, Delta Tau will disable drive and set brakes.	No effect.	3
BNWOL-46H02 BNEOL-46H03	Contact, Normally Closed	De-energizes PLC input when overload switch detects excessive current in motor armature loop	Fails Open	PLC input will remain de-energized. PLC will disable drive and set brakes.	No effect.	3

Table 23. **Electrical FMEA - Bridge Primary Mode**

System/Subsystem: 325 Ton Bridge Cranes at the Vehicle Assembly Building High Bays 1/2/3/4 / Bridge
PMN: H72-1200-01, -02
Drawing No.: EB-2508
Reference Figure: None

Find No. Part No.	Part Name	Part Function	a. Failure Mode b. Cause c. FMN d. Detection Method e. Correcting Action f. Time to Effect g. Timeframe	Failure Effect On System Performance	Failure Effect On Vehicle Systems And/Or Personnel Safety	Crit Cat
			Fails Closed	Excessive current can flow through associated motor. Motor will overheat. Motor overheat sensors will detect condition and disable drive. Delta Tau will continue to servo motor to commanded speed. If speed does not match speed commanded, Delta Tau will disable drive and set brakes.	No effect.	3
None	Ammeter (2)	Indicates amount of current flowing in motor armature loop	Fails Open	Cab ammeter will indicate zero current for one bridge motor. Bridge will operate normally.	No effect.	3
			Fails Shorted	Excessive current will flow through ammeter windings resulting in windings burning open. See above.	No effect.	3
BNAR1, BNAR2	Resistor	Provide resistance for balancing bridge motor speeds	Fails Open	Loss of current path for one bridge motor. Bridge drive will continue to run on the remaining motor. Higher current through remaining motor will trip current overload switch.	No effect.	3
			Fails Shorted	Higher current will flow through one bridge motor than the other. Bridge motor with higher current will trip overload switch or will overheat which will be detected by motor overheat sensors. Drive will be disabled if overheat occurs.	No effect.	3
None	Bridge Motor North-west & North-East	Provide torque to mechanical drive system to move bridge				

Table 23. **Electrical FMEA - Bridge Primary Mode**

System/Subsystem: 325 Ton Bridge Cranes at the Vehicle Assembly Building High Bays 1/2/3/4 / Bridge
PMN: H72-1200-01, -02
Drawing No.: EB-2508
Reference Figure: None

Find No. Part No.	Part Name	Part Function	a. Failure Mode b. Cause c. FMN d. Detection Method e. Correcting Action f. Time to Effect g. Timeframe	Failure Effect On System Performance	Failure Effect On Vehicle Systems And/Or Personnel Safety	Crit Cat
	Armature Windings	Provides torque to rotate motor output shaft	Fails Open	Loss of current path for one bridge motor. Bridge drive will continue to run on the remaining motor. Higher current through remaining motor will trip current overload switch or cause motor to overheat.	No effect.	3
			Fails Shorted	Excessive current will flow through shorted motor. BNMCM will detect instantaneous overcurrent, disabling drive and setting brakes. Excessive current will trip overload switch, disabling drive, or Delta Tau motion control board will detect following error.	No effect.	3
	Field Windings	Provides static magnetic field for armature magnetic field to work against	Fails Open	Loss of torque from one bridge motor. Bridge drive will continue to run on the remaining motor. Higher current through remaining motor will trip current overload switch or cause motor to overheat.	No effect.	3
			Fails Shorted	Excessive current will flow through field windings of one motor. BNMCM will detect field overcurrent fault, disabling drive and setting brakes.	No effect.	3
BFBR	Bridge Field Balancing Resistor	Balances bridge motor field current between north and south motor when operating on bridge north drive only	Fails Open	Current path for field windings will not be complete. BNMCM or BSMCM will fault on field current loss. Motors will not develop torque. Delta Tau will detect following error. Bridge drive will be disabled and brakes will set.	No effect.	3

Table 23. **Electrical FMEA - Bridge Primary Mode**

System/Subsystem: 325 Ton Bridge Cranes at the Vehicle Assembly Building High Bays 1/2/3/4 / Bridge
PMN: H72-1200-01, -02
Drawing No.: EB-2508
Reference Figure: None

Find No. Part No.	Part Name	Part Function	a. Failure Mode b. Cause c. FMN d. Detection Method e. Correcting Action f. Time to Effect g. Timeframe	Failure Effect On System Performance	Failure Effect On Vehicle Systems And/Or Personnel Safety	Crit Cat
			Fails Shorted	Field current imbalance will exist between north and south motors. Bridge will skew on crane rails. This component is for contingency operations only. Requires previous failures to make north or sough drive inoperable.	No effect.	3
BNFBR1	Bridge North Field Balancing Resistor	Balances bridge motor field current between northwest and northEast bridge motors	Fails Open	Current path for field windings will not be complete. BNMCM will fault on field current loss. Motors will not develop torque. Delta Tau will detect following error. Bridge drive will be disabled and brakes will set.	No effect.	3
			Fails Shorted	Field current imbalance will exist between north motors, causing one motor to develop higher torque. Will cause BNWOL or BNEOL to trip.	No effect.	3
BSCB	Circuit Breaker 125A	Protects circuitry from overloads in bridge south drive circuit	Prematurely Operates	Loss of power to bridge south motor control module. Relays BSRDY and BSFLT will de-energize. PLC will detect drive not enabled and set brakes.	No effect.	3
			Fails to Operate	Overload will cause imbalance between power phases. BSFSA will detect imbalance and disable drive. PLC will set brakes. Requires previous failure to cause overload.	No effect.	3

Table 23. **Electrical FMEA - Bridge Primary Mode**

System/Subsystem: 325 Ton Bridge Cranes at the Vehicle Assembly Building High Bays 1/2/3/4 / Bridge
PMN: H72-1200-01, -02
Drawing No.: EB-2508
Reference Figure: None

Find No. Part No.	Part Name	Part Function	a. Failure Mode b. Cause c. FMN d. Detection Method e. Correcting Action f. Time to Effect g. Timeframe	Failure Effect On System Performance	Failure Effect On Vehicle Systems And/Or Personnel Safety	Crit Cat
BSIT	Isolation Transformer	Isolates south drive circuit to reduce electrical noise and interference	Fails Open	Loss of one or more power phases. BSFSA will detect imbalance and disable drive. PLC will set brakes.	No effect.	3
			Fails Shorted	Overload will trip BSCB. Drive will be disabled and brakes will set.	No effect.	3
BBSCB	Bridge blower south circuit Breaker, 15A	Protects circuitry from overloads in bridge motor blower circuit	Prematurely Operates	Loss of power to blower motors. If bridge motor starts to overheat, overheat warning light will come on in cab. If motor does overheat, bridge motor overheat shut down will occur. Drive will be disabled and brakes will set.	No effect.	3
			Fails to Operate	BSCB will protect against overloads. If overload is in motor, associated blower motor overload switch will open and PLC will disable drive and set brakes.	No effect.	3
None	Resistor	Provides voltage input for Fault Sense Assembly	Fails Open	Voltage imbalance will be detected by BSFSA. BSFSA will disable drive and set brakes. Delta Tau motion control board servoing will ensure motor operates at commanded speed.	No effect.	3
			Fails Short	Voltage imbalance will be detected by BSFSA. BSFSA will disable drive and set brakes. Delta Tau motion control board servoing will ensure motor operates at commanded speed.	No effect.	3

Table 23. **Electrical FMEA - Bridge Primary Mode**

System/Subsystem: 325 Ton Bridge Cranes at the Vehicle Assembly Building High Bays 1/2/3/4 / Bridge
PMN: H72-1200-01, -02
Drawing No.: EB-2508
Reference Figure: None

Find No. Part No.	Part Name	Part Function	a. Failure Mode b. Cause c. FMN d. Detection Method e. Correcting Action f. Time to Effect g. Timeframe	Failure Effect On System Performance	Failure Effect On Vehicle Systems And/Or Personnel Safety	Crit Cat
None	Tachometer	Generates voltage proportional to rotational speed of south bridge motor	Fails Low or No Output	PLC will detect mismatch between encoder and tachometer feedback. PLC will disable drive and set brakes (in south drive only selected mode).	No effect.	3
			Fails High Output	PLC will detect mismatch between encoder and tachometer feedback. PLC will disable drive and set brakes (in south drive only selected mode).	No effect.	3
BSMCM	Bridge South Motor Control Module	Provides armature and field control of both bridge south motors				
	Armature current outputs, A1, A2	Provides current for bridge motor armature windings	Fails Low or No Output	Motor speed will be slower than commanded. Delta Tau motion control board will detect following error. Drive will be disabled and brakes will set.	No effect.	3
			Fails High Output	Motor speed will be faster than commanded. Delta Tau motion control board will detect following error. Drive will be disabled and brakes will set.	No effect.	3
	Field current outputs, F1, F2	Provides current for bridge motor field windings	Fails Low or No Output	Delta Tau motion control board will attempt to servo bridge motors to commanded speed. If motors do not reach or maintain commanded speed, Delta Tau motion control board will detect following error. Drive will be disabled and brakes will set.	No effect.	3

Table 23. **Electrical FMEA - Bridge Primary Mode**

System/Subsystem: 325 Ton Bridge Cranes at the Vehicle Assembly Building High Bays 1/2/3/4 / Bridge
PMN: H72-1200-01, -02
Drawing No.: EB-2508
Reference Figure: None

Find No. Part No.	Part Name	Part Function	a. Failure Mode b. Cause c. FMN d. Detection Method e. Correcting Action f. Time to Effect g. Timeframe	Failure Effect On System Performance	Failure Effect On Vehicle Systems And/Or Personnel Safety	Crit Cat
			Fails High Output	Delta Tau motion control board will attempt to servo bridge motors to commanded speed. If motors do not reach or maintain commanded speed, Delta Tau motion control board will detect following error. Drive will be disabled and brakes will set.	No effect.	3
BSWOL, BSEOL	Overload Switch	Contact opens when excessive current is detected in motor armature loop	Prematurely Operates	PLC input will de-energize. PLC will disable drive and set brake.	No effect.	3
			Fails to Operate	Excessive current can flow through associated motor. Motor will overheat. Motor overheat sensors will detect condition and disable drive. Delta Tau will continue to servo motor to commanded speed. If speed does not match speed commanded, Delta Tau will disable drive and set brakes.	No effect.	3
BSWOL-46H04 BSEOL-46H05	Contact, Normally Closed	De-energizes PLC input when overload switch detects excessive current in motor armature loop	Fails Open	PLC input will remain de-energized. PLC will disable drive and set brakes.	No effect.	3

Table 23. **Electrical FMEA - Bridge Primary Mode**

System/Subsystem: 325 Ton Bridge Cranes at the Vehicle Assembly Building High Bays 1/2/3/4 / Bridge
PMN: H72-1200-01, -02
Drawing No.: EB-2508
Reference Figure: None

Find No. Part No.	Part Name	Part Function	a. Failure Mode b. Cause c. FMN d. Detection Method e. Correcting Action f. Time to Effect g. Timeframe	Failure Effect On System Performance	Failure Effect On Vehicle Systems And/Or Personnel Safety	Crit Cat
			Fails Closed	Excessive current can flow through associated motor. Motor will overheat. Motor overheat sensors will detect condition and disable drive. Delta Tau will continue to servo motor to commanded speed. If speed does not match speed commanded, Delta Tau will disable drive and set brakes.	No effect.	3
None	Ammeter (2)	Indicates amount of current flowing in motor armature loop	Fails Open	Cab ammeter will indicate zero current for one bridge motor. Bridge will operate normally.	No effect.	3
			Fails Closed	Excessive current will flow through ammeter windings resulting in windings burning open. See above.	No effect.	3
BSAR1, BSAR2	Resistor	Provide resistance for balancing bridge motor speeds	Fails Open	Loss of current path for one bridge motor. Bridge drive will continue to run on the remaining motor. Higher current through remaining motor will trip current overload switch.	No effect.	3
			Fails Shorted	Higher current will flow through one bridge motor than the other. Bridge motor with higher current will trip overload switch or will overheat which will be detected by motor overheat sensors. Drive will be disabled if overheat occurs.	No effect.	3
None	Bridge Motor, Southwest, SouthEast	Provide torque to mechanical drive system to move bridge				

Table 23. **Electrical FMEA - Bridge Primary Mode**

System/Subsystem: 325 Ton Bridge Cranes at the Vehicle Assembly Building High Bays 1/2/3/4 / Bridge
PMN: H72-1200-01, -02
Drawing No.: EB-2508
Reference Figure: None

Find No. Part No.	Part Name	Part Function	a. Failure Mode b. Cause c. FMN d. Detection Method e. Correcting Action f. Time to Effect g. Timeframe	Failure Effect On System Performance	Failure Effect On Vehicle Systems And/Or Personnel Safety	Crit Cat
	Armature Windings	Provides torque to rotate motor output shaft	Fails Open	Loss of current path for one bridge motor. Bridge drive will continue to run on the remaining motor. Higher current through remaining motor will trip current overload switch or cause motor to overheat.	No effect.	3
			Fails Shorted	Excessive current will flow through shorted motor. BNMCM will detect instantaneous overcurrent, disabling drive and setting brakes. Excessive current will trip overload switch, disabling drive, or Delta Tau motion control board will detect following error.	No effect.	3
	Field Windings	Provides static magnetic field for armature magnetic field to work against	Fails Open	Loss of torque from one bridge motor. Bridge drive will continue to run on the remaining motor. Higher current through remaining motor will trip current overload switch or cause motor to overheat.	No effect.	3
			Fails Shorted	Excessive current will flow through field windings of one motor. BSMCM will detect field overcurrent fault, disabling drive and setting brakes.	No effect.	3
BSFBR1	Bridge North Field Balancing Resistor	Balances bridge motor field current between southwest and southEast bridge motors	Fails Open	Current path for windings will not be complete. BSMCM will fault on field current loss. Motors will not develop torque. Delta Tau will detect following error. Bridge drive will be disabled and brakes will set.	No effect.	3

Table 23. **Electrical FMEA - Bridge Primary Mode**

System/Subsystem: 325 Ton Bridge Cranes at the Vehicle Assembly Building High Bays 1/2/3/4 / Bridge
PMN: H72-1200-01, -02
Drawing No.: EB-2508
Reference Figure: None

Find No. Part No.	Part Name	Part Function	a. Failure Mode b. Cause c. FMN d. Detection Method e. Correcting Action f. Time to Effect g. Timeframe	Failure Effect On System Performance	Failure Effect On Vehicle Systems And/Or Personnel Safety	Crit Cat
			Fails Closed	Field current imbalance will exist between north motors, causing one motor to develop higher torque. Will cause BNWOL or BNEOL to trip.	No effect.	3
None	Switch	Contacts close to energize PLC inputs to select speed range	Fails Open (single contact)	Bridge will operate in slow speed. PLC software requires all four PLC inputs work properly to enable fast speed. Speed defaults to slow range.	No effect.	3
			Fails Closed (single contact)	Bridge will operate in slow speed. PLC software requires all four PLC inputs work properly to enable fast speed. Speed defaults to slow range.	No effect.	3
GI:09,IN1	PLC Input %I241	Energizes when fast speed range is selected	Fails De-energized	Bridge will operate in slow speed. PLC software requires all four PLC inputs work properly to enable fast speed. Speed defaults to slow range.	No effect.	3
			Fails Energized	Bridge will operate in slow speed. PLC software requires all four PLC inputs work properly to enable fast speed. Speed defaults to slow range.	No effect.	3
GI:10,IN1	PLC Input %I257	Energizes when fast speed range is selected	Fails De-energized	Bridge will operate in slow speed. PLC software requires all four PLC inputs work properly to enable fast speed. Speed defaults to slow range.	No effect.	3

Table 23. **Electrical FMEA - Bridge Primary Mode**

System/Subsystem: 325 Ton Bridge Cranes at the Vehicle Assembly Building High Bays 1/2/3/4 / Bridge
PMN: H72-1200-01, -02
Drawing No.: EB-2508
Reference Figure: None

Find No. Part No.	Part Name	Part Function	a. Failure Mode b. Cause c. FMN d. Detection Method e. Correcting Action f. Time to Effect g. Timeframe	Failure Effect On System Performance	Failure Effect On Vehicle Systems And/Or Personnel Safety	Crit Cat
			Fails Energized	Bridge will operate in slow speed. PLC software requires all four PLC inputs work properly to enable fast speed. Speed defaults to slow range.	No effect.	3
GI:09,IN2	PLC Input %I242	Energizes when slow speed range is selected	Fails De-energized	Bridge will operate in slow speed. PLC software requires all four PLC inputs work properly to enable fast speed. Speed defaults to slow range.	No effect.	3
			Fails Energized	Bridge will operate in slow speed. PLC software requires all four PLC inputs work properly to enable fast speed. Speed defaults to slow range.	No effect.	3
GI:10,IN2	PLC Input %I258	Energizes when slow speed range is selected	Fails De-energized	Bridge will operate in slow speed. PLC software requires all four PLC inputs work properly to enable fast speed. Speed defaults to slow range.	No effect.	3
			Fails Energized	Bridge will operate in slow speed. PLC software requires all four PLC inputs work properly to enable fast speed. Speed defaults to slow range.	No effect.	3
None	Master Switch	Provides interface from operator to command direction and speed of bridge	* see component Brake down below			

Table 23. **Electrical FMEA - Bridge Primary Mode**

System/Subsystem: 325 Ton Bridge Cranes at the Vehicle Assembly Building High Bays 1/2/3/4 / Bridge
PMN: H72-1200-01, -02
Drawing No.: EB-2508
Reference Figure: None

Find No. Part No.	Part Name	Part Function	a. Failure Mode b. Cause c. FMN d. Detection Method e. Correcting Action f. Time to Effect g. Timeframe	Failure Effect On System Performance	Failure Effect On Vehicle Systems And/Or Personnel Safety	Crit Cat
	* Thumb Switch	Contacts close to energize PLC inputs, commanding release of bridge brakes	Fails Open	Thumb Switch will not release bridge brakes.	No effect.	3
			Fails Closed	Bridge brakes will set when thumb switch is released. PLC wrong direction check will be disabled. Requires further failure cause bridge to operate in direction other than commanded.	No effect.	3
	* West	Contacts close to energize PLC inputs, commanding west direction of travel	Fails Open (single contact)	Bridge will not operate in direction commanded. PLC requires both direction inputs to enable drive.	No effect.	3
			Fails Closed (single contact)	Loss of master switch 0.5 volt check when master switch is in the neutral position. Requires multiple failures for master switch to output higher than expected voltage.	No effect.	3
	* East	Contacts close to energize PLC inputs, commanding East direction of travel	Fails Open (single contact)	Bridge will not operate in direction commanded. PLC requires both direction inputs to enable drive.	No effect.	3
			Fails Closed (single contact)	Loss of master switch 0.5 volt check when master switch is in the neutral position. Requires multiple failures for master switch to output higher than expected voltage.	No effect.	3

Table 23. **Electrical FMEA - Bridge Primary Mode**

System/Subsystem: 325 Ton Bridge Cranes at the Vehicle Assembly Building High Bays 1/2/3/4 / Bridge
PMN: H72-1200-01, -02
Drawing No.: EB-2508
Reference Figure: None

Find No. Part No.	Part Name	Part Function	a. Failure Mode b. Cause c. FMN d. Detection Method e. Correcting Action f. Time to Effect g. Timeframe	Failure Effect On System Performance	Failure Effect On Vehicle Systems And/Or Personnel Safety	Crit Cat
	* 5K Potentiometer	Provides 0 to 10 volt DC signal to PLC inputs commanding speed	Fails Open	Loss of speed command voltage to PLC inputs. PLC will scale speed command to minimum speed in range selected. Bridge will move in direction commanded at minimum speed when motion is commanded with the master switch.	No effect.	3
			Fails Short	Short will cause an overload of power supply 10PS. Overload will cause FU15 to blow and result in a loss of power to power supply 10PS. Loss of voltage will be detected by 10VSAR. 10VSAR drop out control power, disabling crane and setting all brakes.	No effect.	3
GI:09,IN3	PLC Input %I243	Energizes when Thumbswitch contact closes, commanding bridge brake release	Fails De-energized	Thumbswitch will not release bridge brakes.	No effect.	3
			Fails Energized	Bridge brakes will set when thumbswitch is released. PLC wrong direction check will be disabled. Requires further failures to cause bridge to operate in direction other than commanded.	No effect.	3
GI:10,IN3	PLC Input %I259	Energizes when Thumbswitch contact closes, commanding bridge brake release	Fails De-energized	Thumbswitch will not release bridge brakes.	No effect.	3

Table 23. **Electrical FMEA - Bridge Primary Mode**

System/Subsystem: 325 Ton Bridge Cranes at the Vehicle Assembly Building High Bays 1/2/3/4 / Bridge
PMN: H72-1200-01, -02
Drawing No.: EB-2508
Reference Figure: None

Find No. Part No.	Part Name	Part Function	a. Failure Mode b. Cause c. FMN d. Detection Method e. Correcting Action f. Time to Effect g. Timeframe	Failure Effect On System Performance	Failure Effect On Vehicle Systems And/Or Personnel Safety	Crit Cat
			Fails Energized	Bridge brakes will set when thumbswitch is released. PLC wrong direction check will be disabled. Requires further failures to cause bridge to operate in direction other than commanded.	No effect.	3
GI:09,IN4	PLC Input %I244	Energizes when west contact closes, commanding west direction of travel	Fails De-energized	Bridge will not operate in direction commanded. PLC requires both direction inputs to enable drive.	No effect.	3
			Fails Energized	Loss of master switch 0.5 volt check when master switch is in the neutral position. Requires multiple failures for master switch to output higher than expected voltage.	No effect.	3
GI:10,IN4	PLC Input %I260	Energizes when west contact closes, commanding west direction of travel	Fails De-energized	Bridge will not operate in direction commanded. PLC requires both direction inputs to enable drive.	No effect.	3
			Fails Energized	No effect. PLC requires other north direction input to command motion and direction.	No effect.	3
GI:09,IN5	PLC Input %I245	Energizes when west contact closes, commanding west direction of travel	Fails De-energized	Bridge will not operate in direction commanded. PLC requires both direction inputs to enable drive.	No effect.	3

Table 23. **Electrical FMEA - Bridge Primary Mode**

System/Subsystem: 325 Ton Bridge Cranes at the Vehicle Assembly Building High Bays 1/2/3/4 / Bridge
PMN: H72-1200-01, -02
Drawing No.: EB-2508
Reference Figure: None

Find No. Part No.	Part Name	Part Function	a. Failure Mode b. Cause c. FMN d. Detection Method e. Correcting Action f. Time to Effect g. Timeframe	Failure Effect On System Performance	Failure Effect On Vehicle Systems And/Or Personnel Safety	Crit Cat
			Fails Energized	Loss of master switch 0.5 volt check when master switch is in the neutral position. Requires multiple failures for master switch to output higher than expected voltage.	No effect.	3
GI:10,IN5	PLC Input %I261	Energizes when East contact closes, commanding East direction of travel	Fails De-energized	Bridge will not operate in direction commanded. PLC requires both direction inputs to enable drive.	No effect.	3
			Fails Energized	No effect. PLC requires other south direction input to command motion and direction.	No effect.	3
GI:02,IN2	PLC Input %AI22	Analog input for speed commanded	Fails Low or No Output	PLC will detect difference between two inputs. PLC will disable bridge drive and set brakes.	No effect.	3
			Fails High Input	PLC will detect difference between two inputs. PLC will disable bridge drive and set brakes.	No effect.	3
GI:04,IN2	PLC Input %AI30	Analog input for speed commanded	Fails Low or No Output	PLC will detect difference between two inputs. PLC will disable bridge drive and set brakes.	No effect.	3
			Fails High Input	PLC will detect difference between two inputs. PLC will disable bridge drive and set brakes.	No effect.	3

Table 23. **Electrical FMEA - Bridge Primary Mode**

System/Subsystem: 325 Ton Bridge Cranes at the Vehicle Assembly Building High Bays 1/2/3/4 / Bridge
PMN: H72-1200-01, -02
Drawing No.: EB-2508
Reference Figure: None

Find No. Part No.	Part Name	Part Function	a. Failure Mode b. Cause c. FMN d. Detection Method e. Correcting Action f. Time to Effect g. Timeframe	Failure Effect On System Performance	Failure Effect On Vehicle Systems And/Or Personnel Safety	Crit Cat
None	Switch	Contacts close to energize PLC inputs to select North, Both or South drive enable	Fails Open	Bridge will not operate. Brakes will remain set. PLC requires drive select input to enable selected drive and set configuration of armature and field circuits. This switch is used only if previous failures have disabled one drive.	No effect.	3
			Fails Closed	This switch is used only if previous failures have disabled one drive. PLC will detect switch not matching circuit Breakers and disable bridge drive.	No effect.	3
BTCH	Bridge Tach Change Relay	Energizes in north drive mode to alternate PLC tachometer input source. North Tach in north drive only mode, South Tach in both and south drive only mode.	Fails De-energized	No effect unless South Tach is inoperative. PLC will detect mismatch between encoder and tachometer feedback. PLC will disable drive and set brakes.	No effect.	3
			Fails Energized	No effect unless North Tach is inoperative. PLC will detect mismatch between encoder and tachometer feedback. PLC will disable drive and set brakes.	No effect.	3
BTCH-44E26 -44E28	Contacts, Normally Closed	Connects south tach to PLC in BOTH and SOUTH drive only modes	Fails Open	Loss of PLC tach input. PLC will detect mismatch between encoder and tachometer feedback. PLC will disable drive and set brakes.	No effect.	3
			Fails Closed	No effect.	No effect.	3

Table 23. **Electrical FMEA - Bridge Primary Mode**

System/Subsystem: 325 Ton Bridge Cranes at the Vehicle Assembly Building High Bays 1/2/3/4 / Bridge
PMN: H72-1200-01, -02
Drawing No.: EB-2508
Reference Figure: None

Find No. Part No.	Part Name	Part Function	a. Failure Mode b. Cause c. FMN d. Detection Method e. Correcting Action f. Time to Effect g. Timeframe	Failure Effect On System Performance	Failure Effect On Vehicle Systems And/Or Personnel Safety	Crit Cat
BTCH-43E26 -43E28	Contacts, Normally Open	Connects north tach to PLC in NORTH drive only mode	Fails Open	Loss of PLC tach input. PLC will detect mismatch between encoder and tachometer feedback. PLC will disable drive and set brakes.	No effect.	3
			Fails Closed	No effect.	No effect.	3
I:2,4,A3	PLC Input %I131	Energizes when North drive only is selected	Fails De-energized	Bridge will not operate. Brakes will remain set. PLC requires drive select input to enable selected drive and set configuration of armature and field circuits. This switch is used only if previous failures disabled one drive.	No effect.	3
			Fails Energized	This switch is used only if previous failures have disabled one drive. PLC will detect switch not matching circuit Breakers and disable bridge drive.	No effect.	3
I:2,4,A4	PLC Input %I132	Energizes when Both drives are selected	Fails De-energized	Bridge will not operate. Brakes will remain set. PLC requires drive select input to enable selected drive and set configuration of armature and field circuits. This switch is used only if previous failures disabled one drive.	No effect.	3
			Fails Energized	This switch is used only if previous failures have disabled one drive. PLC will detect switch not matching circuit Breakers and disable bridge drive.	No effect.	3

Table 23. **Electrical FMEA - Bridge Primary Mode**

System/Subsystem: 325 Ton Bridge Cranes at the Vehicle Assembly Building High Bays 1/2/3/4 / Bridge
PMN: H72-1200-01, -02
Drawing No.: EB-2508
Reference Figure: None

Find No. Part No.	Part Name	Part Function	a. Failure Mode b. Cause c. FMN d. Detection Method e. Correcting Action f. Time to Effect g. Timeframe	Failure Effect On System Performance	Failure Effect On Vehicle Systems And/Or Personnel Safety	Crit Cat
I:2,4,A5	PLC Input %I133	Energizes when South drive only is selected	Fails De-energized	Bridge will not operate. Brakes will remain set. PLC requires drive select input to enable selected drive and set configuration of armature and field circuits. This switch is used only if previous failures disabled one drive.	No effect.	3
			Fails Energized	This switch is used only if previous failures have disabled one drive. PLC will detect switch not matching circuit Breakers and disable bridge drive.	No effect.	3
I:2,4,C4	PLC Input %I148	Input de-energizes when bridge northwest overload switch detects excessive current	Fails De-energized	PLC input will remain de-energized. PLC will disable drive and set brakes.	No effect.	3
			Fails Energized	Excessive current can flow through associated motor. Motor will overheat. Motor overheat sensors will detect condition and disable drive. Delta Tau will continue to servo motor to commanded speed. If speed does not match speed commanded, Delta Tau will disable drive and set brakes.	No effect.	3
I:2,4,C4	PLC Input %I149	Input de-energizes when bridge northEast overload switch detects excessive current	Fails De-energized	PLC input will remain de-energized. PLC will disable drive and set brakes.	No effect.	3

Table 23. **Electrical FMEA - Bridge Primary Mode**

System/Subsystem: 325 Ton Bridge Cranes at the Vehicle Assembly Building High Bays 1/2/3/4 / Bridge
PMN: H72-1200-01, -02
Drawing No.: EB-2508
Reference Figure: None

Find No. Part No.	Part Name	Part Function	a. Failure Mode b. Cause c. FMN d. Detection Method e. Correcting Action f. Time to Effect g. Timeframe	Failure Effect On System Performance	Failure Effect On Vehicle Systems And/Or Personnel Safety	Crit Cat
			Fails Energized	Excessive current can flow through associated motor. Motor will overheat. Motor overheat sensors will detect condition and disable drive. Delta Tau will continue to servo motor to commanded speed. If speed does not match speed commanded, Delta Tau will disable drive and set brakes.	No effect.	3
I:2,4,C6	PLC Input %I150	Input de-energizes when bridge southwest overload switch detects excessive current	Fails De-energized	PLC input will remain de-energized. PLC will disable drive and set brakes.	No effect.	3
			Fails Energized	Excessive current can flow through associated motor. Motor will overheat. Motor overheat sensors will detect condition and disable drive. Delta Tau will continue to servo motor to commanded speed. If speed does not match speed commanded, Delta Tau will disable drive and set brakes.	No effect.	3
I:2,4,C7	PLC Input %I151	Input de-energizes when bridge southEast overload switch detects excessive current	Fails De-energized	PLC input will remain de-energized. PLC will disable drive and set brakes.	No effect.	3

Table 23. **Electrical FMEA - Bridge Primary Mode**

System/Subsystem: 325 Ton Bridge Cranes at the Vehicle Assembly Building High Bays 1/2/3/4 / Bridge
PMN: H72-1200-01, -02
Drawing No.: EB-2508
Reference Figure: None

Find No. Part No.	Part Name	Part Function	a. Failure Mode b. Cause c. FMN d. Detection Method e. Correcting Action f. Time to Effect g. Timeframe	Failure Effect On System Performance	Failure Effect On Vehicle Systems And/Or Personnel Safety	Crit Cat
			Fails Energized	Excessive current can flow through associated motor. Motor will overheat. Motor overheat sensors will detect condition and disable drive. Delta Tau will continue to servo motor to commanded speed. If speed does not match speed commanded, Delta Tau will disable drive and set brakes.	No effect.	3
None	Bridge West Final Limit Switch	Switch opens when bridge reaches west end of travel	Fails Open	Bridge will not run in the west direction.	No effect.	3
			Fails Closed	Bridge motion can continue at slow speed west until bridge contacts mechanical hard stops.	No effect.	3
I:2,3,D1	PLC Input %I121	Input de-energizes when bridge trips west final limit switch	Fails De-energized	Bridge will not run in the west direction.	No effect.	3
			Fails Energized	Bridge motion can continue at slow speed west until bridge contacts mechanical hard stops.	No effect.	3
None	Bridge West Slow Down Limit Switch	Switch opens when bridge reaches west end of area where high speed travel is allowed	Fails Open	Bridge will run west only in slow speed.	No effect.	3
			Fails Closed	Bridge can continue west in fast speed range until west final limit switch is tripped when bridge will be prevented from further travel west.	No effect.	3

Table 23. **Electrical FMEA - Bridge Primary Mode**

System/Subsystem: 325 Ton Bridge Cranes at the Vehicle Assembly Building High Bays 1/2/3/4 / Bridge
PMN: H72-1200-01, -02
Drawing No.: EB-2508
Reference Figure: None

Find No. Part No.	Part Name	Part Function	a. Failure Mode b. Cause c. FMN d. Detection Method e. Correcting Action f. Time to Effect g. Timeframe	Failure Effect On System Performance	Failure Effect On Vehicle Systems And/Or Personnel Safety	Crit Cat
I:2,5,C3	PLC Input %I179	Input de-energizes when bridge trips west slow down limit switch	Fails De-energized	Bridge will run west only in slow speed.	No effect.	3
			Fails Energized	Bridge can continue west in fast speed range until west final limit switch is tripped when bridge will be prevented from further travel west.	No effect.	3
None	Bridge East Final Limit Switch	Switch opens when bridge reaches East end of travel	Fails Open	Bridge will not run in the East direction.	No effect.	3
			Fails Closed	Bridge motion can continue at slow speed East until bridge bumpers contact 250 Ton Bridge Crane.	No effect.	3
I:2,3,D2	PLC Input %I122	Input de-energizes when bridge trips East final limit switch	Fails De-energized	Bridge will not run in the East direction.	No effect.	3
			Fails Energized	Bridge motion can continue at slow speed East until bridge bumpers contact 250 Ton Bridge Crane.	No effect.	3
None	Bridge East Slow Down Limit Switch	Switch opens when bridge reaches East end of area where high speed travel is allowed	Fails Open	Bridge will run East only in slow speed.	No effect.	3
			Fails Closed	Bridge can continue East in fast speed range until East final limit switch is tripped when bridge will be prevented from further travel East.	No effect.	3

Table 23. **Electrical FMEA - Bridge Primary Mode**

System/Subsystem: 325 Ton Bridge Cranes at the Vehicle Assembly Building High Bays 1/2/3/4 / Bridge
PMN: H72-1200-01, -02
Drawing No.: EB-2508
Reference Figure: None

Find No. Part No.	Part Name	Part Function	a. Failure Mode b. Cause c. FMN d. Detection Method e. Correcting Action f. Time to Effect g. Timeframe	Failure Effect On System Performance	Failure Effect On Vehicle Systems And/Or Personnel Safety	Crit Cat
I:2,5,C4	PLC Input %I180	Input de-energizes when bridge trips East slow down limit switch	Fails De-energized	Bridge will run East only in slow speed.	No effect.	3
			Fails Energized	Bridge can continue East in fast speed range until East final limit switch is tripped when bridge will be prevented from further travel East.	No effect.	3
I:2,4,D5	PLC Input %I157	Input de-energizes when bridge northwest blower overload switch detects excessive current	Fails De-energized	PLC Input will remain de-energized. PLC will disable drive and set brakes.	No effect.	3
			Fails Energized	Excessive current can flow through associated motor. Motor will overheat. Motor overheat sensors will detect condition and disable drive. Delta Tau will continue to servo motor to commanded speed. If speed does not match speed commanded, Delta Tau will disable drive and set brakes.	No effect.	3
I:2,4,D6	PLC Input %I158	Input de-energizes when bridge northEast blower overload switch detects excessive current	Fails De-energized	PLC Input will remain de-energized. PLC will disable drive and set brakes.	No effect.	3

Table 23. **Electrical FMEA - Bridge Primary Mode**

System/Subsystem: 325 Ton Bridge Cranes at the Vehicle Assembly Building High Bays 1/2/3/4 / Bridge
PMN: H72-1200-01, -02
Drawing No.: EB-2508
Reference Figure: None

Find No. Part No.	Part Name	Part Function	a. Failure Mode b. Cause c. FMN d. Detection Method e. Correcting Action f. Time to Effect g. Timeframe	Failure Effect On System Performance	Failure Effect On Vehicle Systems And/Or Personnel Safety	Crit Cat
			Fails Energized	Excessive current can flow through associated motor. Motor will overheat. Motor overheat sensors will detect condition and disable drive. Delta Tau will continue to servo motor to commanded speed. If speed does not match speed commanded, Delta Tau will disable drive and set brakes.	No effect.	3
I:2,4,D7	PLC Input %I159	Input de-energizes when bridge southwest blower overload switch detects excessive current	Fails De-energized	PLC Input will remain de-energized. PLC will disable drive and set brakes.	No effect.	3
			Fails Energized	Excessive current can flow through associated motor. Motor will overheat. Motor overheat sensors will detect condition and disable drive. Delta Tau will continue to servo motor to commanded speed. If speed does not match speed commanded, Delta Tau will disable drive and set brakes.	No effect.	3
I:2,4,D8	PLC Input %I160	Input de-energizes when bridge southEast blower overload switch detects excessive current	Fails De-energized	PLC Input will remain de-energized. PLC will disable drive and set brakes.	No effect.	3

Table 23. **Electrical FMEA - Bridge Primary Mode**

System/Subsystem: 325 Ton Bridge Cranes at the Vehicle Assembly Building High Bays 1/2/3/4 / Bridge
PMN: H72-1200-01, -02
Drawing No.: EB-2508
Reference Figure: None

Find No. Part No.	Part Name	Part Function	a. Failure Mode b. Cause c. FMN d. Detection Method e. Correcting Action f. Time to Effect g. Timeframe	Failure Effect On System Performance	Failure Effect On Vehicle Systems And/Or Personnel Safety	Crit Cat
			Fails Energized	Excessive current can flow through associated motor. Motor will overheat. Motor overheat sensors will detect condition and disable drive. Delta Tau will continue to servo motor to commanded speed. If speed does not match speed commanded, Delta Tau will disable drive and set brakes.	No effect.	3
BNDC	Relay	Energizes when bridge north drive is enabled	Fails De-energized	DC loop for north bridge motors will not be closed and BNFSA will not enable BNMCM. Bridge north drive will not operate. Applicable to BOTH and NORTH drive mode only. No effect in SOUTH drive mode.	No effect.	3
			Fails Energized	Bridge DC motor loop will remain closed. PLC will control BNMCM and brakes. Bridge will operate normally.	No effect.	3
BNDC-43Q13 -43Q22	Contacts	Close to complete bridge north armature current loop	Fails Open	Bridge DC motor loop will not be closed. Bridge will not run. Applicable to BOTH and NORTH drive mode only. No effect in SOUTH drive mode.	No effect.	3
			Fails Closed	No effect. Will not compete a circuit.	No effect.	3

Table 23. **Electrical FMEA - Bridge Primary Mode**

System/Subsystem: 325 Ton Bridge Cranes at the Vehicle Assembly Building High Bays 1/2/3/4 / Bridge
PMN: H72-1200-01, -02
Drawing No.: EB-2508
Reference Figure: None

Find No. Part No.	Part Name	Part Function	a. Failure Mode b. Cause c. FMN d. Detection Method e. Correcting Action f. Time to Effect g. Timeframe	Failure Effect On System Performance	Failure Effect On Vehicle Systems And/Or Personnel Safety	Crit Cat
BNDC-49M27	Contacts	Close to enable bridge north fault sense assembly	Fails Open	BNFSA will not enable BNMCM. Bridge will not run. Applicable to BOTH and NORTH drive mode only. No effect in SOUTH drive mode.	No effect.	3
			Fails Closed	Relay BNDE will disable BNMCM and other BNDC contact will interrupt bridge motor DC current loop. Bridge will operate normally.	No effect.	3
BSDC	Relay	Energizes when bridge south drive is enabled	Fails De-energized	DC loop for south bridge motors will not be closed and BSFSA will not enable BSMCM. Bridge south drive will not operate. Applicable to BOTH and SOUTH drive mode only. No effect in NORTH drive mode.	No effect.	3
			Fails Energized	Bridge DC motor loop will remain closed. PLC will control BSMCM and brakes. Bridge will operate normally.	No effect.	3
BSDC-44Q13 -44Q22	Contacts	Close to complete bridge south armature current loop	Fails Open	Bridge DC motor loop will not be closed. Bridge will not run. Applicable to BOTH and SOUTH drive mode only. No effect in NORTH drive mode.	No effect.	3
			Fails Closed	No effect. Will not compete a circuit.	No effect.	3

Table 23. **Electrical FMEA - Bridge Primary Mode**

System/Subsystem: 325 Ton Bridge Cranes at the Vehicle Assembly Building High Bays 1/2/3/4 / Bridge
PMN: H72-1200-01, -02
Drawing No.: EB-2508
Reference Figure: None

Find No. Part No.	Part Name	Part Function	a. Failure Mode b. Cause c. FMN d. Detection Method e. Correcting Action f. Time to Effect g. Timeframe	Failure Effect On System Performance	Failure Effect On Vehicle Systems And/Or Personnel Safety	Crit Cat
BSDC-50M27	Contact	Close to enable Bridge South Fault Sense Assembly	Fails Open	BSFSA will not enable BSMCM. Bridge will not run. Applicable to BOTH and SOUTH drive mode only. No effect in NORTH drive mode.	No effect.	3
			Fails Closed	Relay BSDE will disable BSMCM and other BSDC contact will interrupt bridge motor DC current loop. Bridge will operate normally.	No effect.	3
O:2,2,B3	PLC Output %Q91	Output energizes relay BDC, Bridge One Drive Loop Contactor. This component is for continuous use if failures have disabled one drive	Fails De-energized	Armature loop for two of the four bridge motors will not be complete. Bridge will skew on crane rails. Delta Tau motion controller will detect following error or PLC will detect encoder loss, disabling remaining drive and setting brakes.	No effect.	3
			Fails Energized	BNMCM and BSMCM armature current loops will be connected. Motor control modules or Delta Tau motion controller will detect error if erratic motion occurs, disabling drives and setting brakes.	No effect.	3
O:2,2,B4	PLC Output %Q92	Output energizes relay BDC, Bridge One Drive Loop Contactor. This component is for continuous use if failures have disabled one drive	Fails De-energized	Armature loop for two of the four bridge motors will not be complete. Bridge will skew on crane rails. Delta Tau motion controller will detect following error or PLC will detect encoder loss, disabling remaining drive and setting brakes.	No effect.	3

Table 23. **Electrical FMEA - Bridge Primary Mode**

System/Subsystem: 325 Ton Bridge Cranes at the Vehicle Assembly Building High Bays 1/2/3/4 / Bridge
PMN: H72-1200-01, -02
Drawing No.: EB-2508
Reference Figure: None

Find No. Part No.	Part Name	Part Function	a. Failure Mode b. Cause c. FMN d. Detection Method e. Correcting Action f. Time to Effect g. Timeframe	Failure Effect On System Performance	Failure Effect On Vehicle Systems And/Or Personnel Safety	Crit Cat
			Fails Energized	BNMCM and BSMCM armature current loops will be connected. Motor control modules or Delta Tau motion controller will detect error if erratic motion occurs, disabling drives and setting brakes.	No effect.	3
BDC	Relay	Energizes when bridge single drive operation is selected	Fails De-energized	Armature loop for two of the four bridge motors will not be complete. Bridge will skew on crane rails. Delta Tau motion controller will detect following error or PLC will detect encoder loss, disabling remaining drive and setting brakes.	No effect.	3
			Fails Energized	BNMCM and BSMCM armature current loops will be connected. Motor control modules or Delta Tau motion controller will detect error if erratic motion occurs, disabling drives and setting brakes.	No effect.	3
BDC-43R14 -43R21	Contacts	Close to tie North and South bridge motor armature current loops together for single drive operation	Fails Open	Armature loop for two of the four bridge motors will not be complete. Bridge will skew on crane rails. Delta Tau motion controller will detect following error or PLC will detect encoder loss, disabling remaining drive and setting brakes.	No effect.	3
			Fails Closed	BNMCM and BSMCM armature current loops will be connected. Motor control modules or Delta Tau motion controller will detect error if erratic motion occurs, disabling drives and setting brakes.	No effect.	3

Table 23. **Electrical FMEA - Bridge Primary Mode**

System/Subsystem: 325 Ton Bridge Cranes at the Vehicle Assembly Building High Bays 1/2/3/4 / Bridge
PMN: H72-1200-01, -02
Drawing No.: EB-2508
Reference Figure: None

Find No. Part No.	Part Name	Part Function	a. Failure Mode b. Cause c. FMN d. Detection Method e. Correcting Action f. Time to Effect g. Timeframe	Failure Effect On System Performance	Failure Effect On Vehicle Systems And/Or Personnel Safety	Crit Cat
O:2,2,D1	PLC Output %Q105	Supplies power to energize bridge north drive enable relay	Fails De-energized	Relay BNDE will not energize. BNMCM will not be enabled, brake will (remain) set.	No effect.	3
			Fails Energized	No effect. Relay BNDE will not energize until other PLC output energizes. If relay BNDE energizes when south drive is selected, PLC will detect error and disable bridge.	No effect.	3
O:1,9,A3	PLC Output %Q67	Supplies power to energize bridge north drive enable relay	Fails De-energized	Relay BNDE will not energize. BNMCM will not be enabled, brake will (remain) set.	No effect.	3
			Fails Energized	No effect. Relay BNDE will not energize until other PLC output energizes. If relay BNDE energizes when south drive is selected, PLC will detect error and disable bridge.	No effect.	3
I:2,3,D3	PLC Input %I123	Input energizes when power is supplied to bridge north drive enable relay	Fails De-energized	PLC would detect relay BNDE not energized and set error bit. PLC will not enable BNMCM or release brakes.	No effect.	3
			Fails Energized	BNMCM will be disabled. Relay BNDE will de-energize relay BNDC, opening DC motor armature loop. PLC will not set brakes until zero speed achieved by Delta Tau motion controller or Delta Tau detects following error.	No effect.	3

Table 23. **Electrical FMEA - Bridge Primary Mode**

System/Subsystem: 325 Ton Bridge Cranes at the Vehicle Assembly Building High Bays 1/2/3/4 / Bridge
PMN: H72-1200-01, -02
Drawing No.: EB-2508
Reference Figure: None

Find No. Part No.	Part Name	Part Function	a. Failure Mode b. Cause c. FMN d. Detection Method e. Correcting Action f. Time to Effect g. Timeframe	Failure Effect On System Performance	Failure Effect On Vehicle Systems And/Or Personnel Safety	Crit Cat
BNDE	Bridge North Drive Enable Relay	Energizes when PLC enables drive, drive is ready, and a fault condition does not exist	Fails De-energized	BNDE will not energize relays BNDC or BDC to complete DC motor armature loop. Bridge drive will not operate in BOTH or NORTH only drive modes.	No effect.	3
			Fails Energized	BNMCM will be disabled by internal fault. PLC input will cause brakes to set.	No effect.	3
BNDE-46K16	Contact	Closes to energize relay BNDC	Fails Open	BNDE will not energize relay BNDC to complete DC motor armature loop. Bridge drive will not operate.	No effect.	3
			Fails Closed	BNDE contact will disable BNMCM. PLC input will cause PLC to set brakes.	No effect.	3
BNDE-46K18	Contact	Closes to energize relay BDC in conjunction with PLC output	Fails Open	Armature loop for two of the four bridge motors will not be complete. Bridge will skew on crane rails. Delta Tau motion controller will detect following error or PLC will detect encoder loss, disabling remaining drive and setting brakes.	No effect.	3
			Fails Closed	BNMCM and BSMCM armature current loops will be connected. Motor control modules or Delta Tau motion controller will detect error if erratic motion occurs, disabling drives and setting brakes.	No effect.	3
BNDE-49K25	Contact	Closes to drive enable input of BNMCM	Fails Open	BNMCM will not be enabled. Bridge drive will not run.	No effect.	3

Table 23. **Electrical FMEA - Bridge Primary Mode**

System/Subsystem: 325 Ton Bridge Cranes at the Vehicle Assembly Building High Bays 1/2/3/4 / Bridge
PMN: H72-1200-01, -02
Drawing No.: EB-2508
Reference Figure: None

Find No. Part No.	Part Name	Part Function	a. Failure Mode b. Cause c. FMN d. Detection Method e. Correcting Action f. Time to Effect g. Timeframe	Failure Effect On System Performance	Failure Effect On Vehicle Systems And/Or Personnel Safety	Crit Cat
			Fails Closed	Other contact will de-energize relay BNDC, opening DC motor armature loop. PLC input will cause brakes to be set.	No effect.	3
O:2,2,D2	PLC Output %106	Supplies power to energize bridge south drive enable relay	Fails De-Energized	Relay BSDE will not energize, BSMCM will not be enabled, brake will (remain) set.	No effect.	3
			Fails Energized	No effect. Relay BSDE will not energize until other PLC output energizes. If relay BSDE energizes when south drive is selected, PLC will detect error and disable bridge.	No effect.	3
O:1,9,B1	PLC Output %Q68	Supplies power to energize Bridge South Drive Enable relay	Fails De-Energized	Relay BSDE will not energize, BSMCM will not be enabled, brake will (remain) set.	No effect.	3
			Fails Energized	No effect. Relay BNDE will not energize until other PLC output energizes. If relay BNDE energizes when south drive is selected, PLC will detect error and disable bridge.	No effect.	3
I:2,3,D4	PLC Input %I124	Input energizes when power is supplied to Bridge South Drive enable relay	Fails De-Energized	PLC would detect relay BSDE not energized and set error bit. PLC will not enable BSMCM or release brakes.	No effect.	3

Table 23. **Electrical FMEA - Bridge Primary Mode**

System/Subsystem: 325 Ton Bridge Cranes at the Vehicle Assembly Building High Bays 1/2/3/4 / Bridge
PMN: H72-1200-01, -02
Drawing No.: EB-2508
Reference Figure: None

Find No. Part No.	Part Name	Part Function	a. Failure Mode b. Cause c. FMN d. Detection Method e. Correcting Action f. Time to Effect g. Timeframe	Failure Effect On System Performance	Failure Effect On Vehicle Systems And/Or Personnel Safety	Crit Cat
			Fails Energized	BSMCM will be disabled, relay BSDE will de-energize relay BSDC, opening DC motor armature loop. PLC will not set brakes until zero speed achieved by Delta Tau motion controller or Delta Tau detects following error.	No effect.	3
BSDE	Bridge South Drive Enable Relay	Energizes when PLC enables drive, drive is ready and a fault condition does not exist	Fails De-Energized	BSDE will not energize relays BSDC or BDC to complete DC motor armature loop. Bridge drive will not operate.	No effect.	3
			Fails Energized	BSMCM will be disabled by internal fault. PLC input will cause brakes to be set.	No effect.	3
BSDE-46K17	Contact	Closes to energize relay BSDC	Fails Open	BSDE will not energize relay BSDC to complete DC motor armature loop. Bridge drive will not operate.	No effect.	3
			Fails Closed	BSDE contact will disable BSMCM. PLC input will cause PLC to set brakes.	No effect.	3
BSDE-46K19	Contact	Closes to energize relay BDC in conjunction with PLC output	Fails Open	Armature loop for two of the four bridge motors will not be complete. Bridge will skew on crane rails. Delta Tau motion controller will detect following error or PLC will detect encoder loss, disabling remaining drive and setting brakes.	No effect.	3

Table 23. **Electrical FMEA - Bridge Primary Mode**

System/Subsystem: 325 Ton Bridge Cranes at the Vehicle Assembly Building High Bays 1/2/3/4 / Bridge
PMN: H72-1200-01, -02
Drawing No.: EB-2508
Reference Figure: None

Find No. Part No.	Part Name	Part Function	a. Failure Mode b. Cause c. FMN d. Detection Method e. Correcting Action f. Time to Effect g. Timeframe	Failure Effect On System Performance	Failure Effect On Vehicle Systems And/Or Personnel Safety	Crit Cat
			Fails Closed	BNMCM and BSMCM armature current loops will be connected. Motor control modules or Delta Tau motion controller will detect error if erratic motion occurs, disabling drives and setting brakes.	No effect.	3
BSDE-50M25	Contact	Closes to drive enable input of BSMCM	Fails Open	BSMCM will not be enabled. Bridge drive will not run.	No effect.	3
			Fails Closed	Other contact will de-energize relay BSDC, opening DC motor armature loop. PLC input will cause brakes to be set.	No effect.	3
O:1,7,D1	PLC Output %Q125	Supplies power to energize bridge brake contactor relay	Fails De-Energized	Bridge brakes will not release. Bridge drive will attempt to drive through brakes. Will cause following error in Delta Tau motion control board resulting in PLC disabling drive.	No effect.	3
			Fails Energized	Associated PLC output will de-energize brake relay, setting brakes.	No effect.	3
O:1,9,B2	PLC Output %Q69	Supplies power to energize Bridge Brake Contactor Relay	Fails De-Energized	Bridge brakes will not release. Bridge drive will attempt to drive through brakes. Will cause following error in Delta Tau motion control board resulting in PLC disabling drive.	No effect.	3
			Fails Energized	Associated PLC output will de-energize brake relay, setting brakes.	No effect.	3

Table 23. **Electrical FMEA - Bridge Primary Mode**

System/Subsystem: 325 Ton Bridge Cranes at the Vehicle Assembly Building High Bays 1/2/3/4 / Bridge
PMN: H72-1200-01, -02
Drawing No.: EB-2508
Reference Figure: None

Find No. Part No.	Part Name	Part Function	a. Failure Mode b. Cause c. FMN d. Detection Method e. Correcting Action f. Time to Effect g. Timeframe	Failure Effect On System Performance	Failure Effect On Vehicle Systems And/Or Personnel Safety	Crit Cat
BBR	Bridge Brake Contactor Relay	Energizes when PLC outputs supply power to release bridge brakes	Fails De-Energized	Bridge brakes will not release. Bridge drive will attempt to drive through brakes. Delta Tau motion controller will detect following error if drag from brakes is excessive resulting in PLC disabling drive.	No effect.	3
			Fails Energized	Bridge brakes will not set. Bridge will stop by regenerative braking of drive.	No effect.	3
BBR-47M15 -47M16	PLC Output %Q107	Close to supply AC power to BRECT and Bridge Brakes	Fails Open	Bridge brakes will not release. Bridge drive will attempt to drive through brakes. Delta Tau motion controller will detect following error if drag from brakes is excessive resulting in PLC disabling drive.	No effect.	3
			Fails Closed	Associated contact will open circuit, setting brakes.	No effect.	3
O:2,2,D3	PLC Output %Q107	Output energizes relay BNFC1, North Drive Only Field Contactor	Fails De-Energized	Relay BNFC1 will not energize when North drive only is selected. Field current loop will not be complete. Bridge drive will not operate. This is for contingency use only requiring previous failure to disable South drive.	No effect.	3

Table 23. **Electrical FMEA - Bridge Primary Mode**

System/Subsystem: 325 Ton Bridge Cranes at the Vehicle Assembly Building High Bays 1/2/3/4 / Bridge
PMN: H72-1200-01, -02
Drawing No.: EB-2508
Reference Figure: None

Find No. Part No.	Part Name	Part Function	a. Failure Mode b. Cause c. FMN d. Detection Method e. Correcting Action f. Time to Effect g. Timeframe	Failure Effect On System Performance	Failure Effect On Vehicle Systems And/Or Personnel Safety	Crit Cat
			Fails Energized	Relay BNFC1 will remain energized. No effect during BOTH drive operation. BNMCM F1 and BSMCM F1 will be connected during South Drive Only operation. Will cause error in BSMCM disabling drive and setting brakes.	No effect.	3
BNFC1	Relay, North Drive Only Field Contactor	Energizes when North Drive Only is selected	Fails De-Energized	Contact will not close when North Drive only is selected. Field current loop will not be complete. Bridge drive will not be complete. Bridge drive will not operate. No effect in backup mode.	No effect.	3
			Fails Energized	No effect during BOTH drive operation. BNMCM F1 and BSMCM F1 will be connected during South drive only operation. Will cause error in BSMCM disabling drive and setting brakes.	No effect.	3
BNFC1-43S23	Contact	Closes to switch bridge motor field circuit configuration to North Drive Only	Fails Open	Field current loop will not be complete. Bridge drive will not operate. No effect in backup mode.	No effect.	3
			Fails Closed	No effect during BOTH drive operation. BNMCM F1 and BSMCM F1 will be connected during South drive only operation. Will cause error in BSMCM disabling drive and setting brakes.	No effect.	3

Table 23. **Electrical FMEA - Bridge Primary Mode**

System/Subsystem: 325 Ton Bridge Cranes at the Vehicle Assembly Building High Bays 1/2/3/4 / Bridge
PMN: H72-1200-01, -02
Drawing No.: EB-2508
Reference Figure: None

Find No. Part No.	Part Name	Part Function	a. Failure Mode b. Cause c. FMN d. Detection Method e. Correcting Action f. Time to Effect g. Timeframe	Failure Effect On System Performance	Failure Effect On Vehicle Systems And/Or Personnel Safety	Crit Cat
O:2,2,D4	PLC Output %Q108	Output energizes relay BNFC2, North Drive Only or Both Drives Field Contactor	Fails De-Energized	Relay BNFC2 will not energize when North Drive Only or Both drives operating is selected. Field current loop will not be complete. Bridge drive will not operate.	No effect.	3
			Fails Energized	Relay BNFC2 will remain energized. No effect during Both Drive operation. BNMCM F2 and BSMCM F2 will be connected during South Drive Only operation. Will cause error in BSMCM disabling drive and setting brakes.	No effect.	3
BNFC2	Relay, North Drive Only or Both Drives Field Contactor	Energizes when North Drive Only or Both Drives is selected	Fails De-Energized	Contact will not close when North Drive Only or Both Drives is selected. Field current loop will not be complete. Bridge drive will not operate.	No effect.	3
			Fails Energized	Relay BNFC2 will remain energized. No effect during Both Drive operation. BNMCM F2 and BSMCM F2 will be connected during South Drive Only operation. Will cause error in BSMCM disabling drive and setting brakes.	No effect.	3
BNFC2-43Q26	Contact	Closes to switch bridge motor field current configuration to North drive only or Both drives operating	Fails Open	Field current loop will not be complete. Bridge drive will not operate.	No effect.	3

Table 23. **Electrical FMEA - Bridge Primary Mode**

System/Subsystem: 325 Ton Bridge Cranes at the Vehicle Assembly Building High Bays 1/2/3/4 / Bridge
PMN: H72-1200-01, -02
Drawing No.: EB-2508
Reference Figure: None

Find No. Part No.	Part Name	Part Function	a. Failure Mode b. Cause c. FMN d. Detection Method e. Correcting Action f. Time to Effect g. Timeframe	Failure Effect On System Performance	Failure Effect On Vehicle Systems And/Or Personnel Safety	Crit Cat
			Fails Closed	No effect during Both Drive operation. BNMCM F2 and BSMCM F2 will be connected during South Drive only operation. Will cause error in BSMCM disabling drive and setting brakes.	No effect.	3
O:2,2,D5	PLC Output %Q109	Output energizes relay BFC1, North Drive Only or South Drive Only field contactor	Fails De-Energized	Relay BFC1 will not be energized when North Drive Only or South Drive only is selected. Field current loop will not be complete, bridge drive will not operate.	No effect.	3
			Fails Energized	Relay BFC1 will remain energized when Both Drive operation is selected. BNMCM F1, 2 and BSMCM F1, 2 will be connected. Will cause fault in BNMCM or BSMCM, disabling drive and setting brakes.	No effect.	3
BFC1	Relay, North Drive Only or South Drive Only Field Contactor	Energizes when North Drive only or South Drive only is selected	Fails De-Energized	Contacts will not close when North Drive only or South Drive only is selected. Field current loop will not be complete. Bridge will not operate.	No effect.	3
			Fails Energized	Contacts will remain closed when Both Drive operation is selected. BNMCM F1, 2 and BSMCM F1, 2 will be connected. Will cause fault in BNMCM or BSMCM, disabling drive and setting brakes.	No effect.	3

Table 23. **Electrical FMEA - Bridge Primary Mode**

System/Subsystem: 325 Ton Bridge Cranes at the Vehicle Assembly Building High Bays 1/2/3/4 / Bridge
PMN: H72-1200-01, -02
Drawing No.: EB-2508
Reference Figure: None

Find No. Part No.	Part Name	Part Function	a. Failure Mode b. Cause c. FMN d. Detection Method e. Correcting Action f. Time to Effect g. Timeframe	Failure Effect On System Performance	Failure Effect On Vehicle Systems And/Or Personnel Safety	Crit Cat
BFC1-43V24 -43V28 -44V24	Contacts	Close to switch bridge motor field circuit configuration to North Drive only or South Drive only	Fails Open	Field current loop will not be complete. Bridge drive will not operate.	No effect.	3
			Fails Closed	BNMCM F1, 2 and BSMCM F1, 2 will be connected. Will cause fault in BNMCM or BSMCM, disabling drive and setting brakes.	No effect.	3
O;2,2,D6	PLC Output %Q110	Output energizes relay BFC2, Both Drives operating field contactor. This component is for contingency use only	Fails De-Energized	Relay BFC2 will be de-energized, contacts will open field current loops, disabling Both Drive operating mode. North Only or South Only drive select will function.	No effect.	3
			Fails Energized	Relay BFC2 will remain energized when selecting North Only or South Only drive operation. BNMCM F1 and BSMCM F1 will be connected. Will cause fault in BNMCM or BSMCM, disabling drive and setting brakes.	No effect.	3
BFC2	Relay, Both Drives Operating Field Contactor	Energizes when Both Drives are selected. This component is for contingency use only.	Fails De-Energized	Contacts will open field current loops, disabling Both Drive operating mode. North Only or South Only drive select will function.	No effect.	3

Table 23. **Electrical FMEA - Bridge Primary Mode**

System/Subsystem: 325 Ton Bridge Cranes at the Vehicle Assembly Building High Bays 1/2/3/4 / Bridge
PMN: H72-1200-01, -02
Drawing No.: EB-2508
Reference Figure: None

Find No. Part No.	Part Name	Part Function	a. Failure Mode b. Cause c. FMN d. Detection Method e. Correcting Action f. Time to Effect g. Timeframe	Failure Effect On System Performance	Failure Effect On Vehicle Systems And/Or Personnel Safety	Crit Cat
			Fails Energized	Contacts will remain closed when selecting North Only or South Only drive operation. BNMCM F1 and BSMCM F1 will be connected. Will cause fault in BNMCM or BSMCM, disabling drive and setting brakes.	No effect.	3
BFC2-43R24 -44R24	Contacts	Close to switch Bridge motor Field circuit configuration to Both Drives operating	Fails Open	Field current loops will open, disabling Both Drive operating mode. North Only or South Only drive select will function.	No effect.	3
			Fails Closed	BNMCM F1 and BSMCM F1 will be connected. Will cause fault in BNMCM or BSMCM, disabling drive and setting brakes. Requires previous failure to disable North or South Drive.	No effect.	3
O:2,2,D7	PLC Output %Q111	Output energizes relay BSFC1, South Drive Only field contactor	Fails De-Energized	Relay BSFC1 will not energize when South Drive Only is selected. Field current loop will not be complete. Bridge drive will not operate.	No effect.	3
			Fails Energized	Relay BSFC1 will remain energized. No effect during Both Drive operation. BNMCM F1 and BSMCM F1 will be connected during North Drive Only operation. Will cause error in BNMCM disabling drive and setting brakes.	No effect.	3

Table 23. **Electrical FMEA - Bridge Primary Mode**

System/Subsystem: 325 Ton Bridge Cranes at the Vehicle Assembly Building High Bays 1/2/3/4 / Bridge
PMN: H72-1200-01, -02
Drawing No.: EB-2508
Reference Figure: None

Find No. Part No.	Part Name	Part Function	a. Failure Mode b. Cause c. FMN d. Detection Method e. Correcting Action f. Time to Effect g. Timeframe	Failure Effect On System Performance	Failure Effect On Vehicle Systems And/Or Personnel Safety	Crit Cat
BSFC1	Relay, South Drive Only field contactor	Energizes when South Drive Only is selected	Fails De-Energized	Contact will not close when South Drive Only is selected. Field current loop will not be complete. Bridge drive will not operate.	No effect.	3
			Fails Energized	Contact will remain closed. No effect during Both Drive operation. BNMCM F1 and BSMCM F1 will be connected during North Drive Only operation. Will cause error in BNMCM disabling drive and setting brakes.	No effect.	3
BSFC1-44S23	Contact	Closes to switch bridge motor field circuit configuration to South Drive Only	Fails Open	When South Drive Only is selected, field current loop will not be complete. Bridge drive will not operate.	No effect.	3
			Fails Closed	No effect during Both Drive operation. BNMCM F1 and BSMCM F1 will be connected during North Drive Only operation. Will cause error in BNMCM disabling drive and setting brakes.	No effect.	3
O:2,2,D8	PLC Output %Q112	Output energizes relay BSFC2, South Drive Only or Both Drives field contactor	Fails De-Energized	Relay BNFC2 will not energize when North Drive Only or Both Drives operating is selected. Field current loop will not be complete. Bridge drive will not operate.	No effect.	3

Table 23. **Electrical FMEA - Bridge Primary Mode**

System/Subsystem: 325 Ton Bridge Cranes at the Vehicle Assembly Building High Bays 1/2/3/4 / Bridge
PMN: H72-1200-01, -02
Drawing No.: EB-2508
Reference Figure: None

Find No. Part No.	Part Name	Part Function	a. Failure Mode b. Cause c. FMN d. Detection Method e. Correcting Action f. Time to Effect g. Timeframe	Failure Effect On System Performance	Failure Effect On Vehicle Systems And/Or Personnel Safety	Crit Cat
			Fails Energized	Relay BNFC2 will remain energized. No effect during Both Drive operation. BNMCM F2 and BSMCM F2 will be connected during South Drive Only operation. Will cause error in BSMCM disabling drive and setting brakes.	No effect.	3
BSFC2	Relay, South Drive Only or Both Drives Operating field contactor	Energizes when South Drive Only or Both Drives is selected	Fails De-Energized	Contact will not close when South Drive Only or Both Drives is selected. Field current loop will not be complete. Bridge drive will not operate.	No effect.	3
			Fails Energized	Relay BSFC2 will remain energized. No effect during Both Drive operation. BNMCM F2 and BSMCM F2 will be connected during North Drive Only operation. Will cause error in BNMCM disabling drive and setting brakes.	No effect.	3
BSFC2-44Q26	Contact	Closes to switch bridge motor field circuit configuration to South Drive Only or Both Drives operating	Fails Open	When South Drive Only or Both Drives is selected, field current loop will not be complete. Bridge drive will not operate.	No effect.	3
			Fails Closed	No effect during Both Drive operation. BNMCM F2 and BSMCM F2 will be connected during North Drive Only operation. Will cause error in BNMCM disabling drive and setting brakes.	No effect.	3

Table 23. **Electrical FMEA - Bridge Primary Mode**

System/Subsystem: 325 Ton Bridge Cranes at the Vehicle Assembly Building High Bays 1/2/3/4 / Bridge
PMN: H72-1200-01, -02
Drawing No.: EB-2508
Reference Figure: None

Find No. Part No.	Part Name	Part Function	a. Failure Mode b. Cause c. FMN d. Detection Method e. Correcting Action f. Time to Effect g. Timeframe	Failure Effect On System Performance	Failure Effect On Vehicle Systems And/Or Personnel Safety	Crit Cat
None	Position Display Source Select	Energizes PLC input to select North encoder as position display data source	Fails Open	Loss of ability to switch from South encoder to North encoder as position display source.	No effect.	3
			Fails Closed	Loss of ability to switch from North encoder to South encoder as position display source.	No effect.	3
GI:06,IN8	PLC Input %I248	Input energizes when North motor encoder is selected for position display data source	Fails De-Energized	Loss of ability to switch from South encoder to North encoder as position display source.	No effect.	3
			Fails Energized	Loss of ability to switch from North encoder to South encoder as position display source.	No effect.	3
None	Bridge display reset push button, momentary contact	Energizes PLC input to reset position display to zero	Fails Open	Unable to reset bridge position display to zero	No effect.	3
			Fails Closed	Bridge display will lock-up with indicator needle blanked out and digital readout showing ---.- to alert operator that display is stuck in reset mode.	No effect.	3
GI:06,IN9	PLC Input %I249	Input energizes when display reset push button is pressed	Fails De-Energized	Unable to reset bridge position display to zero	No effect.	3

Table 23. **Electrical FMEA - Bridge Primary Mode**

System/Subsystem: 325 Ton Bridge Cranes at the Vehicle Assembly Building High Bays 1/2/3/4 / Bridge
PMN: H72-1200-01, -02
Drawing No.: EB-2508
Reference Figure: None

Find No. Part No.	Part Name	Part Function	a. Failure Mode b. Cause c. FMN d. Detection Method e. Correcting Action f. Time to Effect g. Timeframe	Failure Effect On System Performance	Failure Effect On Vehicle Systems And/Or Personnel Safety	Crit Cat
			Fails Energized	Bridge display will lock-up with indicator needle blanked out and digital readout showing ---.- to alert operator that display is stuck in reset mode.	No effect.	3
O:2,2,B6	PLC Output %Q94	Output supplies power to energize relay NNWBS, North Control Northwest Motor Blower Starter Relay	Fails De-Energized	Blower motor will not run. Bridge drive motor sensors will warn operator if motor start to overheat. If motor does overheat, PLC will disable drive and set brakes.	No effect.	3
			Fails Energized	Blower will remain running continuously.	No effect.	3
NNWBS	North Control Northwest Blower Starter Relay	Energizes when PLC output energizes to start bridge motor blowers	Fails De-Energized	Blower motor will not run. Bridge drive motor sensors will warn operator if motor start to overheat. If motor does overheat, PLC will disable drive and set brakes.	No effect.	3
			Fails Energized	Blower will remain running continuously.	No effect.	3
NNWBS-43N01 -43N02 -43N03	Contacts	Close to supply power to northwest blower motor	Fails De-Energized	Blower motor will not run. Bridge drive motor sensors will warn operator if motor start to overheat. If motor does overheat, PLC will disable drive and set brakes.	No effect.	3
			Fails Energized	Blower will remain running continuously.	No effect.	3

Table 23. **Electrical FMEA - Bridge Primary Mode**

System/Subsystem: 325 Ton Bridge Cranes at the Vehicle Assembly Building High Bays 1/2/3/4 / Bridge
PMN: H72-1200-01, -02
Drawing No.: EB-2508
Reference Figure: None

Find No. Part No.	Part Name	Part Function	a. Failure Mode b. Cause c. FMN d. Detection Method e. Correcting Action f. Time to Effect g. Timeframe	Failure Effect On System Performance	Failure Effect On Vehicle Systems And/Or Personnel Safety	Crit Cat
O:2,2,B7	PLC Output %Q95	Output supplies power to energize relay SNWBS, South Control Northwest Motor Blower Starter Relay	Fails De-Energized	Blower motor will not run. Bridge drive motor sensors will warn operator if motor start to overheat. If motor does overheat, PLC will disable drive and set brakes.	No effect.	3
			Fails Energized	Blower will remain running continuously. Bridge North and South circuits will be connected through blower circuits, bypassing isolation transformers. Noise spikes or interference that causes a line imbalance will be detected by fault sense assemblies. Delta Tau motion control board will detect any uncommanded motion and shut down bridge.	No effect.	3
SNWBS	South Control Northwest Blower Starter Relay	Energizes when PLC output energizes to start bridge motor blowers	Fails De-Energized	Blower motor will not run. Bridge drive motor sensors will warn operator if motor starts to overheat. If motor does overheat, PLC will disable drive and set brakes.	No effect.	3
			Fails Energized	Blower will remain running continuously. Bridge north and south circuits will be connected through blower circuits, bypassing isolation transformers. Noise spikes or interference that causes a line imbalance will be detected by Fault Sense Assemblies. Delta Tau motion control board will detect any uncommanded motion and shut down bridge.	No effect.	3

Table 23. **Electrical FMEA - Bridge Primary Mode**

System/Subsystem: 325 Ton Bridge Cranes at the Vehicle Assembly Building High Bays 1/2/3/4 / Bridge
PMN: H72-1200-01, -02
Drawing No.: EB-2508
Reference Figure: None

Find No. Part No.	Part Name	Part Function	a. Failure Mode b. Cause c. FMN d. Detection Method e. Correcting Action f. Time to Effect g. Timeframe	Failure Effect On System Performance	Failure Effect On Vehicle Systems And/Or Personnel Safety	Crit Cat
SNWBS-44N01 -44N02 -44N03	Contacts	Close to supply power to northwest blower motor	Fails De-Energized	Blower motor will not run. Bridge drive motor sensors will warn operator if motor starts to overheat. If motor does overheat, PLC will disable drive and set brakes.	No effect.	3
			Fails Energized	Blower will remain running continuously. Bridge north and south circuits will be connected through blower circuits, bypassing isolation transformers. Noise spikes or interference that causes a line imbalance will be detected by Fault Sense Assemblies. Delta Tau motion control board will detect any uncommanded motion and shut down bridge.	No effect.	3
O:2,2,B8	PLC Output %Q96	Output supplies power to energize relay NNEBS, North Control NorthEast Motor Blower Starter Relay	Fails De-Energized	Blower motor will not run. Bridge drive motor sensors will warn operator if motor starts to overheat. If motor does overheat, PLC will disable drive and set brakes.	No effect.	3
			Fails Energized	Blower will remain running continuously.	No effect.	3
NNEBS	North Control NorthEast Blower Starter Relay	Energizes when PLC output energizes to start bridge motor blowers	Fails De-Energized	Blower motor will not run. Bridge drive motor sensors will warn operator if motor starts to overheat. If motor does overheat, PLC will disable drive and set brakes.	No effect.	3
			Fails Energized	Blower will remain running continuously.	No effect.	3

Table 23. **Electrical FMEA - Bridge Primary Mode**

System/Subsystem: 325 Ton Bridge Cranes at the Vehicle Assembly Building High Bays 1/2/3/4 / Bridge
PMN: H72-1200-01, -02
Drawing No.: EB-2508
Reference Figure: None

Find No. Part No.	Part Name	Part Function	a. Failure Mode b. Cause c. FMN d. Detection Method e. Correcting Action f. Time to Effect g. Timeframe	Failure Effect On System Performance	Failure Effect On Vehicle Systems And/Or Personnel Safety	Crit Cat
NNEBS-43N04 -43N05 -43N06	Contacts	Close to supply power to NorthEast Blower Motor	Fails De-Energized	Blower motor will not run. Bridge drive motor sensors will warn operator if motor starts to overheat. If motor does overheat, PLC will disable drive and set brakes.	No effect.	3
			Fails Energized	Blower will remain running continuously	No effect.	3
O:2,2,C6	PLC Output %Q102	Output supplies power to energize relay SNEBS, South control NorthEast Motor Blower Starter Relay	Fails De-Energized	Blower motor will not run. Bridge drive motor sensors will warn operator if motor starts to overheat. If motor does overheat, PLC will disable drive and set brakes.	No effect.	3
			Fails Energized	Blower will remain running continuously. Bridge north and south circuits will be connected through blower circuits, bypassing isolation transformers. Noise spikes or interference that causes a line imbalance will be detected by Fault Sense Assemblies. Delta Tau motion control board will detect any uncommanded motion and shut down bridge.	No effect.	3
SNEBS	South Control NorthEast Blower Starter Relay	Energizes when PLC output energizes to start bridge motor blowers	Fails De-Energized	Blower motor will not run. Bridge drive motor sensors will warn operator if motor starts to overheat. If motor does overheat, PLC will disable drive and set brakes.	No effect.	3

Table 23. **Electrical FMEA - Bridge Primary Mode**

System/Subsystem: 325 Ton Bridge Cranes at the Vehicle Assembly Building High Bays 1/2/3/4 / Bridge
PMN: H72-1200-01, -02
Drawing No.: EB-2508
Reference Figure: None

Find No. Part No.	Part Name	Part Function	a. Failure Mode b. Cause c. FMN d. Detection Method e. Correcting Action f. Time to Effect g. Timeframe	Failure Effect On System Performance	Failure Effect On Vehicle Systems And/Or Personnel Safety	Crit Cat
			Fails Energized	Blower will remain running continuously. Bridge north and south circuits will be connected through blower circuits, bypassing isolation transformers. Noise spikes or interference that causes a line imbalance will be detected by Fault Sense Assemblies. Delta Tau motion control board will detect any uncommanded motion and shut down bridge.	No effect.	3
SNEBS-44N04 -44N05 -44N06	Contacts	Close to supply power to northEast blower motor	Fails De-Energized	Blower motor will not run. Bridge drive motor sensors will warn operator if motor starts to overheat. If motor does overheat, PLC will disable drive and set brakes.	No effect.	3
			Fails Energized	Blower will remain running continuously. Bridge north and south circuits will be connected through blower circuits, bypassing isolation transformers. Noise spikes or interference that causes a line imbalance will be detected by Fault Sense Assemblies. Delta Tau motion control board will detect any uncommanded motion and shut down bridge.	No effect.	3
O:2,2,C2	PLC Output %Q98	Output supplies power to energize relay NSWBS, North Control Southwest Motor Blower Starter Relay	Fails De-Energized	Blower motor will not run. Bridge drive motor sensors will warn operator if motor starts to overheat. If motor does overheat, PLC will disable drive and set brakes.	No effect.	3

Table 23. **Electrical FMEA - Bridge Primary Mode**

System/Subsystem: 325 Ton Bridge Cranes at the Vehicle Assembly Building High Bays 1/2/3/4 / Bridge
PMN: H72-1200-01, -02
Drawing No.: EB-2508
Reference Figure: None

Find No. Part No.	Part Name	Part Function	a. Failure Mode b. Cause c. FMN d. Detection Method e. Correcting Action f. Time to Effect g. Timeframe	Failure Effect On System Performance	Failure Effect On Vehicle Systems And/Or Personnel Safety	Crit Cat
			Fails Energized	Blower will remain running continuously. Bridge north and south circuits will be connected through blower circuits, bypassing isolation transformers. Noise spikes or interference that causes a line imbalance will be detected by Fault Sense Assemblies. Delta Tau motion control board will detect any uncommanded motion and shut down bridge.	No effect.	3
NSWBS	North Control Southwest Blower Starter Relay	Energizes when PLC output energizes to start Bridge Motor Blowers	Fails De-Energized	Blower motor will not run. Bridge drive motor sensors will warn operator if motor starts to overheat. If motor does overheat, PLC will disable drive and set brakes.	No effect.	3
			Fails Energized	Blower will remain running continuously. Bridge north and south circuits will be connected through blower circuits, bypassing isolation transformers. Noise spikes or interference that causes a line imbalance will be detected by Fault Sense Assemblies. Delta Tau motion control board will detect any uncommanded motion and shut down bridge.	No effect.	3
NSWBS-43R07 -43R08 -43R09	Contacts	Close to supply power to southwest blower motor	Fails De-Energized	Blower motor will not run. Bridge drive motor sensors will warn operator if motor starts to overheat. If motor does overheat, PLC will disable drive and set brakes.	No effect.	3

Table 23. **Electrical FMEA - Bridge Primary Mode**

System/Subsystem: 325 Ton Bridge Cranes at the Vehicle Assembly Building High Bays 1/2/3/4 / Bridge
PMN: H72-1200-01, -02
Drawing No.: EB-2508
Reference Figure: None

Find No. Part No.	Part Name	Part Function	a. Failure Mode b. Cause c. FMN d. Detection Method e. Correcting Action f. Time to Effect g. Timeframe	Failure Effect On System Performance	Failure Effect On Vehicle Systems And/Or Personnel Safety	Crit Cat
			Fails Energized	Blower will remain running continuously. Bridge north and south circuits will be connected through blower circuits, bypassing isolation transformers. Noise spikes or interference that causes a line imbalance will be detected by Fault Sense Assemblies. Delta Tau motion control board will detect any uncommanded motion and shut down bridge.	No effect.	3
O:2,2,C3	PLC Output %Q99	Output supplies power to energize relay SSWBS, South Control Southwest Motor Blower Starter Relay	Fails De-Energized	Blower motor will not run. Bridge drive motor sensors will warn operator if motor starts to overheat. If motor does overheat, PLC will disable drive and set brakes.	No effect.	3
			Fails Energized	Blower will remain running continuously. Bridge north and south circuits will be connected through blower circuits, bypassing isolation transformers. Noise spikes or interference that causes a line imbalance will be detected by Fault Sense Assemblies. Delta Tau motion control board will detect any uncommanded motion and shut down bridge.	No effect.	3
SSWBS	South Control Southwest Blower Starter Relay	Energizes when PLC output energizes to start Bridge Motor Blowers	Fails De-Energized	Blower motor will not run. Bridge drive motor sensors will warn operator if motor starts to overheat. If motor does overheat, PLC will disable drive and set brakes.	No effect.	3

Table 23. **Electrical FMEA - Bridge Primary Mode**

System/Subsystem: 325 Ton Bridge Cranes at the Vehicle Assembly Building High Bays 1/2/3/4 / Bridge
PMN: H72-1200-01, -02
Drawing No.: EB-2508
Reference Figure: None

Find No. Part No.	Part Name	Part Function	a. Failure Mode b. Cause c. FMN d. Detection Method e. Correcting Action f. Time to Effect g. Timeframe	Failure Effect On System Performance	Failure Effect On Vehicle Systems And/Or Personnel Safety	Crit Cat
			Fails Energized	Blower will remain running continuously. Bridge north and south circuits will be connected through blower circuits, bypassing isolation transformers. Noise spikes or interference that causes a line imbalance will be detected by Fault Sense Assemblies. Delta Tau motion control board will detect any uncommanded motion and shut down bridge.	No effect.	3
SSWBS-44R07 -44R08 -44R09	Contacts	Close to supply power to southwest blower motor	Fails De-Energized	Blower motor will not run. Bridge drive motor sensors will warn operator if motor starts to overheat. If motor does overheat, PLC will disable drive and set brakes.	No effect.	3
			Fails Energized	Blower will remain running continuously. Bridge north and south circuits will be connected through blower circuits, bypassing isolation transformers. Noise spikes or interference that causes a line imbalance will be detected by Fault Sense Assemblies. Delta Tau motion control board will detect any uncommanded motion and shut down bridge.	No effect.	3
O:2,2,C4	PLC Output %Q100	Output supplies power to energize relay NSEBS, North Control SouthEast Motor Blower Starter Relay	Fails De-Energized	Blower motor will not run. Bridge drive motor sensors will warn operator if motor starts to overheat. If motor does overheat, PLC will disable drive and set brakes.	No effect.	3

Table 23. **Electrical FMEA - Bridge Primary Mode**

System/Subsystem: 325 Ton Bridge Cranes at the Vehicle Assembly Building High Bays 1/2/3/4 / Bridge
PMN: H72-1200-01, -02
Drawing No.: EB-2508
Reference Figure: None

Find No. Part No.	Part Name	Part Function	a. Failure Mode b. Cause c. FMN d. Detection Method e. Correcting Action f. Time to Effect g. Timeframe	Failure Effect On System Performance	Failure Effect On Vehicle Systems And/Or Personnel Safety	Crit Cat
			Fails Energized	Blower will remain running continuously. Bridge north and south circuits will be connected through blower circuits, bypassing isolation transformers. Noise spikes or interference that causes a line imbalance will be detected by Fault Sense Assemblies. Delta Tau motion control board will detect any uncommanded motion and shut down bridge.	No effect.	3
NSEBS	North Control SouthEast Blower Starter Relay	Energizes when PLC output energizes to start Bridge Motor Blowers	Fails De-Energized	Blower motor will not run. Bridge drive motor sensors will warn operator if motor starts to overheat. If motor does overheat, PLC will disable drive and set brakes.	No effect.	3
			Fails Energized	Blower will remain running continuously. Bridge north and south circuits will be connected through blower circuits, bypassing isolation transformers. Noise spikes or interference that causes a line imbalance will be detected by Fault Sense Assemblies. Delta Tau motion control board will detect any uncommanded motion and shut down bridge.	No effect.	3
NSEBS-43R10 -43R11 -43R12	Contacts	Close to supply power to southEast blower motor	Fails De-Energized	Blower motor will not run. Bridge drive motor sensors will warn operator if motor starts to overheat. If motor does overheat, PLC will disable drive and set brakes.	No effect.	3

Table 23. **Electrical FMEA - Bridge Primary Mode**

System/Subsystem: 325 Ton Bridge Cranes at the Vehicle Assembly Building High Bays 1/2/3/4 / Bridge
PMN: H72-1200-01, -02
Drawing No.: EB-2508
Reference Figure: None

Find No. Part No.	Part Name	Part Function	a. Failure Mode b. Cause c. FMN d. Detection Method e. Correcting Action f. Time to Effect g. Timeframe	Failure Effect On System Performance	Failure Effect On Vehicle Systems And/Or Personnel Safety	Crit Cat
			Fails Energized	Blower will remain running continuously. Bridge north and south circuits will be connected through blower circuits, bypassing isolation transformers. Noise spikes or interference that causes a line imbalance will be detected by Fault Sense Assemblies. Delta Tau motion control board will detect any uncommanded motion and shut down bridge.	No effect.	3
O:2,2,C5	PLC Output %Q101	Output supplies power to energize relay SSEBS, South Control SouthEast Motor Blower Starter Relay	Fails De-Energized	Blower motor will not run. Bridge drive motor sensors will warn operator if motor starts to overheat. If motor does overheat, PLC will disable drive and set brakes.	No effect.	3
			Fails Energized	Blower will remain running continuously. Bridge north and south circuits will be connected through blower circuits, bypassing isolation transformers. Noise spikes or interference that causes a line imbalance will be detected by Fault Sense Assemblies. Delta Tau motion control board will detect any uncommanded motion and shut down bridge.	No effect.	3
SSEBS	South Control SouthEast Blower Starter Relay	Energizes when PLC output energizes to start bridge motor blowers	Fails De-Energized	Blower motor will not run. Bridge drive motor sensors will warn operator if motor starts to overheat. If motor does overheat, PLC will disable drive and set brakes.	No effect.	3

Table 23. **Electrical FMEA - Bridge Primary Mode**

System/Subsystem: 325 Ton Bridge Cranes at the Vehicle Assembly Building High Bays 1/2/3/4 / Bridge
PMN: H72-1200-01, -02
Drawing No.: EB-2508
Reference Figure: None

Find No. Part No.	Part Name	Part Function	a. Failure Mode b. Cause c. FMN d. Detection Method e. Correcting Action f. Time to Effect g. Timeframe	Failure Effect On System Performance	Failure Effect On Vehicle Systems And/Or Personnel Safety	Crit Cat
			Fails Energized	Blower will remain running continuously. Bridge north and south circuits will be connected through blower circuits, bypassing isolation transformers. Noise spikes or interference that causes a line imbalance will be detected by Fault Sense Assemblies. Delta Tau motion control board will detect any uncommanded motion and shut down bridge.	No effect.	3
SSEBS-44R10 -44R11 -44R12	Contacts	Close to supply power to southEast blower motor	Fails De-Energized	Blower motor will not run. Bridge drive motor sensors will warn operator if motor starts to overheat. If motor does overheat, PLC will disable drive and set brakes.	No effect.	3
			Fails Energized	Blower will remain running continuously. Bridge north and south circuits will be connected through blower circuits, bypassing isolation transformers. Noise spikes or interference that causes a line imbalance will be detected by Fault Sense Assemblies. Delta Tau motion control board will detect any uncommanded motion and shut down bridge.	No effect.	3
BBFU1, BBFU2	Fuse 10A	Protects circuitry from overloads in bridge brake circuit	Fails to Operate	Associated fuse or upstream circuit Breaker will protect circuitry	No effect.	3

Table 23. **Electrical FMEA - Bridge Primary Mode**

System/Subsystem: 325 Ton Bridge Cranes at the Vehicle Assembly Building High Bays 1/2/3/4 / Bridge
PMN: H72-1200-01, -02
Drawing No.: EB-2508
Reference Figure: None

Find No. Part No.	Part Name	Part Function	a. Failure Mode b. Cause c. FMN d. Detection Method e. Correcting Action f. Time to Effect g. Timeframe	Failure Effect On System Performance	Failure Effect On Vehicle Systems And/Or Personnel Safety	Crit Cat
			Prematurely Operates	Loss of power to release brakes. Bridge drive will attempt drive through brakes. Delta Tau motion control board will detect following error and disable drive.	No effect.	3
BBT	Transformer	Converts 480 VAC to 120 VAC for Bridge Brake circuit	Fails Open	Loss of power to release brakes. Bridge drive will attempt drive through brakes. Delta Tau motion control board will detect following error and disable drive.	No effect.	3
			Fails Shorted	TBFU1, TBFU2, TBFU3 and TMOV will protect circuitry from overload. Loss of power to release brakes. Bridge drive will attempt drive through brakes. Delta Tau motion control board will detect following error and disable drive.	No effect.	3
BBFU3	Fuse 10A	Protects circuitry from overloads in Bridge Brake circuit	Fails to Operate	TBFU1 and TBFU2 will protect against overloads. Requires previous failure to cause overload.	No effect.	3
			Prematurely Operates	Loss of power to release brakes. Bridge drive will attempt drive through brakes. Delta Tau motion control board will detect following error and disable drive.	No effect.	3

Table 23. **Electrical FMEA - Bridge Primary Mode**

System/Subsystem: 325 Ton Bridge Cranes at the Vehicle Assembly Building High Bays 1/2/3/4 / Bridge
PMN: H72-1200-01, -02
Drawing No.: EB-2508
Reference Figure: None

Find No. Part No.	Part Name	Part Function	a. Failure Mode b. Cause c. FMN d. Detection Method e. Correcting Action f. Time to Effect g. Timeframe	Failure Effect On System Performance	Failure Effect On Vehicle Systems And/Or Personnel Safety	Crit Cat
BMOV	Metal Oxide Varistor	Conducts when voltage exceeds a set level	Fails Open	Voltage spikes will damage TRECT and other circuitry causing a loss of power to release brakes. Bridge drive will attempt drive through brakes. Delta Tau motion control board will detect following error and disable drive.	No effect.	3
			Fails Shorted	TBFU1-3 will protect circuitry against overload. Loss of power to release brakes. Bridge drive will attempt drive through brakes. Delta Tau motion control board will detect following error and disable drive.	No effect.	3
BRECT	Rectifier	Converts AC power to DC power for bridge brakes coils	Fails Open	Loss of power to release brakes. Bridge drive will attempt drive through brakes. Delta Tau motion control board will detect following error and disable drive.	No effect.	3
			Fails Shorted	TBFU1-3 will protect circuitry against overload. Loss of power to release brakes. Bridge drive will attempt drive through brakes. Delta Tau motion control board will detect following error and disable drive.	No effect.	3
BBR1, BBR2, BBR3, BBR4	Resistor	Limits current in DC loop of bridge brake circuit	Fails Open	Loss of power to release associated brake. Bridge drive will attempt to drive through brake. Delta Tau motion control board will detect following error and disable drive, setting remaining brake.	No effect.	3

Table 23. **Electrical FMEA - Bridge Primary Mode**

System/Subsystem: 325 Ton Bridge Cranes at the Vehicle Assembly Building High Bays 1/2/3/4 / Bridge
PMN: H72-1200-01, -02
Drawing No.: EB-2508
Reference Figure: None

Find No. Part No.	Part Name	Part Function	a. Failure Mode b. Cause c. FMN d. Detection Method e. Correcting Action f. Time to Effect g. Timeframe	Failure Effect On System Performance	Failure Effect On Vehicle Systems And/Or Personnel Safety	Crit Cat
			Fails Shorted	Higher current will damage brake coil, resulting in brake setting. Bridge drive will attempt to drive through brake. Delta Tau motion control board will detect following error and disable drive, setting remaining brake.	No effect.	3
None	Brake Coil	Creates magnetic field to actuate bridge brake mechanism	Fails Open	Brake will not release. Bridge drive will attempt to drive through brake. PLC will detect if brake drag causes bridge to skew and halt bridge operation.	No effect.	3
			Fails Shorted	BBR1, BBR2, BBR3, or BBR4 will limit current flow in brake circuit. Failed brake will not release. Bridge motor will attempt to drive through brake. PLC will detect if brake drag causes bridge to skew and halt bridge operation.	No effect.	3
None	Northwest Motor Warning Thermistor	Provides variable resistance proportional to motor temperature	Fails Open	Motor overtemp warning on continuously	No effect.	3
			Fails Shorted	Loss of motor overtemp warning. Motor overtemp shut down will disable drive if overtemp occurs.	No effect.	3
BNWMTW	Motogard Overtemp Module	Energizes PLC input when overtemp is detected in bridge motor	Fails Low or No Output	Loss of overtemp warning. Motor overtemp shut down will disable drive if overtemp occurs.	No effect.	3
			Fails High Output	Overtemp warning light will remain on continuously	No effect.	3

Table 23. **Electrical FMEA - Bridge Primary Mode**

System/Subsystem: 325 Ton Bridge Cranes at the Vehicle Assembly Building High Bays 1/2/3/4 / Bridge
PMN: H72-1200-01, -02
Drawing No.: EB-2508
Reference Figure: None

Find No. Part No.	Part Name	Part Function	a. Failure Mode b. Cause c. FMN d. Detection Method e. Correcting Action f. Time to Effect g. Timeframe	Failure Effect On System Performance	Failure Effect On Vehicle Systems And/Or Personnel Safety	Crit Cat
None	Overtemp Warning Light	Indicates an above normal operating temperature in bridge west motor	Fails Open	Loss of overtemp warning. Motor overtemp shut down will disable drive if overtemp occurs.	No effect.	3
			Fails Shorted	When overtemp occurs, current overload will blow FU14. Bridge drive will be disabled.	No effect.	3
None	Northwest motor shutdown Thermistor	Provides variable resistance proportional to motor temperature	Fails Open	Overtemp shut down module will energize PLC input. PLC will disable bridge drive.	No effect.	3
			Fails Shorted	Loss of automatic motor overtemp shutdown. Overtemp warning light will warn of overtemp condition in motor.	No effect.	3
BNWMTS	Motogard Overtemp Module	Energizes PLC input when overtemp is detected in bridge motor	Fails Low or No Output	Loss of automatic motor overtemp shutdown. Overtemp warning light will warn of overtemp condition in motor.	No effect.	3
			Fails High Output	PLC input will be energized. PLC will disable bridge drive.	No effect.	3
I:2,4,A6	PLC Input %I134	Energized by BNWMTS when an overtemp condition occurs in bridge northwest motor	Fails De-Energized	Loss of automatic motor overtemp shutdown. Overtemp warning light will warn of overtemp condition in motor.	No effect.	3
			Fails Energized	PLC will disable bridge drive although an overtemp condition does not exist.	No effect.	3

Table 23. **Electrical FMEA - Bridge Primary Mode**

System/Subsystem: 325 Ton Bridge Cranes at the Vehicle Assembly Building High Bays 1/2/3/4 / Bridge
PMN: H72-1200-01, -02
Drawing No.: EB-2508
Reference Figure: None

Find No. Part No.	Part Name	Part Function	a. Failure Mode b. Cause c. FMN d. Detection Method e. Correcting Action f. Time to Effect g. Timeframe	Failure Effect On System Performance	Failure Effect On Vehicle Systems And/Or Personnel Safety	Crit Cat
GO:11,013	PLC Output %Q141	Sends power to bridge northwest motor overtemp indication light when overtemp occurs or indicator lights are tested	Fails De-Energized	Loss of motor overtemp shutdown indication. PLC will disable bridge drive.	No effect.	3
			Fails Energized	Bridge west motor overtemp indication light will remain illuminated continuously.	No effect.	3
None	Overtemp Shutdown Light	Indicates an above normal operating temperature in bridge northwest motor and bridge drive has been disabled	Fails Open	Loss of overtemp shutdown indication. Bridge drive will be disabled.	No effect.	3
			Fails Shorted	When overtemp occurs, current overload will blow FU14. Bridge drives will be disabled.	No effect.	3
None	NorthEast Motor Warning Thermistor	Provides variable resistance proportional to motor temperature	Fails Open	Motor overtemp warning on continuously.	No effect.	3
			Fails Shorted	Loss of motor overtemp warning. Motor overtemp shutdown will disable drive if overtemp occurs.	No effect.	3
BNEMTW	Motogard Overtemp Module	Supplies power to bridge northEast overtemp warning light when an above normal motor temperature is detected	Fails Low or No Output	Loss of overtemp warning. Motor overtemp shutdown will disable drive if overtemp occurs.	No effect.	3
			Fails High Output	Overtemp warning light will remain on continuously	No effect.	3

Table 23. **Electrical FMEA - Bridge Primary Mode**

System/Subsystem: 325 Ton Bridge Cranes at the Vehicle Assembly Building High Bays 1/2/3/4 / Bridge
PMN: H72-1200-01, -02
Drawing No.: EB-2508
Reference Figure: None

Find No. Part No.	Part Name	Part Function	a. Failure Mode b. Cause c. FMN d. Detection Method e. Correcting Action f. Time to Effect g. Timeframe	Failure Effect On System Performance	Failure Effect On Vehicle Systems And/Or Personnel Safety	Crit Cat
None	Overtemp Warning Light	Indicates an above normal operating temperature in bridge northEast motor	Fails Open	Loss of overtemp warning. Motor overtemp shutdown will disable drive if overtemp occurs.	No effect.	3
			Fails Shorted	When overtemp occurs, current overload will blow FU14. Bridge drive will be disabled.	No effect.	3
None	NorthEast Motor Shutdown Thermistor	Provides variable resistance proportional to motor temperature	Fails Open	Overtemp shutdown module will energize PLC input. PLC will disable bridge drive.	No effect.	3
			Fails Shorted	Loss of automatic motor overtemp shutdown. Overtemp warning light will warn of overtemp condition in motor.	No effect.	3
BNEMTS	Motogard overtemp Module	Energize PLC inputs when overtemp is detected in bridge motor	Fails Low or No Output	Loss of automatic motor overtemp shutdown. Overtemp warning light will warn of overtemp condition in motor.	No effect.	3
			Fails High Output	PLC input will be energized. PLC will disable bridge drive.	No effect.	3
I:2,4,A7	PLC Input %I135	Energized by BNEMTS when an overtemp condition occurs in bridge northEast motor	Fails De-Energized	Loss of automatic motor overtemp shutdown. Overtemp warning light will warn of overtemp condition in motor.	No effect.	3
			Fails Energized	PLC will disable bridge drive although an overtemp condition does not exist.	No effect.	3

Table 23. **Electrical FMEA - Bridge Primary Mode**

System/Subsystem: 325 Ton Bridge Cranes at the Vehicle Assembly Building High Bays 1/2/3/4 / Bridge
PMN: H72-1200-01, -02
Drawing No.: EB-2508
Reference Figure: None

Find No. Part No.	Part Name	Part Function	a. Failure Mode b. Cause c. FMN d. Detection Method e. Correcting Action f. Time to Effect g. Timeframe	Failure Effect On System Performance	Failure Effect On Vehicle Systems And/Or Personnel Safety	Crit Cat
GO:11,014	PLC Output %Q142	Sends power to bridge northEast motor overtemp indication light when overtemp occurs or indicator lights are tested	Fails De-Energized	Loss of motor overtemp shutdown indication. PLC will disable bridge drive.	No effect.	3
			Fails Energized	Bridge west motor overtemp indication light will remain illuminated continuously.	No effect.	3
None	Overtemp Shutdown Light	Indicates an above normal operating temperature in bridge northEast motor and bridge drive have been disabled	Fails open	Loss of overtemp shutdown indication. Bridge drive will be disabled.	No effect.	3
			Fails Shorted	When overtemp occurs, current overload will blow FU14. Bridge drives will be disabled.	No effect.	3
None	Southwest Motor Warning Thermistor	Provides variable resistance proportional to motor temperature	Fails Open	Motor overtemp warning on continuously.	No effect.	3
			Fails Shorted	Loss of motor overtemp warning. Motor overtemp shutdown will disable drive if overtemp occurs.	No effect.	3
BSWMTW	Motogard Overtemp Module	Energizes PLC input when overtemp is detected in bridge motor	Fails Low or No Output	Loss of overtemp warning. Motor overtemp shutdown will disable drive if overtemp occurs.	No effect.	3
			Fails High Output	Overtemp warning light will remain on continuously	No effect.	3

Table 23. **Electrical FMEA - Bridge Primary Mode**

System/Subsystem: 325 Ton Bridge Cranes at the Vehicle Assembly Building High Bays 1/2/3/4 / Bridge
PMN: H72-1200-01, -02
Drawing No.: EB-2508
Reference Figure: None

Find No. Part No.	Part Name	Part Function	a. Failure Mode b. Cause c. FMN d. Detection Method e. Correcting Action f. Time to Effect g. Timeframe	Failure Effect On System Performance	Failure Effect On Vehicle Systems And/Or Personnel Safety	Crit Cat
None	Overtemp Warning Light	Indicates an above normal operating temperature in bridge southwest motor	Fails Open	Loss of overtemp warning. Motor overtemp shutdown will disable drive if overtemp occurs.	No effect.	3
			Fails Shorted	When overtemp occurs, current overload will blow FU14. Bridge drive will be disabled.	No effect.	3
None	Southwest Motor Shutdown Thermistor	Provides variable resistance proportional to motor temperature	Fails Open	Overtemp shutdown module will energize PLC input. PLC will disable bridge drive.	No effect.	3
			Fails Shorted	Loss of automatic motor overtemp shutdown. Overtemp warning light will warn of overtemp condition in motor.	No effect.	3
BSWMTS PCC No. 135101	Motogard Overtemp Module	Energize PLC input when overtemp is detected in Bridge motor	Fails Low or No Output	Loss of automatic motor overtemp shutdown. Overtemp warning light will warn of overtemp condition in motor.	No effect.	3
			Fails High Output	PLC input will be energized. PLC will disable Bridge drive.	No effect.	3
I:2,4,A8	PLC Input %I136	Energized by BSWMTS when an overtemp condition occurs in Bridge Southwest motor	Fails De-Energized	Loss of automatic motor overtemp shutdown. Overtemp warning light will warn of overtemp condition in motor.	No effect.	3
			Fails Energized	PLC will disable Bridge drive although an overtemp condition does not exist.	No effect.	3

Table 23. **Electrical FMEA - Bridge Primary Mode**

System/Subsystem: 325 Ton Bridge Cranes at the Vehicle Assembly Building High Bays 1/2/3/4 / Bridge
PMN: H72-1200-01, -02
Drawing No.: EB-2508
Reference Figure: None

Find No. Part No.	Part Name	Part Function	a. Failure Mode b. Cause c. FMN d. Detection Method e. Correcting Action f. Time to Effect g. Timeframe	Failure Effect On System Performance	Failure Effect On Vehicle Systems And/Or Personnel Safety	Crit Cat
GO:11,015	PLC Output %Q143	Sends power to Bridge southwest motor overtemp indication light when overtemp occurs or indicator lights are tested	Fails De-Energized	Loss of motor overtemp shutdown indication. PLC will disable bridge drive.	No effect.	3
			Fails Energized	Bridge west motor overtemp indication light will remain illuminated continuously.	No effect.	3
None	Overtemp Shutdown Light	Indicates an above normal operating temperature in bridge southwest motor and bridge drive has been disabled	Fails Open	Loss of overtemp shutdown indication. Bridge drive will be disabled.	No effect.	3
			Fails Shorted	When overtemp occurs, current overload will blow FU14. Bridge drives will be disabled.	No effect.	3
None	SouthEast Motor Warning Thermistor	Provides variable resistance proportional to motor temperature	Fails Open	Motor overtemp warning on continuously	No effect.	3
			Fails Shorted	Loss of motor overtemp warning. Motor overtemp shutdown will disable drive if overtemp occurs.	No effect.	3
BSEMTW	Motogard Overtemp Module	Supplies power to bridge southEast overtemp warning light when an above normal motor temperature is detected	Fails Low or No Output	Loss of overtemp warning. Motor overtemp shutdown will disable drive if overtemp occurs.	No effect.	3

Table 23. **Electrical FMEA - Bridge Primary Mode**

System/Subsystem: 325 Ton Bridge Cranes at the Vehicle Assembly Building High Bays 1/2/3/4 / Bridge
PMN: H72-1200-01, -02
Drawing No.: EB-2508
Reference Figure: None

Find No. Part No.	Part Name	Part Function	a. Failure Mode b. Cause c. FMN d. Detection Method e. Correcting Action f. Time to Effect g. Timeframe	Failure Effect On System Performance	Failure Effect On Vehicle Systems And/Or Personnel Safety	Crit Cat
			Fails High Output	Overtemp warning light will remain on continuously.	No effect.	3
None	Overtemp Warning Light	Indicates an above normal operating temperature in bridge southEast motor	Fails Open	Loss of overtemp warning. Motor overtemp shutdown will disable drive if overtemp occurs.	No effect.	3
			Fails Shorted	When overtemp occurs, current overload will blow FU14. Bridge drive will be disabled.	No effect.	3
None	SouthEast Motor Shutdown Thermistor	Provides variable resistance proportional to motor temperature	Fails Open	Overtemp shutdown module will energize PLC input. PLC will disable bridge drive.	No effect.	3
			Fails Shorted	Loss of automatic motor overtemp shutdown. Overtemp warning light will warn of overtemp condition in motor.	No effect.	3
BSEMTS PCC No. 135101	Motogard Overtemp Module	Energize PLC input when overtemp is detected in bridge motor	Fails Low or No Output	Loss of automatic motor overtemp shutdown. Overtemp warning light will warn of overtemp condition in motor.	No effect.	3
			Fails High Output	PLC input will be energized. PLC will disable bridge drive.	No effect.	3
I:2,4,B1	PLC Input %I137	Energized by BSEMTS when an overtemp condition occurs in bridge southEast motor	Fails De-Energized	Loss of automatic motor overtemp shutdown. Overtemp warning light will warn of overtemp condition in motor.	No effect.	3
			Fails Energized	PLC will disable bridge drive although an overtemp condition does not exist.	No effect.	3

Table 23. **Electrical FMEA - Bridge Primary Mode**

System/Subsystem: 325 Ton Bridge Cranes at the Vehicle Assembly Building High Bays 1/2/3/4 / Bridge
PMN: H72-1200-01, -02
Drawing No.: EB-2508
Reference Figure: None

Find No. Part No.	Part Name	Part Function	a. Failure Mode b. Cause c. FMN d. Detection Method e. Correcting Action f. Time to Effect g. Timeframe	Failure Effect On System Performance	Failure Effect On Vehicle Systems And/Or Personnel Safety	Crit Cat
GO:11,016	PLC Output %Q144	Sends power to bridge southEast motor overtemp indication light when overtemp occurs or indicator lights are tested	Fails De-Energized	Loss of motor overtemp shutdown indication. PLC will disable bridge drive.	No effect.	3
			Fails Energized	Bridge west motor overtemp indication light will remain illuminated continuously.	No effect.	3
None	Overtemp Shutdown Light	Indicates an above normal operating temperature in bridge southEast motor and bridge drive have been disabled	Fails Open	Loss of overtemp shutdown indication. Bridge drive will be disabled.	No effect.	3
			Fails Shorted	When overtemp occurs, current overload will blow FU14. Bridge drives will be disabled.	No effect.	3
BNSRA	Scaling Resistor Assembly	Scale voltage from Fault Resistors to conform to BNFSA circuitry	Fails Open	Voltage imbalance will be detected by BNFSA. BNFSA will disable BNMCM and de-energize relay BNRDY.	No effect.	3
			Fails Shorted	Voltage imbalance will be detected by BNFSA. BNFSA will disable BNMCM and de-energize relay BNRDY.	No effect.	3
BNFSA	Bridge North Fault Sense Assembly	Monitor Bridge North motor control module current balance, disabling BNMCM if imbalance occurs				

Table 23. **Electrical FMEA - Bridge Primary Mode**

System/Subsystem: 325 Ton Bridge Cranes at the Vehicle Assembly Building High Bays 1/2/3/4 / Bridge
PMN: H72-1200-01, -02
Drawing No.: EB-2508
Reference Figure: None

Find No. Part No.	Part Name	Part Function	a. Failure Mode b. Cause c. FMN d. Detection Method e. Correcting Action f. Time to Effect g. Timeframe	Failure Effect On System Performance	Failure Effect On Vehicle Systems And/Or Personnel Safety	Crit Cat
	J1-6	Provide ground for relay BNRDY	Fails High	Relay BNRDY will not energize. Bridge drive will be disabled. Brakes will set.	No effect.	3
			Fails Low	Relay BNRDY will remain energized. Relays BNFSA and BNDE will disable BNMCM. Brakes will set.	No effect.	3
	J2-12	Provide enable signal for BNMCM	Fails High	BNMCM will not be enabled. Bridge drive will not run.	No effect.	3
			Fails Low	Relay BNDE and PLC output will disable BNMCM. Brakes will set.	No effect.	3
	J2-5	Provide power for sensing contacts of relay BNDC	Fails Low or No Output	BNFSA will sense that BNDC contact did not close even though it did. BNFSA will not enable BNMCM or provide ground for relay BNRDY. Bridge will not operate.	No effect.	3
	J2-6	Input from sensing contacts of relay BNDC	Fails Low	BNFSA will sense that BNDC contact did not close even though it did. BNFSA will not enable BNMCM or provide ground for relay BNRDY. Bridge will not operate.	No effect.	3
			Fails High	Relay BNDE and PLC output will disable BNMCM. Brakes will set.	No effect.	3
BNRDY	Relay	Energizes when BNMCM is ready and BNFSA J1-6 goes low	Fails De-Energized	Relay BNDE, BNDC and PLC input will not be energized to complete DC motor armature loop. Bridge drive will not operate.	No effect.	3

Table 23. **Electrical FMEA - Bridge Primary Mode**

System/Subsystem: 325 Ton Bridge Cranes at the Vehicle Assembly Building High Bays 1/2/3/4 / Bridge
PMN: H72-1200-01, -02
Drawing No.: EB-2508
Reference Figure: None

Find No. Part No.	Part Name	Part Function	a. Failure Mode b. Cause c. FMN d. Detection Method e. Correcting Action f. Time to Effect g. Timeframe	Failure Effect On System Performance	Failure Effect On Vehicle Systems And/Or Personnel Safety	Crit Cat
			Fails Energized	BNMCM J1-20 goes high when fault occurs, de-energizing relay BNFLT. BNFLT will de-energize relay BNDE, BNDC and PLC input. Bridge drive will be disabled and brakes will set.	No effect.	3
BNRDY-46H20	Contact	Closes to energize relay BNDE	Fails Open	Relay BNDE, BNDC and PLC input will not be energized to complete DC motor armature loop. Bridge drive will not operate.	No effect.	3
			Fails Closed	BNMCM J1-20 goes high when fault occurs, de-energizing relay BNFLT. BNFLT will de-energize relay BNDE, BNDC and PLC input. Bridge drive will be disabled and brakes will set.	No effect.	3
BNFLT	Bridge North Fault Relay	Energizes when BNMCM J1-20 goes low, signaling BNMCM has a fault	Fails De-Energized	Relay BNFLT will indicate a fault exists in the BNMCM when a fault does not exist. Relays BNDE, BNDC and PLC input will be de-energized. Bridge drive will be disabled and brakes will set.	No effect.	3
			Fails Energized	BNMCM J2-15 will go low when fault occurs, de-energizing relay BNRDY. BNRDY will de-energize relay BNDE, BNDC and PLC input. Bridge drive will be disabled and brake will set.	No effect.	3

Table 23. **Electrical FMEA - Bridge Primary Mode**

System/Subsystem: 325 Ton Bridge Cranes at the Vehicle Assembly Building High Bays 1/2/3/4 / Bridge
PMN: H72-1200-01, -02
Drawing No.: EB-2508
Reference Figure: None

Find No. Part No.	Part Name	Part Function	a. Failure Mode b. Cause c. FMN d. Detection Method e. Correcting Action f. Time to Effect g. Timeframe	Failure Effect On System Performance	Failure Effect On Vehicle Systems And/Or Personnel Safety	Crit Cat
BNFLT-46K20	Contact	Closes to energize relay BNDE	Fails Open	Relay BNFLT will indicate a fault exists in the BNMCM when a fault does not exist. Relays BNDE, BNDC and PLC input will be de-energized. Bridge drive will be disabled and brakes will set.	No effect.	3
			Fails Closed	BNMCM J2-15 will go low when fault occurs, de-energizing relay BNRDY. BNRDY will de-energize relays BNDE, BNDC and PLC input. Bridge drive will be disabled and brake will set.	No effect.	3
O;1,5,D1	PLC Output %Q13	Energizes input J2-6, RUN, of BNMCM	Fails De-Energized	BNMCM circuitry will not be enabled. Bridge drive will not operate.	No effect.	3
			Fails Energized	Delta Tau motion controller will command BNMCM to maintain zero speed. Brakes will set.	No effect.	3
I:1,4,A3	PLC input %I67	De-energizes when BNSCR over temperature switch opens signal over temperature in the bridge North SCRs	Fails De-Energized	PLC will detect SCR overtemp even though an overtemp condition does not exist. PLC will disable drives and set brakes.	No effect.	3
			Fails Energized	BNMCM will not be signaled that SCRs are in an over temperature condition. Requires previous failure to cause over temperature condition. BNMCM or BNFSA will detect if SCR fails and shut down drive and set brakes.	No effect.	3

Table 23. **Electrical FMEA - Bridge Primary Mode**

System/Subsystem: 325 Ton Bridge Cranes at the Vehicle Assembly Building High Bays 1/2/3/4 / Bridge
PMN: H72-1200-01, -02
Drawing No.: EB-2508
Reference Figure: None

Find No. Part No.	Part Name	Part Function	a. Failure Mode b. Cause c. FMN d. Detection Method e. Correcting Action f. Time to Effect g. Timeframe	Failure Effect On System Performance	Failure Effect On Vehicle Systems And/Or Personnel Safety	Crit Cat
BNSCR OT	Bridge North SCR over temperature switch	Opens when an over temperature condition exists in the bridge north SCRs	Fails Closed	BNMCM will not be signaled that SCRs are in an over temperature condition. Requires previous failure to cause over temperature condition. BNMCM or BNFSA will detect if SCR fails and shut down drive and set brakes.	No effect.	3
			Fails Energized	BNMCM will receive external fault signal continuously. BNMCM will not run. Brakes will (remain) set.	No effect.	3
BNMCM (continued)	Bridge North Motor Control Module	Provides North armature and field control of both bridge motors				
	J1-8,9	DC current reference input from Delta Tau	Fails Low	BNMCM will provide too low of a current to achieve or maintain speed commanded. Delta Tau motion controller will detect following error. PLC will shut down bridge drive and set brakes.	No effect.	3
			Fails High	BNMCM will provide too high of a current to achieve or maintain speed commanded. Delta Tau motion controller will detect following error. PLC will shut down bridge drive and set brakes.	No effect.	3

Table 23. **Electrical FMEA - Bridge Primary Mode**

System/Subsystem: 325 Ton Bridge Cranes at the Vehicle Assembly Building High Bays 1/2/3/4 / Bridge
PMN: H72-1200-01, -02
Drawing No.: EB-2508
Reference Figure: None

Find No. Part No.	Part Name	Part Function	a. Failure Mode b. Cause c. FMN d. Detection Method e. Correcting Action f. Time to Effect g. Timeframe	Failure Effect On System Performance	Failure Effect On Vehicle Systems And/Or Personnel Safety	Crit Cat
	J1-14	+15 volts DC output for Bridge North Fault Sense Assembly	Fails Low	Voltage offset will cause imbalance in BNFSA comparators. BNFSA will indicate a fault has occurred and disable BNMCM. BNMCM will de-energize relays BNFLT and BNRDY causing PLC to disable drive and set brakes.	No effect.	3
			Fails High	Voltage offset will cause imbalance in BNFSA comparators. BNFSA will indicate a fault has occurred and disable BNMCM. BNMCM will de-energize relays BNFLT and BNRDY causing PLC to disable drive and set brakes.	No effect.	3
	J1-17	-15 volts DC output for Bridge North Fault Sense Assembly	Fails Low	Voltage offset will cause imbalance in BNFSA comparators. BNFSA will indicate a fault has occurred and disable BNMCM. BNMCM will de-energize relays BNFLT and BNRDY causing PLC to disable drive and set brakes.	No effect.	3
			Fails High	Voltage offset will cause imbalance in BNFSA comparators. BNFSA will indicate a fault has occurred and disable BNMCM. BNMCM will de-energize relays BNFLT and BNRDY causing PLC to disable drive and set brakes.	No effect.	3

Table 23. **Electrical FMEA - Bridge Primary Mode**

System/Subsystem: 325 Ton Bridge Cranes at the Vehicle Assembly Building High Bays 1/2/3/4 / Bridge
PMN: H72-1200-01, -02
Drawing No.: EB-2508
Reference Figure: None

Find No. Part No.	Part Name	Part Function	a. Failure Mode b. Cause c. FMN d. Detection Method e. Correcting Action f. Time to Effect g. Timeframe	Failure Effect On System Performance	Failure Effect On Vehicle Systems And/Or Personnel Safety	Crit Cat
	J1-20	Motor control fault output, goes high when fault occurs in BNMCM	Fails Low	BNMCM J2-15 will go low when fault occurs, de-energizing relay BNRDY. BNRDY will de-energize relays BNDE, BNDC and PLC input. Bridge drive will be disabled and brake will set.	No effect.	3
			Fails High	Relay BNFLT will indicate a fault exists in the BNMCM when a fault does not exist. Relays BNDE, BNDC and PLC input will be de-energized. Bridge drive will be disabled and brakes will set.	No effect.	3
	J2-4	Drive enable input from Fault Sense Assembly and relay BNDE	Fails Low	BNMCM will not be enabled. Bridge drive will not run.	No effect.	3
			Fails High	Relay BNDE will de-energize relay BNDC, opening DC motor armature loop. PLC input will cause brakes to set.	No effect.	3
	J2-6	Drive run input from PLC	Fails Low	BNMCM circuitry will not be enabled. Bridge drive will not operate.	No effect.	3
			Fails High	Delta Tau motion controller will command BNMCM to maintain zero current. Brakes will set.	No effect.	3
	J2-15	Ready relay output to relay BNRDY	Fails Low	BNMCM will not energize relay BNRDY or signal Delta Tau motion controller that BNMCM is ready. Bridge drive will be disabled. PLC will set brake.	No effect.	3

Table 23. **Electrical FMEA - Bridge Primary Mode**

System/Subsystem: 325 Ton Bridge Cranes at the Vehicle Assembly Building High Bays 1/2/3/4 / Bridge
PMN: H72-1200-01, -02
Drawing No.: EB-2508
Reference Figure: None

Find No. Part No.	Part Name	Part Function	a. Failure Mode b. Cause c. FMN d. Detection Method e. Correcting Action f. Time to Effect g. Timeframe	Failure Effect On System Performance	Failure Effect On Vehicle Systems And/Or Personnel Safety	Crit Cat
			Fails High	BNMCM J1-20 will de-energize relay BNFLT when fault occurs, de-energizing relays BNDE, BNDC and PLC input. Drive will be disabled and PLC will set brake.	No effect.	3
	J2-18	+25 volt DC output to Fault Sense Assembly and relay BNFLT	Fails Low	Loss of +25 VDC to BNFSA and relay. BNMCM input J2-6 will not be energized to enable BNMCM circuitry. Bridge drive will not operate. BNMCM will fault internally on loss of +25 VDC and de-energize relays BNRDY and BNFLT, causing PLC to disable drive and set brake.	No effect.	3
			Fails High	Possible damage to fault sense assembly or cause motor control module to malfunction. PLC will detect fault, disable drive, and set brakes.	No effect.	3
BSSRA Ref. 0003721	Scaling Resistor Assembly	Scale voltage from fault resistors to conform to BSFSA circuitry	Fails Open	Voltage imbalance will be detected by BSFSA. BSFSA will disable BSMCM and de-energize relay BSRDY.	No effect.	3
			Fails Shorted	Voltage imbalance will be detected by BSFSA. BSFSA will disable BSMCM and de-energize relay BSRDY.	No effect.	3

Table 23. **Electrical FMEA - Bridge Primary Mode**

System/Subsystem: 325 Ton Bridge Cranes at the Vehicle Assembly Building High Bays 1/2/3/4 / Bridge
PMN: H72-1200-01, -02
Drawing No.: EB-2508
Reference Figure: None

Find No. Part No.	Part Name	Part Function	a. Failure Mode b. Cause c. FMN d. Detection Method e. Correcting Action f. Time to Effect g. Timeframe	Failure Effect On System Performance	Failure Effect On Vehicle Systems And/Or Personnel Safety	Crit Cat
BSFSA Ref. 0001802	Bridge South Fault Sense Assembly	Monitor Bridge South motor control module current balance, disabling BSMCM if imbalance occurs				
	J1-6	Provide ground for relay BSRDY	Fails High	Relay BSRDY will not energize. Bridge drive will be disabled. Brakes will set.	No effect.	3
			Fails Low	Relay BSRDY will remain energized. Relays BSFSA and BSDE will disable BSMCM. Brakes will set.	No effect.	3
	J2-12	Provide enable signal for BSMCM	Fails High	BSMCM will not be enabled. Bridge will not run.	No effect.	3
			Fails Low	Relay BSDE and PLC output will disable BSMCM . Brakes will set.	No effect.	3
	J2-5	Provide power for sensing contacts of relay BSDC	Fails Low or No Output	BSFSA will sense that BSDC contact did not close even though it did. BSFSA will not enable BSMCM or provide ground for relay BSRDY. Bridge will not operate.	No effect.	3
			Fails High	No effect.	No effect.	3
	J2-6	Provide power for sensing contacts of relay BSDC	Fails Low or No Output	BSFSA will sense that BSDC contact did not close even though it did. BSFSA will not enable BSMCM or provide ground for relay BSRDY. Bridge will not operate.	No effect.	3
			Fails High	No effect.	No effect.	3

Table 23. **Electrical FMEA - Bridge Primary Mode**

System/Subsystem: 325 Ton Bridge Cranes at the Vehicle Assembly Building High Bays 1/2/3/4 / Bridge
PMN: H72-1200-01, -02
Drawing No.: EB-2508
Reference Figure: None

Find No. Part No.	Part Name	Part Function	a. Failure Mode b. Cause c. FMN d. Detection Method e. Correcting Action f. Time to Effect g. Timeframe	Failure Effect On System Performance	Failure Effect On Vehicle Systems And/Or Personnel Safety	Crit Cat
BSRDY	Relay	Energizes when BSMCM is ready and BSFSA J1-6 goes low	Fails De-Energized	Relay BSDE, BSDC and PLC input will not be energized to complete DC motor armature loop. Bridge drive will not operate.	No effect.	3
			Fails Energized	BSMCM J1-20 goes high when fault occurs, de-energizing relay BSFLT. BSFLT will de-energize relay BSFLT. BSFLT will de-energize relays BSDE, BSDC and PLC input. Bridge drive will be disabled and brakes will set.	No effect.	3
BSRDY-46H22	Contact	Closes to energize relay BSDE	Fails Open	Relays BSDE, BSDC and PLC input will not be energized to complete DC motor armature loop. Bridge drive will not operate.	No effect.	3
			Fails Closed	BSMCM J1-20 goes high when fault occurs, de-energizing relay BSFLT. BSFLT will de-energize relays BSDE, BSDC and PLC input. Bridge drive will be disabled and brakes will set.	No effect.	3
BSFLT	Bridge South Fault Relay	Energizes when BSMCM J1-20 goes low, signaling BSMCM has a fault	Fails De-Energized	Relay BSFLT will indicate a fault exists in the BSMCM when a fault does not exist. Relays BSDE, BSDC and PLC input will be de-energized. Bridge drive will be disabled and brakes will set.	No effect.	3

Table 23. **Electrical FMEA - Bridge Primary Mode**

System/Subsystem: 325 Ton Bridge Cranes at the Vehicle Assembly Building High Bays 1/2/3/4 / Bridge
PMN: H72-1200-01, -02
Drawing No.: EB-2508
Reference Figure: None

Find No. Part No.	Part Name	Part Function	a. Failure Mode b. Cause c. FMN d. Detection Method e. Correcting Action f. Time to Effect g. Timeframe	Failure Effect On System Performance	Failure Effect On Vehicle Systems And/Or Personnel Safety	Crit Cat
			Fails Energized	BSMCM J2-15 will go low when fault occurs, de-energizing relay BSRDY. BSRDY will de-energize relays BSDE, BSDC and PLC input. Bridge drive will be disabled and brake will set.	No effect.	3
BSFLT-46K22	Contact	Closes to energize relay BSDE	Fails Open	Relay BSFLT will indicate a fault exists in the BSMCM when a fault does not exist. Relays BSDE, BSDC and PLC input will be de-energized. Bridge drive will be disabled and brakes will set.	No effect.	3
			Fails Closed	BSMCM J2-15 will go low when fault occurs, de-energizing relay BSRDY. BSRDY will de-energize relays BSDE, BSDC and PLC input. Bridge drive will be disabled and brake will set.	No effect.	3
O:1,5,D3	PLC Output %Q15	Energizes input J2-6, RUN, of BSMCM	Fails De-Energized	BSMCM circuitry will not be enabled. Bridge drive will not operate	No effect.	3
			Fails Energized	Delta Tau motion controller will command BSMCM to maintain zero speed. Brakes will set.	No effect.	3
I:1,4,C3	PLC Input %I83	De-energizes when BSSCR over temperature switch opens. Signals over temperature in the bridge south SCRs	Fails De-Energized	PLC will detect SCR overtemp even though an overtemp condition does not exist. PLC will disable drives and set brakes.	No effect.	3

Table 23. **Electrical FMEA - Bridge Primary Mode**

System/Subsystem: 325 Ton Bridge Cranes at the Vehicle Assembly Building High Bays 1/2/3/4 / Bridge
PMN: H72-1200-01, -02
Drawing No.: EB-2508
Reference Figure: None

Find No. Part No.	Part Name	Part Function	a. Failure Mode b. Cause c. FMN d. Detection Method e. Correcting Action f. Time to Effect g. Timeframe	Failure Effect On System Performance	Failure Effect On Vehicle Systems And/Or Personnel Safety	Crit Cat
			Fails Energized	BSMCM will not be signaled that SCRs are in an over temperature condition. Requires previous failure to cause over temperature condition. BSMCM or BSFSA will detect if SCR fails and shut down drive and set brakes.	No effect.	3
BSSCR OT	Bridge South SCR over temperature switch	Opens when an over temperature condition exists in the Bridge South SCRs	Fails Closed	BSMCM will not be signaled that SCRs are in an over temperature condition. Requires previous failure to cause over temperature condition. BSMCM or BSFSA will detect if SCR fails and shut down drive and set brakes.	No effect.	3
			Fails Open	BNMCM will receive external fault signal continuously. BNMCM will not run. Brakes will (remain) set.	No effect.	3
BSMCM (continued)	Bridge South motor control module	Provides south armature and field control of both South bridge motors				
	J1-8,9	DC current reference input from Delta Tau	Fails Low	BSMCM will provide too low of a current to achieve or maintain speed commanded. Delta Tau motion controller will detect following error. PLC will shut down bridge drive and set brakes.	No effect.	3

Table 23. **Electrical FMEA - Bridge Primary Mode**

System/Subsystem: 325 Ton Bridge Cranes at the Vehicle Assembly Building High Bays 1/2/3/4 / Bridge
PMN: H72-1200-01, -02
Drawing No.: EB-2508
Reference Figure: None

Find No. Part No.	Part Name	Part Function	a. Failure Mode b. Cause c. FMN d. Detection Method e. Correcting Action f. Time to Effect g. Timeframe	Failure Effect On System Performance	Failure Effect On Vehicle Systems And/Or Personnel Safety	Crit Cat
			Fails High	BSMCM will provide too high of a current to achieve or maintain speed commanded. Delta Tau motion controller will detect following error. PLC will shut down bridge drive and set brakes.	No effect.	3
	J1-14	+15 volts DC output for Bridge South Fault Sense Assembly	Fails Low	Voltage offset will cause imbalance in BSFSA comparators. BSFSA will indicate a fault has occurred and disable BSMCM. BSMCM will de-energize relays BSFLT and BSRDY causing PLC to disable drive and set brakes.	No effect.	3
			Fails High	Voltage offset will cause imbalance in BSFSA comparators. BSFSA will indicate a fault has occurred and disable BSMCM. BSMCM will de-energize relays BSFLT and BSRDY causing PLC to disable drive and set brakes.	No effect.	3
	J1-17	-15 volts DC output for Bridge South Fault Sense Assemble	Fails Low	Voltage offset will cause imbalance in BSFSA comparators. BSFSA will indicate a fault has occurred and disable BSMCM. BSMCM will de-energize relays BSFLT and BSRDY causing PLC to disable drive and set brakes.	No effect.	3

Table 23. **Electrical FMEA - Bridge Primary Mode**

System/Subsystem: 325 Ton Bridge Cranes at the Vehicle Assembly Building High Bays 1/2/3/4 / Bridge
PMN: H72-1200-01, -02
Drawing No.: EB-2508
Reference Figure: None

Find No. Part No.	Part Name	Part Function	a. Failure Mode b. Cause c. FMN d. Detection Method e. Correcting Action f. Time to Effect g. Timeframe	Failure Effect On System Performance	Failure Effect On Vehicle Systems And/Or Personnel Safety	Crit Cat
			Fails High	Voltage offset will cause imbalance in BSFSA comparators. BSFSA will indicate a fault has occurred and disable BSMCM. BSMCM will de-energize relays BSFLT and BSRDY causing PLC to disable drive and set brakes.	No effect.	3
	J1-20	Motor control fault output, goes high when fault occurs in BSMCM	Fails Low	BSMCM J2-15 will go low when fault occurs, de-energizing relay BSRDY. BSRDY will de-energize relay BSDE, BSDC and PLC input. Bridge drive will be disabled and brake will set.	No effect.	3
			Fails High	Relay BSFLT will indicate a fault exists in the BSMCM when a fault does not exist. Relays BSDE, BSDC and PLC input will be de-energized. Bridge drive will be disabled and brakes will set.	No effect.	3
	J2-4	Drive enable input from Fault Sense Assembly and relay BSDE	Fails Low	BSMCM will not be enabled. Bridge drive will not run.	No effect.	3
			Fails High	Relay BSDE will de-energize relay BSDC, opening DC motor armature loop. PLC input will cause brakes to be set.	No effect.	3
	J2-6	Drive run input from PLC	Fails Low	BSMCM circuitry will not be enabled. Bridge drive will not operate.	No effect.	3

Table 23. **Electrical FMEA - Bridge Primary Mode**

System/Subsystem: 325 Ton Bridge Cranes at the Vehicle Assembly Building High Bays 1/2/3/4 / Bridge
PMN: H72-1200-01, -02
Drawing No.: EB-2508
Reference Figure: None

Find No. Part No.	Part Name	Part Function	a. Failure Mode b. Cause c. FMN d. Detection Method e. Correcting Action f. Time to Effect g. Timeframe	Failure Effect On System Performance	Failure Effect On Vehicle Systems And/Or Personnel Safety	Crit Cat
			Fails High	Delta Tau motion controller will command BSMCM to maintain zero current. Brakes will set.	No effect.	3
	J2-15	Ready relay output to relay BSRDY	Fails Low	BSMCM will not energize relay BSRDY or signal Delta Tau motion controller that BSMCM is ready. Bridge drive will be disabled. PLC will set brake.	No effect.	3
			Fails High	BSMCM J1-20 will de-energize relay BSFLT when fault occurs, de-energizing relays BSDE, BSDC and PLC input. Drive will be disabled and PLC will set brake.	No effect.	3
	J2-18	+25 volt DC output to Fault Sense Assembly and relay BSFLT	Fails Low	Loss of +25 VDC to BSFSA and relay. BSMCM input J2-6 will not be energized to enable BSMCM circuitry. Bridge drive will not operate. BSMCM will fault internally on loss of +25 VDC and de-energize relays BSRDY and BSFLT, causing PLC to disable drive and set brake.	No effect.	3
			Fails High	Possible damage to fault sense assembly or cause motor control module to malfunction. PLC will detect fault, disable drive, and set brakes.	No effect.	3
None	Power Supply	Provides voltage to LVDT and PLC inputs	Fails Low or No Output	Voltage input to all four LVDT will drop equally. Feedback resolution will be decreased. Bridge will skew on rails.	No effect.	3

Table 23. **Electrical FMEA - Bridge Primary Mode**

System/Subsystem: 325 Ton Bridge Cranes at the Vehicle Assembly Building High Bays 1/2/3/4 / Bridge
PMN: H72-1200-01, -02
Drawing No.: EB-2508
Reference Figure: None

Find No. Part No.	Part Name	Part Function	a. Failure Mode b. Cause c. FMN d. Detection Method e. Correcting Action f. Time to Effect g. Timeframe	Failure Effect On System Performance	Failure Effect On Vehicle Systems And/Or Personnel Safety	Crit Cat
			Fails High Output	Voltage input to all four LVDT will rise equally. Higher voltage will damage LVDT or PLC input. Bridge will skew on rails.	No effect.	3
None	Bridge Northwest Encoder	Send digital feedback to Delta Tau motion control board for servoing	Fails No Output	Delta Tau motion controller will detect loss of feedback and PLC will detect encoder imbalance. Bridge drive will be disabled. Brakes will (remain) set.	No effect.	3
			Fails single line no output	Delta Tau motion controller will feedback error and PLC will detect encoder imbalance. Bridge drive will be disabled. Brakes will (remain) set.	No effect.	3
None	Bridge Southwest Encoder	Send digital feedback to Delta Tau motion control board for servoing	Fails No Output	Delta Tau motion controller will detect loss of feedback and PLC will detect encoder imbalance. Bridge drive will be disabled. Brakes will (remain) set.	No effect.	3
			Fails single line no output	Delta Tau motion controller will feedback error and PLC will detect encoder imbalance. Bridge drive will be disabled. Brakes will (remain) set.	No effect.	3

Electrical FMEA, Bridge Backup Mode

Wire harnesses, cables, or connectors were not analyzed in the Electrical FMEA for this system since a single failure (open or short) could not result in the loss of life or vehicle. (Ref. NSTS 22206, Paragraph 4.4.1.b.2)

In Backup mode, it is assumed that a failure has occurred in the North drive, which was detected and caused the Bridge to be disabled. The controls were configured for the single mode of operation by switching the drive select switch to South drive only and switching the North drive circuit Breaker off. The Bridge is now configured for backup mode of operation whereby only the South drive will be utilized. The following “Back-Up” mode FMEA indicates only the areas where the system performance is altered. All other failure effects on system performance are identical to that of the “Normal” mode of operation.

This FMEA section references Ederer drawing EB-2508, specifically the following sheets:

Sheet	Title
43	Bridge North Motor Control Elementary
44	Bridge South Motor Control Elementary
45	Bridge Control Elementary
46	Bridge Control Elementary
47	Bridge Control Elementary
48	Bridge Control Elementary
49	Bridge West Motor Control Electronics Elementary
50	Bridge East Motor Control Electronics Elementary
51	Bridge Anti-skewing and Positioning System

Table 24. **Electrical FMEA - Bridge Backup Mode**

System/Subsystem: 325 Ton Bridge Cranes at the Vehicle Assembly Building High Bays 1/2/3/4 / Bridge
PMN: H72-1200-01, -02
Drawing No.: EB-2508
Reference Figure: None

Find No. Part No.	Part Name	Part Function	a. Failure Mode b. Cause c. FMN d. Detection Method e. Correcting Action f. Time to Effect g. Timeframe	Failure Effect On System Performance	Failure Effect On Vehicle Systems And/Or Personnel Safety	Crit Cat
None	Tachometer	Generates voltage proportional to rotational speed of West bridge motor	Fails Low or No Output	PLC will detect mismatch between encoder and tachometer feedback. PLC will disable drive and set brakes	No effect.	3
			Fails High Output	PLC will detect mismatch between encoder and tachometer feedback. PLC will disable drive and set brakes	No effect.	3
None	Tachometer	Generates voltage proportional to rotational speed of East bridge motor	Fails Low or No Output	PLC will detect mismatch between encoder and tachometer feedback. PLC will disable drive and set brakes	No effect.	3
			Fails High Output	PLC will detect mismatch between encoder and tachometer feedback. PLC will disable drive and set brakes	No effect.	3
BNDC	Relay	Energizes when bridge north drive is enabled	Fails De-energized	DC loop for north bridge motors will not be closed and BNFSA will not enable BNMCM. Bridge north drive will not operate. Applicable to BOTH and NORTH drive mode only. No effect in SOUTH drive mode.	No effect.	3
			Fails Energized	Bridge DC motor loop will remain closed. PLC will control BNMCM and brakes. Bridge will operate normally.	No effect.	3
BNDC	Contacts	Close to complete bridge north armature current loop	Fails Open	Bridge DC motor loop will not be closed. Bridge will not run.	No effect.	3

Table 24. **Electrical FMEA - Bridge Backup Mode**

System/Subsystem: 325 Ton Bridge Cranes at the Vehicle Assembly Building High Bays 1/2/3/4 / Bridge
PMN: H72-1200-01, -02
Drawing No.: EB-2508
Reference Figure: None

Find No. Part No.	Part Name	Part Function	a. Failure Mode b. Cause c. FMN d. Detection Method e. Correcting Action f. Time to Effect g. Timeframe	Failure Effect On System Performance	Failure Effect On Vehicle Systems And/Or Personnel Safety	Crit Cat
			Fails Closed	No effect. Will not compete a circuit.	No effect.	3
BSDC	Relay	Energizes when bridge south drive is enabled	Fails De-energized	DC loop for south bridge motors will not be closed and BSFSA will not enable BSMCM. Bridge south drive will not operate.	No effect.	3
			Fails Energized	Bridge DC motor loop will remain closed. PLC will control BSMCM and brakes. Bridge will operate normally.	No effect.	3
BSDC	Contacts	Close to complete bridge south armature current loop	Fails Open	Bridge DC motor loop will not be closed. Bridge will not run.	No effect.	3
			Fails Closed	No effect. Will not compete a circuit.	No effect.	3
BNFC1	Relay, North Drive Only Field Contactor	Energizes when North Drive Only is selected	Fails De-Energized	No effect during BOTH or South drive only operation.	No effect.	3
			Fails Energized	No effect during Both drive operation. BNMCM F1 and BSMCM F1 will be connected during South drive only operation. Will cause error in BSMCM disabling drive and setting brakes.	No effect.	3

5.1 LPS CONTROL / MONITOR REVIEW

There is no LPS control / monitor interface associated with this system.

6 HAZARD ANALYSIS

The Fault Tree and Hazard Analysis Worksheet follow.

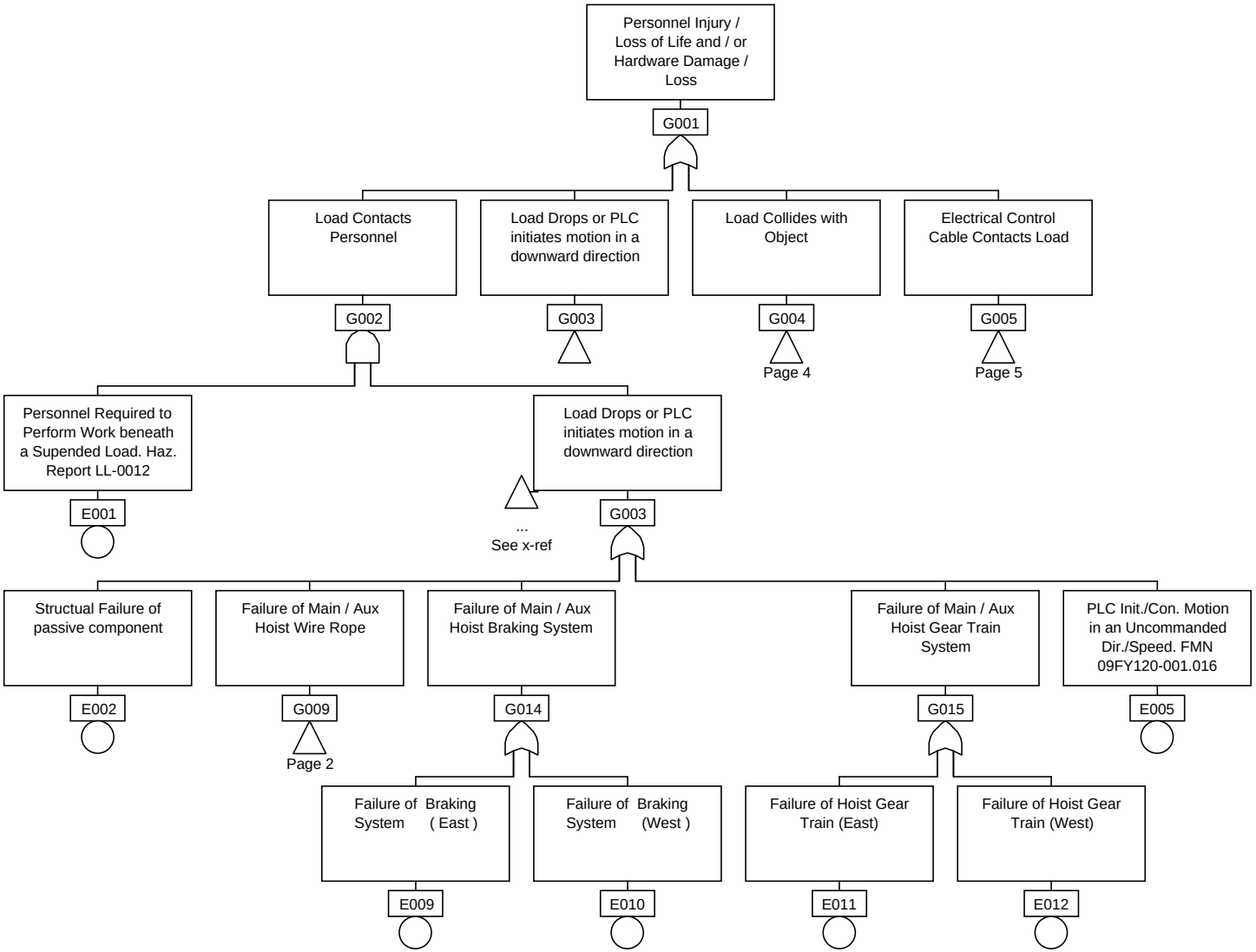

Figure 24. 325 Ton Bridge Cranes at the Vehicle Assembly Building High Bays 1/2/3/4 Fault Tree

(Sheet 1 of 5)

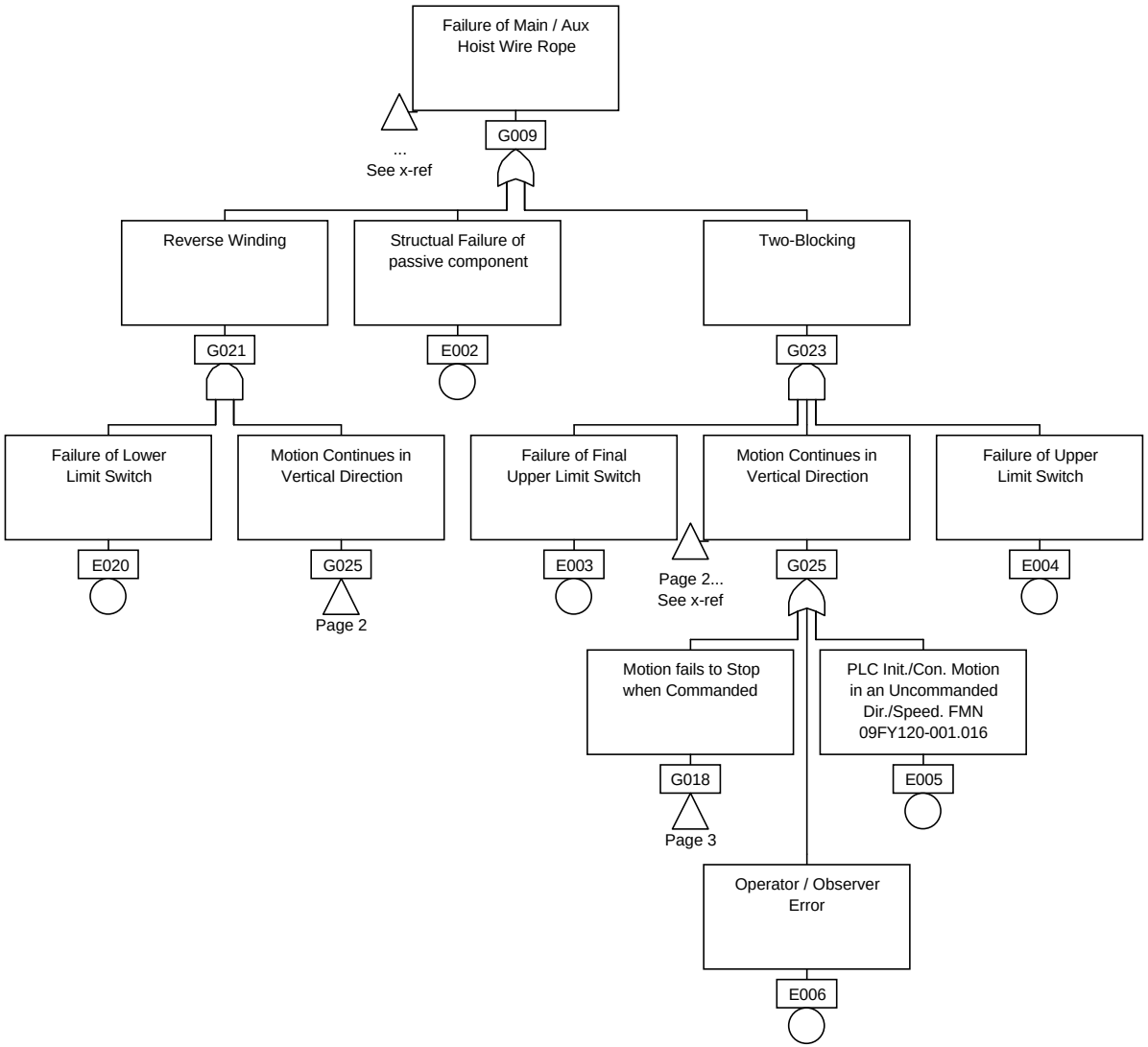

Figure 24. 325 Ton Bridge Cranes at the Vehicle Assembly Building High Bays 1/2/3/4 Fault Tree

(Sheet 2 of 5)

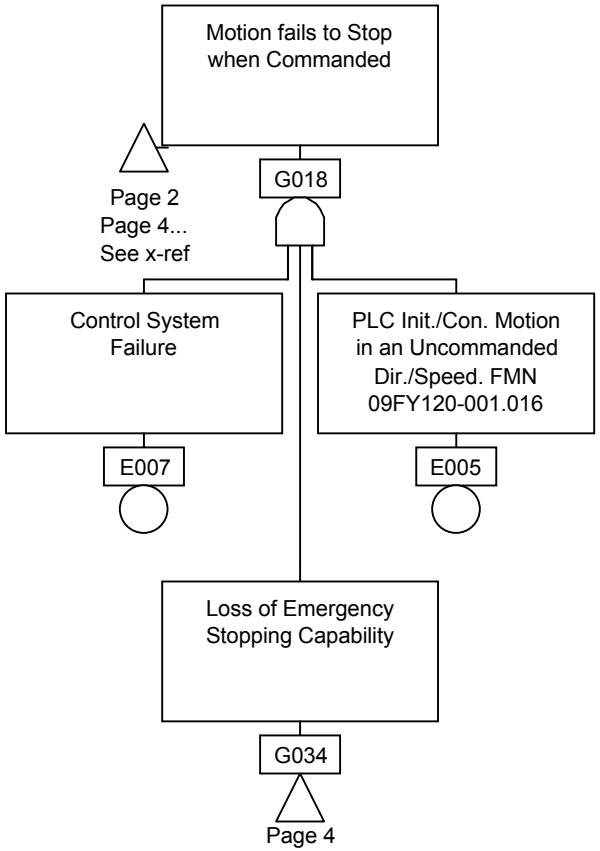

Figure 24. 325 Ton Bridge Cranes at the Vehicle Assembly Building High Bays 1/2/3/4 Fault Tree

(Sheet 3 of 5)

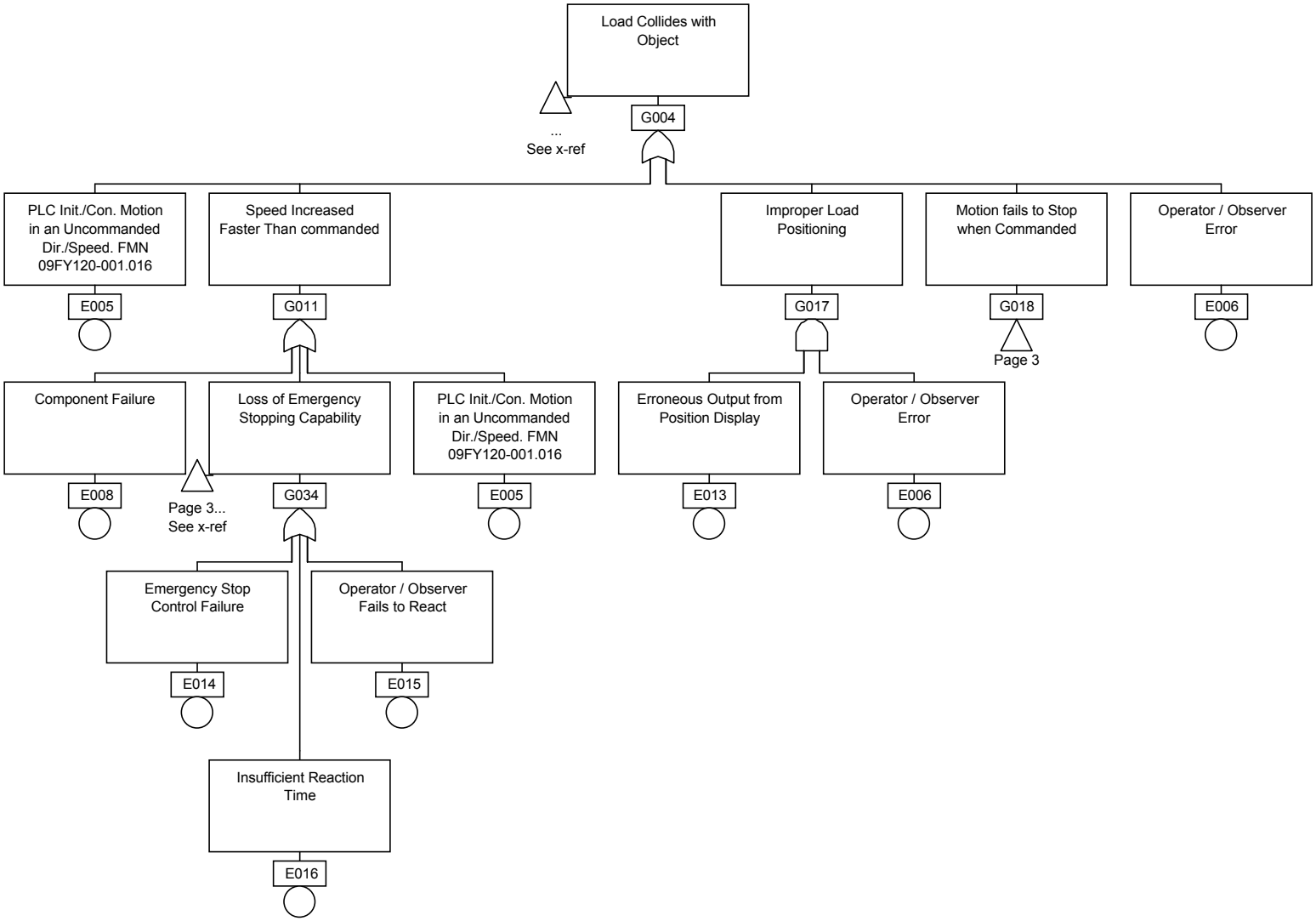

Figure 24. 325 Ton Bridge Cranes at the Vehicle Assembly Building High Bays 1/2/3/4 Fault Tree

(Sheet 4 of 5)

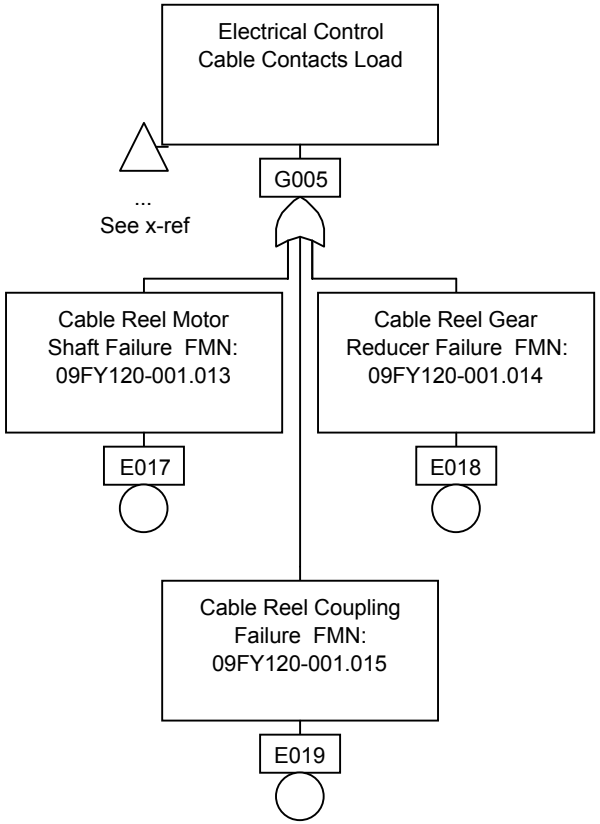

Figure 24. 325 Ton Bridge Cranes at the Vehicle Assembly Building High Bays 1/2/3/4 Fault Tree (Sheet 5 of 5)

Table 25. **Hazard Analysis Worksheet - 325 Ton Cranes**

System/Subsystem: 325 Ton Bridge Cranes at the Vehicle Assembly Building High Bays 1/2/3/4 **Location:** VAB
PMN: H72-1200-01, 02

Event No.	Event Nomenclature (Hazard Cause)	Hazard Elimination / Control Verification
E001	Personnel required to perform work beneath a suspended load	29 CFR 1416.179(n)(3)(vi), The employer shall require that the operator avoid carrying loads over people. GP1098F, 2-36, a load will not be lifted, suspended, or transported over personnel. NSS/GO 1740.9B, 206a(21), personnel shall not be located under suspended or moving loads unless the operation adheres to the OSHA approved NASA alternate standard for suspended load. Only operations approved by suspended load operation analysis / approval prepared per NASA alternate standard for suspended load operations allow personnel under a suspended load. Only approved number of personnel allowed under a suspended load for time required to accomplish task. Only trained and certified personnel will operate cranes. Critical skills verified per OMI Q3521. Periodic maintenance and inspection performed including monthly operational check per OMI Q6339. Operational check performed prior to each lift per OMI Q3521. Reference hazard report LL-0005
E002	Structural failure of passive components	NSS/GO 1740.9B, 202, Proofload, rated load and operational test required; 203, Periodic inspection required; 204, Periodic maintenance required; 204, periodic maintenance required. Periodic inspection and maintenance including monthly walkdown of entire crane inspecting for damage, corrosion or loose hardware, inspection of bridge and trolley structure inspection of hoist structures including drums, inspection of hooks; semi-annual inspection of bridge and trolley runways, and wheels, hoist drums, load blocks and sheaves; and annual inspection of hook, hook truion, and annual load test and hook magaflux per OMI Q6339. Preoperational check and inspection performed prior to each lift. Verification of annual load test per OMI Q3521.
E003	Failure of Final Upper Limit Switch	NSS/GO 1740.9B, 201g(9), Cranes used for critical lift required dual upper limit switches ; 202c, Operational test required ; 204b(3), Maintenance requirements for limit switches. Periodic maintenance and inspection of limit switches, including operational test per OMI Q6339. Pre-operational test performed prior to lift per OMI Q3521.

Table 25. **Hazard Analysis Worksheet - 325 Ton Cranes**

System/Subsystem: 325 Ton Bridge Cranes at the Vehicle Assembly Building High Bays 1/2/3/4 **Location:** VAB
PMN: H72-1200-01, 02

Event No.	Event Nomenclature (Hazard Cause)	Hazard Elimination / Control Verification
E004	Failure of upper limit switch	NSS/GO 1740.9B, 201g(9), Cranes used for critical lift required dual upper limit switches; 202c, Operational test required; 204b(3), Maintenance requirements for limit switches. Periodic maintenance and inspection of limit switches, including operational test per OMI Q6339. Pre-operational test performed prior to lift per OMI Q3521.
E005	PLC CPU initiates / continues motion in an uncommanded direction / speed. FMN: 09FY120-001.016	Pre-operational test performed prior to lift per OMI Q3521. See CIL sheet.
E006	Operator / Observer error	NSS/GO 1740.9B, 205a, Only trained and certified operators shall use \ operate cranes. Critical skills verified for crane operators and observers (CSR 019-1, 091-1, 094-1, 019-4, 091-4, and 094-4) prior to operations per OMI Q3521. Communications check prior to operations per OMI Q3521. Remote emergency stop stations provided.
E007	Control system failure	NSS/GO 1740.9B, 201g. (4), Control lever shall be used for speed control. Controls shall return to off position when operator relieves pressure; 201g(5), all cab operated cranes with step type control shall be equipped with lever controls. Controls shall be continuous effect type and provided with dead man feature that will not cause operator fatigue; 202, Operational test required; 203, periodic inspections required; 204b. (2), Periodic maintenance required. Periodic maintenance and inspection performed including monthly operational check per OMI Q6339. Pre-operational test performed prior to lift per OMI Q3521. All operations require observers with remote emergency stop positioned in view of load. Emergency procedures given per OMI Q3521, appendix Z.
E008	Component Failure	NSS/GO 1740.9B, 201g. (6), The electrical system shall be designed fail-safe; 202c, operational tests required; 204, periodic maintenance required. Multiple failures required. Speed increase will be recognized by crane systems and operations will be terminated. Periodic maintenance including monthly operational test performed per OMI Q6339. Preoperational test performed prior to lift per OMI Q3521.

Table 25. **Hazard Analysis Worksheet - 325 Ton Cranes**

System/Subsystem: 325 Ton Bridge Cranes at the Vehicle Assembly Building High Bays 1/2/3/4 **Location:** VAB
PMN: H72-1200-01, 02

Event No.	Event Nomenclature (Hazard Cause)	Hazard Elimination / Control Verification
E009 E010	Failure of braking system (East) Failure of braking system (West)	NSS/GO 1740.9B, 201f(2)(f), For critical lifts, two means of braking shall be provided, each capable of bringing a rated load to zero speed and holding it, 202, Proofload rated load and operational test required; 203e(d), Periodic inspection required; 204b(1) Periodic maintenance required. Each braking system capable of holding the rated load. Periodic maintenance and inspection performed including monthly operational test and annual load per OMI Q6339. Operational test prior to lift per OMI Q3521.
E011 E012	Failure of hoist gear train (East) Failure of hoist gear train (West)	NSS/GO 1740.9B, 201f(6), Gearing shall be designed per AGMA standards; 202, proofload rated load and operational test required; 203, Periodic inspections required; 204, Periodic maintenance required. Each system capable of holding rated load. Periodic maintenance and inspection performed including oil sampling and annual load per OMI Q6339. Pre-operational test performed prior to lift per OMI Q3521.
E013	Erroneous output from position display	NSS/GO 1740.9B, 201g.(6), The electrical system shall be designed fail safe; 202c, operational tests required; 204, periodic maintenance required. PLC will recognize failure of position display and will terminate operations. Periodic maintenance including monthly operational test performed per OMI Q6339. Preoperational test performed prior to lift per OMI Q3521.
E014	Emergency stop control failure	NSS/GO 1740.9B, 201g.(4), a red emergency stop push button shall be provided; 201g.(8), Remote emergency stops are required for critical lifts where operators view is restricted; 202c, Operational test required; 203, Periodic inspection required; 204, Periodic maintenance required. Periodic maintenance and inspection performed including monthly verification of emergency-stop control assembly certification and operational test per OMI Q6339. Operational test performed prior to lift per OMI Q3521. Remote emergency-stops are provided.

Table 25. **Hazard Analysis Worksheet - 325 Ton Cranes**

System/Subsystem: 325 Ton Bridge Cranes at the Vehicle Assembly Building High Bays 1/2/3/4 **Location:** VAB
PMN: H72-1200-01, 02

Event No.	Event Nomenclature (Hazard Cause)	Hazard Elimination / Control Verification
E015	Operator / Observer fails to react	NSS/GO 1740.9B, 205a, Only trained and certified operators shall use \ operate cranes. Critical skills verified for crane operators and observers (CSR 019-1, 091-1, 094-1, 019-4, 091-4, and 094-4) prior to operations per OMI Q3521. Emergency instructions given per OMI Q3521 appendix Z. Communications check prior to operations per OMI Q3521. Remote emergency-stops are provided.
E016	Insufficient reaction time	NSS/GO 1740.9B, 205a, Only trained and certified operators shall use \ operate cranes. Critical skills verified for crane operators and observers (CSR 019-1, 091-1, 094-1, 019-4, 091-4, and 094-4) prior to operations per OMI Q3521. Emergency instructions given per OMI Q3521 appendix Z. Communications check prior to operations per OMI Q3521. Remote emergency-stops are provided.
E017	Cable reel motor shaft failure. FMN: 09FY120-001.013	Periodic maintenance including monthly operational test performed per OMI Q6339. Preoperational test performed prior to lift per OMI Q3521. See CIL sheet.
E018	Cable reel gear reducer failure. FMN: 09FY120-001.014	Inspection of gear alignment, runout backlash, and mesh required. Periodic maintenance and inspection performed including oil sampling. Periodic maintenance including monthly operational test performed per OMI Q6339. Preoperational test performed prior to lift per OMI Q3521. See CIL sheet.
E019	Cable reel coupling failure. FMN: 09FY120-001.015	Periodic maintenance including monthly operational test performed per OMI Q6339. Preoperational test performed prior to lift per OMI Q3521. See CIL sheet.

Table 25. **Hazard Analysis Worksheet - 325 Ton Cranes**

System/Subsystem: 325 Ton Bridge Cranes at the Vehicle Assembly Building High Bays 1/2/3/4
PMN: H72-1200-01, 02
Location: VAB

Event No.	Event Nomenclature (Hazard Cause)	Hazard Elimination / Control Verification
E020	Failure of lower limit switch	NSS/GO 1740.9B, 201g(10), Cranes used for critical lifts shall be provided with lower limit switches to prevent reverse winding of the wire rope; 202, Operational test required; 204b(3), Maintenance requirements for limit switches. Periodic maintenance and inspection includes monthly operational test of limit switches, annual inspection of limit switches and operational test under no load prior to annual load test per OMI Q6339. Operational test of limit switches performed prior to lifts per OMI Q3521.
E021	Structural failure	Main and Auxiliary hoist are provided with dual wire ropes, each capable of holding the rated load. Periodic maintenance and inspection performed including monthly inspection of wire rope for kinks, crimps, wear broken wires or reduction in diameter, inspection of rope termination's and annual load test per OMI Q6339. Operational test performed prior to each lift per OMI Q3521.

6 SOFTWARE RELIABILITY ANALYSIS (SWRA)

6.1 GENERAL

A SWRA applies a functional approach to software evaluation. The software evaluation determines which equipment functions are controlled or monitored by software. Once these functions are identified, they will be analyzed to determine their potential effects on system performance if improperly performed. If system performance is affected, the resulting effects on vehicle systems and personnel safety are evaluated. The severity of failure effects will determine the criticality of the identified function. If a function has a critical effect, the correcting action / remarks column will include information regarding what testing has been done and what controls are in place to ensure that the function will perform as intended. If further action or testing is required, a recommendation section will be included to specify what action should be taken. The results of the SWRA are documented on the following SWRA worksheets.

6.1.1 DEFINITIONS

Critical Software	Software whose functional failure could cause loss / damage of flight hardware or cause loss of life.
Diagnostic	An evaluation performed to isolate areas of improper computer system operation and to prevent continued operation in a fault condition.
Function	The activity or operation that a part, component, or system must perform to accomplish its intended purpose.
Interrupt	A signal to a computer processor to stop execution of its current task and perform a different one.
Simulation	A representation duplicating some or all of an operation, that can be used to evaluate the operation of equipment. This can include computer simulation of mechanical system operation.
Software	A set of complete machine instructions (operations with operands specified) that executes within a single computer and relates to the accomplishment of some major function.
Software Fault	A defect in the programming or structure of a software program, or the resultant action of the software to a hardware failure that causes an unwanted results from program execution. These are causes of software failures.
Software Failure	The departure of the external results of program execution from requirements.
Software Failure Mode	The mode in which software can fail. Generically, there are three ways: loss of output, improper or wrong output, and output at improper time.
System Software	Imbedded, low level programming necessary for a computer to operate by defining how the processor executes data transfers, addressing, bus control, etc. This software is transparent to the user and cannot be altered.

Watchdog A hardware item that monitors the operation of a software operated system to assure that the software is operating properly.

6.1.2 SCOPE

The software Reliability Analysis will be limited to user-defined software, which includes command, feedback, and monitoring logic. The internal operating system of each processor is not considered part of the software logic and is not included in the analysis.

6.1.3 GROUNDRULES

1) The MHPOS subroutine will not be analyzed because it does not directly relate to a critical crane control function. This subroutine captures position data from the main hoist resolver and stores this information into program registers. This data is used for two purposes. It is displayed on the operator interface terminal as the main hoist hook position, in feet above the floor, which is not used for critical position information. The resolver data was to be used for the 'cruise to position' cruise control mode. This mode has been disabled and does not require further consideration unless it is reinstated.
2) The AHPOS subroutine will not be analyzed because it does not directly relate to a critical crane control function. This subroutine imports position data from the Delta Tau motion controller, scales the position into feet, and stores it into a program register to be sent to the operator interface terminal. This position in feet is not used for critical position information.

6.2 SOFTWARE DESCRIPTION

6.2.1 Program Execution

The program logic which controls the 325 Ton Bridge Cranes is run in the General Electric (GE) Logic Master 90 Programmable Logic Controller (PLC). The program is written in ladder logic form which resembles a relay schematic with relay coils and contacts. The ladder logic also allows the use of arithmetic and logical functions.

The PLC executes the program using a scan cycle. It acts upon each 'rung' in the ladder logic sequentially starting at the top and working to the bottom. If any subroutines are invoked from within the main program, the main program is temporarily halted while program execution shifts to the subroutine. The subroutine is executed sequentially from top to bottom. When the program execution reaches the bottom of the subroutine, it returns to the main routine. It then continues execution of the main program from the point at which it was halted by the subroutine call.

When the program execution reaches the end of the main program, it has completed a scan cycle. At the end of a scan cycle, the program execution returns to the top of the main program to start another scan cycle. The PLC will continuously execute this programming loop until interrupted by shutting off the crane power or by an interrupt introduced by the laptop computer through the serial communication port.

6.2.2 Watchdog Timer

PLC program execution is monitored by a watchdog timer. The watchdog timer is a hardware timer, which is programmed with a fixed time limit. The time limit is set slightly longer than the PLC program execution time. When the watchdog reaches the time limit, it causes all of the PLC outputs to go low. One of the PLC outputs is in the crane main power control circuit. When the output goes low, the mainline contactor will drop out, removing power from all drives and setting all brakes.

The watchdog has a reset input which resets the count back to zero. This reset is controlled by the PLC scan cycle controller. Once per scan cycle, the scan cycle controller resets the watchdog timer back to zero. If the program execution in the PLC is halted or delayed by a computer fault, the watchdog timer will time out and cause the crane to stop and set all brakes. If program execution is normal, the scan cycle controller will continue to reset the timer back to zero, allowing normal crane operation.

6.2.3 Program Function

The function of the PLC software is to control the PLC inputs and outputs. These inputs and outputs interface the operator controls with the hardware components of the crane. The PLC does this in several ways:

- **Direct Control** Brakes, Cable Reels
- **Indirect Control** Control Signals to Delta Tau Motion Controller
- **Direct Monitoring** Limit Switches, Temperature Sensors
- **Direct Input** Master switches, pushbuttons, switches

The PLC ladder logic performs many functions to control and monitor operation of the 325 Ton Bridge Cranes. Each of the functions performed is listed in the following SWRA worksheets.

6.3 SOFTWARE TESTING

Testing of the software is performed both in parallel to and following software development. The manufacturer developed and tested the software for proper performance during the manufacturing of the crane. Functional testing is also performed by NASA and LSOC personnel. This testing is performed in three phases.

6.3.1 Test Bed

The first test is performed to verify main hoist and auxiliary hoist control logic. Two hoist motors are directly coupled to a third which supplies a constant torque to simulate a load. A variety of loads are applied and performance parameters are verified. This test verifies proper control of the electronic hoist drives and motors by the PLC.

6.3.2 No Load Test (Pre-Delivery)

The second test is performed to verify proper performance of all crane motion and safety monitoring software. This test verifies bridge, trolley, main hoist, and auxiliary hoist performance. A formal test procedure is used to verify performance parameters in all modes of crane operation. Simulated failures are induced to verify performance of the software safety features.

6.3.3 Acceptance Test (On Site)

The acceptance test is a refined version of the no load test. It verifies proper performance once the crane is installed and placed under loaded conditions (no load, 25%, 50%, and 100%). A one-time proofload of 125% is applied. It accommodates any design and software changes made following the no load test. The software is placed under configuration control at the start of the acceptance test. Any modifications made will be carefully assessed to ensure other software functions will not be affected. Retesting of altered software functions will also be performed.

6.4 SOFTWARE LOGIC DESCRIPTION

The program structure has a main program and several subroutines. The structure is shown in Figure 35. Each subroutine is called from within the main program once per scan cycle.

The _MAIN program performs the high level functions such as control power, indicator lights, and watchdog timers that are not unique to a crane motion. All other program blocks are subroutines that control or monitor a specific crane motion.

The software criticality table provides a short description for each of the subroutines.

6.5 SOFTWARE CRITICALITY

The Software Functions which control or monitor system operation are assessed in the SWRA. There were 42 critical software functions identified in the critical functions assessed in the Criticality Assessment for this system.

The software subroutines and modules identified in the software logic description will be assessed to determine if they control or monitor any of the critical system functions assessed in the Criticality Assessment. If the subroutine or module relates to a critical system function, the software functions within the subroutine or module must be analyzed on the SWRA worksheets. If the subroutine or module does not relate to a critical system function, it does not require any further analysis since it cannot affect a critical system function.

Subroutine Module	Description	Related to Critical System Function ?	Related System Function
MHOIST	Controls main hoist motion	Yes	Main Hoist
VME_COM	Provides communication between the PLC and the Delta Tau motion controller.	Yes	Main Hoist, Auxiliary Hoist, Trolley, Bridge
AHOIST	Controls auxiliary hoist motion.	Yes	Auxiliary Hoist
BRIDGE	Controls bridge motion.	Yes	Bridge
TROLLEY	Controls trolley motion.	Yes	Trolley

DISPL	Provides communication between the PLC and the Prolog position display computers.	Yes	Output Signals (Position Information)
MHROT	Controls main hoist load rotation.	Yes	Main Hoist Hook Rotation
AHROT	Controls auxiliary hoist load rotation.	Yes	Auxiliary Hoist Hook Rotation
MHPOS	Reads position input from main hoist resolver	No. See software ground rules.	NA
AHPOS	Tracks current position from Delta Tau controller data.	No. See software ground rules.	NA
MFLTS	Monitors main hoist fault inputs and sets fault bits.	Yes	Main Hoist
AFLTS	Monitors auxiliary hoist fault inputs and set fault bits	Yes	Auxiliary Hoist
TFLTS	Monitors trolley fault inputs and sets fault bits	Yes	Trolley
BFLTS	Monitors bridge fault inputs and sets fault bits	Yes	Bridge

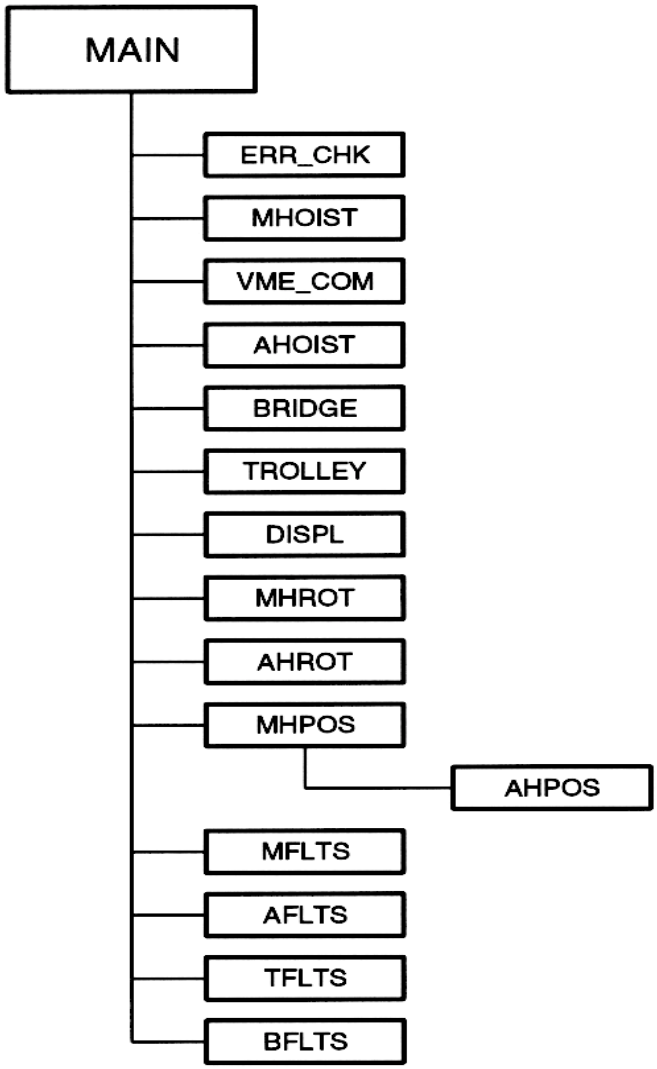

Figure 25. PLC Program Subroutine Structure

Table 26. **SWRA - 325 Ton Bridge Crane**

System/Subsystem: 325 Ton Bridge Cranes at the Vehicle Assembly Building High Bays 1/2/3/4
Processor : GE 90-70 **Routine:** F-2281, F-2281A **Subroutine:**
Revision Date: February 1993

Date: May 1999
PMN: H72-1200-01, 02 **Station Set/Facility Code:** 20
Prepared By: B. Kalle, USA 54530

Function	Function Description	a. Logic Failure b. FMN c. Detection Method d. Time to Effect	Failure Effect on System Performance	Failure Effect On System Performance, Vehicle Systems, And/Or Personnel Safety	Correcting Action Remarks	Crit Cat
M-1 5	Copies bit 12 of input 00033 into resister 02010.	a. Fails to copy bit	No effect. Register 02010 is not used in PLC logic.	No effect.	NA	NC
M-2 6-7	Checks the 10 VDC power supply for the master switches	a. Fails to detect low voltage	No effect. Power supply is monitored by voltage sensing relays.	No effect.	NA	NC
		a. Erroneously detects low voltage	PLC watchdog output will drop out causing control power to drop out. Crane will shut down and all brakes will set.	No effect.	NA	NC
M-3 8	Output de-energizes when PLC watchdog timer times out, de-energizes relay WD1 to drop out control power	a. Fails to de -energize	Other PLC outputs will de-energize when watchdog timer times out, disabling all drives and setting all brakes.	No effect.	NA	NC
		a. Fails to energize	Will not allow start relays M1, M2 to be energized. Crane control power will be disabled.	No effect.	NA	NC
M-4 9	Invokes ERRCHK subroutine when error test push button is pressed	a. Fails to call subroutine	Redundant contact and Master switch checks will be performed. Requires previous failures to cause unwanted motion or action.	No effect.	NA	NC
		a. Calls subroutine each PLC cycle	Will cause nuisance trips when contacts are cycled. Crane will be disabled and all brakes will set.	No effect.	NA	NC

Table 26. **SWRA - 325 Ton Bridge Crane**

System/Subsystem: 325 Ton Bridge Cranes at the Vehicle Assembly Building High Bays 1/2/3/4
Processor : GE 90-70 **Routine:** F-2281, F-2281A **Subroutine:**
Revision Date: February 1993

Date: May 1999
PMN: H72-1200-01, 02 **Station Set/Facility Code:** 20
Prepared By: B. Kalle, USA 54530

Function	Function Description	a. Logic Failure b. FMN c. Detection Method d. Time to Effect	Failure Effect on System Performance	Failure Effect On System Performance, Vehicle Systems, And/Or Personnel Safety	Correcting Action Remarks	Crit Cat
M-5 10-11	Resets fault bits in fault registers when fault reset keyswitch on control panel is switched	a. Fails to reset	Will not be able to reset Main hoist faults, main hoist will not operate.	No effect.	NA	NC
		a. Resets continuously	Fault bits will be cleared as soon as they are set. Crane operation will not be halted when a fault condition exist. Requires previous failure to cause fault.	No effect.	NA	NC
M-6 12-19	Invokes subroutine to control individual crane motions	a. Fails to call	Associated function will continue to perform last commanded speed and direction. Operator can stop crane operation by pressing E-Stop or switching the control power off.	Possible loss (damage) to a vehicle system due to load contacting an obstruction if there is inadequate clearance.	Correct calling of subroutines has been verified during no load test and acceptance testing by proper system operation and will be verified each time the system is powered up and positioned to lift load.	C
M-7 20	Invokes subroutines to track Main and Auxiliary hoist load block positions for cruise control feature	a. Fails to call	Position data for operator interface terminal will not be updated. This data is not used for data control. See software analysis ground rules.	No effect.	NA	NC

Table 26. **SWRA - 325 Ton Bridge Crane**

System/Subsystem: 325 Ton Bridge Cranes at the Vehicle Assembly Building High Bays 1/2/3/4
Processor : GE 90-70 **Routine:** F-2281, F-2281A **Subroutine:**
Revision Date: February 1993

Date: May 1999
PMN: H72-1200-01, 02 **Station Set/Facility Code:** 20
Prepared By: B. Kalle, USA 54530

Function	Function Description	a. Logic Failure b. FMN c. Detection Method d. Time to Effect	Failure Effect on System Performance	Failure Effect On System Performance, Vehicle Systems, And/Or Personnel Safety	Correcting Action Remarks	Crit Cat
M-8 21-24	Invokes subroutines to monitor crane functions and set bits in fault register if a fault occurs	a. Fails to call	Requires previous failures to cause faults.	No effect.	NA	NC
M-9 25-41	Provides power output signal to illuminate indicator lights on the crane panel	a. Fails to power light	Light on control panel will not illuminate to indicate fault. PLC will disable crane and set brakes.	No effect.	NA	NC
		a. Powers light continuously	Light on control panel will be on continuously even though a fault does not exist.	No effect.	NA	NC
M-10 42-44	Enables control logic when start push button on control panel is pressed	a. Fails to enable logic	Crane will not be enabled to run. Brakes will remain set.	No effect.	NA	NC
		a. Fails to disable logic	Main contactor will drop out when stop is selected with the power switch key. All drives will be disabled and all brakes will set.	No effect.	NA	NC
M-11 45-72	Monitors watchdog signal for each PLC loop running within the Delta Tau motion controller	a. Fails to detect Delta Tau error	Requires previous failure in Delta Tau motion controller. Associated crane motion will continue at last commanded speed and direction.	Possible loss (damage) to a vehicle system due to load contacting an obstruction if there is inadequate clearance.	Proper operation of Delta Tau watchdog counters and PLC direction verified during acceptance testing.	C

Table 26. **SWRA - 325 Ton Bridge Crane**

System/Subsystem: 325 Ton Bridge Cranes at the Vehicle Assembly Building High Bays 1/2/3/4
Processor : GE 90-70 **Routine:** F-2281, F-2281A **Subroutine:**
Revision Date: February 1993

Date: May 1999
PMN: H72-1200-01, 02 **Station Set/Facility Code:** 20
Prepared By: B. Kalle, USA 54530

Function	Function Description	a. Logic Failure b. FMN c. Detection Method d. Time to Effect	Failure Effect on System Performance	Failure Effect On System Performance, Vehicle Systems, And/Or Personnel Safety	Correcting Action Remarks	Crit Cat
		a. Erroneously detects Delta Tau error	PLC watchdog output will drop out causing crane control power to drop out. All drives will be disabled and all brakes will set.	No effect.	NA	NC
MH-1 3-9	Monitor error check registers for error bits that are set	a. Fails to detect error bit	Requires previous failure to cause error bit set. Hoist can continue to operate in failed condition if Delta Tau controller, drive, or PLC does not detect error by other means. Operator can halt operation of hoist and set brakes by switching off control power or pressing E-Stop.	Possible loss (damage) to a vehicle system if there is inadequate clearance between load and obstruction.	Proper operation of error detection has been verified during acceptance testing by inducing simulated faults and observing crane detect fault and safe operation.	C
		a. Erroneously detects error	Hoist operation will be halted and brakes will be set.	No effect.	NA	NC
MH-2 10-11	Verify drive select switch and circuit breakers match	a. Fails to detect mismatch	Requires previous failure of primary drive to cause switch change. PLC will detect drive not online and not allow hoist operation.	No effect.	NA	NC
		a. Erroneously detects mismatch	PLC will disable hoist operation.	No effect.	NA	NC
MH-3 12-14	Command Delta Tau controller to operate in field weaken speed	a. Fails to set field weaken speed	Hoist will not operate in field weaken speed range.	No effect.	NA	NC
		a. Erroneously sets field weaken speed	Hoist will attempt to operate at field weakened speeds. Drive will trip out do to armature overvoltage since field strength has not been reduced.	No effect.	NA	NC

Table 26. **SWRA - 325 Ton Bridge Crane**

System/Subsystem: 325 Ton Bridge Cranes at the Vehicle Assembly Building High Bays 1/2/3/4
Processor : GE 90-70 **Routine:** F-2281, F-2281A **Subroutine:**
Revision Date: February 1993

Date: May 1999
PMN: H72-1200-01, 02 **Station Set/Facility Code:** 20
Prepared By: B. Kalle, USA 54530

Function	Function Description	a. Logic Failure b. FMN c. Detection Method d. Time to Effect	Failure Effect on System Performance	Failure Effect On System Performance, Vehicle Systems, And/Or Personnel Safety	Correcting Action Remarks	Crit Cat
MH-4 15-18	Detect overload condition from weighting system inputs	a. Fails to detect overload	Requires operator error to place crane into overloaded condition.	No effect.	Proper operation of overload detection and fault shutdown are verified during acceptance testing.	NC
		a. Erroneously detects overload	PLC will halt hoist operation and set brakes.	No effect.	NA	NC
MH-5 19-25	Disable field weaken speed if a load is on the load block or an imbalance exist between the two weighting systems	a. Fails to detect load	Requires operator error to command field weaken speed with a load on the load block. If motors do not develop sufficient torque to support load, Delta Tau controller will detect following error, disable hoist, and set brakes.	No effect.	NA	NC
		a. Fails to detect imbalance	No effect. Load on either weighing system will disable field weaken speed.	No effect.	NA	NC
		a. Erroneously detects load or imbalance	PLC will disable field weaken speed.	No effect.	NA	NC
MH-6 26-28	Command field current strength	a. Fails to weaken field	Hoist will attempt to run at field weaken speed as commanded. Drive will trip out due to armature overvoltage since field strength has not been reduced.	No effect.	NA	NC
		a. Erroneously weakens field	Hoist will attempt to operate as commanded. If motors do not develop sufficient torque to support load, Delta Tau controller will detect following error, disable hoist, and set brakes.	No effect.	NA	NC

Table 26. **SWRA - 325 Ton Bridge Crane**

System/Subsystem: 325 Ton Bridge Cranes at the Vehicle Assembly Building High Bays 1/2/3/4
Processor : GE 90-70 **Routine:** F-2281, F-2281A **Subroutine:**
Revision Date: February 1993

Date: May 1999
PMN: H72-1200-01, 02 **Station Set/Facility Code:** 20
Prepared By: B. Kalle, USA 54530

Function	Function Description	a. Logic Failure b. FMN c. Detection Method d. Time to Effect	Failure Effect on System Performance	Failure Effect On System Performance, Vehicle Systems, And/Or Personnel Safety	Correcting Action Remarks	Crit Cat
MH-7 29-40	Compare East and west armature currents for imbalance	a. Fails to detect imbalance	Requires previous failure to cause imbalance. Delta Tau controller will continue to servo drives to follow commanded motion unless it detects a following error, which will cause the PLC to halt hoist operation and set brakes.	No effect.	NA	NC
		a. Erroneously detects imbalance	PLC will halt hoist operation and set brakes.	No effect.	NA	NC
MH-8 41-46	Output drive enable command to drives	a. Fails to enable drive	PLC will detect drive not online and not allow hoist to operate.	No effect.	NA	NC
		a. Fails to disable drive	Requires previous failure to cause motor overtemp shutdown. PLC will detect other shutdown faults, halt hoist operation and set brakes.	No effect.	NA	NC
MH-9 47-54	Command hoist to begin running and brakes to release	a. Fails to command run	Hoist will not operate. Torque will not be proved. Brakes will not release.	No effect.	NA	NC
		a. Erroneously commands run	No effect. Hoist will not operate until direction and speed are commanded with masterswitch.	No effect.	NA	NC
MH-10 55-60	Release brakes	a. Fails to release brakes	Hoist will attempt to drive through brakes, requiring higher than normal current to achieve motion. Will cause excessive brake wear and possible brake damage.	No effect.	NA	NC

Table 26. **SWRA - 325 Ton Bridge Crane**

System/Subsystem: 325 Ton Bridge Cranes at the Vehicle Assembly Building High Bays 1/2/3/4
Processor : GE 90-70 **Routine:** F-2281, F-2281A **Subroutine:**
Revision Date: February 1993

Date: May 1999
PMN: H72-1200-01, 02 **Station Set/Facility Code:** 20
Prepared By: B. Kalle, USA 54530

Function	Function Description	a. Logic Failure b. FMN c. Detection Method d. Time to Effect	Failure Effect on System Performance	Failure Effect On System Performance, Vehicle Systems, And/Or Personnel Safety	Correcting Action Remarks	Crit Cat
		a. Fails to set brakes	Regenerative braking of drive will bring hoist to a stop when stop is commanded. When zero velocity is achieved, the drives will drop off line, halting current to the motors. Loss of torque will allow the load to drop. Acceleration rate will be limited by the gear train inertia. Acceleration will continue until velocity exceeds speed range selected and the overspeed is detected by the PLC. PLC will trip the shunt trip main circuit breaker, removing all crane power and setting brakes. Operator can set brakes by switching control power off or by pressing E-Stop.	Possible loss of life due to SRB ignition if load contacts an obstruction at high velocity.	Proper operation of brake control has been verified during numerous cycles of hoist operation during acceptance testing and is verified each time the hoist is positioned to lift a load.	C
MH-11 61-68	Control timing of Brake release and drive run commands	a. Commands run and Brake release out of sequence	Hoist will attempt to drive through Brake until Brake releases. Sudden change in resistance will cause Delta Tau to detect a following error, disabling hoist and setting brakes.	No effect.	NA	NC
MH-12 69-75	Command bias torque based upon weighting system input	a. Commands low torque	Load will sag slightly when the brakes are released until Delta Tau controller increases armature current to achieve zero speed.	Possible loss (damage) of a vehicle system due to load contacting an obstruction if there is inadequate clearance.	Minimal movement is verified to be within .005 inches from brakes set to brakes released during acceptance testing.	C
		a. Commands high torque	Load will rise slightly when the brakes are released until Delta Tau controller decreases armature current to achieve zero speed.	Possible loss (damage) of a vehicle system due to load contacting an obstruction if there is inadequate clearance.	Minimal movement is verified to be within .005 inches from brakes set to brakes released during acceptance testing.	C
MH-13 76-77	Control Brake forcing circuit	a. Fails to reduce Brake current	Possible damage to brakes due to overheating. Brake failure will cause Brake to set.	No effect.	NA	NC

Table 26. **SWRA - 325 Ton Bridge Crane**

System/Subsystem: 325 Ton Bridge Cranes at the Vehicle Assembly Building High Bays 1/2/3/4
Processor : GE 90-70 **Routine:** F-2281, F-2281A **Subroutine:**
Revision Date: February 1993

Date: May 1999
PMN: H72-1200-01, 02 **Station Set/Facility Code:** 20
Prepared By: B. Kalle, USA 54530

Function	Function Description	a. Logic Failure b. FMN c. Detection Method d. Time to Effect	Failure Effect on System Performance	Failure Effect On System Performance, Vehicle Systems, And/Or Personnel Safety	Correcting Action Remarks	Crit Cat
		a. Fails to reset full Brake release current	Brakes will not fully release and cause brake shoes to drag leading to excessive brake wear.	No effect.	Proper operation of brake release (Free of binding and vibration) has been verified during acceptance testing.	NC
MH-14 78-101	Perform and verify torque proving	a. Fails to set proving bit	Hoist will not operate if proving bit is not set.	No effect.	NA	NC
		a. Erroneously sets proving bit	PLC will detect load imbalance as soon as current is commanded to the drives and prevent hoist from operating. Requires previous failure to cause torque proving failure.	No effect.	NA	NC
MH-15 102-104	Sends run command to hoist drive	a. Fails to send run command	Associated drive will not operate and fail torque proving. PLC will not allow hoist to operate.	No effect.	NA	NC
		a. Erroneously send run command	No effect. Hoist will not operate until direction and speed commands are input from masterswitch.	No effect.	NA	NC
MH-16 105-162	Start and stop cruise control functions	a. Fails to start cruise	Hoist will slow to zero velocity and brakes will set when masterswitch is released.	No effect.	NA	NC
		a. Fails to stop cruise (Manual)	Hoist will continue cruise speed and direction when cruise stop is pressed. Operator can halt motion by switching off control power or by pressing E-stop.	Possible loss (damage) of a vehicle system due to load contacting an obstruction if there is inadequate clearance.	Proper operation of cruise control stop has been verified during acceptance testing.	C

Table 26. **SWRA - 325 Ton Bridge Crane**

System/Subsystem: 325 Ton Bridge Cranes at the Vehicle Assembly Building High Bays 1/2/3/4
Processor : GE 90-70 **Routine:** F-2281, F-2281A **Subroutine:**
Revision Date: February 1993

Date: May 1999
PMN: H72-1200-01, 02 **Station Set/Facility Code:** 20
Prepared By: B. Kalle, USA 54530

Function	Function Description	a. Logic Failure b. FMN c. Detection Method d. Time to Effect	Failure Effect on System Performance	Failure Effect On System Performance, Vehicle Systems, And/Or Personnel Safety	Correcting Action Remarks	Crit Cat
		a. Fails to stop cruise (PLC)	Hoist will continue cruise speed and direction when cruise termination parameter is met. Operator can halt motion by switching off control power or by pressing E-stop.	Possible loss (damage) of a vehicle system due to load contacting an obstruction if there is inadequate clearance.	Proper operation of cruise control stop has been verified during acceptance testing.	C
MH-17 163-167	Clip speed command to set consistent first on and full speeds	a. Fails to clip	First on or full speed will vary slightly each time the hoist is moved.	No effect.	NA	NC
MH-18 168-179	Scale masterswitch input according to speed range selected	a. Fails to scale command	Speed commanded will not be scaled down when switching from coarse to fine speed. Hoist will operate in coarse speed when fine is selected. Operator can stop hoist by centering masterswitch, switching off control power, or pressing E-Stop.	Possible loss (damage) of a vehicle system due to load contacting an obstruction if there is inadequate clearance when hoist accelerates faster than expected.	Proper operation of this function has been verified during acceptance testing by switching speed ranges and measuring load block speeds.	NC
		a. Scales speed command continuously	Hoist will operate in fine speed only.	No effect.	NA	NC
MH-19 180-184	Clip speed command to set consistent first on and full speeds	a. Fails to clip	First on or full speed will vary slightly each time the hoist is moved.	No effect.	NA	NC

Table 26. **SWRA - 325 Ton Bridge Crane**

System/Subsystem: 325 Ton Bridge Cranes at the Vehicle Assembly Building High Bays 1/2/3/4
Processor : GE 90-70 **Routine:** F-2281, F-2281A **Subroutine:**
Revision Date: February 1993

Date: May 1999
PMN: H72-1200-01, 02 **Station Set/Facility Code:** 20
Prepared By: B. Kalle, USA 54530

Function	Function Description	a. Logic Failure b. FMN c. Detection Method d. Time to Effect	Failure Effect on System Performance	Failure Effect On System Performance, Vehicle Systems, And/Or Personnel Safety	Correcting Action Remarks	Crit Cat
MH-20 185	Scale masterswitch input for float speed range	a. Fails to scale command	Speed command will not be scaled down when switching to float mode. Hoist will operate in speed range selected on control panel when float is selected. Operator can stop hoist by releasing thumbswitch or footswitch, switching off control power, or pressing E-Stop.	Possible loss (damage) of a vehicle system due to load contacting an obstruction if there is inadequate clearance when hoist accelerates faster than expected.	Proper operation of this function has been verified during acceptance testing by switching speed ranges and measuring hoist speeds.	C
		a. Scales speed command continuously	Hoist will operate in float speed only.	No effect.	NA	NC
MH-21 186-187	Sends zero speed command to Delta Tau controller	a. Fails to send zero command	Hoist will slow to slowest possible speed and continue motion in direction last commanded. Operator can stop hoist by switching off control power or pressing E-Stop.	Possible loss (damage) of a vehicle system due to load contacting an obstruction if there is inadequate clearance.	Proper operation of this function has been verified during acceptance testing by many cycles of hoist motion and observing hoist coming to a complete stop with brakes set.	C
		a. Sends zero command continuously	Hoist brakes will release when motion is commanded but velocity command will be zero. Load will float with brakes released. Brakes will set when masterswitch is released or when float thumbswitch or footswitch is released.	No effect.	NA	NC
MH-22 188-192	Sends direction command to Delta Tau controller	a. Sends wrong direction command	MFLTS subroutine will compare actual motion to masterswitch Input and detect wrong direction. PLC will halt hoist and set brakes.	No effect.	NA	NC

Table 26. **SWRA - 325 Ton Bridge Crane**

System/Subsystem: 325 Ton Bridge Cranes at the Vehicle Assembly Building High Bays 1/2/3/4
Processor : GE 90-70 **Routine:** F-2281, F-2281A **Subroutine:**
Revision Date: February 1993

Date: May 1999
PMN: H72-1200-01, 02 **Station Set/Facility Code:** 20
Prepared By: B. Kalle, USA 54530

Function	Function Description	a. Logic Failure b. FMN c. Detection Method d. Time to Effect	Failure Effect on System Performance	Failure Effect On System Performance, Vehicle Systems, And/Or Personnel Safety	Correcting Action Remarks	Crit Cat
MH-23 193-196	Sends start and stop bit to Delta Tau controller.	a. Fails to send Start Bit	Delta Tau controller will not control hoist motion when commanded. PLC will send initial bias current to motor based on weighing system input and release brakes. Load will not move or will move up or down at a slow speed. Hoist will not move at any other speed regardless of speed command. Operator can halt hoist motion and set brakes by centering masterswitch, switching off control power, or by pressing e-stop.	Possible loss (damage) of a vehicle system due to contact of load to an obstruction if there is inadequate clearance.	Proper operation of Delta Tau motion controller has been verified by numerous cycles of hoist operation during acceptance testing and will be verified when hoist is positioned to lift a load.	C
		a. Fails to send Stop Bit	Delta Tau controller will bring hoist to a stop when commanded because zero speed will be commanded.	No effect.	NA	NC
VME-1 3-7	Provide two-way communication between the GE PLC and the Delta Tau motion control board.	a. Fails to transmit and receive data	PLC and/or Delta Tau controller will detect error and disable drives and set brakes or Delta Tau will continue to operate active drives with last available speed and direction commands. Operator can stop crane operation by pressing e-stop or switching the control power off.	Possible loss (damage) to a vehicle system if there is Inadequate clearance between load and obstruction.	Correct VME communication has been verified at each stage of crane testing by verifying proper system operation. Proper operation is verified each time the system is powered up and positioned to lift a load.	C
AH-1 3-9	Monitor error check registers for error bits that are set.	a. Fails to detect error bit	Requires previous failure to cause error bit to be set. Hoist can continue to operate in failed condition if Delta Tau controller, drive, or PLC does not detect error by other means. Operator can halt operation of hoist and set brakes by switching off the control power or pressing e-stop.	Possible loss (damage) of a vehicle system if there is inadequate clearance between load and an obstruction.	Proper operation of error detection has been verified during acceptance testing by inducing simulated faults and observing crane detect fault and safe operation.	C
		a. Erroneously detects error	Hoist operation will be halted and brakes will be set.	No effect.	NA	NC
AH-2 10-11	Verify drive select switch and circuit Breakers match.	a. Fails to detect mismatch	Requires previous failure of primary drive to cause switch change. PLC will detect drive not online and not allow hoist Operation.	No effect.	NA	NC

Table 26. **SWRA - 325 Ton Bridge Crane**

System/Subsystem: 325 Ton Bridge Cranes at the Vehicle Assembly Building High Bays 1/2/3/4
Processor : GE 90-70 **Routine:** F-2281, F-2281A **Subroutine:**
Revision Date: February 1993

Date: May 1999
PMN: H72-1200-01, 02 **Station Set/Facility Code:** 20
Prepared By: B. Kalle, USA 54530

Function	Function Description	a. Logic Failure b. FMN c. Detection Method d. Time to Effect	Failure Effect on System Performance	Failure Effect On System Performance, Vehicle Systems, And/Or Personnel Safety	Correcting Action Remarks	Crit Cat
		a. Erroneously detects mismatch	PLC will disable hoist operation.	No effect.	NA	NC
AH-3 12-14	Command Delta Tau controller to operate in field weaken speed	a. Fails to set field weaken speed	Hoist will not operate in field weaken speed range.	No effect.	NA	NC
		a. Erroneously sets field weaken speed	Hoist will attempt to operate at field weaken speeds. Drive will trip out due to armature overvoltage since field strength has not been reduced.	No effect.	NA	NC
AH-4 15-18	Detect overload condition from weighing system inputs	a. Fails to detect overload	Requires operator error to place crane into an overload condition.	No effect.	NA	NC
		a. Erroneously detects overload	PLC will halt hoist operation and set brakes	No effect.	NA	NC
AH-5 9-25	Disable field weaken speed if a load is on the load block or an Imbalance exists between the two weighing systems.	a. Fails to detect load	Requires operator error to command field weaken speed with a load on the load block. If motors do not develop sufficient torque to support load, Delta Tau controller will detect following error, disable hoist and set brakes.	No effect.	NA	NC
		a. Fails to detect imbalance	No effect. Load on either weighing system will disable field weaken speed.	No effect.	NA	NC

Table 26. **SWRA - 325 Ton Bridge Crane**

System/Subsystem: 325 Ton Bridge Cranes at the Vehicle Assembly Building High Bays 1/2/3/4
Processor : GE 90-70 **Routine:** F-2281, F-2281A **Subroutine:**
Revision Date: February 1993

Date: May 1999
PMN: H72-1200-01, 02 **Station Set/Facility Code:** 20
Prepared By: B. Kalle, USA 54530

Function	Function Description	a. Logic Failure b. FMN c. Detection Method d. Time to Effect	Failure Effect on System Performance	Failure Effect On System Performance, Vehicle Systems, And/Or Personnel Safety	Correcting Action Remarks	Crit Cat
		a. Erroneously detects load or imbalance	PLC will disable field weaken speed.	No effect.	NA	NC
AH-6 26-28	Command field current strength	a. Fails to weaken field	Hoist will attempt to run at field weaken speed as commanded. Drive will trip out due to armature overvoltage since field strength has not been reduced.	No effect.	NA	NC
		a. Erroneously weakens field	Hoist will attempt to operate as commanded. If motors do not develop sufficient torque to support load, Delta Tau controller will detect following error, disable hoist and set brakes.	No effect.	NA	NC
AH-7 29-38	Compare East and West armature currents for imbalance	a. Fails to detect imbalance	Requires previous failure to cause imbalance. Delta Tau Controller will continue to servo drives to follow commanded motion unless it detects a following error which will cause the PLC to halt hoist operation and set brakes.	No effect.	NA	NC
		a. Erroneously detects imbalance	PLC will halt hoist operation and set brakes.	No effect.	NA	NC
AH-8 39-44	Output drive enable command to drives	a. Fails to enable drive	PLC will detect drive not online and not allow hoist to operate.	No effect.	NA	NC
		a. Fails to disable drive	Requires previous failure to cause motor overtemp shutdown. PLC will detect other shutdown faults, halt hoist operation and set brakes.	No effect.	NA	NC
AH-9 45-52	Command hoist to begin running and brakes to release	a. Fails to command run	Hoist will not operate, torque will not be proved, brakes will not release.	No effect.	NA	NC

Table 26. **SWRA - 325 Ton Bridge Crane**

System/Subsystem: 325 Ton Bridge Cranes at the Vehicle Assembly Building High Bays 1/2/3/4
Processor : GE 90-70 **Routine:** F-2281, F-2281A **Subroutine:**
Revision Date: February 1993

Date: May 1999
PMN: H72-1200-01, 02 **Station Set/Facility Code:** 20
Prepared By: B. Kalle, USA 54530

Function	Function Description	a. Logic Failure b. FMN c. Detection Method d. Time to Effect	Failure Effect on System Performance	Failure Effect On System Performance, Vehicle Systems, And/Or Personnel Safety	Correcting Action Remarks	Crit Cat
		a. Erroneously commands run	No effect. Hoist will not operate until direction and speed are commanded with masterswitch.	No effect.	NA	NC
AH-10 53-58	Release Brakes	a. Fails to release brakes	Hoist will attempt to drive through brakes, requiring higher than normal current to achieve motion. Will cause excessive brake wear and possible brake damage.	No effect.	NA	NC
		a. Fails to set brakes	Regenerative braking of drive will bring hoist to a stop when stop is commanded. Brakes will set when drives drop off-line when velocity reaches zero. If brakes still fail to set, operator can press e-stop to halt all crane motion and set all brakes.	No effect.	NA	NC
AH-11 59-64	Control timing of brake release and drive run commands	a. Commands run and brake release out of sequence	Hoist will attempt to drive through brake until brake releases. Sudden change in resistance will cause Delta Tau to detect a following error, disabling hoist and setting brakes.	No effect.	NA	NC
AH-12 65-71	Command Bias torque based upon weighing system input	a. Commands low torque	Load will sag slightly when brakes are released until Delta Tau Controller increases armature current to achieve zero speed.	Possible loss (damage) of a vehicle system due to load contacting an obstruction if there is inadequate clearance.	Minimum movement is verified to be within .005 inches from brakes set to brakes released during acceptance testing.	C
		a. Commands high torque	Load will raise slightly when brakes are released until Delta Tau controller decreases armature current to achieve zero speed.	Possible loss (damage) of a vehicle system due to load contacting an obstruction if there is inadequate clearance.	Minimum movement is verified to be within .005 inches from brakes set to brakes released during acceptance testing.	C

Table 26. **SWRA - 325 Ton Bridge Crane**

System/Subsystem: 325 Ton Bridge Cranes at the Vehicle Assembly Building High Bays 1/2/3/4
Processor : GE 90-70 **Routine:** F-2281, F-2281A **Subroutine:**
Revision Date: February 1993

Date: May 1999
PMN: H72-1200-01, 02 **Station Set/Facility Code:** 20
Prepared By: B. Kalle, USA 54530

Function	Function Description	a. Logic Failure b. FMN c. Detection Method d. Time to Effect	Failure Effect on System Performance	Failure Effect On System Performance, Vehicle Systems, And/Or Personnel Safety	Correcting Action Remarks	Crit Cat
AH-13 72-73	Control brake forcing circuit	a. Fails to reduce brake current	Possible damage to brakes due to overheating. Brake failure will cause brake to set.	No effect.	NA	NC
		a. Fails to reset full brake release current	Brakes will not fully release and cause brake shoes to drag leading to excessive brake wear.	No effect.	Proper operation of brake release (free of binding and vibration) has been verified during acceptance testing.	NC
AH-14 74-97	Perform and verify torque proving	a. Fails to set proving bit	Hoist will not operate if proving bit is not set.	No effect.	NA	NC
		a. Erroneously sets proving bit	PLC will detect load imbalance as soon as current is commanded to the drives and prevent hoist from operating. Requires previous failure to cause torque proving failure.	No effect.	NA	NC
AH-15 98-100	Sends run command to hoist drive	a. Fails to send run command	Associated drive will not operate and fail torque proving. PLC will not allow hoist to operate.	No effect.	NA	NC
		a. Erroneously sends run command	No effect. Hoist will not operate until direction and speed commands are input from masterswitch.	No effect.	NA	NC
AH-16 101-105	Start and Stop cruise control functions	a. Fails to start cruise	Hoist will slow to zero velocity and brakes will set when Masterswitch is released.	No effect.	NA	NC

Table 26. **SWRA - 325 Ton Bridge Crane**

System/Subsystem: 325 Ton Bridge Cranes at the Vehicle Assembly Building High Bays 1/2/3/4
Processor : GE 90-70 **Routine:** F-2281, F-2281A **Subroutine:**
Revision Date: February 1993

Date: May 1999
PMN: H72-1200-01, 02 **Station Set/Facility Code:** 20
Prepared By: B. Kalle, USA 54530

Function	Function Description	a. Logic Failure b. FMN c. Detection Method d. Time to Effect	Failure Effect on System Performance	Failure Effect On System Performance, Vehicle Systems, And/Or Personnel Safety	Correcting Action Remarks	Crit Cat
		a. Fails to stop cruise (manual)	Hoist will continue cruise speed and direction when cruise stop is pressed. Operator can halt motion by switching off control power or by pressing e-stop.	Possible loss (damage) of a vehicle system due to contact of load to an obstruction if there is inadequate clearance.	Proper operation of cruise control stop has been verified during acceptance testing.	C
		a. Fails to stop cruise (PLC)	Hoist will continue cruise speed and direction when cruise termination parameter is met. Operator can halt motion by switching off control power or by pressing e-stop.	Possible loss (damage) of a vehicle system due to contact of load to an obstruction if there is inadequate clearance.	Proper operation of cruise control stop has been verified during acceptance testing.	C
AH-17 106-110	Clip speed command to set consistent first on and full speeds	a. Fails to clip	First on or full speed will vary slightly each time the hoist is moved.	No effect.	NA	NC
AH-18 111-120	Scale masterswitch input according to speed range selected	a. Fails to scale command	Speed command will not be scaled down when switching from coarse to fine speed. Hoist will operate in coarse speed when fine is selected. Operator can stop hoist by centering masterswitch, switching off control power, or pressing e-stop.	Possible loss (damage) to a vehicle system due to load contacting an obstruction if there is inadequate clearance when hoist accelerates faster than expected.	Proper operation of this function has been verified during acceptance testing by switching speed ranges and measuring load block speeds.	C
		a. Scales speed command continually	Hoist will operate in fine speed only.	No effect.	NA	NC

Table 26. **SWRA - 325 Ton Bridge Crane**

System/Subsystem: 325 Ton Bridge Cranes at the Vehicle Assembly Building High Bays 1/2/3/4
Processor : GE 90-70 **Routine:** F-2281, F-2281A **Subroutine:**
Revision Date: February 1993

Date: May 1999
PMN: H72-1200-01, 02 **Station Set/Facility Code:** 20
Prepared By: B. Kalle, USA 54530

Function	Function Description	a. Logic Failure b. FMN c. Detection Method d. Time to Effect	Failure Effect on System Performance	Failure Effect On System Performance, Vehicle Systems, And/Or Personnel Safety	Correcting Action Remarks	Crit Cat
AH-19 121-125	Clip speed command to set consistent first on and full speeds.	a. Fails to clip	First on or full speed will vary slightly each time the hoist is moved.	No effect.	NA	NC
AH-20 126	Scale masterswitch input for float speed range	a. Fails to scale command	Speed command will not be scaled down when switching to float mode. Hoist will operate in speed range selected on control panel when float is selected. Operator can stop hoist by releasing thumbswitch or Footswitch, switching off control power, or pressing e-stop.	Possible loss (damage) to a vehicle system due to load contacting an obstruction if there is inadequate clearance when hoist accelerates faster than expected.	Proper operation of this function has been verified during acceptance testing by switching speed ranges and measuring hoist speeds.	C
		a. Scales speed command continually	Hoist will operate in float speed only	No effect.	NA	NC
AH-21 127-128	Sends zero speed command to Delta Tau controller	a. Fails to send zero command	Hoist will slow to slowest possible speed and continue motion in direction last commanded. Operator can stop hoist by switching off control power or pressing E-stop.	Possible loss (damage) of a vehicle system due to load contacting an obstruction if there is inadequate clearance.	Proper performance of this function has been verified during acceptance testing by many cycles of hoist motion and observing hoist coming to a complete stop with brakes set.	C
		a. Sends zero command continually	Hoist brakes will release when motion is commanded but velocity commanded will be zero. Load will float with brakes released. Brakes will set when masterswitch is released or when float thumbswitch or footswitch is released.	No effect.	NA	NC

Table 26. **SWRA - 325 Ton Bridge Crane**

System/Subsystem: 325 Ton Bridge Cranes at the Vehicle Assembly Building High Bays 1/2/3/4
Processor : GE 90-70 **Routine:** F-2281, F-2281A **Subroutine:**
Revision Date: February 1993

Date: May 1999
PMN: H72-1200-01, 02 **Station Set/Facility Code:** 20
Prepared By: B. Kalle, USA 54530

Function	Function Description	a. Logic Failure b. FMN c. Detection Method d. Time to Effect	Failure Effect on System Performance	Failure Effect On System Performance, Vehicle Systems, And/Or Personnel Safety	Correcting Action Remarks	Crit Cat
AH-22 129-133	Sends direction command to Delta Tau controller	a. Sends wrong direction command	AFLTS subroutine will compare actual motion to masterswitch input and detect wrong direction. PLC will halt hoist and set brakes.	No effect.	NA	NC
AH-23 134-137	Sends start and stop bit to Delta Tau controller	a. Fails to send start bit	Delta Tau controller will not start hoist motion when commanded. PLC will release brakes but hoist will not move.	No effect.	NA	NC
		a. Fails to send stop bit	Delta Tau controller will bring hoist to a stop when commanded because zero speed will be commanded.	No effect.	NA	NC
B-1 3-9	Monitor error check registers for error bits that are set	a. Fails to detect error bit	Requires previous failure to cause error bit to be set. Bridge can continue to operate in failed condition if Delta Tau controller, drive, or PLC does not detect error by other means. Operator can halt operation of bridge and set brakes by switching off the control power or pressing e-stop.	Possible loss (damage) of a vehicle system if there is inadequate clearance between load and an obstruction.	Proper operation of error detection has been verified during acceptance testing by inducing simulated faults and observing crane detect fault and safe operation.	C
		a. Erroneously detects error	Bridge operation will be halted and brakes will be set.	No effect.	NA	NC
B-2 10-11	Verify drive select switch and circuit Breakers match	a. Fails to detect match	Requires previous failure of primary drive to cause switch change. PLC will detect drive not online and not allow bridge operation.	No effect.	NA	NC
		a. Erroneously detects mismatch	PLC will disable bridge operation	No effect.	NA	NC

Table 26. **SWRA - 325 Ton Bridge Crane**

System/Subsystem: 325 Ton Bridge Cranes at the Vehicle Assembly Building High Bays 1/2/3/4
Processor : GE 90-70 **Routine:** F-2281, F-2281A **Subroutine:**
Revision Date: February 1993

Date: May 1999
PMN: H72-1200-01, 02 **Station Set/Facility Code:** 20
Prepared By: B. Kalle, USA 54530

Function	Function Description	a. Logic Failure b. FMN c. Detection Method d. Time to Effect	Failure Effect on System Performance	Failure Effect On System Performance, Vehicle Systems, And/Or Personnel Safety	Correcting Action Remarks	Crit Cat
B-3 12-14	Active motor blowers from either North or South starters	a. Fails to start blowers	Motors will overheat from lack of cooling air. PLC will detect if motor overheats, disable bridge, and set brakes.	No effect.	NA	NC
		a. Energizes both starters	No effect. North and south 3 phase power will be cross connected.	No effect.	NA	NC
B-4 15-18	Output drive enable command to selected drive	a. Fails to enable drive	Bridge will not operate. Brakes will remain set.	No effect.	NA	NC
		a. Enable wrong drive	Bridge will not operate. Brakes will remain set.	No effect.	NA	NC
B-5 19-25	Configure bridge motor field circuit for selected drives	a. Fails to connect field windings	Bridge drive will detect loss of field. Drive will not operate. PLC will detect drive not enabled, halt bridge operation, and set brakes.	No effect.	NA	NC
		a. Cross connects field circuit	No effect. Bridge drives will operate normally.	No effect.	NA	NC
B-6 26-39	Read LVDT skew inputs and output data to Delta Tau motion controller	a. Fails to transfer data	Delta Tau will allow bridge to skew on rails.	No effect.	NA	NC
		a. Disables skew correction	Delta Tau will allow bridge to skew on rails.	No effect.	NA	NC
B-7 40-42	Command bridge drives to start operating	a. Fails to command run	Bridge will not operate. Brakes will remain set.	No effect.	NA	NC

Table 26. **SWRA - 325 Ton Bridge Crane**

System/Subsystem: 325 Ton Bridge Cranes at the Vehicle Assembly Building High Bays 1/2/3/4
Processor : GE 90-70 **Routine:** F-2281, F-2281A **Subroutine:**
Revision Date: February 1993

Date: May 1999
PMN: H72-1200-01, 02 **Station Set/Facility Code:** 20
Prepared By: B. Kalle, USA 54530

Function	Function Description	a. Logic Failure b. FMN c. Detection Method d. Time to Effect	Failure Effect on System Performance	Failure Effect On System Performance, Vehicle Systems, And/Or Personnel Safety	Correcting Action Remarks	Crit Cat
		a. Erroneously commands run	Brakes will release but bridge drives will not operate until Masterswitch is moved off center to command direction.	No effect.	NA	NC
B-8 43-46	Release Brakes	a. Fails to release brakes	Bridge will attempt to drive through brakes, requiring higher than normal current to achieve motion. Will cause excessive brake wear and possible brake damage.	No effect.	NA	NC
		a. Fails to set brakes	Brakes will not set, however, regenerative braking of drive will bring bridge to a stop when stop is commanded.	No effect.	NA	NC
B-9 47-52	Control timing of brake release and drive run commands	a. Commands run and brake release out of sequence	Bridge will attempt to drive through brake until brake releases. Sudden change in resistance will cause Delta Tau to detect a following error, disabling bridge and setting brakes.	No effect.	NA	NC
B-10 53-55	Command bridge drives to run	a. Fails to command run	Bridge drive will not operate. Brakes will release but bridge will not move.	No effect.	NA	NC
		a. Commands one only drive	PLC will detect drive not enabled and prevent bridge operation.	No effect.	NA	NC
B-11 56-60	Clip speed command to set consistent first on and full speeds	a. Fails to clip	First on or full speed will vary slightly each time the bridge is moved.	No effect.	NA	NC

Table 26. **SWRA - 325 Ton Bridge Crane**

System/Subsystem: 325 Ton Bridge Cranes at the Vehicle Assembly Building High Bays 1/2/3/4
Processor : GE 90-70 **Routine:** F-2281, F-2281A **Subroutine:**
Revision Date: February 1993

Date: May 1999
PMN: H72-1200-01, 02 **Station Set/Facility Code:** 20
Prepared By: B. Kalle, USA 54530

Function	Function Description	a. Logic Failure b. FMN c. Detection Method d. Time to Effect	Failure Effect on System Performance	Failure Effect On System Performance, Vehicle Systems, And/Or Personnel Safety	Correcting Action Remarks	Crit Cat
B-12 61-67	Scale masterswitch input according to speed range selected	a. Fails to scale command	Speed command will not be scaled down when switching from coarse to fine speed. Bridge will operate in coarse speed when five is selected. Operator can stop bridge by centering masterswitch, switching off control power, or pressing e-stop.	Possible loss (damage) to a vehicle system due to load contacting an obstruction if there is inadequate clearance when bridge accelerates faster than expected.	Proper operation of this function has been verified during acceptance testing by switching speed ranges and measuring motor speeds.	C
		a. Scales speed command continually	Bridge will operate in slow speed only.	No effect.	NA	NC
B-13 68-69	Sends zero speed command to Delta Tau controller	a. Fails to send zero command	Bridge will slow to slowest possible speed and continue motion in direction last commanded. Operator can stop bridge by switching off control power or pressing e-stop.	Possible loss (damage) of a vehicle system due to load contacting an obstruction if there is inadequate clearance.	Proper performance of this function has been verified during acceptance testing by many cycles of bridge motion and observing bridge coming to a complete stop with brakes set.	C
		a. Sends zero command continually	Bridge brakes will release when motion is commanded but bridge drive will not operate. Bridge will not move.	No effect.	NA	NC
B-14 70-75	Sends direction command to Delta Tau controller	a. Sends wrong direction command	BFLTS subroutine will compare actual motion to masterswitch Input and detect wrong direction. PLC will halt bridge and set brakes.	No effect.	NA	NC
B-15 76-79	Sends start and stop bit to Delta Tau controller	a. Fails to send start bit	Delta Tau controller will not start bridge motion when commanded. PLC will release brakes but bridge will not move.	No effect.	NA	NC

Table 26. **SWRA - 325 Ton Bridge Crane**

System/Subsystem: 325 Ton Bridge Cranes at the Vehicle Assembly Building High Bays 1/2/3/4
Processor : GE 90-70 **Routine:** F-2281, F-2281A **Subroutine:**
Revision Date: February 1993

Date: May 1999
PMN: H72-1200-01, 02 **Station Set/Facility Code:** 20
Prepared By: B. Kalle, USA 54530

Function	Function Description	a. Logic Failure b. FMN c. Detection Method d. Time to Effect	Failure Effect on System Performance	Failure Effect On System Performance, Vehicle Systems, And/Or Personnel Safety	Correcting Action Remarks	Crit Cat
		a. Fails to send stop bit	Delta Tau controller will bring bridge to a stop when commanded because zero speed will be commanded.	No effect.	NA	NC
B-16 80-81	Detect motor overload and set error bit	a. Fails to detect overload	Requires previous failure to cause overload. Overload will lead to motor or drive failure causing bridge to halt and brakes to set.	No effect.	NA	NC
		a. Erroneously detects overload	PLC will halt bridge operation and set brakes.	No effect.	NA	NC
T-1 3-9	Monitor error check registers for error bits that are set.	a. Fails to detect error bit	Requires previous failure to cause error bit to be set. Trolley can continue to operate in failed condition if Delta Tau controller, drive, or PLC does not detect error by other means. Operator can halt operation of trolley and set brakes by switching off the control power or pressing e-stop.	Possible loss (damage) of a vehicle system if there is inadequate clearance between load and an obstruction.	Proper operation of error detection has been verified during acceptance testing by inducing simulated faults and observing crane detect fault and safe operation.	C
		a. Erroneously detects error	Trolley operation will be halted and brakes will be set.	No effect.	NA	NC
T-2 10-14	Verify drive select switch and circuit Breakers match	a. Fails to detect mismatch	Requires previous failure of primary drive to cause switch change. PLC will detect drive not online and not allow trolley operation.	No effect.	NA	NC
		a. Erroneously detects mismatch	PLC will disable trolley operation.	No effect.	NA	NC
T-3 15-17	Activate motor blowers from either primary or secondary starters	a. Fails to start blowers	Motors will overheat from lack of cooling air. PLC will detect if motor overheats, disable trolley, and set brakes.	No effect.	NA	NC

Table 26. **SWRA - 325 Ton Bridge Crane**

System/Subsystem: 325 Ton Bridge Cranes at the Vehicle Assembly Building High Bays 1/2/3/4
Processor : GE 90-70 **Routine:** F-2281, F-2281A **Subroutine:**
Revision Date: February 1993

Date: May 1999
PMN: H72-1200-01, 02 **Station Set/Facility Code:** 20
Prepared By: B. Kalle, USA 54530

Function	Function Description	a. Logic Failure b. FMN c. Detection Method d. Time to Effect	Failure Effect on System Performance	Failure Effect On System Performance, Vehicle Systems, And/Or Personnel Safety	Correcting Action Remarks	Crit Cat
		a. Energizes both starters	No effect. Primary and secondary 3 phase power will be cross connected.	No effect.	NA	NC
T-4 18-21	Output drive enable command to selected drive	a. Fails to enable drive	Trolley will not operate. Brakes will remain set.	No effect.	NA	NC
		a. Enable wrong drive	Trolley will not operate. Brakes will remain set.	No effect.	NA	NC
T-5 22-24	Command Trolley drive to start operating	a. Fails to command run	Trolley will not operate. Brakes will remain set.	No effect.	NA	NC
		a. Erroneously commands run	Brakes will release but Trolley drive will not operate until masterswitch is moved off center to command direction.	No effect.	NA	NC
T-6 25-28	Release Brakes	a. Fails to release brakes	Trolley will attempt to drive through brakes, requiring higher than normal current to achieve motion. Will cause excessive brake wear and possible brake damage.	No effect.	NA	NC
		a. Fails to set brakes	Brakes will not set, however, regenerative braking of drive will bring Trolley to a stop when stop is commanded.	No effect.	NA	NC
T-7 29-34	Control timing of brake release and drive run commands	a. Commands run and brake release out of sequence	Trolley will attempt to drive through brake until brake releases. Sudden change in resistance will cause Delta Tau to detect a following error, disabling trolley and setting brakes.	No effect.	NA	NC
T-8 35-37	Command Trolley drive to run	a. Fails to command run	Trolley drive will not operate. Brakes will release but trolley will not move.	No effect.	NA	NC

Table 26. **SWRA - 325 Ton Bridge Crane**

System/Subsystem: 325 Ton Bridge Cranes at the Vehicle Assembly Building High Bays 1/2/3/4
Processor : GE 90-70 **Routine:** F-2281, F-2281A **Subroutine:**
Revision Date: February 1993

Date: May 1999
PMN: H72-1200-01, 02 **Station Set/Facility Code:** 20
Prepared By: B. Kalle, USA 54530

Function	Function Description	a. Logic Failure b. FMN c. Detection Method d. Time to Effect	Failure Effect on System Performance	Failure Effect On System Performance, Vehicle Systems, And/Or Personnel Safety	Correcting Action Remarks	Crit Cat
		a. Commands wrong drive	Trolley drive will not operate. Brakes will release but trolley will not move.	No effect.	NA	NC
T-9 38-42	Clip speed command to set consistent first on and full speeds	a. Fails to clip	First on or full speed will vary slightly each time the Trolley is moved.	No effect.	NA	NC
T-10 43-49	Scale masterswitch input according to speed range selected	a. Fails to scale command	Speed command will not be scaled down when switching from coarse to fine speed. Trolley will operate in coarse speed when five is selected. Operator can stop Trolley by centering masterswitch, switching off control power, or pressing e-stop.	Possible loss (damage) to a vehicle system due to load contacting an obstruction if there is inadequate clearance when Trolley accelerates faster than expected.	Proper operation of this function has been verified during acceptance testing by switching speed ranges and measuring motor speeds.	C
		a. Scales speed command continually	Trolley will operate in slow speed only.	No effect.	NA	NC
T-11 50-51	Sends zero speed command to Delta Tau controller.	a. Fails to send zero command	Trolley will slow to slowest possible speed and continue motion in direction last commanded. Operator can stop trolley by switching off control power or pressing e-stop.	Possible loss (damage) of a vehicle system due to load contacting an obstruction if there is inadequate clearance.	Proper performance of this function has been verified during acceptance testing by many cycles of Trolley motion and observing Trolley coming to a complete stop with brakes set.	C

Table 26. **SWRA - 325 Ton Bridge Crane**

System/Subsystem: 325 Ton Bridge Cranes at the Vehicle Assembly Building High Bays 1/2/3/4
Processor : GE 90-70 **Routine:** F-2281, F-2281A **Subroutine:**
Revision Date: February 1993

Date: May 1999
PMN: H72-1200-01, 02 **Station Set/Facility Code:** 20
Prepared By: B. Kalle, USA 54530

Function	Function Description	a. Logic Failure b. FMN c. Detection Method d. Time to Effect	Failure Effect on System Performance	Failure Effect On System Performance, Vehicle Systems, And/Or Personnel Safety	Correcting Action Remarks	Crit Cat
		a. Sends zero command continually	Trolley brakes will release when motion is commanded but Trolley drive will not operate. Trolley will not move.	No effect.	NA	NC
T-12 52-57	Sends direction command to Delta Tau controller	a. Sends wrong direction command	TFLTS subroutine will compare actual motion to masterswitch input and detect wrong direction. PLC will halt Trolley and set brakes.	No effect.	NA	NC
T-13 58-61	Sends start and stop bit to Delta Tau controller	a. Fails to send start bit	Delta Tau controller will not start trolley motion when commanded. PLC will release brakes but Trolley will not move.	No effect.	NA	NC
		a. Fails to send stop bit	Delta Tau controller will bring trolley to a stop when commanded because zero speed will be commanded.	No effect.	NA	NC
T-14 62-65	Detect motor overload and set error bit	a. Fails to detect overload	Requires previous failure to cause overload. Overload will lead to motor or drive failure causing Trolley to halt and brakes to set.	No effect.	NA	NC
		a. Erroneously detects overload	PLC will halt Trolley operation and set brakes.	No effect.	NA	NC
D-1 3-5 15-16 25-26 29-30 34-35 38-39	Select data source commanded by control switch	a. Fails to switch sources	Display will continue to display data from other source. Data from other source is valid unless a failure has previously occurred.	No effect.	Proper operation of switching sources has been verified during system acceptance testing.	NC

Table 26. **SWRA - 325 Ton Bridge Crane**

System/Subsystem: 325 Ton Bridge Cranes at the Vehicle Assembly Building High Bays 1/2/3/4
Processor : GE 90-70 **Routine:** F-2281, F-2281A **Subroutine:**
Revision Date: February 1993

Date: May 1999
PMN: H72-1200-01, 02 **Station Set/Facility Code:** 20
Prepared By: B. Kalle, USA 54530

Function	Function Description	a. Logic Failure b. FMN c. Detection Method d. Time to Effect	Failure Effect on System Performance	Failure Effect On System Performance, Vehicle Systems, And/Or Personnel Safety	Correcting Action Remarks	Crit Cat
D-2 6-7 17-18 27-28 36-37	Set reset bit and set position equal to zero if reset button is pressed	a. Fails to set position to zero	No effect. Position display will not change.	No effect.	NA	NC
D-3 8-14 19-24 31-33 40-42	Transfer position information for use by prolog position display computers	a. Fails to transfer position data	Position display(s) will not update with current position Information. Operator will not see commanded crane motion displayed on position indicators. Operator can stop crane motion by centering masterswitch, switching off control power, or by pressing e-stop.	Possible loss (damage) of a vehicle system due to contact of load to an obstruction if there is inadequate clearance.	Proper performance and accuracy of position displays has been verified during acceptance testing.	C
MR-1 3-4	Controls output which initializes Linear Actuator Controller	a. Fails to Initialize	Unable to engage or disengage hook rotation.	No effect.	NA	NC
		a. Fails to Deactivate	No effect.	No effect.	NA	NC
MR-2 5-9	Controls Linear Actuator which engages and disengages hook rotation drive.	a. Fails to engage	Unable to rotate load.	No effect.	NA	NC
		a. Fails to disengage	Unable to disengage hook rotation.	No effect.	NA	NC

Table 26. **SWRA - 325 Ton Bridge Crane**

System/Subsystem: 325 Ton Bridge Cranes at the Vehicle Assembly Building High Bays 1/2/3/4
Processor : GE 90-70 **Routine:** F-2281, F-2281A **Subroutine:**
Revision Date: February 1993

Date: May 1999
PMN: H72-1200-01, 02 **Station Set/Facility Code:** 20
Prepared By: B. Kalle, USA 54530

Function	Function Description	a. Logic Failure b. FMN c. Detection Method d. Time to Effect	Failure Effect on System Performance	Failure Effect On System Performance, Vehicle Systems, And/Or Personnel Safety	Correcting Action Remarks	Crit Cat
MR-3 10-47	Reads rotate resolver inputs and calculates position value for position display	a. Fails to read resolver bit input	Position display will operate normally until the missing bit fails to transition. The position will jump a certain amount depending on which bit has failed.	Possible loss (damage) of a vehicle system due to contact of load to an obstruction if there is inadequate clearance.	Proper operation and accuracy of the position display has been verified during acceptance testing.	C
MR-4 48-49	Disable hoist rotate motor if an overtemp condition is detected	a. Fails to detect overtemp	Possible damage to hoist rotate motor and controller. Hoist rotate will stop operating when damage occurs due to overtemp.	No effect.	NA	NC
		a. Erroneously detects overtemp	Hoist rotate will not operate.	No effect.	NA	NC
MR-5 50	Control run command to rotate motor controller	a. Fails to command run	Hoist rotate will not operate until run command enables motor controller.	No effect.	NA	NC
		a. Erroneously commands run	Hoist rotate will not operate until run command enables motor controller.	No effect.	NA	NC
MR-6 50	Control start command to rotate motor controller	a. Fails to command start	Hoist rotate will not operate until start command enables motor controller.	No effect.	NA	NC
		a. Erroneously commands start	No effect. Hoist rotate motor controller will not operate until run, direction, and speed commands are present.	No effect.	NA	NC

Table 26. **SWRA - 325 Ton Bridge Crane**

System/Subsystem: 325 Ton Bridge Cranes at the Vehicle Assembly Building High Bays 1/2/3/4
Processor : GE 90-70 **Routine:** F-2281, F-2281A **Subroutine:**
Revision Date: February 1993

Date: May 1999
PMN: H72-1200-01, 02 **Station Set/Facility Code:** 20
Prepared By: B. Kalle, USA 54530

Function	Function Description	a. Logic Failure b. FMN c. Detection Method d. Time to Effect	Failure Effect on System Performance	Failure Effect On System Performance, Vehicle Systems, And/Or Personnel Safety	Correcting Action Remarks	Crit Cat
MR-7 50-59	Control direction command to rotate motor controller	a. Fails to command direction	Hoist rotate will not operate until direction command is present at rotate motor controller.	No effect.	NA	NC
		a. Commands wrong direction	Hoist rotate motion will be in direction opposite of command. Operator can halt rotate motion by centering rotate potentiometer, switching off control power, or by pressing e-stop.	Possible loss (damage) of a vehicle system due to contact of load to an obstruction if there is inadequate clearance.	Proper operation of hook rotation control and accuracy has been verified during acceptance testing.	C
MR-8 60-62	Detect rotate limit switch and halt rotate motion	a. Fails to stop rotation	Load can continue to rotate past limit. Possible damage to remote weighing system if stress is applied to load pin cable.	No effect.	NA	NC
		a. Erroneously detects limit	Load rotation will not be allowed to rotate in direction of falsely detected limit.	No effect.	NA	NC
AR-1 3-5	Controls Linear Actuator which engages and disengages hook rotation drive	a. Fails to engage	Unable to rotate load.	No effect.	NA	NC
		a. Fails to disengage	Unable to disengage hook rotation.	No effect.	NA	NC

Table 26. **SWRA - 325 Ton Bridge Crane**

System/Subsystem: 325 Ton Bridge Cranes at the Vehicle Assembly Building High Bays 1/2/3/4
Processor : GE 90-70 **Routine:** F-2281, F-2281A **Subroutine:**
Revision Date: February 1993

Date: May 1999
PMN: H72-1200-01, 02 **Station Set/Facility Code:** 20
Prepared By: B. Kalle, USA 54530

Function	Function Description	a. Logic Failure b. FMN c. Detection Method d. Time to Effect	Failure Effect on System Performance	Failure Effect On System Performance, Vehicle Systems, And/Or Personnel Safety	Correcting Action Remarks	Crit Cat
AR-2 6-49	Reads rotate resolver inputs and calculates position value for position display.	a. Fails to read resolver bit input	Position display will operate normally until the missing bit Fails to transition. The position will jump a certain amount depending on which bit has failed.	Possible loss (damage) of a vehicle system due to contact of load to an obstruction if there is inadequate clearance.	Proper operation and accuracy of the position display has been verified during acceptance testing.	C
AR-3 50-51	Control run command to rotate motor controller	a. Fails to command run	Hoist rotate will not operate until run command enables motor controller.	No effect.	NA	NC
		a. Erroneously commands run	No effect. Hoist rotate motor controller will not operate until start, direction, and speed commands are present.	No effect.	NA	NC
AR-4 50-51	Control start command to rotate motor controller	a. Fails to command start	Hoist rotate will not operate until start command enables motor controller.	No effect.	NA	NC
		a. Erroneously commands start	No effect. Hoist rotate motor controller will not operate until run, direction, and speed commands are present.	No effect.	NA	NC
AR-5 50-59	Control direction command to rotate motor controller.	a. Fails to command direction	Hoist rotate will not operate until direction command is present at rotate motor controller.	No effect.	NA	NC

Table 26. **SWRA - 325 Ton Bridge Crane**

System/Subsystem: 325 Ton Bridge Cranes at the Vehicle Assembly Building High Bays 1/2/3/4
Processor : GE 90-70 **Routine:** F-2281, F-2281A **Subroutine:**
Revision Date: February 1993

Date: May 1999
PMN: H72-1200-01, 02 **Station Set/Facility Code:** 20
Prepared By: B. Kalle, USA 54530

Function	Function Description	a. Logic Failure b. FMN c. Detection Method d. Time to Effect	Failure Effect on System Performance	Failure Effect On System Performance, Vehicle Systems, And/Or Personnel Safety	Correcting Action Remarks	Crit Cat
		a. Commands wrong direction	Hoist rotate motion will be in direction opposite of command. Operator can halt rotate motion by centering rotate potentiometer, switching off control power, or by pressing e-stop.	Possible loss (damage) of a vehicle system due to contact of load to an obstruction if there is inadequate clearance.	Proper operation of hook rotation control and accuracy has been verified during acceptance testing.	C
AR-6 60-62	Detect rotate limit switch and halt rotate motion	a. Fails to stop rotation	Load can continue to rotate past limit. Possible damage to remote weighing system if stress is applied to load pin cable.	No effect.	NA	NC
		a. Erroneously detects limit	Load rotation will not be allowed to rotate in direction of falsely detected limit.	No effect.	NA	NC
MF-1 4-9	Detect low motor field current and set error bit.	a. Fails to set error bit	Requires previous failure to cause field loss. Motor control module will detect field loss, disable drive and cause brakes to set.	No effect.	NA	NC
		a. Erroneously sets error bit	PLC will halt hoist operation and set brakes.	No effect.	NA	NC
MF-2 10-15	Detect loss of SCR cooling and set error bit	a. Fails to set error bit	Requires previous failure to cause cooling failure. SCR failure will result in armature current imbalance which will be detected by PLC. PLC will halt hoist operation and set brakes.	No effect.	NA	NC
		a. Erroneously sets error bit	PLC will halt hoist operation and set brakes.	No effect.	NA	NC

Table 26. **SWRA - 325 Ton Bridge Crane**

System/Subsystem: 325 Ton Bridge Cranes at the Vehicle Assembly Building High Bays 1/2/3/4
Processor : GE 90-70 **Routine:** F-2281, F-2281A **Subroutine:**
Revision Date: February 1993

Date: May 1999
PMN: H72-1200-01, 02 **Station Set/Facility Code:** 20
Prepared By: B. Kalle, USA 54530

Function	Function Description	a. Logic Failure b. FMN c. Detection Method d. Time to Effect	Failure Effect on System Performance	Failure Effect On System Performance, Vehicle Systems, And/Or Personnel Safety	Correcting Action Remarks	Crit Cat
MF-3 16-19	Detect masterswitch output greater than 0.5 volts when Masterswitch is in the off position.	a. Fails to detect erroneous voltage	Requires previous failure to cause erroneous voltage. Hoist will accelerate to level determined by voltage level when masterswitch is moved off center.	Possible loss (damage) of a vehicle system due to contact of load to an obstruction if there is inadequate clearance. Operator can halt hoist motion by centering masterswitch, turning off control power, or pressing e-stop.	Proper operation of this error check has been verified by applying a voltage greater than 0.5 volts to the input and confirming that the hoist is disabled and the brakes are set.	C
		a. Erroneously sets error bit	PLC will halt hoist operation and set brakes.	No effect.	NA	NC
MF-4 20-23	Detect DAC output greater than 0.5 volts when hoist is disabled	a. Fails to detect erroneous voltage	Requires previous failure to cause erroneous error. This current command will cause an armature current imbalance which will be detected by the PLC. PLC will disable the hoist and set brakes.	No effect.	NA	NC
		a. Erroneously sets error bit	PLC will halt hoist operation and set brakes.	No effect.	NA	NC
MF-5 24-26	Detects following error from Delta Tau motion controller and sets error bit	a. Fails to detect following error	Requires previous failure to cause following error.	No effect.	NA	NC
		a. Erroneously sets error bit	PLC will halt hoist operation and set brakes.	No effect.	NA	NC

Table 26. **SWRA - 325 Ton Bridge Crane**

System/Subsystem: 325 Ton Bridge Cranes at the Vehicle Assembly Building High Bays 1/2/3/4
Processor : GE 90-70 **Routine:** F-2281, F-2281A **Subroutine:**
Revision Date: February 1993

Date: May 1999
PMN: H72-1200-01, 02 **Station Set/Facility Code:** 20
Prepared By: B. Kalle, USA 54530

Function	Function Description	a. Logic Failure b. FMN c. Detection Method d. Time to Effect	Failure Effect on System Performance	Failure Effect On System Performance, Vehicle Systems, And/Or Personnel Safety	Correcting Action Remarks	Crit Cat
MF-6 27-38	Detects overspeed of hoist for each speed range and sets error bit.	a. Fails to detect overspeed	Requires previous failures to cause overspeed.	No effect.	Overspeed detection is tested during acceptance testing for proper performance.	NC
		a. Erroneously sets error bit	PLC will halt hoist operation and set brakes.	No effect.	NA	NC
MF-7 39-46	Detects excessive acceleration signal from Delta Tau controller and sets error bit.	a. Fails to detect excessive acceleration	Requires previous failures to cause excessive acceleration and failure of drive to limit acceleration.	No effect.	NA	NC
		a. Erroneously sets error bit	PLC will halt hoist operation and set brakes.	No effect.	NA	NC
MF-8 47-55	Detect hoist operating in wrong direction and set error bit	a. Fails to detect wrong direction	Requires previous failure to cause hoist to operate in wrong direction.	Possible loss (damage) of a vehicle system due to contact of load to obstruction if there is inadequate clearance.	Proper operation of this function has been verified during system testing by forcing hoist to operate in the wrong direction and observing that the PLC halts hoist motion and sets brakes.	C
		a. Erroneously sets error bit	PLC will halt hoist operation and set brakes.	No effect.	NA	NC
MF-9 56-57	Compares East and West encoders to detect feedback errors	a. Fails to detect encoder error	Delta Tau motion controller will detect following error or loss of feedback causing PLC to halt hoist operation and set brakes.	No effect.	NA	NC

Table 26. **SWRA - 325 Ton Bridge Crane**

System/Subsystem: 325 Ton Bridge Cranes at the Vehicle Assembly Building High Bays 1/2/3/4
Processor : GE 90-70 **Routine:** F-2281, F-2281A **Subroutine:**
Revision Date: February 1993

Date: May 1999
PMN: H72-1200-01, 02 **Station Set/Facility Code:** 20
Prepared By: B. Kalle, USA 54530

Function	Function Description	a. Logic Failure b. FMN c. Detection Method d. Time to Effect	Failure Effect on System Performance	Failure Effect On System Performance, Vehicle Systems, And/Or Personnel Safety	Correcting Action Remarks	Crit Cat
		a. Erroneously sets error bit	PLC will halt hoist operation and set brakes.	No effect.	NA	NC
MF-10 58-63	Compares encoder to tachometer to verify correct encoder operation and set error bit.	a. Fails to detect encoder loss	No effect. MF-9 will detect encoder loss.	No effect.	NA	NC
		a. Erroneously sets error bit	PLC will halt hoist operation and set brakes.	No effect.	NA	NC
MF-11 64-66	Detects torque proving failure and disables hoist until failed drive is locked out by switching off the drive circuit Breaker and switching the drive selector switch.	a. Fails to disable hoist when torque proving fails	PLC will detect load imbalance between armature currents. PLC will disable hoist operation and set brakes.	No effect.	NA	NC
		a. Erroneously sets error bit	PLC will halt hoist operation and set brakes.	No effect.	NA	NC
MF-12 67-73	Compares the two hoist load weighing systems and disables hoist if they do not match.	a. Fails to detect load system imbalance	PLC will not set proper torque bias on drives. Load will sag or rise slightly when brakes are released. Requires previous failure of weighing system.	No effect.	NA	NC

Table 26. **SWRA - 325 Ton Bridge Crane**

System/Subsystem: 325 Ton Bridge Cranes at the Vehicle Assembly Building High Bays 1/2/3/4
Processor : GE 90-70 **Routine:** F-2281, F-2281A **Subroutine:**
Revision Date: February 1993

Date: May 1999
PMN: H72-1200-01, 02 **Station Set/Facility Code:** 20
Prepared By: B. Kalle, USA 54530

Function	Function Description	a. Logic Failure b. FMN c. Detection Method d. Time to Effect	Failure Effect on System Performance	Failure Effect On System Performance, Vehicle Systems, And/Or Personnel Safety	Correcting Action Remarks	Crit Cat
		a. Erroneously sets error bit	PLC will halt hoist operation and set brakes.	No effect.	NA	NC
MF-13 74-76	Detect upper or lower limit switch trip and set error bit.	a. Fails to detect limit switch trip	Final weighted upper limit switch will prevent Two-blocking. Observers will prevent load block contact on floor or Back-winding.	No effect.	NA	NC
		a. Erroneously sets error bit	PLC will halt hoist operation and set brakes.	No effect.	NA	NC
MF-14 77-79	Detect hoist overload trip and set error bit	a. Fails to detect overload	Requires previous failure to cause overload. PLC will detect load imbalance between overloaded drive and normal drive. PLC will halt hoist operation and set brakes.	No effect.	NA	NC
		a. Erroneously sets error bit	PLC will halt hoist operation and set brakes.	No effect.	NA	NC
MF-15 80-82	Detect rope spooling limit switch trip and set error bit.	a. Fails to detect limit switch trip	Requires previous rope spooling error. If misspooling continues, PLC will detect equalizer limit switch trip, halt hoist operation, and set brakes. If misspooling causes damage to wire rope and wire rope fails, redundant wire rope will support load.	No effect.	NA	NC
		a. Erroneously sets error bit	PLC will halt hoist operation and set brakes.	No effect.	NA	NC
MF-16 83-85	Detect equalizer limit switch trip and set error bit.	a. Fails to detect limit switch trip	Requires previous rope spooling error to cause equalizer limit switch trip. PLC will detect rope spooling error, halt hoist operation, and set brakes.	No effect.	NA	NC
		a. Erroneously sets error bit	PLC will halt hoist operation and set brakes.	No effect.	NA	NC

Table 26. **SWRA - 325 Ton Bridge Crane**

System/Subsystem: 325 Ton Bridge Cranes at the Vehicle Assembly Building High Bays 1/2/3/4
Processor : GE 90-70 **Routine:** F-2281, F-2281A **Subroutine:**
Revision Date: February 1993

Date: May 1999
PMN: H72-1200-01, 02 **Station Set/Facility Code:** 20
Prepared By: B. Kalle, USA 54530

Function	Function Description	a. Logic Failure b. FMN c. Detection Method d. Time to Effect	Failure Effect on System Performance	Failure Effect On System Performance, Vehicle Systems, And/Or Personnel Safety	Correcting Action Remarks	Crit Cat
MF-17 86-88	Detect thermal shutdown signal and set error bit	a. Fails to detect shut down signal	Requires previous failure to cause thermal shutdown condition. Overtemp condition will cause drive to fail. PLC will detect loss of drive, halt hoist operation, and set brakes.	No effect.	NA	NC
		a. Erroneously sets error bit	PLC will halt hoist operation and set brakes.	No effect.	NA	NC
MF-18 89-91	Detect blower overload and set error bit	a. Fails to detect overload	Requires previous failure to cause overload. Loss of blower will cause associated motor to overheat. Overtemp condition will be detected by PLC. PLC will halt hoist operation and set brakes.	No effect.	NA	NC
		a. Erroneously sets error bit	PLC will halt hoist operation and set brakes.	No effect.	NA	NC
AF-1 4-9	Detect low motor field current and set error bit	a. Fails to set error bit	Requires previous failure to cause field loss. Motor control module will detect field loss, disable drive and cause brakes to set.	No effect.	NA	NC
		a. Erroneously sets error bit	PLC will halt hoist operation and set brakes.	No effect.	NA	NC
AF-2 10-15	Detect loss of SCR cooling and set error bit.	a. Fails to set error bit	Requires previous failure to cause cooling failure. SCR failure will result in armature current imbalance which will be detected by PLC. PLC will halt hoist operation and set brakes.	No effect.	NA	NC
		a. Erroneously sets error bit	PLC will halt hoist operation and set brakes.	No effect.	NA	NC

Table 26. **SWRA - 325 Ton Bridge Crane**

System/Subsystem: 325 Ton Bridge Cranes at the Vehicle Assembly Building High Bays 1/2/3/4
Processor : GE 90-70 **Routine:** F-2281, F-2281A **Subroutine:**
Revision Date: February 1993

Date: May 1999
PMN: H72-1200-01, 02 **Station Set/Facility Code:** 20
Prepared By: B. Kalle, USA 54530

Function	Function Description	a. Logic Failure b. FMN c. Detection Method d. Time to Effect	Failure Effect on System Performance	Failure Effect On System Performance, Vehicle Systems, And/Or Personnel Safety	Correcting Action Remarks	Crit Cat
AF-3 16-19	Detect masterswitch output greater than 0.5 volts when masterswitch is in the OFF position.	a. Fails to detect erroneous voltage	Requires previous failure to cause erroneous voltage. Hoist will accelerate to level determined by voltage level when masterswitch is moved off center.	Possible loss (damage) of a vehicle system due to contact of load to an obstruction if there is inadequate clearance. Operator can halt hoist motion by centering masterswitch, turning off control power, or pressing e-stop.	Proper operation of this error check has been verified by applying a voltage greater than 0.5 volts to the input and confirming that the hoist is disabled and the brakes are set.	NC
		a. Erroneously sets error bit	PLC will halt hoist operation and set brakes.	No effect.	NA	NC
AF-4 20-24	Detect DAC output greater than 0.5 volts when hoist is disabled	a. Fails to detect erroneous voltage	Requires previous failure to cause erroneous output. This current command will cause an armature current imbalance which will be detected by the PLC. PLC will disable the hoist and set brakes.	No effect.	NA	NC
		a. Erroneously sets error bit	PLC will halt hoist operation and set brakes.	No effect.	NA	NC
AF-5 25-26	Detects following error from Delta Tau motion controller and set error bits	a. Fails to detect following error	Requires previous failure to cause following error.	No effect.	NA	NC
		a. Erroneously sets error bit	PLC will halt hoist operation and set brakes.	No effect.	NA	NC

Table 26. **SWRA - 325 Ton Bridge Crane**

System/Subsystem: 325 Ton Bridge Cranes at the Vehicle Assembly Building High Bays 1/2/3/4
Processor : GE 90-70 **Routine:** F-2281, F-2281A **Subroutine:**
Revision Date: February 1993

Date: May 1999
PMN: H72-1200-01, 02 **Station Set/Facility Code:** 20
Prepared By: B. Kalle, USA 54530

Function	Function Description	a. Logic Failure b. FMN c. Detection Method d. Time to Effect	Failure Effect on System Performance	Failure Effect On System Performance, Vehicle Systems, And/Or Personnel Safety	Correcting Action Remarks	Crit Cat
AF-6 27-38	Detects overspeed of hoist for each speed range and sets error bit.	a. Fails to detect overspeed	Requires previous failure to cause overspeed.	No effect.	Overspeed detection is tested during acceptance testing for proper performance.	NC
		a. Erroneously sets error bit	PLC will halt hoist operation and set brakes.	No effect.	NA	NC
AF-7 39-44	Detects excessive acceleration signal from Delta Tau controller and sets error bit.	a. Fails to detect excessive acceleration	Requires previous failures to cause excessive acceleration and failure of drive to limit acceleration.	No effect.	NA	NC
		a. Erroneously sets error bit	PLC will halt hoist operation and set brakes.	No effect.	NA	NC
AF-8 45-52	Detect hoist operating in wrong direction and set error bit	a. Fails to detect wrong direction	Requires previous failure to cause hoist to operate in wrong direction.	Possible loss (damage) of a vehicle system due to contact of load to obstruction if there is inadequate clearance.	Proper operation of this function has been verified during system testing by forcing hoist to operate in the wrong direction and observing that the PLC halts hoist motion and sets brakes.	C
		a. Erroneously sets error bit	PLC will halt hoist operation and set brakes.	No effect.	NA	NC
AF-9 53-54	Compares East and West encoders to detect feedback errors	a. Fails to detect encoder error	Delta Tau motion controller will detect following error or loss of feedback causing PLC to halt hoist operation and set brakes.	No effect.	NA	NC

Table 26. **SWRA - 325 Ton Bridge Crane**

System/Subsystem: 325 Ton Bridge Cranes at the Vehicle Assembly Building High Bays 1/2/3/4
Processor : GE 90-70 **Routine:** F-2281, F-2281A **Subroutine:**
Revision Date: February 1993

Date: May 1999
PMN: H72-1200-01, 02 **Station Set/Facility Code:** 20
Prepared By: B. Kalle, USA 54530

Function	Function Description	a. Logic Failure b. FMN c. Detection Method d. Time to Effect	Failure Effect on System Performance	Failure Effect On System Performance, Vehicle Systems, And/Or Personnel Safety	Correcting Action Remarks	Crit Cat
		a. Erroneously sets error bit	PLC will halt hoist operation and set brakes.	No effect.	NA	NC
AF-10 55-60	Compares encoder to tachometer to verify correct encoder operation and sets error bit	a. Fails to detect encoder loss	No effect. AF-9 will detect encoder loss.	No effect.	NA	NC
		a. Erroneously sets error bit	PLC will halt hoist operation and set brakes.	No effect.	NA	NC
AF-11 61-63	Detects torque proving failure and disables hoist until failed drive is locked out by switching off the drive circuit Breaker and switching the drive selector switch.	a. Fails to disable hoist when torque proving fails	PLC will detect load imbalance between armature currents. PLC will disable hoist operation and set brakes.	No effect.	NA	NC
		a. Erroneously sets error bit	PLC will halt hoist operation and set brakes.	No effect.	NA	NC
AF-12 64-70	Compares the two hoist load weighing systems and disables hoist if they do not match	a. Fails to detect load system imbalance	PLC will not set proper torque bias on drives. Load will sag or rise slightly when brakes are released. Previous failure of weighing system required.	No effect.	NA	NC

Table 26. **SWRA - 325 Ton Bridge Crane**

System/Subsystem: 325 Ton Bridge Cranes at the Vehicle Assembly Building High Bays 1/2/3/4
Processor : GE 90-70 **Routine:** F-2281, F-2281A **Subroutine:**
Revision Date: February 1993

Date: May 1999
PMN: H72-1200-01, 02 **Station Set/Facility Code:** 20
Prepared By: B. Kalle, USA 54530

Function	Function Description	a. Logic Failure b. FMN c. Detection Method d. Time to Effect	Failure Effect on System Performance	Failure Effect On System Performance, Vehicle Systems, And/Or Personnel Safety	Correcting Action Remarks	Crit Cat
		a. Erroneously sets error bit	PLC will halt hoist operation and set brakes.	No effect.	NA	NC
AF-13 71-73	Detect upper or lower limit switch trip and set error bit	a. Fails to detect limit switch trip	Final weighted upper limit switch will prevent Two-blocking. Observers will prevent load block contact on floor or back-winding.	No effect.	NA	NC
		a. Erroneously sets error bit	PLC will halt hoist operation and set brakes.	No effect.	NA	NC
AF-14 74-76	Detect hoist overload trip and set error bit	a. Fails to detect overload	Requires previous failure to cause overload. PLC will detect load imbalance between overloaded drive and normal drive. PLC will halt hoist operation and set brakes.	No effect.	NA	NC
		a. Erroneously sets error bit	PLC will halt hoist operation and set brakes.	No effect.	NA	NC
AF-15 77-79	Detect rope spooling limit switch and set error bit	a. Fails to detect limit switch trip	Requires previous rope spooling error. If misspooling continues, PLC will detect equalizer limit switch trip, halt hoist operation, and set brakes. If misspooling causes damage to wire rope and wire rope fails, redundant wire rope will support load.	No effect.	NA	NC
		a. Erroneously sets error bit	PLC will halt hoist operation and set brakes.	No effect.	NA	NC
AF-16 80-82	Detect equalizer limit switch trip and set error bit.	a. Fails to detect limit switch trip	Requires previous rope spooling error to cause equalizer limit switch trip. PLC will detect rope spooling error, halt hoist operation, and set brakes.	No effect.	NA	NC
		a. Erroneously sets error bit	PLC will halt hoist operation and set brakes.	No effect.	NA	NC

Table 26. **SWRA - 325 Ton Bridge Crane**

System/Subsystem: 325 Ton Bridge Cranes at the Vehicle Assembly Building High Bays 1/2/3/4
Processor : GE 90-70 **Routine:** F-2281, F-2281A **Subroutine:**
Revision Date: February 1993

Date: May 1999
PMN: H72-1200-01, 02 **Station Set/Facility Code:** 20
Prepared By: B. Kalle, USA 54530

Function	Function Description	a. Logic Failure b. FMN c. Detection Method d. Time to Effect	Failure Effect on System Performance	Failure Effect On System Performance, Vehicle Systems, And/Or Personnel Safety	Correcting Action Remarks	Crit Cat
AF-17 83-85	Detect thermal shut down signal and set error bit	a. Fails to detect shutdown signal	Requires previous failure to cause thermal shutdown condition. Overtemp condition will cause drive to fail. PLC will detect loss of drive, halt hoist operation, and set brakes.	No effect.	NA	NC
		a. Erroneously sets error bit	PLC will halt hoist operation and set brakes.	No effect.	NA	NC
AF-18 86-88	Detect blower overload and set error bit	a. Fails to detect overload	Requires previous failure to cause overload. Loss of blower will cause associated motor to overheat. Overtemp condition will be detected by PLC. PLC will halt hoist operation and set brakes.	No effect.	NA	NC
		a. Erroneously sets error bit	PLC will halt hoist operation and set brakes.	No effect.	NA	NC
TF-1 4-5	Detect masterswitch output greater than 0.5 volts when masterswitch is in the OFF position	a. Fails to detect erroneous voltage	Requires previous failure to cause erroneous voltage. Trolley will accelerate to level determined by voltage level when masterswitch is moved off center.	Possible loss (damage) of a vehicle system due to contact of load to an obstruction if there is inadequate clearance. Operator can halt trolley motion by centering masterswitch, turning off control power, or pressing e-stop.	Proper operation of this error check has been verified by applying a voltage greater than 0.5 volts to the input and confirming that the trolley is disabled and the brakes are set.	C
		a. Erroneously sets error bit	PLC will halt Trolley operation and set brakes	No effect.	NA	NC

Table 26. **SWRA - 325 Ton Bridge Crane**

System/Subsystem: 325 Ton Bridge Cranes at the Vehicle Assembly Building High Bays 1/2/3/4
Processor : GE 90-70 **Routine:** F-2281, F-2281A **Subroutine:**
Revision Date: February 1993

Date: May 1999
PMN: H72-1200-01, 02 **Station Set/Facility Code:** 20
Prepared By: B. Kalle, USA 54530

Function	Function Description	a. Logic Failure b. FMN c. Detection Method d. Time to Effect	Failure Effect on System Performance	Failure Effect On System Performance, Vehicle Systems, And/Or Personnel Safety	Correcting Action Remarks	Crit Cat
TF-2 6-11	Detect DAC output greater than 0.5 volts when Trolley is disabled.	a. Fails to detect erroneous voltage	Requires previous failure to cause erroneous voltage. Trolley will accelerate to level determined by voltage level when masterswitch is moved off center.	Possible loss (damage) of a vehicle system due to contact of load to an obstruction if there is inadequate clearance. Operator can halt trolley motion by centering masterswitch, turning off control power, or pressing e-stop.	Proper operation of this error check has been verified by forcing the Delta Tau controller to output a voltage greater than 0.5 volts and confirming that the trolley is disabled and the brakes are set.	NC
		a. Erroneously sets error bit	PLC will halt Trolley operation and set brakes	No effect.	NA	NC
TF-3 12-13	Detects following error from Delta Tau motion controller and sets error bit	a. Fails to detect following error	Requires previous failure to cause following error.	No effect.	NA	NC
		a. Erroneously sets error bit	PLC will halt Trolley operation and set brakes.	No effect.	NA	NC
TF-4 14-20	Detects overspeed of Trolley for each speed range and sets error bit.	a. Fails to detect overspeed	Requires previous failure to cause overspeed.	No effect.	Overspeed detection is tested during acceptance testing for proper performance.	NC
		a. Erroneously sets error bit	PLC will halt Trolley operation and set brakes.	No effect.	NA	NC

Table 26. **SWRA - 325 Ton Bridge Crane**

System/Subsystem: 325 Ton Bridge Cranes at the Vehicle Assembly Building High Bays 1/2/3/4
Processor : GE 90-70 **Routine:** F-2281, F-2281A **Subroutine:**
Revision Date: February 1993

Date: May 1999
PMN: H72-1200-01, 02 **Station Set/Facility Code:** 20
Prepared By: B. Kalle, USA 54530

Function	Function Description	a. Logic Failure b. FMN c. Detection Method d. Time to Effect	Failure Effect on System Performance	Failure Effect On System Performance, Vehicle Systems, And/Or Personnel Safety	Correcting Action Remarks	Crit Cat
TF-5 21-26	Detects excessive acceleration signal from Delta Tau controller and sets error bit	a. Fails to detect excessive acceleration	Requires previous failure to cause excessive acceleration and failure of drive to limit acceleration.	No effect.	NA	NC
		a. Erroneously sets error bit	PLC will halt Trolley operation and set brakes.	No effect.	NA	NC
TF-6 27-34	Detect Trolley operating in wrong direction and set error bit	a. Fails to detect wrong direction	Requires previous failure to cause Trolley to operate in wrong direction.	Possible loss (damage) of a vehicle system due to contact of load to obstruction if there is inadequate clearance.	Proper operation of this function has been verified during system testing by forcing trolley to operate in the wrong direction and observing that the PLC halts Trolley motion and sets brakes.	C
		a. Erroneously sets error bit	PLC will halt Trolley operation and set brakes.	No effect.	NA	NC
TF-7 35-36	Compares East and West encoders to detect feedback errors	a. Fails to detect encoder loss	Delta Tau motion controller will detect following error or loss of feedback causing PLC to halt Trolley operation and set brakes.	No effect.	NA	NC
		a. Erroneously sets error bit	PLC will halt Trolley operation and set brakes.	No effect.	NA	NC

Table 26. **SWRA - 325 Ton Bridge Crane**

System/Subsystem: 325 Ton Bridge Cranes at the Vehicle Assembly Building High Bays 1/2/3/4
Processor : GE 90-70 **Routine:** F-2281, F-2281A **Subroutine:**
Revision Date: February 1993

Date: May 1999
PMN: H72-1200-01, 02 **Station Set/Facility Code:** 20
Prepared By: B. Kalle, USA 54530

Function	Function Description	a. Logic Failure b. FMN c. Detection Method d. Time to Effect	Failure Effect on System Performance	Failure Effect On System Performance, Vehicle Systems, And/Or Personnel Safety	Correcting Action Remarks	Crit Cat
TF-8 37-41	Compares encoder to tachometer to verify correct encoder operation and sets error bit	a. Fails to detect encoder loss	No effect. TF-7 will detect encoder loss.	No effect.	NA	NC
		a. Erroneously sets error bit	PLC will halt Trolley operation and set brakes.	No effect.	NA	NC
TF-9 42-44 48-50	Detects slow down limit trip and set error bit	a. Fails to detect limit switch trip	No effect. Trolley subroutine will slow Trolley into slow speed range when limit switch is tripped.	No effect.	NA	NC
		a. Erroneously sets error bit	No effect. Bit is used for troubleshooting and does not affect Trolley operation.	No effect.	NA	NC
TF-10 45-47 51-53	Detect final limit switch and set error bit	a. Fails to detect limit switch trip	No effect. Trolley subroutine will stop Trolley motion when final limit is tripped.	No effect.	NA	NC
		a. Erroneously sets error bit	No effect. Bit is used for troubleshooting and does not affect Trolley operation.	No effect.	NA	NC
TF-11 54-56	Detect thermal shut down signal and set error bit.	a. Fails to detect shut down signal	Requires previous failure to cause thermal shutdown condition. Overtemp condition will cause drive to fail. PLC will detect loss of drive, halt hoist operation, and set brakes.	No effect.	NA	NC
		a. Erroneously sets error bit	PLC will halt Trolley operation and set brakes.	No effect.	NA	NC

Table 26. **SWRA - 325 Ton Bridge Crane**

System/Subsystem: 325 Ton Bridge Cranes at the Vehicle Assembly Building High Bays 1/2/3/4
Processor : GE 90-70 **Routine:** F-2281, F-2281A **Subroutine:**
Revision Date: February 1993

Date: May 1999
PMN: H72-1200-01, 02 **Station Set/Facility Code:** 20
Prepared By: B. Kalle, USA 54530

Function	Function Description	a. Logic Failure b. FMN c. Detection Method d. Time to Effect	Failure Effect on System Performance	Failure Effect On System Performance, Vehicle Systems, And/Or Personnel Safety	Correcting Action Remarks	Crit Cat
TF-12 57-59	Detect blower overload and set error bit	a. Fails to detect overload	Requires previous failure to cause overload. Loss of blower will cause associated motor to overheat. Overtemp condition will be detected by PLC. PLC will halt trolley operation and set brakes.	No effect.	NA	NC
		a. Erroneously sets error bit	PLC will halt Trolley operation and set brakes.	No effect.	NA	NC
BF-1 4-9	Detect SCR overtemp condition and set error bit	a. Fails to detect overtemp	Requires previous failure to cause overtemp condition. PLC or Delta Tau controller will detect loss of drive, halt bridge operation, and set brakes.	No effect.	NA	NC
		a. Erroneously sets error bit	PLC will halt Bridge operation and set brakes.	No effect.	NA	NC
BF-2 10-11	Detect masterswitch output greater than 0.5 volts when Masterswitch is in the off position.	a. Fails to detect erroneous voltage	Requires previous failure to cause erroneous voltage. Bridge will accelerate to level determined by voltage level when masterswitch is moved off center.	Possible loss (damage) of a vehicle system due to contact of load to an obstruction if there is inadequate clearance. Operator can halt bridge motion by centering masterswitch, turning off control power, or pressing e-stop.	Proper operation of this error check has been verified by applying a voltage greater than 0.5 volts to the input and confirming that the bridge is disabled and the brakes are set.	C
		a. Erroneously sets error bit	PLC will halt Bridge operation and set brakes.	No effect.	NA	NC

Table 26. **SWRA - 325 Ton Bridge Crane**

System/Subsystem: 325 Ton Bridge Cranes at the Vehicle Assembly Building High Bays 1/2/3/4
Processor : GE 90-70 **Routine:** F-2281, F-2281A **Subroutine:**
Revision Date: February 1993

Date: May 1999
PMN: H72-1200-01, 02 **Station Set/Facility Code:** 20
Prepared By: B. Kalle, USA 54530

Function	Function Description	a. Logic Failure b. FMN c. Detection Method d. Time to Effect	Failure Effect on System Performance	Failure Effect On System Performance, Vehicle Systems, And/Or Personnel Safety	Correcting Action Remarks	Crit Cat
BF-3 12-17	Detect DAC output greater than 0.5 volts when Bridge is disabled	a. Fails to detect erroneous voltage	Requires previous failure to cause erroneous voltage. Bridge will accelerate to level determined by voltage level when masterswitch is moved off center.	Possible loss (damage) of a vehicle system due to contact of load to an obstruction if there is inadequate clearance. Operator can halt bridge motion by centering masterswitch, turning off control power, or pressing e-stop.	Proper operation of this error check has been verified by forcing the Delta Tau controller to output a Voltage greater than 0.5 volts and confirming that the bridge is disabled and the brakes are set.	C
		a. Erroneously sets error bit	PLC will halt Bridge operation and set brakes.	No effect.	NA	NC
BF-4 18-19	Detects following error from Delta Tau motion controller and sets error bit.	a. Fails to detect following error	Requires previous failure to cause following error.	No effect.	NA	NC
		a. Erroneously sets error bit	PLC will halt Bridge operation and set brakes.	No effect.	NA	NC
BF-5 20-25	Detects overspeed of bridge for each speed range and sets error bit.	a. Fails to detect overspeed	Requires previous failures to cause overspeed.	No effect.	Overspeed detection is tested during acceptance testing for proper performance.	NC
		a. Erroneously sets error bit	PLC will halt Bridge operation and set brakes.	No effect.	NA	NC

Table 26. **SWRA - 325 Ton Bridge Crane**

System/Subsystem: 325 Ton Bridge Cranes at the Vehicle Assembly Building High Bays 1/2/3/4
Processor : GE 90-70 **Routine:** F-2281, F-2281A **Subroutine:**
Revision Date: February 1993

Date: May 1999
PMN: H72-1200-01, 02 **Station Set/Facility Code:** 20
Prepared By: B. Kalle, USA 54530

Function	Function Description	a. Logic Failure b. FMN c. Detection Method d. Time to Effect	Failure Effect on System Performance	Failure Effect On System Performance, Vehicle Systems, And/Or Personnel Safety	Correcting Action Remarks	Crit Cat
BF-6 26-32	Detects excessive acceleration signal from Delta Tau controller and sets error bit.	a. Fails to detect excessive acceleration	Requires previous failures to cause excessive acceleration and failure of drive to limit acceleration.	No effect.	NA	NC
		a. Erroneously sets error bit	PLC will halt Bridge operation and set brakes.	No effect.	NA	NC
BF-7 33-40	Detect Bridge operating in wrong direction and set error bit.	a. Fails to detect wrong direction	Requires previous failure to cause Bridge to operate in wrong direction.	Possible loss (damage) of a vehicle system due to contact of load to obstruction if there is inadequate clearance.	Proper operation of this function has been verified during system testing by forcing bridge to operate in the wrong direction and observing that the PLC halts bridge motion and sets brakes.	C
		a. Erroneously sets error bit	PLC will halt Bridge operation and set brakes.	No effect.	NA	NC
BF-8 41-42	Compares NW and SE encoders to detect feedback errors.	a. Fails to detect encoder error	Delta Tau motion controller will detect following error or loss of feedback causing PLC to halt bridge operation and set brakes.	No effect.	NA	NC
		a. Erroneously sets error bit	PLC will halt bridge operation and set brakes.	No effect.	NA	NC
BF-9 43-47	Compares encoder to tachometer to verify correct encoder operation and sets error bit.	a. Fails to detect encoder loss	No effect. BF-8 will detect encoder loss.	No effect.	NA	NC

Table 26. **SWRA - 325 Ton Bridge Crane**

System/Subsystem: 325 Ton Bridge Cranes at the Vehicle Assembly Building High Bays 1/2/3/4
Processor : GE 90-70 **Routine:** F-2281, F-2281A **Subroutine:**
Revision Date: February 1993

Date: May 1999
PMN: H72-1200-01, 02 **Station Set/Facility Code:** 20
Prepared By: B. Kalle, USA 54530

Function	Function Description	a. Logic Failure b. FMN c. Detection Method d. Time to Effect	Failure Effect on System Performance	Failure Effect On System Performance, Vehicle Systems, And/Or Personnel Safety	Correcting Action Remarks	Crit Cat
		a. Erroneously sets error bit	PLC will halt Bridge operation and set brakes.	No effect.	NA	NC
BF-10 48-50 54-56	Detect slow down limit trip and set error bit	a. Fails to detect limit switch trip	No effect. Bridge subroutine will slow bridge into slow speed range when limit switch is tripped.	No effect.	NA	NC
		a. Erroneously sets error bit	No effect. Bit is used for troubleshooting and does not affect bridge operation.	No effect.	NA	NC
BF-11 51-53 57-59	Detect final limit switch and set error bit.	a. Fails to detect limit switch trip	No effect. Bridge subroutine will stop bridge motion when final limit switch is tripped.	No effect.	NA	NC
		a. Erroneously sets error bit	No effect. Bit is used for troubleshooting and does not affect bridge operation.	No effect.	NA	NC
BF-12 60-64	Detect thermal shut down signal and set error bit	a. Fails to detect shutdown signal	Requires previous failure to cause thermal shutdown condition. Overtemp condition will cause drive to fail. PLC will detect loss of drive, halt bridge operation, and set brakes.	No effect.	NA	NC
		a. Erroneously sets error bit	PLC will halt Bridge operation and set brakes.	No effect.	NA	NC
BF-13 65-69	Detect blower overload and set error bit	a. Fails to detect overload	Requires previous failure to cause overload. Loss of blower will cause associated motor to overheat. Overtemp condition will be detected by PLC. PLC will halt Bridge operation and set brakes.	No effect.	NA	NC
		a. Erroneously sets error bit	PLC will halt Bridge operation and set brakes.	No effect.	NA	NC

Appendix A

CRITICAL ITEMS LIST SHEETS

USA Ground Operations CIL Sheet

Critical Item: Programmable Logic Controller (PLC) CPU Module
Criticality Category: 1
NASA Part No: None
Total Quantity: 2
Mfg/Part No: General Electric / IC697CPU781
System: 325 Ton Crane

Find No.	Qty	Area	PMN	Baseline	Drawing / Sheet
Rack 0 Slot 1	1	VAB HB-1,2	H72-1200-01	389.00	EB-2508 / 53
Rack 0 Slot 1	1	VAB HB-3,4	H72-1200-02	389.00	EB-2508 / 53

Function:

Performs all control and monitor functions of the Main and Auxiliary hoists, Bridge, and Trolley.

Failure Mode No. Failure Mode	Failure Cause Failure Effect	Detection Method Time to Effect	Crit Cat
09FY120-001.016 Unsolicited Command	Internal component failure or software failure. PLC could initiate or continue a crane motion in an uncommanded direction or speed.	None 1 Second	1

ACCEPTANCE RATIONALE

Design:

- Designed to industry standards. UL listed.
- Internal diagnostics verify all crane contriols each time the crane is used.
- The PLC is electrically isolated from external voltages / currents.
- Overspeed activated redundant hoist brakes prevent free fall of load.
- The E-stop circuits are hardwired to shunt-trip circuit breakers capable of terminating facility power to the crane.
- The software was written and incorporated by the crane contractor.

Test:

- Crane software was validated and extensivly tested per the acceptance test procedure.
- Before each use, functional test of the hoist, trolley, and bridge will be performed in all axis per OMI Q3521.
- Before each use, functional test of the limit switches and E-stops will be performed in all axis per OMI Q3521.
- Proofload and extensive functional test were performed in accordance with NSS / GO 1740.9 per the acceptance test procedure.
- OMRSD File VI requires the performance of an annual operational test to verify proper operation of all crane controls. The test will cycle the PLC internal diagnostics and show that the crane PLC performes as expected.

Inspection:

- Control cabinet EMI seals are inspected monthly per OMI Q6339.
- Control cabinets and wiring are inspected annually for loose connections, security of mounting, integrity of insulation and general cleanliness per OMI Q6339.

Failure History:

USA Ground Operations CIL Sheet

• Current data on test failures, unexplained anomalies, and other failures experienced during ground processing activities can be found in the PRACA database. The PRACA database was researched. One preventative maintenance Problem Report associated with this component was found but not in the critical failure mode.

Operational Use:

Correcting Action	Timeframe
There is no action which can be taken to mitigate this failure effect.	Since no correcting action is available, timeframe does not apply.

USA Ground Operations CIL Sheet

Critical Item: Drive Motor
Criticality Category: 2
NASA Part No: None
Total Quantity: 4
Mfg/Part No: Gleason Reel / 03254801
System: 325 Ton Crane

Find No.	Qty	Area	PMN	Baseline	Drawing / Sheet
None	2	VAB HB-1,2	H72-1200-01	389.00	032656 / All
None	2	VAB HB-3,4	H72-1200-02	389.00	032656 / All

Function:

Provides torque to raise, hold, and lower Main and Auxiliary Hoist control cables.

Failure Mode No. Failure Mode	Failure Cause Failure Effect	Detection Method Time to Effect	Crit Cat
09FY120-001.013 Motor shaft failure	Catastrophic structual failure. Loss of torque to cable reel. Cable will unwind off cable reel onto load. Possible loss / damage to a vehicle system (TPS).	Visual 1 Second	2

ACCEPTANCE RATIONALE

Design:

• The maximum applied torque is 80% of the maximum allowable rated torque.

Test:

• OMRSD File VI requires annual performance of hoist operational test.

• OMI Q3521, operating instructions, requires all crane systems to be operated briefly in all speeds to verify satisfactory operation before lifting operations.

Inspection:

• OMI Q6339, maintenance instructions, requires the following:

- Semi-annual reapplication of motor bearing lubrication.
- Annual inspection of the collector ring assemblies and electrical components for signs of instrumentation deterioration from heating, chafing, or aging and for dirt or debris build-up within electrical enclosures.

Failure History:

• Current data on test failures, unexplained anomalies, and other failures experienced during ground processing activities can be found in the PRACA database. The PRACA database was researched and no data was found on this component in the critical failure mode.

Operational Use:

Correcting Action	Timeframe
There is no action which can be taken to mitigate the failure effect.	Since no correcting action is available, timeframe does not apply.

USA Ground Operations CIL Sheet

Critical Item: Gear Reducer
Criticality Category: 2
NASA Part No: None
Total Quantity: 4
Mfg/Part No: Gleason Reel / 02978604
System: 325 Ton Crane

Find No.	Qty	Area	PMN	Baseline	Drawing / Sheet
None	2	VAB HB-1,2	H72-1200-01	389.00	032656 / All
None	2	VAB HB-3,4	H72-1200-02	389.00	032656 / All

Function:

Transmits torque from the Cable Reel Drive Motor to the Electrical Control Cable Spool.

Failure Mode No. Failure Mode	Failure Cause Failure Effect	Detection Method Time to Effect	Crit Cat
09FY120-001.014 Gear reducer failure	Structual failure of gears, shafts, or case. Loss of torque to cable reel. Cable will unwind off cable reel onto load. Possible loss / damage to a vehicle system (TPS).	Visual 1 Second	2

ACCEPTANCE RATIONALE

Design:

- Nord worm gear reducer, 143.97 to 1 gear ratio.
- The design is based on industry standards.
- The maximum applied torque is 80% of the maximum allowable rated torque.

Test:

- OMRSD File VI requires annual performance of hoist operational test.
- OMI Q3521, operating instructions, requires all crane systems to be operated briefly in all speeds to verify satisfactory operation before lifting operations.

Inspection:

- OMI Q6339, maintenance instructions, requires the following:

- Semi-annual inspection for general condition of the cable reels.
- Annual oil sampling and analysis of the main and auxiliary cable reel gear reducers.

Failure History:

- Current data on test failures, unexplained anomalies, and other failures experienced during ground processing activities can be found in the PRACA database. The PRACA database was researched and no data was found on this component in the critical failure mode.

Operational Use:

Correcting Action	Timeframe
There is no action which can be taken to mitigate the failure effect.	Since no correcting action is available, timeframe does not apply.

USA Ground Operations CIL Sheet

Critical Item: Coupling
NASA Part No: None
Mfg/Part No: Gleason Reel / None
System: 325 Ton Crane

Criticality Category: 2
Total Quantity: 4

Find No.	Qty	Area	PMN	Baseline	Drawing / Sheet
None	2	VAB HB-1,2	H72-1200-01	389.00	032656 / All
None	2	VAB HB-3,4	H72-1200-02	389.00	032656 / All

Function:

Transmits torque from the Cable Reel Drive Motor to the Gear Reducer and Electrical Control Cable Spool.

Failure Mode No. Failure Mode	Failure Cause Failure Effect	Detection Method Time to Effect	Crit Cat
09FY120-001.015 Coupling failure	Catastrophic structual failure. Loss of torque to cable reel. Cable will unwind off cable reel onto load. Possible loss / damage to a vehicle system (TPS).	Visual 1 Second	2

ACCEPTANCE RATIONALE

Design:

- The design is based on industry standards.
- The maximum applied torque is 80% of the maximum allowable rated torque.

Test:

- OMRSD File VI requires annual performance of hoist operational test.
- OMI Q3521, operating instructions, requires all crane systems to be operated briefly in all speeds to verify satisfactory operation before lifting operations.

Inspection:

- OMI Q6339, maintenance instructions, requires semi-annual inspection for general condition of the cable reels.

Failure History:

- Current data on test failures, unexplained anomalies, and other failures experienced during ground processing activities can be found in the PRACA database. The PRACA database was researched and no data was found on this component in the critical failure mode.

Operational Use:

Correcting Action	Timeframe
There is no action which can be taken to mitigate the failure effect.	Since no correcting action is available, timeframe does not apply.

USA Ground Operations 1R Non-CIL Sheet

1R Non-CIL Item: Main Hoist Gear Reducer
Criticality Category: 1R
NASA Part No: None
Total Quantity: 4
Mfg/Part No: Foote-Jones / 2002HLE
System: 325 Ton Crane

Find No.	Qty	Area	PMN	Baseline	Drawing / Sheet
1	2	VAB HB-1,2	H72-1200-01	389.00	A-14878 / ALL
1	2	VAB HB-3,4	H72-1200-02	389.00	A-14878 / ALL

Function:

Transmitts torque from DC electric motor and electric brakes to pinion gear coupling.

Failure Mode No. Failure Mode	Failure Cause Failure Effect	Detection Method Time to Effect	Crit Cat
09FY120-001.001 Gear disengages	Structual failure Loss of ability for associated motor to control load and for associated brake to hold load. Opposite load path will maintain control of the load. Computer controller will detect load imbalance and disable hoist. Requires failure in opposite load path to loose control of the Load. Could cause loss of life and/or vehicle	Visual Immediate	1R

ACCEPTANCE RATIONALE

Redundancy Screens:		**Pass/Fail**
A	Item is verifiable during normal ground operations	Pass
B	Item loss is readily detectable by the ground crew	Pass
C	Loss of all redundant items cannot result from a single cause	Pass

Conforms to NSTS 08080-1: N/A

Test and Inspection:

OMRS File VI requires annual performance of an operational test on both east and west load paths to provide assurance that each path will independently hold the rated load.

Operational Use:

USA Ground Operations 1R Non-CIL Sheet

1R Non-CIL Item: Main Hoist Pinion Gear Coupling **Criticality Category:** 1R
NASA Part No: None **Total Quantity:** 4
Mfg/Part No: Ederer / KOP-FLEX 7HM
System: 325 Ton Crane

Find No.	Qty	Area	PMN	Baseline	Drawing / Sheet
2	2	VAB HB-1,2	H72-1200-01	389.00	A-14878 / ALL
2	2	VAB HB-3,4	H72-1200-02	389.00	A-14878 / ALL

Function:

Transmits torque from Main and Auxiliary Hoist gear reducer output shaft to pinion gear.

Failure Mode No. Failure Mode	Failure Cause Failure Effect	Detection Method Time to Effect	Crit Cat
09FY120-001.002 Key disengages	Structual failure Loss of ability for associated motor to control load and for associated brake to hold load. Opposite load path will maintain control of the load. Computer controller will detect load imbalance and disable hoist. Requires failure in opposite load path to loose control of the Load. Could cause loss of life and/or vehicle.	Visual Immediate	1R

ACCEPTANCE RATIONALE

Redundancy Screens: **Pass/Fail**

A	Item is verifiable during normal ground operations	Pass
B	Item loss is readily detectable by the ground crew	Pass
C	Loss of all redundant items cannot result from a single cause	Pass

Conforms to NSTS 08080-1: N/A

Test and Inspection:

OMRS File VI requires annual performance of an operational test on both east and west load paths to provide assurance that each path will independently hold the rated load.

Operational Use:

USA Ground Operations 1R Non-CIL Sheet

1R Non-CIL Item: Main Hoist Brake Wheel
Criticality Category: 1R
NASA Part No: None
Total Quantity: 4
Mfg/Part No: Ederer / C-24289
System: 325 Ton Crane

Find No.	Qty	Area	PMN	Baseline	Drawing / Sheet
6	2	VAB HB-1,2	H72-1200-01	389.00	A-14878 / ALL
6	2	VAB HB-3,4	H72-1200-02	389.00	A-14878 / ALL

Function:

Provides torque to hold load when hoist drive is de-energized.

Failure Mode No. Failure Mode	Failure Cause Failure Effect	Detection Method Time to Effect	Crit Cat
09FY120-001.003 Key disengages	Structural Failure Loss of ability for brake to hold load. Opposite load path will maintain control of the load. Computer controller will detect tachometer or load imbalance when opposite drive takes up backlash and torsional deflection. Computer controller will disable hoist. Requires failure in opposite load path to loose control of the Load. Could cause loss of life and/or vehicle.	Visual Immediate	1R

ACCEPTANCE RATIONALE

Redundancy Screens:		**Pass/Fail**
A	Item is verifiable during normal ground operations	Pass
B	Item loss is readily detectable by the ground crew	Pass
C	Loss of all redundant items cannot result from a single cause	Pass

Conforms to NSTS 08080-1: N/A

Test and Inspection:

OMRS File VI requires annual performance of an operational test on both east and west load paths to provide assurance that each path will independently hold the rated load.

Operational Use:

USA Ground Operations 1R Non-CIL Sheet

1R Non-CIL Item: Main Hoist Electric Brake
Criticality Category: 1R
NASA Part No: None
Total Quantity: 4
Mfg/Part No: General Electric / DS9528A105
System: 325 Ton Crane

Find No.	Qty	Area	PMN	Baseline	Drawing / Sheet
None	2	VAB HB-1,2	H72-1200-01	389.00	A-14878 / All
None	2	VAB HB-3,4	H72-1200-02	389.00	A-14878 / All

Function:

Provides torque to hold load when hoist drive is de-energized.

Failure Mode No. Failure Mode	Failure Cause Failure Effect	Detection Method Time to Effect	Crit Cat
09FY120-001.004 Fails to set	Stuck mechanism, worn or glazes shoes Loss of ability for brake to hold load. Opposite load path will maintain control of the load. Computer controller will detect tachometer or load imbalance when opposite drive takes up backlash and torsional deflection. Computer controller will disable hoist. Requires failure in opposite load path to loose control of the Load. Could cause loss of life and/or vehicle.	Visual Immediate	1R

ACCEPTANCE RATIONALE

Redundancy Screens:		**Pass/Fail**
A	Item is verifiable during normal ground operations	Pass
B	Item loss is readily detectable by the ground crew	Pass
C	Loss of all redundant items cannot result from a single cause	Pass

Conforms to NSTS 08080-1: N/A

Test and Inspection:

OMRS File VI requires annual performance of an operational test on both east and west load paths to provide assurance that each path will independently hold the rated load.

Operational Use:

USA Ground Operations 1R Non-CIL Sheet

1R Non-CIL Item: Main Hoist Pinion Gear
Criticality Category: 1R
NASA Part No: None
Total Quantity: 4
Mfg/Part No: Ederer / C-24632
System: 325 Ton Crane

Find No.	Qty	Area	PMN	Baseline	Drawing / Sheet
10	2	VAB HB-1,2	H72-1200-01	389.00	A-14878 / All
10	2	VAB HB-3,4	H72-1200-02	389.00	A-14878 / All

Function:

Transmits torque from hoist gear reducer to hoist wire rope drum.

Failure Mode No. Failure Mode	Failure Cause Failure Effect	Detection Method Time to Effect	Crit Cat
09FY120-001.005 Gear Disengages	Structural Failure Loss of ability for associated motor to control load and for associated brake to hold load. Opposite load path will maintain control of the load. Computer controller will detect load imbalance and disable hoist. Requires failure in opposite load path to loose control of the Load. Could cause loss of life and/or vehicle.	Visual Immediate	1R

ACCEPTANCE RATIONALE

Redundancy Screens:		**Pass/Fail**
A	Item is verifiable during normal ground operations	Pass
B	Item loss is readily detectable by the ground crew	Pass
C	Loss of all redundant items cannot result from a single cause	Pass

Conforms to NSTS 08080-1: N/A

Test and Inspection:

OMRS File VI requires annual performance of an operational test on both east and west load paths to provide assurance that each path will independently hold the rated load.

Operational Use:

USA Ground Operations 1R Non-CIL Sheet

1R Non-CIL Item: Main Hoist Drum Gear
Criticality Category: 1R
NASA Part No: None
Total Quantity: 4
Mfg/Part No: Ederer / C-24203
System: 325 Ton Crane

Find No.	Qty	Area	PMN	Baseline	Drawing / Sheet
11	2	VAB HB-1,2	H72-1200-01	389.00	A-14878 / All
11	2	VAB HB-3,4	H72-1200-02	389.00	A-14878 / All

Function:

Transmits torque from hoist gear reducer to hoist wire rope drum.

Failure Mode No. Failure Mode	Failure Cause Failure Effect	Detection Method Time to Effect	Crit Cat
09FY120-001.006 Gear Disengages	Structural Failure Loss of ability for associated motor to control load and for associated brake to hold load. Opposite load path will maintain control of the load. Computer controller will detect load imbalance and disable hoist. Requires failure in opposite load path to loose control of the Load. Could cause loss of life and/or vehicle.	Visual Immediate	1R

ACCEPTANCE RATIONALE

Redundancy Screens:		**Pass/Fail**
A	Item is verifiable during normal ground operations	Pass
B	Item loss is readily detectable by the ground crew	Pass
C	Loss of all redundant items cannot result from a single cause	Pass

Conforms to NSTS 08080-1: N/A

Test and Inspection:

OMRS File VI requires annual performance of an operational test on both east and west load paths to provide assurance that each path will independently hold the rated load.

Operational Use:

USA Ground Operations 1R Non-CIL Sheet

1R Non-CIL Item: Auxiliary Hoist Gear Reducer
Criticality Category: 1R
NASA Part No: None
Total Quantity: 4
Mfg/Part No: Foote-Jones / 1202HLE
System: 325 Ton Crane

Find No.	Qty	Area	PMN	Baseline	Drawing / Sheet
1	2	VAB HB-1,2	H72-1200-01	389.00	A-14877 / All
1	2	VAB HB-3,4	H72-1200-02	389.00	A-14877 / All

Function:

Transmits torque from DC electric motor and electric brake to pinion gear coupling.

Failure Mode No. Failure Mode	Failure Cause Failure Effect	Detection Method Time to Effect	Crit Cat
09FY120-001.007 Gear Disengages	Structural Failure Loss of ability for associated motor to control load and for associated brake to hold load. Opposite load path will maintain control of the load. Computer controller will detect load imbalance and disable hoist. Requires failure in opposite load path to loose control of the load. Could cause loss of life and/or vehicle.	Visual Immediate	1R

ACCEPTANCE RATIONALE

Redundancy Screens: **Pass/Fail**

- **A** Item is verifiable during normal ground operations — Pass
- **B** Item loss is readily detectable by the ground crew — Pass
- **C** Loss of all redundant items cannot result from a single cause — Pass

Conforms to NSTS 08080-1: N/A

Test and Inspection:

OMRS File VI requires annual performance of an operational test on both east and west load paths to provide assurance that each path will independently hold the rated load.

Operational Use:

USA Ground Operations 1R Non-CIL Sheet

1R Non-CIL Item: Auxiliary Hoist Pinion Gear Coupling **Criticality Category:** 1R
NASA Part No: None **Total Quantity:** 4
Mfg/Part No: Ederer / KOP-FLEX 4½ HM
System: 325 Ton Crane

Find No.	Qty	Area	PMN	Baseline	Drawing / Sheet
2	2	VAB HB-1,2	H72-1200-01	389.00	A-14877 / All
2	2	VAB HB-3,4	H72-1200-02	389.00	A-14877 / All

Function:

Transmits torque from hoist gear reducer output shaft to drum gear

Failure Mode No. Failure Mode	Failure Cause Failure Effect	Detection Method Time to Effect	Crit Cat
09FY120-001.008 Key Disengages	Structural Failure Loss of ability for associated motor to control load and for associated brake to hold load. Opposite load path will maintain control of the load. Computer controller will detect load imbalance or following error and disable hoist. Requires failure in opposite load path to loose control of the load. Could cause loss of life and/or vehicle.	Visual Immediate	1R

ACCEPTANCE RATIONALE

Redundancy Screens:		**Pass/Fail**
A	Item is verifiable during normal ground operations	Pass
B	Item loss is readily detectable by the ground crew	Pass
C	Loss of all redundant items cannot result from a single cause	Pass

Conforms to NSTS 08080-1: N/A

Test and Inspection:

OMRS File VI requires annual performance of an operational test on both east and west load paths to provide assurance that each path will independently hold the rated load.

Operational Use:

USA Ground Operations 1R Non-CIL Sheet

1R Non-CIL Item: Auxiliary Hoist Brake Wheel **Criticality Category:** 1R
NASA Part No: None **Total Quantity:** 4
Mfg/Part No: Ederer / C-24290
System: 325 Ton Crane

Find No.	Qty	Area	PMN	Baseline	Drawing / Sheet
6	2	VAB HB-1,2	H72-1200-01	389.00	A-14877 / All
6	2	VAB HB-3,4	H72-1200-02	389.00	A-14877 / All

Function:

Provides torque to hold load when hoist drive is de-energized.

Failure Mode No. Failure Mode	Failure Cause Failure Effect	Detection Method Time to Effect	Crit Cat
09FY120-001.009 Key Disengages	Structural Failure Loss of ability for brake to hold load. Opposite load path will maintain control of the load. Computer controller will detect encoder error or load imbalance when opposite drive takes up backlash and torsional deflection. Computer controller will disable hoist. Requires failure in opposite load path to loose control of the load. Could cause loss of life and/or vehicle.	Visual Immediate	1R

ACCEPTANCE RATIONALE

Redundancy Screens:		**Pass/Fail**
A	Item is verifiable during normal ground operations	Pass
B	Item loss is readily detectable by the ground crew	Pass
C	Loss of all redundant items cannot result from a single cause	Pass

Conforms to NSTS 08080-1: N/A

Test and Inspection:

OMRS File VI requires annual performance of an operational test on both east and west load paths to provide assurance that each path will independently hold the rated load.

Operational Use:

USA Ground Operations 1R Non-CIL Sheet

1R Non-CIL Item: Auxiliary Hoist Electric Brake
Criticality Category: 1R
NASA Part No: None
Total Quantity: 4
Mfg/Part No: General Electric / DS9528A103
System: 325 Ton Crane

Find No.	Qty	Area	PMN	Baseline	Drawing / Sheet
None	2	VAB HB-1,2	H72-1200-01	389.00	A-14877 / All
None	2	VAB HB-3,4	H72-1200-02	389.00	A-14877 / All

Function:

Provides torque to hold load when hoist drive is de-energized.

Failure Mode No. Failure Mode	Failure Cause Failure Effect	Detection Method Time to Effect	Crit Cat
09FY120-001.010 Fails to set	Stuck mechanism, worn or glazed shoes Loss of ability for brake to hold load. Opposite load path will maintain control of the load. Computer controller will detect encoder error or load imbalance when opposite drive takes up backlash and torsional deflection. Computer controller will disable hoist. Requires failure in opposite load path to loose control of the load. Could cause loss of life and/or vehicle.	Visual Immediate	1R

ACCEPTANCE RATIONALE

Redundancy Screens:		**Pass/Fail**
A	Item is verifiable during normal ground operations	Pass
B	Item loss is readily detectable by the ground crew	Pass
C	Loss of all redundant items cannot result from a single cause	Pass

Conforms to NSTS 08080-1: N/A

Test and Inspection:

OMRS File VI requires annual performance of an operational test on both east and west load paths to provide assurance that each path will independently hold the rated load.

Operational Use:

USA Ground Operations 1R Non-CIL Sheet

1R Non-CIL Item: Auxiliary Hoist Pinion Gear
Criticality Category: 1R
NASA Part No: None
Total Quantity: 4
Mfg/Part No: Ederer / C-24613
System: 325 Ton Crane

Find No.	Qty	Area	PMN	Baseline	Drawing / Sheet
9	2	VAB HB-1,2	H72-1200-01	389.00	A-14878 / All
9	2	VAB HB-3,4	H72-1200-02	389.00	A-14878 / All

Function:

Transmits torque from hoist gear reducer to drum gear.

Failure Mode No. Failure Mode	Failure Cause Failure Effect	Detection Method Time to Effect	Crit Cat
09FY120-001.011 Gear Disengages	Structural Failure Loss of ability for associated motor to control load and for associated brake to hold load. Opposite load path will maintain control of the load. Computer controller will detect load imbalance or encoder error and disable hoist. Requires failure in opposite load path to loose control of the load. Could cause loss of life and/or vehicle.	Visual Immediate	1R

ACCEPTANCE RATIONALE

Redundancy Screens:		**Pass/Fail**
A	Item is verifiable during normal ground operations	Pass
B	Item loss is readily detectable by the ground crew	Pass
C	Loss of all redundant items cannot result from a single cause	Pass

Conforms to NSTS 08080-1: N/A

Test and Inspection:

OMRS File VI requires annual performance of an operational test on both east and west load paths to provide assurance that each path will independently hold the rated load.

Operational Use:

USA Ground Operations 1R Non-CIL Sheet

1R Non-CIL Item: Auxiliary Hoist Drum Gear
Criticality Category: 1R
NASA Part No: None
Total Quantity: 4
Mfg/Part No: Ederer / C-24204
System: 325 Ton Crane

Find No.	Qty	Area	PMN	Baseline	Drawing / Sheet
13	2	VAB HB-1,2	H72-1200-01	389.00	A-14878 / All
13	2	VAB HB-3,4	H72-1200-02	389.00	A-14878 / All

Function:

Transmits torque from hoist gear reducer to hoist wire rope drum.

Failure Mode No. Failure Mode	Failure Cause Failure Effect	Detection Method Time to Effect	Crit Cat
09FY120-001.012 Gear Disengages	Structural Failure Loss of ability for associated motor to control load and for associated brake to hold load. Opposite load path will maintain control of the load. Computer controller will detect load imbalance or encoder error and disable hoist. Requires failure in opposite load path to loose control of the load. Could cause loss of life and/or vehicle.	Visual Immediate	1R

ACCEPTANCE RATIONALE

Redundancy Screens:		**Pass/Fail**
A	Item is verifiable during normal ground operations	Pass
B	Item loss is readily detectable by the ground crew	Pass
C	Loss of all redundant items cannot result from a single cause	Pass

Conforms to NSTS 08080-1: N/A

Test and Inspection:

OMRS File VI requires annual performance of an operational test on both east and west load paths to provide assurance that each path will independently hold the rated load.

Operational Use:

Appendix B

HAZARD REPORTS

Hazard # : **LL-0002** Revision : **B** Revision Date : **09/27/99**
Master # : **K-SPC-00396-S-CR** Date Identified : **02/08/89** Team / Log : **LL / 2**

Title : **FLIGHT HARDWARE DAMAGE/LOSS AND/OR PERSONNEL INJURY/DEATH DUE TO VAB 325/250/175-TON CRANE OR LIFTING GSE FAILURE**

CONFIGURATION DATA

Responsible Organization : **SFOC GO**
Mission Effectivity : **30+**
CR : **S050414AD**
Mission Phase : **GROUND PROCESSING**
Location/Station Sets : **20**
Baselines : **246.00, 266.02, 299.48, 389.00, 700.21, 710.14, 710.15**

Program Model Numbers : **H70-0597, H72-0828-11, H72-1200-01, H72-1200-02, H72-1245-01, H72-1245-02, H77-0384-02, H77-0384-03, H77-0384-03A, H78-3004, H78-3006, K60-0528, K60-0533, K60-0534**

Flow Segments : **VABM, VABO, VABS, VABT**

HAZARDS ANALYSIS DATA

Report Status : **CLOSED**
Closure Class : **ACCEPTED RISK**

Worst Case Cause : **1A,1B,1C**
Severity : **CATASTROPHIC**
Likelihood : **REMOTE**

Hazard Type : **SHUTTLE**

Prepared By : **USA**
Mail Code : **USK-291**

Analysis Type : **OPERATING & SUPPORT**

RISK MATRIX

Hazard severity and likelihood of occurrence with controls in place
(see associated cause #)

LIKELIHOOD	MARGINAL	CRITICAL	CATASTR.
PROBABLE			
INFREQUENT			
REMOTE			1A, 1B, 1C
IMPROBABLE			2A, 2B, 2C, 2D, 2E

SEVERITY LEVELS

- CONTROLLED
- ACCEPTED RISK
- UNACCEPTABLE

APPROVALS :		DATE :	DATE APPROVED :	
Safety Engineer :	**Judy Gari**	**11/12/99**	CCB :	**12/16/99**
Contractor System / Design Engineer :	**S. F. Koca**	**12/10/99**	SSRP :	**01/19/00**
Contractor Safety Manager (1) :	**Lisa R. Waters**	**11/24/99**	PRCB :	**03/01/00**
Contractor Safety Manager (2) :	**Jack W. Barnette**	**12/01/99**		
NASA System Engineer :	**Larry Jones**	**12/14/99**		
NASA Safety Manager (1) :	**Ron Long**	**11/30/99**		
NASA Safety Manager (2) :	**Daryl L. Frank**	**11/30/99**		

Hazard # :	**LL-0002**	Revision :	**B**	Revision Date :	**09/27/99**
Master # :	**K-SPC-00396-S-CR**	Date Identified :	**02/08/89**	Team / Log :	**LL / 2**

HAZARD DESCRIPTION :

Two 325-Ton VAB cranes, two 250-Ton VAB cranes and a 175-Ton VAB crane are utilized to perform major VAB lifting operations (e.g., SRB Stacking, ET/SRB Mate, and Orbiter/ET Mate). These cranes are electric bridge cranes with main hook load capacities of 325 tons, 250 tons, and 175 tons, respectively, and an auxiliary hook load capacity of 50 tons and 25 tons respectively. Both 325-Ton and 250-Ton cranes operate on crane rails 466 feet above the VAB floor. One crane runs between High Bays 1 and 2, with the second crane running between High Bays 3 and 4. The 175-Ton crane is operated on crane rails 168 feet above the VAB floor. The 175-Ton crane runs along the length of the VAB transfer aisle. Crane motions are controlled from the console in the crane operator's cab (located under one bridge truss). The four major crane control capabilities are: a) hoisting and lowering the main and auxiliary load hooks; b) transverse movement of the trolley across the bridge; c) transverse movement of the crane along the runway rails; and d) main hook swiveling and 325-Ton auxiliary hoist swiveling.

The 250-Ton and 175-Ton crane operator's cab is equipped with four lever-operated master switches. These switches control movements of the main and auxiliary hoist load blocks, and trolley and bridge travel. Each master switch lever is provided with a squeeze-type lever at the side. The function of the lever for hoist motions is to allow for adequate current to hold the load before the hoist brakes are released. For bridge and trolley motions, the lever is to let the crane coast to a stop to reduce load swing. The master switches are equipped with center return springs. The master switches are stepless. Motor speed, which is controlled by the master switch and from the fine/course speed range selector switch, is proportional to the displacement or movement of the switch lever from the neutral position. Full displacement will produce maximum motor speed. There are no detents or steps. Master switches are arranged on the cab console so that the crane will move in the direction in which the lever is pushed.

The 250-Ton and 175-Ton main hoist, auxiliary hoist, trolley and bridge utilize motor-generator sets that supply energy to the DC final drive motors. The DC drive system provides for floating the load, very slow speeds for setting or starting the load, rapid hoisting and lowering of an empty hook, regenerative braking, and very precise and smooth control of crane movements.

The 325-Ton crane operator's cab is equipped with a crane control panel and radio communications. The control panel has two primary operator stations, one for lateral movements and the other for vertical movements. Each station has selector switches, indication lights, master switches, control potentiometers and computer generated position displays. The hoist control station has an additional computer interface panel for automated crane functions. The hoist drive system uses a dual motor controller configuration where both controllers are used during normal operation. Each controller operates independently and runs one main hoist motor. The hoist electronic drives are variable speed DC drives with each speed range being fully controllable from minimum to maximum speed, proportional to the control lever position.

The 325-Ton main hoist, auxiliary hoist, trolley and bridge drives are redundant configurations utilizing solid state drives that supply energy to the DC final drive motors. The DC drive system provides for floating the load, very slow speeds for setting or starting the load, rapid hoisting and lowering of an empty hook, regenerative braking and very precise and smooth control of crane movements.

The specific VAB crane(s) and lifting hardware/GSE utilized for major VAB crane lifting operations are:

A. SRB Stacking (OMI B5303) is accomplished using the 325/250-Ton crane, the SRM Four-Point Lifting Beam System H77-0384-02, H77-0384-03/03A and the 250-Ton Hydraset (H72-0828-11).

B. ET/SRB Mate (OMI S0003) uses both the 325/250-Ton and 175-Ton cranes, and the ET Forward Sling Set (H78-3006).

C. Orbiter/ET Mate (OMI S0004) uses both the 325/250-Ton and 175-Ton cranes, and the Orbiter Mating Sling Set (H70-0597) with Load Indicator Links (H72-1245-01 and H72-1245-02).

D. ET Move from transporter to checkout cell (OMI T5002) uses both the 325/250-Ton and 175-Ton cranes, the ET Forward Sling Set (H78-3006) and the ET Aft Sling Set (H78-3004).

During critical VAB crane lifting/mating operations, the potential exists for flight hardware damage and/or personnel injury/death due to 325/250/175-Ton crane or lifting GSE failures that cause the load to fall or move horizontally at a speed faster than commanded.

HAZARD CAUSE:

Hazard # :	**LL-0002**	Revision :	**B**	Revision Date :	**09/27/99**
Master # :	**K-SPC-00396-S-CR**	Date Identified :	**02/08/89**	Team / Log :	**LL / 2**

1. Failure of VAB cranes critical items (Criticality 1 and 2) during lifting operations. Critical items are identified under the FMEA/CIL REFERENCES section of this hazard report.
1A. (ACCEPTED RISK/CATASTROPHIC/REMOTE) - 175 Ton VAB Crane.
1B. (ACCEPTED RISK/CATASTROPHIC/REMOTE) - 250 Ton VAB Cranes.
1C. (ACCEPTED RISK/CATASTROPHIC/REMOTE) - 325 Ton VAB Cranes.

2. Failure of the lifting hardware/GSE used during 325/250/175-Ton VAB crane lifting operations:
2A. (CONTROLLED/CATASTROPHIC/IMPROBABLE) - SRM Four-Point Lifting Beam System (H77-0384-03).
2B. (CONTROLLED/CATASTROPHIC/IMPROBABLE) - 250-Ton Hydraset (H72-0828-11).
2C. (CONTROLLED/CATASTROPHIC/IMPROBABLE) - ET Forward Sling Set (H78-3006).
2D. (CONTROLLED/CATASTROPHIC/IMPROBABLE) - Orbiter Mating Sling Set (H70-0597) and Links (H72-1245-01/H72-245-02).
2E. (CONTROLLED/CATASTROPHIC/IMPROBABLE) - ET Aft Sling Set (H78-3004).

HAZARD EFFECTS :

1.A., 1.B., 1.C. Failures associated with the 325/250/175-Ton Crane critical items could result in damage/loss of flight hardware (SRB segment, ET, Orbiter)/GSE and/or personnel injury/death.

2.A., 2.B., 2.C., 2.D., 2.E. Failures associated with the lifting hardware could result in damage/loss of flight hardware (SRB segment, ET, Orbiter)/GSE and/or personnel injury/death (loss of the VAB facility due to inadvertent ignition of an SRM segment is addressed in KSC Hazard Report LL-0005).

ENGINEERING / SAFETY REQUIREMENTS :

NSTS 07700, Volume X, Paragraph 3.5.1.2.1.1, GSE Fail Safe Requirement
OSHA, 29 CFR 1910.179(n)(3)(vi), Overhead and Gantry Cranes
ANSI B31.2-1990, 2-3.2.3(e), Overhead and Gantry Cranes
GSOP 5400, 2.36, Suspended Loads
NSS/GO 1740.9, NASA Safety Standard for Lifting Devices and Equipment
KHB 1710.2 KSC Safety Practices Handbook, Annex G - KSC Supplement to NSS/GO 1740

OMRSD REQUIREMENTS :

File VI, B/L 389.00, GTAFCRVD0.002, 175-Ton Bridge Crane Brake Test
File VI, B/L 389.00, GTAFCRVD0.026, 175-Ton Bridge Crane Ops Test
File VI, B/L 389.00, GTAFCRVD0.027, 175-Ton Bridge Crane Ammeter S/O Point
File VI, B/L 389.00, GVBFCRVC0.002, 250-Ton Bridge Crane No. 1 Brake Test
File VI, B/L 389.00, GVBFCRVC0.026, 250-Ton Bridge Crane No. 1 Ops Test
File VI, B/L 389.00, GVBFCRVC0.027, 250-Ton Bridge Crane No. 1 S/O Point
File VI, B/L 389.00, GVBFCRVC0.028, 250/25 Ton Aux Crane No. 1 Ops Test
File VI, B/L 389.00, GVBFCRVC0.029, 250 Ton Crane No.1 Bridge & T Ops Test
File VI, B/L 389.00, GVDFCRVC0.002, 250-Ton Bridge Crane No. 2 Brake Test
File VI, B/L 389.00, GVDFCRVC0.026, 250-Ton Bridge Crane No. 2 Ops Test
File VI, B/L 389.00, GVDFCRVC0.027, 250-Ton Bridge Crane No. 2 S/O Point
File VI, B/L 389.00, GVDFCRVC0.028, 250/25 Ton Aux Crane No. 2 Ops Test
File VI, B/L 389.00, GVDFCRVC0.029, 250 Ton Crane No.2 Bridge & T Ops Test
File VI, B/L 246B, G20GHANM0.001, 250-Ton Hydraset Load Test Verification
File VI, B/L 246B, G20GHANM0.011, 250-Ton Hydraset Operational Test
File VI, B/L 389.00, G20FCRVC4.001, 325-Ton #1 Main Hoist Operational Test
File VI, B/L 389.00, G20FCRVC4.002, 325/50-Ton #1 Aux Hoist Operational Test
File VI, B/L 389.00, G20FCRVC5.001, 325-Ton #2 Main Hoist Operational Test
File VI, B/L 389.00, G20FCRVC5.002, 325/50- Ton #2 Aux Hoist Operational Test
File VI, B/L 299.48B, G20BHAHYC.001, Periodic Load Test
File VI, B/L 299.48B, G20BHAHYC.002, Critical Weld Inspection
File VI, B/L 299.48B, G20BHAHYC.009, Load Pin and Console Certification
File VI, B/L 299.48B, G20BHAHYE.001, Periodic Load Test
File VI, B/L 299.48B, G20BHAHYE.002, Critical Weld Inspection
File VI, B/L 299.48B, G20BHAHYE.009, Load Pin and Console Certification
File VI, B/L 710.15, G33THACC0.003, Periodic Load Test
File VI, B/L 700.21, G99VHAME2.004, Torque Requirement

Hazard # :	**LL-0002**	Revision :	**B**	Revision Date :	**09/27/99**
Master # :	**K-SPC-00396-S-CR**	Date Identified :	**02/08/89**	Team / Log :	**LL / 2**

File VI, B/L 700.21, G99VHAME2.007, NDT Verification Requirement
File VI, B/L 299.48B, G99BHAHYB.001, Periodic Load Test
File VI, B/L 299.48B, G99BHAHYB.002, Critical Weld Inspection
File VI, B/L 299.48B, G99BHAHYB.009, Load Pin and Console Certification

LAUNCH COMMIT CRITERIA :

None.

DETAILED ELIMINATION / CONTROL / ACCEPTED RISK RATIONALE :

The risk of hazard occurrence is reduced to an acceptable level based on the following controls:

1A, 1B, 1C. The 325/250/175-Ton cranes have appropriate design safety factors and meet industry standards as a minimum. The 325/250/175-Ton cranes are in compliance with all NSS/GO-1740.9B (NASA Safety Standard for Lifting Devices and Equipment) design requirements except for the 250/175-Ton cranes which have only one upper limit switch and no hook safety latch. These non-compliances were accepted by the Launch and Landing Level III Configuration Control/SPC Risk Review Board on 18 December 1990. The 250/175-Ton crane motor-generator set is equipped with automatic overspeed protection, which is engaged during critical lifting operations. OMI Q6003 and Q6339 perform extensive monthly, quarterly, semi-annual, annual, and biennial preventive maintenance and testing of the 325/250/175-Ton cranes to ensure readiness to support lifting operations. Preventive maintenance includes visual checks of crane components for damage or excessive wear, adjustments, lubrication, cleaning, repairs and/or parts replacement, and system operation under no-load and 100% load conditions. OMRSD File VI requires bridge crane brake tests, operational tests, and ammeter Switch Over point (See OMRSD File VI Requirements Listed).

The 325/250/175-Ton cranes are load-tested annually. Prior to lifting operations, OMI Q3521 and Q3008 perform crane pre-operational checks/activities, including: a) crane status check; b) visual crane inspection; c) establishment of a 25-foot control area; d) crane inspections from the bridge and trolley catwalks; e) establishment of operator communications; f) upper limit switch testing; g) 250/175-Ton motor generator and current limit checks, and h) 325-Ton self diagnostic checks.

OMI's Q6339 and Q6003 require semi-annual inspection as well as an annual inspection of all critical item relays, switch contacts and contact members for burning, pitting, proper alignment, and discoloration caused by overheating. Closing coils are visually checked for deteriorated insulation and evidence of overheating or burning.

Critical item failures are immediately recognizable by the crane operator via an ammeter (loss of current) or Selsyn position indicator (position changes). When failure indication is noticed, crane operators secure the load in accordance with well-defined emergency instructions. Critical items identified during the System Assurance Analysis are documented in JSC NSTS 08399 Book 04, Critical Items List Kennedy Space Center Ground Support Equipment.

Ground controllers and E-stop operators are properly positioned during all phases of the lifting operation in full view of the load block, lifting fixtures, and fixture attach points. At least one E-stop operator, remote from the crane operator's cab, can stop the crane if a failure indication is observed.

All crane operators are certified and licensed per KMI 6430.4, Examination and Licensing of KSC Facility Crane Operators. Annual physicals for crane operators are required. Current crane operator certification is verified prior to lifting operations.

The bridge and trolley are limited to "fine" speed within 10 feet of flight hardware or structure.

2A. The SRM Four-Point Lifting Beam (H77-0384-02/03) was designed per KSC-DE-512-SM, Guide for Design Engineering of GSE for use at KSC, and SW-E-0002, Space Shuttle Program GSE General Design Requirements. The lifting beam has a design safety factor of greater than 5:1 based on ultimate strength. Lifting beam maintenance is per OMI B6195 (NSS/GO 1740.9B, NASA Safety Standard for Lifting Devices and Equipment) including annual load test. The System Assurance Analysis identified no critical items.

2B. The System Assurance Analysis for the 250-Ton Hydraset (SAA09FT08-028) identified a solenoid valve and two Bal seals (piston rod and head) which are Category 2 critical items. The failure effect of any of these critical items would be a maximum 12" hydraset lowering. Nominally, hydraset lowering is limited to approximately 6" because the hydraset is set at mid-stroke prior to lifting operations. The hydraset structural design safety factor is greater than 5:1 based on ultimate strength. In accordance with NASA and industry standards, initial proofload testing has been accomplished for all segment lifting system components. Annual load-testing and preventive maintenance are performed per NSS/GO 1740.9B, NASA Safety Standard for Lifting Devices

Hazard # :	**LL-0002**	Revision :	**B**	Revision Date :	**09/27/99**
Master # :	**K-SPC-00396-S-CR**	Date Identified :	**02/08/89**	Team / Log :	**LL / 2**

and Equipment. Per the File VI OMRSD (G20GHANM0.011), a full operational test of the hydraset is completed prior to each lift, including verification of hydraset leakage integrity with a 30,000 pound load. In addition OMRSD File VI (G20GHANM0.001) verifies periodic load test is current per OMI V6G99.

2C. The ET Forward Sling Set (H78-3006) has a design safety factor of 6:1 based on ultimate strength. OMI T6005 performs visual inspection and integrity verification of the sling set, as well as an annual load-test and preventive maintenance.

2D. The Orbiter Mating Sling Set (H70-0597) and Load Indicator Links (H72-1245), which is designed with a 5:1 safety factor, undergoes periodic preventive maintenance per OMI V6C04 and V6F59/60.

2E. The ET Aft Sling Set (H78-3004) requires an annual load test which is performed by OMI T6047, while OMI T6048 performs periodic inspections and maintenance on the mechanical system.

SUMMARY ACCEPTANCE RATIONALE :

A combination of design considerations, tests, maintenance, certifications, and procedural controls are employed to reduce the risk associated with the cranes to an acceptable level.

Design features of the crane are in compliance with NSS/GO-1740.9B with some approved exceptions. Factors of safety meeting or exceeding industry standards are included in the design. Crane GSE has been designed in accordance with KSC-DE-512-SM and SW-E-0002.

Tests include annual load tests of the cranes, hydrasets and lifting GSE, as well as crane operational checks under no-load and 100% load conditions, and braking tests.

Inspection, maintenance and certification of the cranes is in accordance with NSS/GO-1740.9B and includes daily, periodic, and pre-operation visual inspection of crane components. The 250/175-Ton crane motor generator set components are inspected at least semi-annually and critical items for the 325/250/175- Ton cranes are inspected annually and verified functional by operational tests. Extensive monthly, quarterly, semi-annual, annual and biennial preventive maintenance and testing is performed.

In addition to the foregoing, procedures are in effect which stop crane operations for any kind of anomaly, limit crane speed when in proximity to structures or flight hardware, establish control areas during lifting, and provide for proper communications among involved personnel.

OMI / TPS / WAD VERIFICATION :

OMI B5141 SRB Destack
OMI B5303 Stacking and Alignment Operations
OMI B6085 Disassembly/Reassembly/Validation, Lifting Beam Assembly H77-0384
OMI B6195 Preventive Maintenance SRM Segment Lifting Beam (H77-0384-1)
OMI B6246 PM/Validation,SRM Lifting Beam (H77-0384-03/-03A)
OMI Q3008 Operating Instructions, 175 and 250-Ton Bridge Cranes
OMI Q3521 Operational Instructions, 325-Ton Bridge Cranes
OMI Q6003 Maintenance Instructions, 175 & 250-Ton Bridge Cranes
OMI Q6339 Maintenance Instructions, 325-Ton Bridge Cranes
OMI S0003 ET Move and Mate SRB's
OMI S0004 Orbiter/ET Mate
OMI S0030 Orbiter/ET Demate
OMI S0033 ET Demate from SRB and Move ET
OMI T5002 ET Support Operations
OMI T6047 ET Handling Equipment Load Test
OMI T6048 Mechanical Systems Preventive Maintenance VAB SS33 & 20
OMI T6005 ET Forward Sling Set Maintenance Operations
OMI V6C04 Preventive Maintenance - Orbiter Mating Sling
OMI V6F59 Preventive Maintenance - Load Indicator Link 175-Ton Crane
OMI V6F60 Load Indicator Link 250-Ton Crane
OMI V6G99 PM, Calibration, Load Test and Validation of H72-0828-11 Hydraset

ESRs :

Hazard # :	**LL-0002**	Revision :	**B**	Revision Date :	**09/27/99**
Master # :	**K-SPC-00396-S-CR**	Date Identified :	**02/08/89**	Team / Log :	**LL / 2**

None.

SAA REFERENCES :

SAA09FY12-005 250-Ton Bridge Cranes at the VAB
SAA09FY12-006 175-Ton Bridge Crane at the VAB
SAA09FY120-001 325-Ton Bridge Crane at the VAB
SAA09FT08-028 250-Ton Hydraset
SAA09FT08-017 SRM Four-Point Lifting Beam
SAA09FT07-006 ET Forward Sling Set
SAA09FT09-010 Load Indicator Links

FMEA/CIL REFERENCES :

SAA09FT08-028:

Critical Item Name	Qty	FMEA/CIL Number	Critical Failure Mode	Crit Cat
Solenoid Valve (V7)	1*	09FT08-028.001	Fails Open (* - For Critical Item 09FT08-028.XXX, Qty=Per Hydraset)	2
Piston Head Bal Seal	1*	09FT08-028.002	Leakage (Internal)	2
Piston Rod Bal Seal	1*	09FT08-028.003	Leakage (External)	2

SAA09FY12-005:

Critical Item Name	Qty	FMEA/CIL Number	Critical Failure Mode	Crit Cat
Level Wind Assembly (79K16831-5)	1*	09FY12-005.001	Fails To Operate (* - For Critical Item 09FY12-005.XXX, QTY = Per Crane)	2
Cable Reel Assembly (79K16831-27) (M-16)	1*	09FY12-005.002	Fails to Provide Torque	2
Cable Reel Assembly (79K16831-27) (M-16)	1*	09FY12-005.003	Brake Solenoid Fails To Engage	2
Motor Generator Set, Main Hoist (M12-G4)	1*	09FY12-005.004	No Output	1
Master Control Switch, Main Hoist (1MC)	1*	09FY12-005.005	N.O. Contact Fails Closed	2
Relay, Main Hoist (1HCR)	1*	09FY12-005.006	N.O. Contact Fails Open	2
Relay, Main Hoist (1LCR)	1*	09FY12-005.007	N.O. Contact Fails Closed	2
Relay, Main Hoist (1HCR)	1*	09FY12-005.008	N.O. Contact Fails Open	2
Relay, Main Hoist (1LCR)	1*	09FY12-005.009	N.O. Contact Fails Closed	2
Relay, Main Hoist (HCR Run)	1*	09FY12-005.010	Coil Fails Open	2
Relay, Main Hoist (HCR Run)	1*	09FY12-005.011	N.O. Contact Fails Open	2
Relay, Main Hoist (HCR Run)	1*	09FY12-005.012	N.C. Contact Fails Closed	2
Relay, Main Hoist (LCR Run)	1*	09FY12-005.013	Coil Fails Open	2

Hazard # : **LL-0002** Revision : **B** Revision Date : **09/27/99**
Master # : **K-SPC-00396-S-CR** Date Identified : **02/08/89** Team / Log : **LL / 2**

Relay, Main Hoist (LCR Run)	1*	09FY12-005.014	N.O. Contact Fails Open	2
Relay, Main Hoist (LCR Run)	1*	09FY12-005.015	N.C. Contact Fails Closed	2
Relay, Main Hoist (1XR)	1*	09FY12-005.016	N.O. Contact Fails Closed	2
Relay, Main Hoist (1RUN)	1*	09FY12-005.018	"Pull In" Coil Fails Open	2
Relay, Main Hoist (1RUN)	1*	09FY12-005.019	N.O. Contact Fails Open or N.C. Contact Fails Closed	2
Potentiometer, Main Hoist (RPOT)	1*	09FY12-005.022	Fails Open	2
Foot Switch, Main Hoist (S2)	1*	09FY12-005.023	N.C. Contact Fails Open	2
Potentiometer, Main Hoist (FPOT)	1*	09FY12-005.025	Fails Open	2
Meter Relay, Main Hoist (M1)	1*	09FY12-005.029	High / Low Limit No. 2 N.C. Contact Fails Open	2
Relay, Main Hoist (K10)	1*	09FY12-005.030	Coil Fails Open	2
Relay, Main Hoist (K10)	1*	09FY12-005.031	N.O. Contact Fails Open	2
Motor, Main Hoist (M13, M14)	2*	09FY12-005.032	Open Armature Winding	1
Relay, Main Hoist (1VR)	1*	09FY12-005.033	N.O. Contact Fails Closed	2
Synchro Transmitter / Receiver Assembly, Main Hoist (1SYNT / 1SYNR1)	1*	09FY12-005.034	Erroneous Output	2
Motor-Generator Set, Auxiliary Hoist (M9-G3)	1*	09FY12-005.035	No Output	2
Master Control Switch, Auxiliary Hoist (2MC)	1*	09FY12-005.036	N.O. Contact Fails Closed	2
Hoist Control Relay, Auxiliary Hoist (2HCR)	1*	09FY12-005.037	N.O. Contact Fails Open	2
Hoist Control Relay, Auxiliary Hoist (2HCR)	1*	09FY12-005.038	N.O. Contact Fails Closed	2
Hoist Control Relay, Auxiliary Hoist (2HCR)	1*	09FY12-005.039	N.O. Contact Fails Open	2
Hoist Control Relay, Auxiliary Hoist (2LCR)	1*	09FY12-005.040	N.O. Contact Fails Closed	2
Relay, Auxiliary Hoist (HCR Run)	1*	09FY12-005.041	Coil Fails Open	2
Relay, Auxiliary Hoist (HCR Run)	1*	09FY12-005.042	N.O. Contact Fails Open	2
Relay, Auxiliary Hoist (HCR Run)	1*	09FY12-005.043	N.C. Contact Fails Closed	2
Relay, Auxiliary Hoist (LCR Run)	1*	09FY12-005.044	Coil Fails Open	2
Relay, Auxiliary Hoist (LCR Run)	1*	09FY12-005.045	N.O. Contact Fails Open	2
Relay, Auxiliary Hoist (LCR Run)	1*	09FY12-005.046	N.C. Contact Fails Closed	2
Relay, Auxiliary Hoist (2XR)	1*	09FY12-005.047	N.O. Contact Fails Closed	2
Relay, Auxiliary Hoist (2RUN)	1*	09FY12-005.049	"Pull In" Coil Fails Open	2

Hazard # : **LL-0002** Revision : **B** Revision Date : **09/27/99**
Master # : **K-SPC-00396-S-CR** Date Identified : **02/08/89** Team / Log : **LL / 2**

Relay, Auxiliary Hoist (2RUN)	1*	09FY12-005.050	N.O. Contact Fails Open or N.C. Contact Fails Closed	2
Potentiometer, Auxiliary Hoist (RPOT)	1*	09FY12-005.053	Fails Open	2
Foot Switch, Auxiliary Hoist (S2)	1*	09FY12-005.054	N.C. Contact Fails Open	2
Foot Switch, Auxiliary Hoist (FPOT)	1*	09FY12-005.056	Fails Open	2
Meter Relay, Auxiliary Hoist (M2)	1*	09FY12-005.060	High / Low Limit No. 2 N.C. Contact Fails Open	2
Relay, Auxiliary Hoist (K9)	1*	09FY12-005.061	Coil Fails Open	2
Relay, Auxiliary Hoist (K9)	1*	09FY12-005.062	N.O. Contact Fails Open	2
Motor, Auxiliary Hoist (M10, M11)	2*	09FY12-005.063	Open Armature Winding	2
Relay, Auxiliary Hoist (2VR)	1*	09FY12-005.064	N.O. Contact Fails Closed	2
Synchro Transmitter / Receiver Assembly, Auxiliary Hoist (2SYNT / 2SYNR2)	1*	09FY12-005.065	Erroneous Output	2
Synchro Transmitter / Receiver Assembly, Bridge (3SYNT, 3SYNR)	1*	09FY12-005.066	Erroneous Output	2
Synchro Transmitter / Receiver Assembly, Trolley (4SYNT, 4SYNR)	1*	09FY12-005.067	Erroneous Output	2
Swivel Control Switch (5MC)	1*	09FY12-005.068	N.O. Contact SS4-2 Fails Closed	2
Swivel Control Switch (5MC)	1*	09FY12-005.069	N.O. Contact SS4-1 Fails Closed	2
Hook Swivel Control Relay (CW)	1*	09FY12-005.070	Fails Activated (Contacts Remain in the Energized Position)	2
Hook Swivel Control Relay (CCW)	1*	09FY12-005.071	Fails Activated (Contacts Remain in the Energized Position)	2
Resistor, Main Hoist (1RR4A, 1RR4B)	2*	09FY12-005.072	Fails Open	2
Resistor, Main Hoist (1RR7)	1*	09FY12-005.073	Fails Open	2
Generator, Field DC Input Controller, Main Hoist (1FC)	1*	09FY12-005.074	No Output	2
Relay, Main Hoist (1XR1)	1*	09FY12-005.075	Coil Fails Open	2
Relay, Main Hoist (1XR1)	1*	09FY12-005.076	N.O. Contact Fails Open	2
Relay, Main Hoist (1XR1)	1*	09FY12-005.077	N.O. Contact Fails Open	2
Relay, Main Hoist (1XR1)	1*	09FY12-005.078	N.O. Contact Fails Open	2
Generator, Field DC Input Controller, Main Hoist (1FC)	1*	09FY12-005.079	High Output (Not Inverted)	1
Generator, Field DC Input Controller, Main Hoist (1FC)	1*	09FY12-005.080	High Output (Inverted)	1
Generator, Field DC Input Controller, Bridge (3FC)	1*	09FY12-005.081	High Output (Not Inverted)	2

Hazard # : **LL-0002** Revision : **B** Revision Date : **09/27/99**
Master # : **K-SPC-00396-S-CR** Date Identified : **02/08/89** Team / Log : **LL / 2**

Generator, Field DC Input Controller, Bridge (3FC)	1*	09FY12-005.082	High Output (Inverted)	2
Generator, Field DC Input Controller, Trolley (4FC)	1*	09FY12-005.083	High Output (Not Inverted)	2
Generator, Field DC Input Controller, Trolley (4FC)	1*	09FY12-005.084	High Output (Inverted)	2
Generator, Field DC Input Controller, Auxiliary Hoist (2FC)	1*	09FY12-005.085	No Output	2
Generator, Field DC Input Controller, Auxiliary Hoist (2FC)	1*	09FY12-005.086	High Output (Not Inverted)	2
Generator, Field DC Input Controller, Auxiliary Hoist (2FC)	1*	09FY12-005.087	High Output (Inverted)	2
Resistor, Auxiliary Hoist (2RR4A, 2RR4B)	2*	09FY12-005.088	Fails Open	2
Resistor, Auxiliary Hoist (2RR7)	1*	09FY12-005.089	Fails Open	2
Resistor, Auxiliary Hoist (2XR1)	1*	09FY12-005.090	Coil Fails Open	2
Resistor, Auxiliary Hoist (2XR1)	1*	09FY12-005.091	N.O. Contact Fails Open	2
Resistor, Auxiliary Hoist (2XR1)	1*	09FY12-005.092	N.O. Contact Fails Open	2
Resistor, Auxiliary Hoist (2XR1)	1*	09FY12-005.093	N.O. Contact Fails Open	2
Potentiometer, Bridge (RPOT)	1*	09FY12-005.096	Fails Open	2
Potentiometer, Trolley (RPOT)	1*	09FY12-005.097	Fails Open	2
Relay, Main Hoist (1FW)	1*	09FY12-005.098	Coil Fails Open	1
Relay, Main Hoist (1FW)	1*	09FY12-005.099	N.O. Contact Fails Open	1
Relay, Main Hoist (1SRX)	1*	09FY12-005.100	Coil Fails Open	1
Relay, Main Hoist (1SRX)	1*	09FY12-005.101	N.O. Contact Fails Open	1
Relay, Main Hoist (1KR)	1*	09FY12-005.102	N.O. Contact Fails Open	1
Relay, Main Hoist (1HS)	1*	09FY12-005.103	N.C. Contact Fails Open	1
Transformer (4TR3)	1*	09FY12-005.104	Winding Fails Open or Shorted	1
Circuit Breaker (12CB)	1*	09FY12-005.105	Contact Fails Open	1
Relay, Auxiliary Hoist (2FW)	1*	09FY12-005.106	Coil Fails Open	2
Relay, Auxiliary Hoist (2FW)	1*	09FY12-005.107	N.O. Contact Fails Open	2
Relay, Auxiliary Hoist (2SRX)	1*	09FY12-005.108	Coil Fails Open / Fails Deactivated	2
Relay, Auxiliary Hoist (2FW)	1*	09FY12-005.109	N.O. Contact Fails Open	2
Relay, Auxiliary Hoist (2KR)	1*	09FY12-005.110	N.O. Contact Fails Open	2
Relay, Auxiliary Hoist (2HS)	1*	09FY12-005.111	N.C. Contact Fails Open	2
Foot Switch, Main Hoist (S2)	1*	09FY12-005.116	N.O. Contact Fails Closed	2

Foot Switch, Main Hoist (S2)	1*	09FY12-005.117	N.C. Contact Fails Closed	2
Foot Switch, Auxiliary Hoist (S2)	1*	09FY12-005.118	N.O. Contact Fails Closed	2
Foot Switch, Auxiliary Hoist (S2)	1*	09FY12-005.119	N.C. Contact Fails Closed	2

SAA09FY12-006:

Critical Item Name	Qty	FMEA/CIL Number	Critical Failure Mode	Crit Cat
Cable Reel Assembly (79K16830-8) (M-16)	1	09FY12-006.002	Fails To Provide Torque	2
Cable Reel Assembly (79K16830-8) (M-16)	1	09FY12-006.003	Brake Solenoid Fails To Engage	2
Motor-Generator Set, Main Hoist (M12-G4)	1	09FY12-006.004	No Output	1
Master Control Switch, Main Hoist (1MC)	1	09FY12-006.005	N.O. Contact Fails Closed	2
Relay, Main Hoist (1HCR)	1	09FY12-006.006	N.O. Contact Fails Open	2
Relay, Main Hoist (1HCR)	1	09FY12-006.007	N.O. Contact Fails Closed	2
Relay, Main Hoist (1LCR)	1	09FY12-006.008	N.O. Contact Fails Open	2
Relay, Main Hoist (1LCR)	1	09FY12-006.009	N.O. Contact Fails Closed	2
Relay, Main Hoist (HCR RUN)	1	09FY12-006.010	Coil Fails Open	2
Relay, Main Hoist (HCR RUN)	1	09FY12-006.011	N.O. Contact Fails Open	2
Relay, Main Hoist (HCR RUN)	1	09FY12-006.012	N.C. Contact Fails Closed	2
Relay, Main Hoist (LCR RUN)	1	09FY12-006.013	Coil Fails Open	2
Relay, Main Hoist (LCR RUN)	1	09FY12-006.014	N.O. Contact Fails Open	2
Relay, Main Hoist (LCR RUN)	1	09FY12-006.015	N.C. Contact Fails Closed	2
Relay, Main Hoist (1XR)	1	09FY12-006.016	N.O. Contact Fails Closed	2
Relay, Main Hoist (1RUN)	1	09FY12-006.018	"Pull In" Coil Fails Open	2
Relay, Main Hoist (1RUN)	1	09FY12-006.019	N.O. Contact Fails Open or N.C. Contact Fails Closed	2
Potentiometer, Main Hoist (RPOT)	1	09FY12-006.022	Fails Open	2
Foot Switch, Main Hoist (S2)	1	09FY12-006.023	N.O. Contact Fails Open	2
Potentiometer, Main Hoist (FPOT)	1	09FY12-006.025	Fails Open	2
Meter Relay, Main Hoist (m1)	1	09FY12-006.029	High/Low Limit No. 2 N.C. Contact Fails Open	2
Relay, Main Hoist (K10)	1	09FY12-006.030	Coil Fails Open	2
Relay, Main Hoist (K10)	1	09FY12-006.031	N.O. Contact Fails Open	2
DC Motor, Main Hoist (M13, M14)	2	09FY12-006.032	Open Armature Winding	1

Hazard # : **LL-0002** Revision : **B** Revision Date : **09/27/99**
Master # : **K-SPC-00396-S-CR** Date Identified : **02/08/89** Team / Log : **LL / 2**

Relay, Main Hoist (1VR)	1	09FY12-006.033	N.O. Contact Fails Closed	2
Motor - Generator Set, Auxiliary Hoist (M9-G3)	1	09FY12-006.035	No Output	2
Master Control Switch, Auxiliary Hoist (2MC)	1	09FY12-006.036	N.O. Contacts Fail Closed	2
Relay, Auxiliary Hoist (2HCR)	1	09FY12-006.037	N.O. Contacts Fail Open	2
Relay, Auxiliary Hoist (2HCR)	1	09FY12-006.038	N.O. Contacts Fail Closed	2
Relay, Auxiliary Hoist (2LCR)	1	09FY12-006.039	N.O. Contacts Fail Open	2
Relay, Auxiliary Hoist (2LCR)	1	09FY12-006.040	N.O. Contacts Fail Closed	2
Relay, Auxiliary Hoist (HCR RUN)	1	09FY12-006.041	Coil Fails Open	2
Relay, Auxiliary Hoist (HCR RUN)	1	09FY12-006.042	N.O. Contact Fails Open	2
Relay, Auxiliary Hoist (HCR RUN)	1	09FY12-006.043	N.O. Contact Fails Closed	2
Relay, Auxiliary Hoist (LCR RUN)	1	09FY12-006.044	Coil Fails Open	2
Relay, Auxiliary Hoist (LCR RUN)	1	09FY12-006.045	N.O. Contact Fails Open	2
Relay, Auxiliary Hoist (LCR RUN)	1	09FY12-006.046	N.C. Contact Fails Closed	2
Relay, Auxiliary Hoist (2XR)	1	09FY12-006.047	N.O. Contact Fails Closed	2
Relay, Auxiliary Hoist (2RUN)	1	09FY12-006.049	"Pull In" Coil Fails Open	2
Relay, Auxiliary Hoist (2RUN)	1	09FY12-006.050	N.O. Contact Fails Open or N.C. Contact Fails Closed	2
Potentiometer, Auxiliary Hoist (RPOT)	1	09FY12-006.053	Fails Open	2
Foot Switch, Auxiliary Hoist (S2)	1	09FY12-006.054	N.O. Contact Fails Open	2
Potentiometer, Auxiliary Hoist (FPOT)	1	09FY12-006.056	Fails Open	2
Meter Relay, Auxiliary Hoist (M2)	1	09FY12-006.060	High / Low Limit No. 2 N.C. Contact Fails Open	2
Relay, Auxiliary Hoist (K9)	1	09FY12-006.061	Coil Fails Open	2
Relay, Auxiliary Hoist (K9)	1	09FY12-006.062	N.O. Contact Fails Open	2
D.C. Motor, Auxiliary Hoist (M10, M11)	2	09FY12-006.063	Open Armature Winding	2
Relay, Auxiliary Hoist (2VR)	1	09FY12-006.064	N.O. Contact Fails Closed	2
Resistor, Main Hoist (1RR4A, 1RR4B)	2	09FY12-006.065	Fails Open	2
Resistor, Main Hoist (1RR7)	1	09FY12-006.066	Fails Open	2
Generator Field DC Input Controller, Main Hoist (1FC)	1	09FY12-006.067	No Output	2
Relay, Main Hoist (1XR1)	1	09FY12-006.068	Coil Fails Open	2
Relay, Main Hoist (1XR1)	1	09FY12-006.069	N.O. Contact Fails Open	2

Hazard # : **LL-0002** Revision : **B** Revision Date : **09/27/99**
Master # : **K-SPC-00396-S-CR** Date Identified : **02/08/89** Team / Log : **LL / 2**

Relay, Main Hoist (1XR1)	1	09FY12-006.070	N.O. Contact Fails Open	2
Relay, Main Hoist (1XR1)	1	09FY12-006.071	N.O. Contact Fails Open	2
Generator Field DC Input Controller, Main Hoist (1FC)	1	09FY12-006.072	High Output (Not Inverted)	2
Generator Field DC Input Controller, Main Hoist (1FC)	1	09FY12-006.073	High Output (Inverted)	2
Generator Field DC Input Controller, Bridge (3FC)	1	09FY12-006.074	High Output (Not Inverted)	2
Generator Field DC Input Controller, Bridge (3FC)	1	09FY12-006.075	High Output (Inverted)	2
Generator Field DC Input Controller, Trolley (4FC)	1	09FY12-006.076	High Output (Not Inverted)	2
Generator Field DC Input Controller, Trolley (4FC)	1	09FY12-006.077	High Output (Inverted)	2
Resistor, Auxiliary Hoist (1RR4A, 2RR4B)	2	09FY12-006.078	Fails Open	2
Resistor, Auxiliary Hoist (2RR7)	1	09FY12-006.079	Fails Open	2
Relay, Auxiliary Hoist (2XR1)	1	09FY12-006.080	Coil Fails Open	2
Relay, Auxiliary Hoist (2XR1)	1	09FY12-006.081	N.O. Contact Fails Open	2
Relay, Auxiliary Hoist (2XR1)	1	09FY12-006.082	N.O. Contact Fails Open	2
Relay, Auxiliary Hoist (2XR1)	1	09FY12-006.083	N.O. Contact Fails Open	2
Generator Field DC Input Controller, Auxiliary Hoist (2FC)	1	09FY12-006.084	No Output	2
Generator Field DC Input Controller, Auxiliary Hoist (2FC)	1	09FY12-006.085	High Output (Not Inverted)	2
Generator Field DC Input Controller, Auxiliary Hoist (2FC)	1	09FY12-006.086	High Output (Inverted)	2
Relay, Main Hoist (1KR)	1	09FY12-006.095	N.O. Contact Fails Open	2
Foot Switch, Main Hoist (S2)	1	09FY12-006.096	N.O. Contact Fails Closed	2
Foot Switch, Main Hoist (S2)	1	09FY12-006.097	N.C. Contact Fails Closed	2
Relay, Main Hoist (1HS)	1	09FY12-006.098	N.C. Contact Fails Open	2
Relay, Main Hoist (1FW)	1	09FY12-006.099	Coil Fails Open	2
Relay, Main Hoist (1FW)	1	09FY12-006.100	N.O. Contact Fails Open	2
Relay, Main Hoist (1SRX)	1	09FY12-006.101	Coil Fails Open	2
Relay, Main Hoist (1SRX)	1	09FY12-006.102	N.O. Contact Fails Open	2
Synchro Transmitter and Receiver Assembly, Main Hoist (1SYNT / 1SYNR1)	1	09FY12-006.103	Erroneous Output	2
Relay, Auxiliary Hoist (2HS)	1	09FY12-006.105	N.C. Contact Fails Open	2

Hazard # : **LL-0002** Revision : **B** Revision Date : **09/27/99**
Master # : **K-SPC-00396-S-CR** Date Identified : **02/08/89** Team / Log : **LL / 2**

Relay, Auxiliary Hoist (2FW)	1	09FY12-006.106	Coil Fails Open	2
Relay, Auxiliary Hoist (2FW)	1	09FY12-006.107	N.O. Contact Fails Open	2
Foot Switch, Auxiliary Hoist (S2)	1	09FY12-006.108	N.O. Contact Fails Closed	2
Foot Switch, Auxiliary Hoist (S2)	1	09FY12-006.109	N.C. Contact Fails Closed	2
Relay, Auxiliary Hoist (2KR)	1	09FY12-006.110	N.O. Contact Fails Open	2
Relay, Auxiliary Hoist (2SRX)	1	09FY12-006.111	Coil Fails Open	2
Relay, Auxiliary Hoist (2SRX)	1	09FY12-006.112	N.O. Contact Fails Open	2
Synchro Transmitter and Receiver Assembly, Auxiliary Hoist (2SYNT / 2SYNR)	1	09FY12-006.113	Erroneous Output	2
Synchro Transmitter and Receiver Assembly, Auxiliary Hoist (3SYNT / 3SYNR)	1	09FY12-006.114	Erroneous Output	2
Potentiometer, Bridge (RPOT)	1	09FY12-006.115	Fails Open	2
Potentiometer, Trolley (RPOT)	1	09FY12-006.116	Fails Open	2
Synchro Transmitter and Receiver Assembly, Trolley (4SYNT / 4SYNR)	1	09FY12-006.117	Erroneous Output	2
Circuit Breaker (12CB)	1	09FY12-006.118	Contact Fails Open	2
Transformer (4TR3)	1	09FY12-006.119	Windings Fail Open or Shorted	2

SAA09FY120-001:

Critical Item Name	Qty	FMEA/CIL Number	Critical Failure Mode	Crit Cat
Main Hoist Gear Reducer	2	09FY120-001.001	Gear disengages	1R
Main Hoist Pinion Gear Coupling	2	09FY120-001.002	Key disengages	1R
Main Hoist Brake Wheel	2	09FY120-001.003	Key disengages	1R
Main Hoist Electric Brake	2	09FY120-001.004	Stuck mechanism, worn or glazed shoes	1R
Main Hoist Pinion Gear	2	09FY120-001.005	Gear disengages	1R
Main Hoist Drum Gear	2	09FY120-001.006	Gear disengages	1R
Auxiliary Hoist Gear Reducer	2	09FY120-001.007	Gear disengages	1R
Auxiliary Hoist Pinion Gear Coupling	2	09FY120-001.008	Key disengages	1R
Auxiliary Hoist Brake Wheel	2	09FY120-001.009	Key disengages	1R
Auxiliary Hoist Electric Brake	2	09FY120-001.010	Stuck mechanism, worn or glazed shoes	1R
Auxiliary Hoist Pinion Gear	2	09FY120-001.011	Gear disengages	1R
Auxiliary Hoist Drum Gear	2	09FY120-001.012	Gear disengages	1R
Cable Reel	4	09FY120-001.013	Motor shaft failure	2

Hazard # : **LL-0002**	Revision : **B**	Revision Date : **09/27/99**
Master # : **K-SPC-00396-S-CR**	Date Identified : **02/08/89**	Team / Log : **LL / 2**

Cable Reel	4	09FY120-001.014	Gear reducer failure	2
Cable Reel	4	09FY120-001.015	Coupling failure	2
Programmable Logic Controller (PLC) CPU Module	2	09FY120-001.016	Internal component failure or software failure	1

BACKGROUND :

Level II/I PRCBD S40224M-R3, dated 8/18/89, approved a permanent waiver for VAB 250/175-Ton crane CILs. Level II/I PRCBD S050234AH was approved 11/18/92 and replaces the previously approved CILs associated with the metadyne controller with the CILs associated with the new solid state controller design.

The solid state controllers have resolved a number of concerns associated with both the 175- and 250-Ton VAB cranes.

In response to Level II PRCB S40224MR2, KSC-TM Action Item 2-1, the following KSC hazard reports associated with the 250/175-Ton VAB cranes have been updated to reference the crane critical items and hazard report LL-0002 (Replaces RT-ENG-1027).

-LL-0005: Inadvertent Ignition of SRMs in the VAB (Replaces IHA-019)
-RT-ENG-1019: Personnel Working Under Suspended Loads
-LL-0012: Personnel Working Under Suspended Loads (Replaces RT-ENG-1019)

ESR status:
K13966, Replacement of Metadynes with Solid State Crane Controls - ESR complete per CCBD E-K13966-G Rev. 2 on 11/01/93.
K14184, Elimination of Single Failure Points in Electrical Control System of 250/175 Ton Cranes - ESR canceled 10/21/91 per PCIN 58258 CCBD number SSP-07608 R2.
K14593, Modify ET FWD Sling and ET Storage/Checkout Cells - ESR canceled 1/19/93 per CCBD E-K14593-G based on rationale that procedural changes were made to supporting OMIs, thereby abating personnel working under a suspended load.
K14596, Abatement Designs for Working Under Suspended Loads - ESR complete per PRCB S052234-6 5/21/96.

INTERFACES :

None.

STATUS OF OPEN WORK :

None.

REMARKS :

3/17/89 - This hazard report was approved by the Joint NASA Level III Configuration Control Board/SPC Risk Review Board.

4/11/89 - This hazard report was presented to the Level II/I PRCB and approved. Hazard cause has been updated to include 'worst case' rate of load dropping due to critical item failure. Hazard control rationale revised to reflect critical item inspection frequency. Background expanded to discuss VAB 250/175-Ton Crane modifications.

11/5/91 - Update to hazard report includes additional PMNs, OMRSD File VI, SAAs and OMIs. Update to hazard includes addition of ESR K13966, which replaces ESR K14184, and addresses replacement of metadyne units with solid state components and overvoltage protection relay in the DC motor loop.

10/31/95 - Periodic update performed. This hazard report was previously submitted in CR 50414D. Level III CCB approval date 3/17/89; SSRP presentation date 3/29/89; Level II/I PRCB approval date 4/11/89.

07/16/96 - Changed Hazard Report Number RT-ENG-1027 to LL-0002.

09/27/99 - Periodic update performed during revision to SAA09FY07-006. Update to hazard report includes additional PMNs, OMRSD File VI, SAAs and OMIs associated with 325-ton cranes. Hazard report previously approved by CCB 9/11/96.

Hazard # : **LL-0005** Revision : **A** Revision Date : **12/08/95**
Master # : **K-SPC-00256-S-PS** Date Identified : **11/09/87** Team / Log : **LL / 5**

Title : **INADVERTENT IGNITION OF SOLID ROCKET MOTORS IN THE VAB RESULTING IN LOSS OF LIFE AND/OR VEHICLE**

CONFIGURATION DATA

Responsible Organization : **SFOC GO**
Mission Effectivity : **26+**
CR : **PCIN 68052**
Mission Phase : **GROUND PROCESSING**
Location/Station Sets : **20**
Baselines : **246.00, 315.55, 353.40, 389.00**

Program Model Numbers : **H72-0828-11, H72-1200-01, K60-0533, K60-0534, K61-0402-01, P77-0828-01, P77-0828-01A**

Flow Segments : **LRR, VABM, VABO, VABS**

HAZARDS ANALYSIS DATA

Report Status : **CLOSED**
Closure Class : **ACCEPTED RISK**

Worst Case Cause : **1a,1c,2a,2b,2d,2h,3j,..**
Severity : **CATASTROPHIC**
Likelihood : **REMOTE**

Hazard Type : **SHUTTLE**

Prepared By : **SPC**
Mail Code : **USK-291**

Analysis Type : **OPERATING & SUPPORT**

RISK MATRIX

Hazard severity and likelihood of occurrence with controls in place
(see associated cause #)

LIKELIHOOD	MARGINAL	CRITICAL	CATASTR.
PROBABLE			
INFREQUENT			
REMOTE			1a,1c,2a2b ,2d,2h3j,..
IMPROBABLE			1b,2c,2e2f, 2g,3d3e,..

SEVERITY LEVELS

- CONTROLLED
- ACCEPTED RISK
- UNACCEPTABLE

APPROVALS :		DATE :	DATE APPROVED :	
Safety Engineer :	**Roger K. Paul**	**12/08/95**	CCB :	**10/28/96**
Contractor System / Design Engineer :	**Sharon L. Myers**	**12/08/95**	SSRP :	**01/15/97**
Contractor Safety Manager (1) :	**A. M. Stevens**	**12/12/95**	PRCB :	
Contractor Safety Manager (2) :	**James W. Rudolph**	**12/12/95**		
NASA System Engineer :	**Lynn A Barnett**	**12/11/95**		
NASA Safety Manager (1) :	**Daryl L. Frank**	**06/13/96**		
NASA Safety Manager (2) :	**Joel R. Reynolds**	**06/17/96**		

Hazard # :	**LL-0005**	Revision :	**A**	Revision Date :	**12/08/95**
Master # :	**K-SPC-00256-S-PS**	Date Identified :	**11/09/87**	Team / Log :	**LL / 5**

HAZARD DESCRIPTION :

The Vehicle Assembly Building (VAB) at Kennedy Space Center (KSC) is a U.S. National Resource Facility consisting of four high bays, six towers, and two low bays. High Bays 1 and 3 are used primarily for the stacking, testing, checkout, and integration of the Space Shuttle Redesigned Solid Rocket Motors (RSRMs), External Tank (ET), and Orbiter Vehicle with an MLP. High Bays 2 and 4 are used for ET storage, processing, and checkout. Additional shuttle operational areas located within the VAB include the Space Shuttle Main Engine (SSME) shop, tire/wheel shop, clean labs, battery labs, contingency Orbiter storage, Extended Duration Orbiter (EDO) system storage/checkout area, and office space. Normal SRM processing within the VAB includes transporting of RSRM segments into the VAB, inspection/test/checkout while in the VAB, and stacking of segments on the MLP through lifting/handling of individual segments. During any of these or other ancillary operations the possibility exists for an inadvertent ignition of an RSRM segment resulting in loss of life and/or vehicle. An ignited segment will burn intensely, and there is a possibility the forward segment may become propulsive. An analysis performed by Morton Thiokol Corp., TWR 11389 concluded that fire would inevitably propagate to the other segments. The potential damage from an RSRM mishap or inadvertent ignition in the VAB would be catastrophic.

HAZARD CAUSE:

Ignition of an RSRM propellant could occur from various sources. These sources are amplified during RSRM processing, especially during periods when propellant grain is exposed. The most credible source or cause of inadvertent ignition of an RSRM is from the handling/hoisting impacts during RSRM segment processing and stacking. Additional causes of ignition could be friction, high heat, impact, static/electrical discharge, and/or reactions from other interfacing materials/equipment. The following is a listing of generic sources that could result in an inadvertent ignition in the VAB:

1. Friction - Contamination of a mating surface with propellant, striking, rubbing, dragging, abrasive motions, mishandling, procedural error, and/or human error, specifically:

1a. (ACCEPTED RISK/CATASTROPHIC/REMOTE) - Improper segment placement.
1b. (CONTROLLED/CATASTROPHIC/IMPROBABLE) - Friction on mating surface - propellant contamination on tang or clevis.
1c. (ACCEPTED RISK/CATASTROPHIC/REMOTE) - Hydraset or crane operator error.
1d. (ELIMINATED) - Transporter steering failure.
1e. (ELIMINATED) - Transporter operator error.

2. High Heat - Adjacent area fire, matches, smoking, cigarette lighter, welding/cutting, SRM transporter fire, hydraulic fire, electrical shorts, pyrotechnics, improper equipment/procedures, or Crawler Transporter/MLP System failure/fire, specifically:

2a. (ACCEPTED RISK/CATASTROPHIC/REMOTE) - Violation of open flame policy.
2b. (ACCEPTED RISK/CATASTROPHIC/REMOTE) - Electrical failure of platform lights.
2c. (CONTROLLED/CATASTROPHIC/IMPROBABLE) - Electrical failure of crane control system wiring.
2d. (ACCEPTED RISK/CATASTROPHIC/REMOTE) - Electrical failure of GSE.
2e. (CONTROLLED/CATASTROPHIC/IMPROBABLE) - Fire on platforms.
2f. (CONTROLLED/CATASTROPHIC/IMPROBABLE) Fire caused by IC engines on Transporter.
2g. (CONTOLLED/CATASTROPHIC/IMPROBABLE) - Hydraulic leak/fire (Transporter, 250-Ton Crane, platform winches/hoists).
2h. (ACCEPTED RISK/CATASTROPHIC/REMOTE) - High heat/fire from GSE.

3. Impact - 325/250-Ton crane failure/Hydraset failure/lifting beam failure, segment hoisting mishandling maneuvering - dropping, loss of control, SRM pallet degradation, personnel error, items being dropped or impacted on open grain, or communications problems, specifically:

3a. (ELIMINATED) - Structural failure of platforms.
3b. (ELIMINATED) - Pallet structure failure.
3c. (ELIMINATED) - SRM four point lifting beam failure.
3d. (CONTROLLED/CATASTROPHIC/IMPROBABLE) - Loss of crane bridge/trolley control speeds.
3e. (CONTROLLED/CATASTROPHIC/IMPROBABLE) - 325/250/175-Ton Crane hook failure.
3f. (ELIMINATED) - 325/250-Ton Crane brake failure.
3g. (ELIMINATED) - 325/250/175-Ton Crane wire rope failure.
3h. (CONTROLLED/CATASTROPHIC/IMPROBABLE) - 250-Ton hydraset seal failure.

3i. (ELIMINATED) - 250-Ton hydraset structural failure.
3j. (ACCEPTED RISK/CATASTROPHIC/REMOTE) - Crane E-stop operator fails to push E-stop on 325/250-ton crane.
3k. (ACCEPTED RISK/CATASTROPHIC/REMOTE) - Crane operator miscommunications.
3l. (ACCEPTED RISK/CATASTROPHIC/REMOTE) - Untethered tools.
3m. (ELIMINATED) - Lack of toe boards along railings, walkways, and platforms.
3n. (CONTROLLED/CATASTROPHIC/IMPROBABLE) - Wind blown objects/Lack of upper level housekeeping/wind blowing.
3o. (CONTROLLED/CATASTROPHIC/IMPROBABLE) - Inadequate protection of open grain.
3p. (CONTROLLED/CATASTROPHIC/IMPROBABLE) - Lack of hazardous operations control above and around the segments.

4. Static/electric discharge - Grounding failure, inadequate electrical bonding, inadequate/improper material for grounding, clothing, packaging, improper plastic/nylon usage, lack of grounding straps, procedural call-out error, communications, excessive current, damaged wire, working on live circuits, disconnecting live circuits/arcing, performing maintenance/removal/repair, human error, specifically:

4a. (ACCEPTED RISK/CATASTROPHIC/REMOTE) - Excessive current/short.
4b. (CONTROLLED/CATASTROPHIC/IMPROBABLE) - Damaged wiring (250/325-Ton Cranes).
4c. (ACCEPTED RISK/CATASTROPHIC/REMOTE) - Lack of maintenance/wear.
4d. (CONTROLLED/CATASTROPHIC/IMPROBABLE) - Improper hook-up of SRB cable installation
4e. (ACCEPTED RISK/CATASTROPHIC/REMOTE) - Operator working on live circuit.
4f. (ACCEPTED RISK/CATASTROPHIC/REMOTE) - Improper handling.
4g. (CONTROLLED/CATASTROPHIC/IMPROBABLE) - Improper material.
4h. (ACCEPTED RISK/CATASTROPHIC/REMOTE) - Lightning.
4i. (ACCEPTED RISK/CATASTROPHIC/REMOTE) - Personnel error failure to monitor humidity and follow ESD procedures.
4j. (CONTROLLED/CATASTROPHIC/IMPROBABLE) - Improper hook-up grounding/bonding connections.
4k. (CONTROLLED/CATASTROPHIC/IMPROBABLE) - Gas flow GSE not utlizing conductive air hoses/improperly grounded

5. Reactions - Reactions from incompatible materials, wrong materials, improper mixtures/quantities, exothermic reaction and ignition (Insta-Foam), labeling errors, solvents/lubricant spillage, contamination, human error/procedure, specifically:

5a. (CONTROLLED/CATASTROPHIC/IMPROBABLE) - Improper mix/application quantity - human error.
5b. (CONTROLLED/CATASTROPHIC/IMPROBABLE) - Improper mix quantity - measuring equipment error.
5c. (CONTROLLED/CATASTROPHIC/IMPROBABLE) - Use of wrong material - labeling error.
5d. (CONTROLLED/CATASTROPHIC/IMPROBABLE) - Use of wrong material - human error.
5e. (CONTROLLED/CATASTROPHIC/IMPROBABLE) - Use of wrong material - procedural error.

HAZARD EFFECTS :

The result of inadvertent ignition in the VAB would be catastrophic to the facility, flight hardware, and personnel. Damage to the VAB structure and surrounding equipment would be major. Should inadvertent ignition occur during 325/250-Ton crane operations, the two crane operators could be lost in the fire; should this occur during shift change, more than 550 personnel could be exposed to the conflagration. Although the possibility of inadvertent ignition of RSRM or RSRB is sufficiently remote, should it occur the VAB and its contents would presumably be lost. The RSRM propellant is relatively insensitive to ignition under normal conditions. The auto ignition temperature of an RSRM segment is 665 degrees F and once ignited is non-extinguishable, burning at 5000 degrees F. This temperature far exceeds the auto-ignition point of nearby RSRBs and should cause these segments to ignite. Within ten to twenty seconds after a point ignition, the entire segment bore will be burning continuously for approximately 850 seconds. The radiant heat level within 150 feet of a full burning segment is immediately lethal to those exposed. Within 25 to 30 seconds of ignition of an SRM segment, a toxic cloud will form in the VAB. This cloud will consist largely of hydrogen chloride (HCl), aluminum oxide (Al_2O_3), chlorine (Cl_2), and carbon monoxide (CO) gases. Peculiarities of these gases are:

1. HCl gas: exposure to HCl gas may cause damage to the respiratory system, lungs, eyes, and skin. The immediate danger to life/health (IDLH) level is 100 ppm. The TLV is 5 ppm.
2. Al_2O_3 gas: Al_2O_3 gas is inert and should not cause damage unless inhaled into the lungs, which may cause edema.
3. Cl_2 gas: exposure to Cl_2 gas may cause damage to the respiratory system and lungs. The IDLH level is 25 ppm.

Hazard # :	**LL-0005**	Revision :	**A**	Revision Date :	**12/08/95**
Master # :	**K-SPC-00256-S-PS**	Date Identified :	**11/09/87**	Team / Log :	**LL / 5**

4. CO gas: exposure to CO gas may cause damage to the cardiovascular system, blood, lungs, and central nervous system. The IDLH level is 50 ppm.

This catastrophic accident could result in loss of life, loss of the shuttle vehicle, and major damage to the VAB, and would severely impact the United States Space Shuttle Program.

ENGINEERING / SAFETY REQUIREMENTS :

1. Friction

1a. GP-1098, Training/Personnel Certification, prior to the start of a hazardous operation, each participating organization shall ensure that all employees assigned to the operation are properly trained, certified (if applicable), equipped, and briefed. Non-certified personnel may participate as trainees provided a certified operator is in attendance for each function.

1b. NHB 5300.4, Safety Training and Certification, the contractor shall provide training and certification for personnel who are to be involved in hazardous operations and activities. Proficiency demonstrations of training, to the degree feasible, are required for hazardous operations.

OMRSD File V B47SG0.122, provides for visual inspection of RSRM segments tang and clevis field joints unpainted metal surfaces for contamination. No visible contamination is allowed.

1c. NSS/GO -1740.9, Personnel Certification, only certified (licensed) and trained operators shall be authorized to use/operate cranes. Training program shall be established and made available.

KMI 6430.4, Licensing of KSC Facility Crane Operators, operators must be examined and licensed according to the provisions of this KMI before operating a KSC owned installed crane. The requirements are for training, examination, and licensing/relicensing program.

1d. GP-1098 - SRM Segment Transfer on Transporter, requires pre-operational and operational inspection be accomplished and all discrepancies corrected prior to transporter move.

1e. NHB 5300.4, SRM&Q Provisions for the Space Shuttle Program, Safety Training, states that the contractor shall provide training and certification for personnel who are to be involved in hazardous operations and activities.

KMI 6730.3, Licensing of KSC Special or Heavy Equipment Operations, operators must be examined and licensed according to the provisions of the document before operating KSC owned/leased special or heavy equipment. These requirements include the establishing and conducting training, examination, and licensing/relicensing programs for such operators.

2. High Heat

2a. GP-1098, Launch Complex 39 Area, smoking is not permitted inside the MLPs, MDD area or within the perimeter fenced areas of the VAB, RPSF or OSF. Matches, lighters, or other flame producing devices are prohibited in any area containing propellants/explosives and within the perimeter fenced area of the VAB, RPSF, OPF, Pads OSF and MDD area.

Welding and Cutting Operations, a welding and cutting permit will be required for all open flame, welding and cutting operations performed in an area not previously designated as a welding shop or welding area. No welding or open flame will be permitted within an area/bay/facility containing explosives, RSRMs or SRBs without a determination made that the task to be accomplished could not be done by mechanical means or possibly delayed until such hazardous materials are removed. A permit shall be issued.

2b. KSC-STD-E-0002 - Hazardous Locations and Classifications, all electrical energized equipment within 10 feet of open grain of solid propellants shall meet the requirements of this standard for Class 1, Div. 1, Group D.

SW-E-0002 - Electrical Equipment Design, electrical equipment required to be hazard proofed shall be in accordance with KSC-STD-E-0002. Deviation/waiver 29 is applicable to para. 3.4.4.2A.

2c. NSS/GO 1740.9 - Overhead Crane, Electrical, states that wiring and safety devices shall be in accordance with National Fire Protection Association (NFPA) National Electrical Code. The electrical system shall be designed fail-safe to ensure that a failure of any component will not cause the crane to operate faster than commanded.

2d. NSTS 07700 VL X, GSE Fail-Safe, requires all ground support equipment to be designed to sustain a failure without causing loss of vehicle systems or loss of personnel capability.

2e. KHB 1710.2, VL 1, Accumulation of combustible waste is prohibited within the VAB high bay areas, low bay test cells, SRB processing and subassembly areas, and facilities where flight hardware/payloads are processed.

2f. GP-1098, IC Engine Controls, no passenger vehicles will be allowed in the VAB. All vehicles with a government license plate, except those transporting explosives or flammable/combustible liquids, are permitted entry into the VAB without a permit. Safety will randomly audit the numbers and types of vehicles in the VAB. No vehicle or heavy equipment will cross a safety barricade, open a security fence or enter a controlled area without coordination with VAB Safety.

2g. SW-E-0002, Fluid System Design, requires hoses and tubing to be proof tested at 1.5 times the Maximum Allowable Working Pressure (MAWP) by hydrostat or 1.25 times the MAWP for pneumatic testing. Relief valves shall be set to crack at not more than 110% of the MAWP and shall reseat on decreasing pressure ì• at a point above the MAWP. 80K51846 provides specification for flexhoses handling and installation.

NSS/GO 1740.9, Overhead Cranes Inspection, daily and periodic safety inspections shall be performed on all cranes and crane accessories. This inspection will include visual inspections of lines, tanks, valves, drain pumps, gear casings and other components of fluid systems for deterioration and leaks.

2h. To ensure compliance with program requirements, safety assessments are performed on all required GSE per NSTS 22254 and 22206.

3. IMPACT

3a. SW-E-0002, GSE General Design Requirements, provides criteria for minimum safety factors and structural materials to be used for platforms. When no applicable standard is listed, a minimum factor of safety of two to yield is used.

KSC-DE-512-SM, Design Engineering of GSE used at KSC, access equipment provides design standards for safe working loads for access platform/work stands. Platform/stands are designed for a safety factor of two and tested at 125% of the safe working load.

3b. SW-E-0002, GSE, General Design Requirements, provides material requirement standards and minimum safety factor criteria of two when no applicable standard is given.

3c. NSS/GO 1740.9, Safety Standard for Lifting Devices and Equipment, requires daily visual inspection of slings prior to first use, periodic NDT and load test, required design load safety factors, and provide general operations and maintenance guidelines.

3d. NSS/GO 1740.9, Safety Standard for Lifting Devices and Equipment Overhead Crane Operational Task, requires testing of crane controls in various speeds, hoisting, bridge and trolly movement, limit switches, holding brakes, and E-stop switches prior to critical lifts.

3e. NSS/GO 1740.9, Safety Standard for Lifting Devices and Equipment, Hooks, requires periodic maintenance, tests and inspections to verify hook integrity.

3f. NSS/GO 1740.9, Safety Standard for Lifting Devices and Equipment, Overhead Cranes and Mechanical, cranes used for critical lifts must have two means of braking, each capable of stopping and holding the rated load.

3g. NSS/GO 1740.9, Safety Standard for Lifting Devices and Equipment, Maintenance, periodic maintenance, tests, and inspection of the wire rope is required to evaluate the need for replacement of the wire rope.

3h. NSS/GO 1740.9, Safety Standard for Lifting Devices and Equipment, requires operational testing and inspection for hydraset unit hydraulic leaks and piston rod deterioration. Frequently used hydrasets will be tested annually.

3i. NSS/GO 1740.9, Safety Standard for Lifting Devices and Equipment, provides the requirements for testing, inspection, maintenance, operation of hydraset, and operator certification.

3j. NSS/GO 1740.9, Safety Standard for Lifting Devices and Equipment, Overhead Crane, Personnel Certification, provides

requirements for certifying KSC operators.

KMI 6430.4, Examination/Licensing of KSC Crane Operators, provides policy and procedures for licensing and requires periodic inspections of all KSC crane operators.

3k. GP-1098, KSC Ground Safety Plan, SRB Hoist and Stack, requires stacking operation to be terminated due to lost communication and not to commence until communications are restored.

3l. GP-1098, KSC Ground Safety Plan, Work on Elevated Structures, requires all hand tools and equipment to be tethered where the possibility of a falling object might cause injury to personnel or damage to flight hardware. SPI SP-002(2)KV, Tools/Hardware tethering requirements.

3m. OSHA (29 CFR 1910) Section 1910.23, Guarding Floor and Wall Openings and Holes, states that standard toe boards shall be provided for every open sided floor, platform and railing four (4) feet or more above adjacent floor or ground level.

3n. SPI SF-509(8)KV, Area Safety Inspections, Responsibilities and Handling, ensures that good housekeeping practices are established and maintained in all facilities. VAB door configuration will be configured so as not to cause any impact on other operations.

3o. GP-1098, KSC Ground Safety Plan, SRB Hoist and Stack Operations, Safety Instructions, requires impact covers be in place on forward end of segment when in the VAB except during Daily Launch Operations (DLO). Highbay will be cleared of non-essential personnel.

3p. GP-1098, KSC Ground Safety Plan, SRB Hoist and Stack Operations, Safety Instructions, states that a safety representative be present for full time coverage during SRB stacking operations and area clears will be established and maintained per VAB Hazardous Control Matrix B..

4. Static/Electrical Discharge:

4a. KHB 1710.2, KSC Safety Practices Handbook Section 10, Overloading, states that electrical circuit overloading is extremely dangerous and will not be permitted at anytime. All electrical systems will be equipped with fuses, circuit breakers or other accepted means to prevent accidental or intentional overloading.

4b. NSS/GO 1740.9, Overhead Crane, Electrical, requires wiring and safety devices be in accordance with National Fire Protection Association (NFPA) National Electric Code. Hard wire conductors cable carriers and electrical enclosures are required. Electrical system shall be designed fail-safe to ensure component failure will not cause crane speed to operate faster than commanded.

4c. Equipment maintence requirements are established per design drawing requirements and/or vendor requirements.

4d. NHB 5300.4, Para. 1D200, states that the contractor shall provide training and certification for personnel who are to be involved in hazardous operations and activities.

4e. KHB 1710.2, VL 2, SFOP32, Control of Hazardous Energy (Lockout/Tagout Program), states that each employee involved in servicing and maintenance of equipment shall be provided a personal lockout device. Only this employee may remove his lockout device except during an emergency.

4f. GP-1098, Section 2, requires personnel participation in hazardous operations to be certified for specific tasking.

4g. GP-1098, VL 2, SFOP 25, provides list of proper plastic sheet material/tapes. Appendix I, VL 1, list plastic films which are approved for use in all KSC flight hardware processing facilities.

4h. GP-1098, Adverse Weather Policy, provides adverse weather and lightning protection advisory service. During adverse weather Phase 2 Lightning Warning, VAB high bay doors are required to be closed.

4i. GP-1098, Para. 2.10, Humidity and Electro-Static Control, relative humidity in the operational area will be determined and recorded prior to the start and during operations involving exposed solid propellant,open flammable/cumbustible fluid systems and category A EEDs (when the Faraday cap is removed or firing circuits to EEDs are exposed). Electro static scanning, not to exceed one hour intervals, shall be performed during the operation anytime (1) additional personnel,equipment or hardware are

Hazard # :	**LL-0005**	Revision :	**A**	Revision Date :	**12/08/95**
Master # :	**K-SPC-00256-S-PS**	Date Identified :	**11/09/87**	Team / Log :	**LL / 5**

introduced into the immediate area, (2) the RH goes lower, or (3) the handling of non-conductive materials is required. Exposed grain operations will cease anytime a potential of 350 volts or greater is measured on the segment case, propellant surface or any personnel or equipment within five feet of the open propellant. An RH of 50% requires bonding and grounding measures be verified. All stacking operations will cease when RH reaches 10%.

4j. KSC-DE-K12-SM, Design Engineering for GSE used at KSC, provides recommended practices and procedures on ground and applicable requirements and documentation lists.

KSC-STD-E-0012A, KSC Standard for Bonding/Grounding, states bonding and grounding practices for minimizing static electricity must be followed in all areas of KSC where highly flammable or explosive material may be located.

S000002, File 1, TOPS Preparation Handbook, Section II, requires all TOPS be technically accurate in compliance with contractor program and specific requirements compatible with all applicable source data in related procedures.

4k. GP-1098, Para. 2.29.1, Pneumatic Tools, states that pneumatic tools used in explosive, propellant related areas must be fitted with a conductive air supply hose or facility ground. Supply hoses shall be regularly tested to verify continuity.

5. Reactions

5a. NHB 5300.4, SRM&Q Provisions of the Space Shuttle Program, Para. 1D200, requires personnel be trained and certified for required tasks.

5b. S000002, File I Section 2, requires all TOPS be technically accurate in compliance with contractural program and specific requirements; compatible with all applicable source data and related procedures.

5c. CFR29, Standard 1917.28(F)(3), Hazardous Communications, provides procedures/guidelines to ensure each container of hazardous chemicals leaving the workplace be labeled and tagged. Employees may use signs, placards, process sheets, batch tickets, or operating procedures in lieu of affixing labels. Labels will not be defaced or removed on incoming containers. Labels will be written in English. Numerous additional conditions are also listed in documents.

5d. NHB 5300.4, SRM&Q Provisions of the Space Shuttle Program, requires technicians be trained and certified for required tasks.

5e. S000002, File I, TOPS Preparation Handbook, Section II, requires all TOPS be technically accurate in compliance with contractural program and specific requirements; compatible with all source data and related procedures. OMRSD File V B09GEN.010, Material Preparation & Application, requires verification of shelf life, formulation, mixing, surface preparation, application, cure, and physical properties of all material used.

OMRSD REQUIREMENTS :

File V, B47GEN.060 - Propellant Surface Protection. RSRM propellant surfaces shall be protected against falling objects and environmental conditions during receiving, storage, and processing except as required for inspection and processing.

File V, B47SG0.122 - RSRM Field Joint Inspection. Visually inspect RSRM segments tang and clevis field joints unpainted metal surfaces for contamination. No visible contamination is allowed.

File V, B47SG0.520 - Clevis J-Joint Non-Bonding Surface Inspection. Visually inspect the RSRM segment clevis end (for the forward center, the aft center, and the aft segments) non-sealing surface (outboard of the J-Joint Bonding area) for contamination. No visible contamination is allowed.

File VI, B/L 246B, G20GHANM0.001 - Hydraset Load Test Verification. Verify Annual Load Test. (H72-0828-11)

File VI, B/L 246B, G20GHANM0.011 - Hydraset Leakage/Operational Test. Verify leakage integrity with a 50% self-induced load. (H72-0828-11)

File VI, B/L 389, GVBFCRVC0.002 - 250-Ton Bridge Crane No. 1 Brake Test. Perform a brake load test of two (2) holding brakes to provide assurance that each brake independently holds the rated load on the 250-ton bridge crane #1 and 25-ton aux. hoist.

File VI, B/L 389, GVDFCRVC0.002 - 250-Ton Bridge Crane No. 2 Brake Test. Perform a brake load test of two (2) holding

Hazard # :	**LL-0005**	Revision :	**A**	Revision Date :	**12/08/95**
Master # :	**K-SPC-00256-S-PS**	Date Identified :	**11/09/87**	Team / Log :	**LL / 5**

brakes to provide assurance that each brake independently holds the rated load on the 250-ton bridge crane #2 and 25-ton aux. hoist.

File VI, B/L 389, G20FCRVC4.001 - 325 Ton Main Hoist Operational Test. Perform a brake load test of the two (2) holding brakes to provide assurance that each brake independently holds the rated load on the 325-ton Bridge Crane #1 main hoist.

File VI, B/L 389, G20FCRVC5.001 - 350-Ton Bridge Crane #2 Main Hoist Operational Test. Perform a brake load test of the two (2) holding brakes to provide assurance that each brake independently holds the rated load on the 325-ton Bridge Crane #2 main hoist.

LAUNCH COMMIT CRITERIA :

None.

DETAILED ELIMINATION / CONTROL / ACCEPTED RISK RATIONALE :

Over the past decade, numerous analyses have been performed on the SRM operations in the VAB. From these analyses, KSC has implemented many additional preventative and protective measures in the VAB:

1) 250-Ton Crane Replacement and Enhancements -- 325-ton cranes were installed and replaced the 250-ton cranes. There are no Criticality Category 1 or 2 items identified with the cranes. The 250-ton cranes remain in-place as a back-up system to the 325-ton cranes. Modifications and enhancements of the control system for the two VAB 250-ton cranes reduced the number of Criticality Category 1 items from 31 to 22 per crane.

2) Fire Protection -- During the initial upgrades to process Solid Rocket Motors (SRM's) in the VAB, all occupied areas were provided with automatic sprinkler protection. Additionally, egress stairwells were sealed. The fire alarm system is currently being upgraded with a computerizeds state of the art system.

3) VAB Housing Policy -- Reduction of personnel and support functions housed in the VAB is being accomplished by implementation of KSC-DF-3669, "Vehicle Assembly Building Housing Abatement Plan". Personnel housed in the towers are minimized and restricted to the tenth floor and below to facilitate emergency evacuation. All personnel subject to the hazard of processing solid rocket motors in the VAB have been advised of this Abatement Plan in accordance with the requirements of Occupational Safety and Health Administration (OSH) 29 Code of Federal Regulations (CFR) 1960.30 "Abatement of Unsafe or Unhealthful Working Conditions and NHB 2710.1 "Safety and Health Handbook". Any request to house additional personnel/functions within the VAB must be approved by the KSC Director, Safety and Reliability.

4) Explosive Handling -- Stringent operational safety requirements are enforced during the processing, installation, and checkout of explosives. Requirements include, but are not limited to: established personnel limits and control areas for each explosive operation; use of faraday caps and shorting plugs to protect electro-explosive devices and firing circuits: power on/off stray voltage checks; and use of personnel grounding devices, Radio Frequency (RF) silence, and controlled switching when firing circuits are being electrically connected/disconnected.

5) Humidity and Electrostatic Controls -- Processing of SRM's is not permitted when Relative Humidity (RH) is 10% or below. Relative humidity is determined/recorded prior to the start and every four hours during operations involving exposed solid propellant or category A electro explosive devices when Faraday cap is removed and firing circuits exposed. When RH is less than 50% but greater than 30%, bonding and grounding is verified, and electrostatic scanning of personnel and non-conductive materials are performed at intervals not to exceed one hour to ensure voltages not greater than 350V are present. When RH is less than 30% but greater than 10%, electrostatic scanning intervals are increased to ten minutes if propellant is exposed and thirty minutes if the propellant is covered. Operations cease anytime a reading of 350V or greater is read within five feet of exposed propellant.

6) SRM Stacking Policy -- SRM segment handling from transfer aisle into high bays is limited to second and third shifts (where Shuttle program schedules allow). SRB stacking on a weekday first shift can be performed if the NASA Operations Director or Launch Director and Safety Director concurrence is obtained. This policy significantly reduced personnel exposure (KSC Center Director letter dated May 3, 1992; implemented by OMI B5303).

7) VAB Door Policy -- This policy requires opening the high bay upper vertical door panels in the same high bay containing SRM segment(s) and the ground level horizontal doors on the opposite side of the building and equal amount (or slightly more) to create a "chimney effect." (Recommended in KSC-DF-441, "SRM/VAB Inadvertent Ignition Effect Study.") The door configuration policy is specified by GP-1098, "KSC Ground Operations Safety Plan."

Hazard # : **LL-0005**	Revision : **A**	Revision Date :	**12/08/95**
Master # : **K-SPC-00256-S-PS**	Date Identified : **11/09/87**	Team / Log :	**LL / 5**

8) VAB Dual Operations Policy -- Multiple operations, hazardous or non-hazardous, shall not be performed within the VAB during hazardous operations involving significant loss potential or high energy (involving large clear areas) unless they meet the following: (1) the operations can be safely and quickly terminated; (2) personnel performing the operations are provided a route of rapid egress in the event of emergency; and, (3) emergency vehicles have ready access to an emergency without proceeding through other operations cleared/controlled areas.

Crane operations involving the 175-ton or a second 325/250-ton crane are not permitted when lifting an Orbiter or an SRM segment to/from the transfer aisle and high bay. Crane operations involving a second 325/250-ton crane (or both 325/250-ton cranes) are not permitted during Orbiter breakover or when lifting an SRM forward assembly to/from the transfer aisle and high bay. Also, tank entry, fire protection outages, and Operations and Maintenance (O&M) requiring personnel above the ET checkout cells or roof are not scheduled during these periods without prior approval of Safety to ensure safety evacuation of personnel.

Major hardware moves (i.e., crawler transporter, Orbiter, etc.) and other operations requiring opening the VAB doors are carefully evaluated for impact on other operations within the VAB. Concerns addressed include restrictions to personnel egress; loss of RF silence; and the effects of high wind velocities within the building that are not always predictable due to the changing exterior wind speed, velocity, and the chimney effect that results from the building size and door configuration.

VAB crane operations involving nonhazardous/noncritical equipment (no pyrotechnics, propellants, pressurized vessels, etc.) and O&M activities are permitted outside the control area during ET lifts or when supporting the Orbiter or SRM if the crane is static and the Orbiter or SRM is within five (5) feet of the transfer aisle floor, with prior notice to Safety.

9) KSC Smoking Policy -- Smoking is prohibited inside the VAB facility and within the perimeter fenced area. Matches, lighters, and other flame producing devices are also prohibited. Smoking in unauthorized areas results in suspension or dismissal. (GP-1098, "KSC Ground Operations Safety Plan" and KMI 1216.1 "Smoke-Free Workplace.")

10) Fire Inspections -- The VAB is designated a high risk facility. All areas are inspected quarterly which is the highest inspection frequency used for KSC facilities.

11) On-Site Safety Monitoring -- Hazardous operations with the potential for personnel injury/exposure or major equipment/facility damage require a safety professional to monitor the operation either full time or part time.

12) Welding and Cutting Operational Controls -- Welding and cutting permits are required for all open flame, welding, and cutting operations performed in areas not previously designated as welding shops or welding areas. The Base Operations Contract (BOC) Fire Services Inspector is contacted on all welding and cutting operations conducted outside authorized welding shops. Fire Services Inspectors, welders/apprentices, and other agencies (SPC Safety and USBI Safety) who are authorized to issue permits or perform welding must be familiar with and trained to the guidance provided in OSHA 1910.252, "Welding and Cutting Processes" and KHB 1710.2B, "KSC Safety Practices Handbook," SFOP-23.

Fire watches are established whenever cutting or welding is performed in locations requiring a permit. Fire watch personnel are required to be trained and familiar with the safety precautions in OSHA 1910.52 and KHB 1710.2B, SFOP-23. Fire extinguishing equipment is readily available and the fire watch is trained in its use. Attention is given to where the slag, sparks, and globules fall.

Permitted locations of welding and cutting are not changed or altered unless a new permit is issued. Requests for permits are required to be submitted at least 24 hours prior to start of work. Duration time of a permit does not exceed 5 days.

No welding or open flame is permitted within a VAB area of high bay containing explosives or SRM's without a determination made that the task to be accomplished could not be done by mechanical means or possibly delayed until the explosives or SRM's are removed. This determination is made by members of Safety, Fire Services, Project Engineering, and the VAB Site Manager. If this determination board certifies the task must be accomplished by open flame and while explosives or SRM's are present, additional controls (as appropriate) are established by the determination board to protect the explosives or SRM's from the open flame process. Welding/Open flame permits are issued by Safety with the concurrence of the determination board and the welding contractor.

13) VAB Access Training -- Before personnel are cleared to work in the VAB and receive a badge to gain entry, they are required to complete safety training which familiarizes them with the hazards associated with operations, facility layout, and emergency evacuation routes. (GP-1098 requirement.)

Hazard # :	**LL-0005**	Revision :	**A**	Revision Date :	**12/08/95**
Master # :	**K-SPC-00256-S-PS**	Date Identified :	**11/09/87**	Team / Log :	**LL / 5**

14) Operational Procedures/Additional Controls -- All hazardous procedures used in the VAB are reviewed and approved by Safety and walkdowns are conducted as part of the pre-operational checkout for all major hazardous operations. Emergency evacuation drills are conducted in the VAB a minimum of once a year on each shift. The drills are evaluated by the KSC Emergency Egress Training Advisory Group.

Routine Operations and Maintenance Instructions (OMI's) and Preventive Maintenance Instructions (PMI's) are conducted on all VAB handling equipment. Operations and Maintenance Requirements Specification Document requirements for preventive maintenance of VAB handling equipment are incorporated and verified in the appropriate OMI's and PMI's.

Impact-absorbing covers have been developed to protect the segments from overhead drop hazards. All personnel performing vehicle processing are thoroughly trained and certified. All emergency egress stairwells where toxic gases could penetrate occupied areas have been sealed. Provisions for rapidly shutting down all air handling system inlets within 2500 feet of the VAB have been put in place. A paging and area warning system has been installed throughout the high bay areas.

Specific controls to reduce the risks as pertains to the sources/causes are listed below:

1. Friction - Rigid inspection and cleaning controls are followed. The 325/250-Ton Crane is raised/lowered at slow or fine speed when lifting/moving segments within 10 feet of structures or critical hardware. Grain covers protect from objects falling into and scraping grain.

1a. OM B5303, Task 2, provides procedures for spherical bearing azimuth and height adjustment for RSRB holdown support post alignment. These sightings and alignment settings are verified by QC inspection and recorded on data sheets.

1b. OM B5303, Task 07, provides procedures for bare metal exposure limits for surface cleaning and cleaning of Tang/Clevis areas prior to mating operations to ensure freedom of contamination.

1c. OMIs Q3521/ Q3008, Special instructions, requires 325/250-ton hydraset/crane operators to be fully trained/certified and have current license in their possession prior to operating crane.

1d. Non credible event to cause inadvertent ignition because of the following rational: OMI M3164, Pre-operation set-up requires all operators be certified and ground observers familiar with operations. Provides instructions for daily and once per flow checks to verify mechanical condition of the transporter prior to operation. Ground observers are present during all vehicle operations and communicate visual observation of transporter's operation to the operator. Transporter is operated at crawl speed (2 MPH) in the VAB and if the steering system should fail, the Transporter can be stopped without damaging an SRM. Appendix Z, Emergency Instructions, provides for transporter shutdown.

1e. Non credible event to cause inadvertent ignition because of the following rational: OMI M3164, Section II, requires supervision to verify all transporter operators are certified and licensed to operate equipment. Transporter is operated at crawl speed (2 MPH) in the VAB, should the operator make an operating error there is sufficient time to recover. Additionally, ground observers communicate visual observations to the operator that prevent impact with objects.

2. High Heat - There is a policy against open flame - no lighters, matches, open flame, or spark-producing devices. Smoking is allowed in designated areas only. There is adequate fire extinguishing equipment. Welding/cutting operations require burn permits. Hazard proof circuitry/equipment is permitted within ten feet or above open grain. A paging and area warning system is provided and can be remotely operated.

2a. SPI-SF-506(8)K, requires a burn permit for any open flame, including welding and cutting, operations within LC-39 areas not designated as a welding shop or welding area. GP1098 prohibits matches, lighters, or other flame producing devices within the VAB perimeter fence. KMI 1216.1, Smoke Free Work Place prohibits smoking within the perimeter fence.

2b. SW-E-0002 para 3.4.4.2A, hazard proofing, deviation/waiver 29, requires GSE and electrical equipment to be hazard proofed in accordance with KSC-STD-E-0002 Standard for Class 1, Division 1, Group D hazardous locations.

2c. OMIs Q3521/Q3008, Operation Instructions, requires crane non-flight and flight operational checks. These operational procedures include current limit checks, motor, generator, and metadyne checks and a complete start-up and check out of the hoist, bridge, and trolley systems prior to lift operations. Appendix Z provides for crane operator emergency instructions to shut down all crane operations, as required.

Hazard # :	**LL-0005**	Revision :	**A**	Revision Date :	**12/08/95**
Master # :	**K-SPC-00256-S-PS**	Date Identified :	**11/09/87**	Team / Log :	**LL / 5**

2d. All electrical GSE have a safety and reliability analysis assessment to ensure compliance with program requirements with safety controls incorporated into appropriate OMIs.

2e. OM B5303, Section II, requires pre-ops check to verify facility housekeeping, ignition sources removed, and control of combustible waste in VAB high bay areas.

2f. OMI M3164, Transporter engine compartment is equipped with a fire detection/suppresion system. Instructions are provided for operational, daily and/or daily checks to verify no fuel or hydraulic leaks and that fire system is charged and operational. Transporter is not operated if fire system is not operational. Ground observers are present during all Vehicle Operations and communicate visual observations of the transporter operation to the operator.

2g. OMI M6150, Section IV, requires monthly maintenance inspections on lines, valves, fittings, jacks and steering system. Fire Department is notified to standby when SRB live segments are transported. OMRSD 80K51846B Flexhose Installation, requires hoses be hydrostatic or pneumatic tested prior to installation. OMIs Q3521/Q3008, Pre-ops setup for the 325/250 ton cranes provides walkdown procedures for signs of damage and leaks prior to any critical lifts.

OM B5303, Task 33, provides procedures for hydraset checkout and connection of hook prior to critical lift. This inspection satisfies OMRSD File VI G20GHANMO.001, Verification of Periodic Load Test.

2h. All GSE have individual safety and relability assessments to ensure compliance with program requirements. Safety controls are incorporated into appropiate OMI's.

3. Impact - All cranes and hoists are load-tested annually and pre-tested before each operation. The 325/250 ton cranes have appropriate design safety factors and meet industry standards as a minimum. The single failure points/hazards on the 250-Ton Crane are addressed in hazard report LL-0002. Monthly crane inspections are made and annual NDT tests are made on the hooks and lifting beams. All tools and personnel must be tethered when working above four feet to meet OSHA requirements. Crane operators are certified, licensed, and must have an annual physical to meet requirements. This helps to prevent any human reliability problems. Strict communication and observer control is exercised. Positive area control into VAB and training are required for all personnel to ensure egress routes are known. Grain covers are provided to reduce impact from falling objects.

3a. Platforms are designed to appropiate load requirements and are proofed tested prior to use. OMI Q6152 provides for monthly, semi-annual, annual & bi-annual maintenance on the extensible platforms and auxiliary hoist operated platforms in the VAB.

3b. Pallets are designed to appropiate load requirements and are proof tested prior to use. OMIs B2151 and B6035, provides instructions for the inspection, prevenative maintence and valication of proof load testing for the transportation/storage pallets and vertical stands. OMRSD 79K25989, SRM pallets and adapter sets, provide instructions for proof loading pallets and requires visual inspection for cracked welds and signs of deformation. SRM pallets were strengthened for heavier design load per TCTI RTF042-001-01. Forward and center segment pallets were proofloaded to 437,500 lbs. Aft segment pallets were proofloaded to 456,250 lbs. Critical welds were inspected by NDT methods.

3c. Lifting beams are designed to appropiate load requirements and include a 5:1 ultimate safety factor. OMI B5303 requires verification of validation test of lifting beam, critical weld inspection, and console certification to satisfy OMRSD File VI requirements. OMI B6246 performs semiannual and annual maintenance, tests, inspections and load tests, per operations instructions.

3d. OMIs Q3521/Q3008, Operation Instruction, provides procedures for flight operational checks prior to use including trolley and bridge functional tests to ensure proper speed/direction and voltages.

3e. OMIs Q6152/Q6003, Section IV, provides instructions for periodic maintenance and testing of crane hooks on a monthly, quarterly, semi and annual basis. OMIs Q3521/Q3008, Operation Instructions, requires operational checks be performed prior to hook use.

3f. OMI B5303, Section II, requires verification of crane brake pre-ops checks and current proofload certification. Eliminated by design with redundant motor and load braking system. Each system is capable of holding rated load. OMIs Q6152/Q6003, Operation Instructions requires monthly, semiannual maintenance tests and annual brake test.

3g. OMIs Q6152/Q6003, Operation Instructions, requires periodic maintenance and testing to ensure rope integrity. Annual load

test of crane verifies rope condition. OMIs Q3521/Q3008, Pre-ops Instructions, provides pre-operational and operational checks of crane prior to use.

3h. OMI B5303, Task 33, requires pre-ops check of hydraset to verify leakage integrity with a 50% self induced load to satisfy OMRSD File VI requirements, G20GHANM0.011. (Reference SAA09FT08.028)

3i. OMI V6G99 provides requirements for maintenance calibration, load test and validation of hydraset. OMI B5303, Task 33, provides instruction for hydraset checkout and verifies validation prior to use to satisfy OMRSD File VI requirements, G20GHANM0.001, verification of proof load test.

3j. OMIs Q3521/Q3008, Special Instructions, requires ground observers and E-STOP operators to be in full view of the load at all times and each can stop crane movement at anytime.

3k. OMIs Q3521/Q3008, Special Instructions, requires crane operator to confirm any change in control status, during crane operations, with the ground controller.

3l. OMI B5303, Safety Requirements, require tethering of equipment/tools when working on elevated structures when a dropped article could damage hardware or cause injury to personnel.

3m. OMI B5303, Section II, requires a pre-ops walkdown inspection on all platforms, walkways and each discrepancy resolved prior to flow operations. Toeboards are installed on VAB platforms in accordance with OSHA standards.

3n. OMI B5303, Safety Requirements and Pre-Ops Setup, requires verification facility housekeeping is complete, combustible materials removed and all passage ways clear. VAB doors will be configured to reduce possibility of blowing objects if environmental conditions dictate in accordance with GP1098 VAB door configuration requirements.

3o. OMI B5303, Task 37, requires installation of protective covers over SRM segments if open grain exist for any duration. This satisfies OMRSD File V requirements, B47GEN.060, Propellant Surface Protection.

3p. OMI B5303, Task 5, 11, requires major clears for operational areas during hazardous RSRM stacking/processing operations in VAB. These clears preclude work above segments during periods of exposed/unprotected propellant.

4. Static/Electrical Discharge - Stringent bonding/grounding requirements are implemented and enforced during processing RSRMs. Grounding straps are used. Verification checks are performed prior to mating/stacking and during other RSRM operations. Personnel are directed to wear proper clothing, i.e. non-static type coveralls. Use of improper materials is prohibited. ESD scans are made for each operation that exposes grain. Working on live circuits and/or motor repairs are prohibited within 10 feet of exposed grain. Stray AC/DC voltage checks on crane hook are performed prior to crane operations.

4a. All electrical GSE have a Safety and Reliability Analysis Assessment. Safety and Reliability personnel participate in design reviews. These assessments and reviews ensure compliance with program requirements. Safety controls when required are identified and incorporated into OMIs.

4b. OMIs Q3521/Q3008, Operation Instructions, requires current limit checks 325/250 ton crane motors and electrical controls prior to all major lifting operations. Electrical overloads are not permitted at any time

OMI B5303, Task 22 & 33 requires crane hook voltage checks (AC/DC) and resistance measurements prior to Handling Beam/Hydraset hook up.

OMIs Q6152/Q6003, Operation Instructions, require quarterly/semiannual/annual visual inspections for faulty wiring, corrosion and overall wiring deterioration. Hook resistance and stray voltage checks are conducted on a ì• semiannual basis.

4c. OMI I2001 provides procedures for the testing of electrical equipment. Electrical equipment is maintained in accordance with vendor instructions and engineering drawings.

OMI I2003 provides instructions for the inspection, maintence, testing, and validation of grounding systems.

4d. OM B5307, Operation Instructions, provide for installation checks, pre-power electrical continuity checks verified by resistance measurements. Flight hardware connections to GSE require a quality buy-off.

Hazard # :	**LL-0005**	Revision :	**A**	Revision Date :	**12/08/95**
Master # :	**K-SPC-00256-S-PS**	Date Identified :	**11/09/87**	Team / Log :	**LL / 5**

4e. OMI M3125 establishes uniform facility operations and maintenance instructions to tag out/lock out electrical systems while work is being performed.

4f. OMIs B5303/B5307/B5304, Personnel Requirements Section, calls out specific certified personnel for required tasks and all work is inspected and verified by QC personnel.

4g. OMI B5303, Special Instructions, requires the use of conductive tape and velostat sheeting (conductive plastic) in direct contact with propellant. Materials used in and around RSRM processing areas must meet strigent flame retardant and anti-static requirements and be approved for use by KSC NASA Safety. Static producing or non-conductive plastic sheeting is prohibited in the VAB High Bays.

4h. OMI B5303, Pre-Ops Setup 2, Verifies that VAB lighting and grounding systems are validated. Emergency Instructions for severe weather conditions (lighting) are outlined in Appendix Z.

4i. OMI B5303, Special Requirements, provides for the monitoring of the humidity around exposed grain and requirements for electrostatic scanning of segments.

4j. OM B5311, Task 24, provides requirements for bonding and grounding practices for minimizing static electricity and requires resistance checks to facility ground.

OMs B5303, B5304,and B5307 require verification that grounding and bonding connections made are less thasn 10 ohms resistance by recording resistance measurements made with a DVOM.

4k. OM B5303 Tasks 29, 30, 31 requires joint leak check GSE equipment and air load tool cart be grounded to facility ground and verified by resistance checks.

5. Reactions - Use of materials and proper chemical mixtures are controlled by OMIs and monitored by quality control and safety. Use of wrong materials or mislabeling is unlikely to occur due to strict screening by technicians and quality control. Lead/Quality Engineering monitoring deter human error and use of improper procedures.

5a. OMI B5311, Operation Instructions, provide in-depth mixing instruction. Most materials come in pre-measured quantities. QC provides inspections throughout procedures.

5b. OMI B5311, Operation Instructions, requires scale calibration verified, Quality sign-off for mixing procedures and cure samples prepared.

5c. OMI B5311, Operation Instructions, requires verification of chemical type, lot no., mix type, etc. by Quality Control and technicians.

5d. OMI B5311, Operation Instructions, provide procedures for monitoring materials through the mixing process.

5e. OMI B5311, Operation Instructions, procedures for use of proper material and proper chemical mixtures are controlled by precise procedural outlines monitored by Quality Control and Safety Representatives.

SUMMARY ACCEPTANCE RATIONALE :

Acceptance of the risk associated with inadvertent ignition of RSRMs/SRBs in the VAB is based upon a combination of design and procedural considerations. The RSRMs/SRBs themselves are designed to be insensitive to many potential ignition sources (i.e. propellant auto ignition temperature of 665 degree F). Ground Support Equipment used to process SRMs is also designed to minimize the opportunity for occurrence of hazardous events in accordance with KSC-DE-512-SM, "Guide for Design Engineering of Ground Support Equipment for use at KSC", SW-E-0002, "Space Shuttle Program Ground Support Equipment", and NSS/GO-1740.9, "NASA Safety Standard for Lifting Devices and Equipment".

Procedural controls implemented to reduce the opportunity for inadvertent ignition of RSRMs/SRBs are extensive. Important examples include:
1) Personnel - restrictions on personnel access and housing; smoking controls, evacuation rehearsals; improved training and certification/licensing programs; use of approved clothing in control areas. 2) Facility - sealing of stairwells; installation of automatic sprinklers and emergency lighting in occupied areas; control/use of permits for electrical appliances, welding/cutting, and IC engines; restrictions on the accumulation of combustible waste; control of VAB door configuration, 3) SRM/SRB protection - use of covers for exposed propellant; toeboard required on platforms; tethering of tools; speed restrictions on the

Hazard # :	**LL-0005**	Revision :	**A**	Revision Date :	**12/08/95**
Master # :	**K-SPC-00256-S-PS**	Date Identified :	**11/09/87**	Team / Log :	**LL / 5**

SRM Transporter and VAB cranes when moving/lifting segments; stationing of observers who can stop operation if an unsafe condition occurs, 4) Tests - inspection and operational test of lifting equipment prior to use; annual load testing of all cranes and hoists; strict adherence to bonding/grounding standards; performance of voltage checks on crane hooks.

OMI / TPS / WAD VERIFICATION :

1. Friction:

OM B5303, Stacking and Alignment Ops.
OMI Q3008, Operating Instructions for 175/250-Ton Bridge Crane.
OMI Q3521, Operating Instructions for 325-Ton Bridge Crane.
OMI M3164, Operation of SRM Transporter.
OMI M6150, Maintenance of SRM Transporter.
OMI S9909, VAB Emergency Procedures Document.
OMI Q6152, Maintenance Instructions for the High Bay Extensible Work Platform. OMI Q6003, Maintenance Instructions for 175/250-Ton Bridge Cranes.
OMI Q6339, Maintenance Instructions for 325-Ton Bridge Cranes.
OMI V6G99, PM, Calibration, Load Test, and Validation of Hydraset.
OM B5304, SRB System Mate and Closeout.
OM B5307, SRB Cable Installation and Checkout.
OM B5311, SRB Standard Technical Practices.
OMI M3125, Lockout/Tagout of Facility O&M Systems & Equipment.
OMI B5305, Aft Booster Assembly Electrical Buildup.
OMI I2001, Electrical Standard Test Procedures.
OMI I2003, Testing Grounding and Lighting Protection.

ESRs :

None

SAA REFERENCES :

SAA09FY120-001 - 325-Ton Bridge Cranes at the Vehicle Assembly Building, High Bay 1, 2, 3, and 4.
SAA09FY12-005 - 250-Ton Bridge Cranes at the Vehicle Assembly Building, High Bays 1, 2, 3 and 4.
SAA09FT08-028 - 250-Ton Hydraset Linear Positioning Instruments for use at the Vehicle Assembly Building.
SAA09FT08-022 - Solid Rocket Motor (SRM) Transporter.

FMEA/CIL REFERENCES :

None.

BACKGROUND :

The initial residual hazard IHA-019 was identified by NASA early in the Shuttle Program, and the risk was documented and accepted by the KSC Center Director in November, 1979. Before and since that time, numerous special studies, reports, and risk assessments were prepared to analyze the VAB design, processing of the SRMs, the Stacking / Mating operations of the Orbiter, ET, and SRBs as well as the inspection / test / checkout prior to going to pad for launch.

The following list of references of study depict rationale for continued processing of SRMs/SRBs in the VAB.

1. SPC/LSOC VAB Risk Assessment
2. Gunn Committee 1980 Report
3. ASAP Review, 1980
4. VAB Residual Hazards Associated with Thiokol Study, TWR 11389, Nov. 16, 1979
5. Presentation (Consequences of Accidental Ignition/Burning of SRM Segments in VAB), July 2, 1979
6. Solid Rocket Motor/VAB Inadvertent Ignition Effects Study, Sept. 1981
7. Solid Rocket Motor/VAB Inadvertent Ignition Effects Study, Executive Summary KSC-DF-502, Sept. 1981
8. VAB Integrated Hazard Analysis Report, March 1982

RF concern was not addressed in this Hazard Report. Rationale being that the electric field strength propellant safe level is 200,000 volts/meter. The VAB RF ambient field intensity (Test Report RCA 620-5043) was measured at four locations near the top of the Solid Rocket Boosters with signals showing a maximum field intensity of 20.4 volts / meter (v/m).

Hazard # :	**LL-0005**	Revision :	**A**	Revision Date :	**12/08/95**
Master # :	**K-SPC-00256-S-PS**	Date Identified :	**11/09/87**	Team / Log :	**LL / 5**

The potential for metal to metal contact within the SRM joint during a demate operation, resulting in SRM inadvertent ignition, was addressed by Program Management and SR & QA prior to STS-26R stacking. A recommended procedure for segment disassembly using the hydraset was proposed to minimize the hazard, since the disassembly fixture is unavailable. Bounce potential is dependent upon the demate release loads. Based on the interference fit taper of the inner clevis leg, out of round conditions, and damping forces of O-ring seals (joint friction and joint clocking), the separation loads are nominally less than 20K pounds. By increasing the load on the hydraset in steps and waiting for motion by reading the temposonic gauges (reading vertical movement), then reducing the load to maintain separation rate, the potential for bounce and the potential for metal-to-metal contact is extremely low. In addition, a limit of 25K pounds has been imposed for the hydraset operation. If the joint becomes more than 0.250 inches cocked with the 25K pound load, the operation will stop for review of the exact circumstances and mate signature.

INTERFACES :

None.

STATUS OF OPEN WORK :

None.

REMARKS :

9/13/88 - Status changed to closed.

2/17/89 - Updated to reflect hazard report number RT-ENG-1027 (LL-0002), which covers the 250-ton crane critical items.

4/13/93 - Periodic update performed. This hazard report was previously submitted in CR 50414D. Level III CCB approval date: 3/21/89; SSRP presentation date: 3/29/89; Level II/I PRCB approval date: 4/11/89.

1/19/94 - Documentation used for additional information:
National Fire Protection Association
Occupational Safety and Health Administration
Life Safety Code (NFPA)

10/03/96 - Periodic update performed. Changed Hazard Report Number IHA-019 to LL-0005. Changed team/log RT/2 to LL/5. Noncredible causes were eliminated. Additional information added to all fields.

Hazard # : **LL-0012** Revision : **C** Revision Date : **06/29/98**
Master # : **K-SPC-00000-I-CR** Date Identified : **04/06/95** Team / Log : **LL / 12**

Title : **PERSONNEL REQUIRED TO PERFORM WORK WHILE BENEATH SUSPENDED LOADS DURING FLIGHT HARDWARE PROCESSING AT KSC/DFRF/CLS/VAFB**

CONFIGURATION DATA

Responsible Organization : **SFOC** Mission Effectivity : **26+**

CR : **SSP-68095R1** Mission Phase : **GROUND PROCESSING**

Location/Station Sets : **17, 19, 20, 22, 23, 24, 29, 31, 32, 33, 77, 89, BD**

Baselines : **036.00, 237.00, 242.00, 259.00, 330.00, 380.00, 389.00, 400.15, 422.00, 423.00, 505.21, 510.00**

Program Model Numbers : **C70-0870, H70-0822, H70-1379, H70-1379-01, H70-1502, H70-1503, H70-1528, H70-1529, H70-8392, H72-1200, H72-1390, H72-1394, K60-0382, K60-0528, K60-0531, K60-0533, K60-0534, K60-0562, K60-0563, K60-0602, K61-0168, K61-0254, K61-2062**

Flow Segments : **LRR, MULTI, OPF, PAD, PLOAD, RDF, RPSF, SSMEPF, VABM, VABO, VABS, VABT**

HAZARDS ANALYSIS DATA

Report Status : **CLOSED**
Closure Class : **CONTROLLED**

Worst Case Cause : **1**
Severity : **CATASTROPHIC**
Likelihood : **IMPROBABLE**

Hazard Type : **INDUSTRIAL**

Prepared By : **USA**
Mail Code : **USK-291**

Analysis Type : **OPERATING & SUPPORT**

RISK MATRIX

Hazard severity and likelihood of occurrence with controls in place
(see associated cause #)

LIKELIHOOD	MARGINAL	CRITICAL	CATASTR.
PROBABLE			
INFREQUENT			
REMOTE			
IMPROBABLE			1

SEVERITY LEVELS

- CONTROLLED
- ACCEPTED RISK
- UNACCEPTABLE

APPROVALS :		DATE :	DATE APPROVED :	
Safety Engineer :	**Mark Gross**	**09/16/98**	CCB :	**10/13/98**
Contractor System / Design Engineer :	**Ed Thompson**	**09/18/98**	SSRP :	
Contractor Safety Manager (1) :	**D. R. Clarkson**	**09/18/98**	PRCB :	
Contractor Safety Manager (2) :	**A. M. Stevens**	**09/28/98**		
NASA System Engineer :	**N/A**			
NASA Safety Manager (1) :	**N/A**			
NASA Safety Manager (2) :	**N/A**			

Hazard # :	**LL-0012**	Revision :	**C**	Revision Date :	**06/29/98**
Master # :	**K-SPC-00000-I-CR**	Date Identified :	**04/06/95**	Team / Log :	**LL / 12**

HAZARD DESCRIPTION :

Current procedures for flight hardware processing at KSC, DFRF, CLS and VAFB require personnel to perform work while beneath suspended loads during certain lifting operations. The following lifting devices are used to perform operations which require personnel to perform work while beneath suspended loads:

1) VAB 250-Ton Bridge Crane-External Tank (ET) processing and storage per OMIs T5002.012, T5002.015 and S0033; Inspection and preparation of SRM/SRB components for mate per OMI B5303; Preparations for Orbiter mate to ET per OMI S0004; Orbiter demate from ET per OMI S0030, SRB destacking per OMI B5141; and P/L canister rotation per OMI E5010.

2) VAB 325-Ton Overhead Bridge Crane-External tank processing and storage per OMIs, T5002.012, T5002.015 and, S0033; inspection and preparation of SRM/SRB components for mate per OMI B5303; preparations for Orbiter mate to ET per OMI S0004; Orbiter demate from ET per OMI S0030; SRB destacking per OMI B5141; and payload canister rotation per OMI E5010.

3) VAB 175-Ton Bridge Crane-External tank processing and storage per OMIs T5002.012, T5002.015, and S0033; Preparations for Orbiter mate to ET per OMI S0004; Orbiter demate from ET per OMI S0030; and P/L canister rotation per OMI E5010.

4) RPSF 200-Ton Bridge Crane-SRB processing including Aft Booster assembly and preparations for transport to VAB per OMI B5309; and AFT Booster disassembly per OMI B5143.

5) MDD 55-Ton Hoists (KSC/DFRF) - Post-landing deservicing, Orbiter / SCA mate/demate, and Orbiter towing operations per OMIs S5001, S5022, S5041 and V5112.

6) OPF 30-Ton Bridge Cranes (HBs 1, 2 and 3) - Installation / Removal of horizontal payload into/from P/L canister per OMI E5006. Installation/Removal of Payload Bay Door Lightweight Strongbacks per OMI V9023.001.

7) Pad A/B Clean Access Platform (CAP) Hoists-Orbiter payload bay operations per OMI V5136.

8) 250-Ton Linkbelt HC-268 Mobile Truck Crane-Orbiter/SCA mate at Contingency Landing Sites per OMI S5044; and Payload handling at a CLS per OMI E5532.

9) 800-Ton Demag TC 4000 Mobile Truck Crane-Orbiter/SCA mate at Contingency Landing Sites per OMI S5044; and Payload handling at a CLS per OMI E5532.

10) VAB 10-Ton Bridge Cranes in Checkout Cells 1and 2 to support contingency SSME operation, Preventive Maintenance/SSME Rotating Sling Maintenance per OMI V6G21 and Space Shuttle Main Engine (SSME) Rotation, SSME Move Vertical to Vertical, and Rotating Sling Functional Checkout per OMI V5087.

11) 90-Ton Hoist (Pad A) - Payload canister handling at the Pad per OMI E5026.

12) 90-Ton Hoist (Pad B) - Payload canister handling at the Pad per OMI E5026.

13) OPF Orbiter Zero Gravity (G) Simulator Hoists - Contingency operations to inspect, adjust, and repair the Orbiter payload bay doors per OMI V9023.

14) OLF 50 Ton Hoists (Palmdale) - Orbiter/SCA Mate/Demate per OMIs S5045 & S5046.

15) 40-Ton Link Belt HSP-8040 Mobile Crane - SSME Rotating Sling preventive maintenance and SSME maintenance per OMI V6G21.

16) 35-Ton Pettibone Mobile Crane - SSME Rotating Sling preventive maintenance and SSME maintenance per OMI V6G21.

17) 140-Ton Manitowoc Mobile Crane - SSME Rotating Sling preventive maintenance and SSME maintenance per OMI V6G21. SSME/GSE handling operations per OMI V5082.

18) SSMEPF 10-Ton Bridge Cranes in SSME Work Stand Area-SSME rotating, 1G Simulator functional checkout / test, engine loading / unloading, low pressure oxidizer duct installation / removal, and SSME main combustion chamber removal/installation per OMIs V5087, V5E02, V5E28, and V6G21.

Hazard # :	**LL-0012**	Revision :	**C**	Revision Date :	**06/29/98**
Master # :	**K-SPC-00000-I-CR**	Date Identified :	**04/06/95**	Team / Log :	**LL / 12**

19) SSMEPF 15-Ton Bridge Cranes in SSME Work Stand Area-SSME rotating, V6G21.

HAZARD CAUSE:

1. (CONTROLLED/CATASTROPHIC/IMPROBABLE) - Failure of lifting devices and/or associated equipment which could result in dropping a load while personnel are performing work underneath.

HAZARD EFFECTS :

Personnel injury and/or loss of life.

ENGINEERING / SAFETY REQUIREMENTS :

A. Occupational Safety and Health Administration (OSHA), 29 CFR 1910, Occupational Safety and Health Standards, 1989:

a. 1910.179(n)(3)(vi), Overhead and Gantry Cranes, "The employer shall require that the operator avoid carrying loads over people."

b. 1910.180(h)(3)(vi), Crawler Locomotive and Truck Cranes, "The operator should avoid carrying loads over people."

B. American Standards Institute (ANSI):

a. ANSI B30.2-1990, 2-3.2.3(e), Overhead and Gantry Cranes, "The operator should avoid carrying loads over people."

b. ANSI B30.5-1989, 5-3.2.1.4(e), Mobile and Locomotive Cranes, "The operator should avoid carrying loads over people."

C. NSS/GO-1740.9B, NASA Safety Standard for Lifting Devices and Equipment, November 1991:

a. Chapter 2, Overhead Cranes, 206(21), "Personnel shall not be located under suspended or moving loads unless the operation adheres to the OSHA-approved NASA Alternate Standard for Suspended Load Operations."

b. Chapter 3, Mobile Cranes and Derricks, 306(22), personnel shall not be located under suspended loads unless the operation adheres to the OSHA-approved NASA Alternate Standard for Suspended Load Operations."

c. Appendix B - "NASA Alternate Safety Standard for Suspended Load Operations."

D. GSOP 5400, USA Ground Safety Operating Procedures, 2.36, "A load will not be lifted, suspended, or transported over personnel."

E. KHB 1710.2C Kennedy Space Center Safety Practices Handbook.
a. Annex G 1.d "Suspended Load Operation Analysis/Approval (SLOAA)."

OMRSD REQUIREMENTS :

OMRSD TITLE
===== =====
File VI, Vol. 1, B/L 237.00, G24GHAMA0.084 - MDD Hoist Rated Load Test (DFRC) - Performs an annual rated load test and verifies the load is held without drift. Performs an operational test of the hoists and verifies the emergency brake controls operate as designed.

File VI, Vol. 1, B/L 237.00, G08FHAMJ0.081 - 50-Ton Hoist Rated Load Test - Verifies the annual rated load test on the 50-Ton forward, aft port, and aft starboard hoists.

File VI, Vol. 1, B/L 242.00, GABFHAEA0.001 - Simulator Assembly Rated Load Test - Performs an annual rated load test and verifies the load is held without drift.

File VI, Vol. 1, B/L 242.00, GAWFHAEA0.001 - Simulator Assembly Rated Load Test - Performs an annual rated load test and

verifies the load is held without drift.

File VI, Vol. 1, B/L 242.00, GGDFHAEA0.001 - Simulator Assembly Rated Load Test - Performs an annual rated load test and verifies the load is held without drift.

File VI, Vol. 1, B/L 510.00, GHEGKRM00.001, - 140T Mobile Crane Rated Load Test - Verifies the rated load certification is valid prior to use.

File VI, Vol.. 1, B/L 330.00, G99GKRLA0.002 - 40 Ton Mobile Crane Rated Load Test - Performs an annual rated load test and operational test. Verifies the rated load is held without drift and winch brakes independently holds the rated load.

File VI, Vol. 1, B/L 330.00, G99GKRLB0.001 - 250 Ton Mobile Crane Rated Load Test - Performs an annual rated load test and verifies the load is held without drift.

File VI, Vol. 1, B/L 380.00, GABFCRA0.010 - 30 Ton Bridge Crane Brake Test HB-1 - Performs a brake load test to assure the band brake, mechanical load brake, and electric brake independently holds the rated load.

File VI, Vol. 1, B/L 380.00, GAWFCRFA0.010 - 30 Ton Bridge Crane Brake Test HB-2 - Performs a brake load test to assure the band brake, mechanical load brake, and electric brake independently holds the rated load.

File VI, Vol. 1, B/L 380.00, GGDFCRFN0.002 - 30 Ton Bridge Crane Load Path Test HB-3 - Performs a crane mechanical load path test for the north and south load paths to assure that each load path independently holds the rated load.

File VI, Vol. 1, B/L 389.00, G20FCRVC4.001 - 325-T #1 Main hoist Operational Test - Performs an annual operational test of the main hoist and verifies the east and west brake independently holds the rated load.

File VI, Vol. 1, B/L 389.00, G20FCRVC4.002 - 325/50-T #1 Aux Hoist Operational Test - Performs annual operational test of the 50-Ton Auxiliary Hoist and verifies the east and west brakes independently hold the rated load.

File VI, Vol. 1, B/L 389.00, G20FCRVC5.001 - 325-T #2 Main Hoist Operational Test - Performs an annual operational test of the main hoist and verifies the east and west brakes independently hold the rated load.

File VI, Vol. 1, B/L 389.00, G20FCRVC5.002 - 325/50-T #2 Aux Hoist Operational Test - Performs an annual operational test of the 50-Ton Auxiliary Hoist and verifies the east and west brakes independently hold the rated load.

File VI, Vol. 1, B/L 389.00, GTAFCRVD0.002 - 175-Ton ridge Crane Brake Test - Performs an annual brake load test to assure the holding brakes independently hold the rated load.

File VI, Vol. 1, B/L 389.00, GTAFCRVD0.026 - 175-Ton Bridge Crane Ops Test - Performs an annual operational test to verify the main hoist, auxiliary hoist, bridge, and trolley controls operate as designed.

File VI, Vol. 1, B/L 389.00, GTAFCRVD0.027 - 175 Ton Bridge Crane Ammeter S/O Point - Verifies the console ammeter switch-over point operates as designed.

File VI, Vol. 1, B/L 389.00, GVBFCRVC0.002 - 250-Ton Bridge Crane No. 1 Brake Test - Performs an annual test of the holding brakes to assure each brake independently holds the rated load.

File VI, Vol. 1, B/L 389.00, GVBFCRVC0.026 - 250-Ton Bridge Crane No. 1 Ops Test - Performs an annual operational test to verify the main hoist and main hoist swivel operate as designed.

File VI, Vol. 1, B/L 389.00, GVBFCRVC0.027 - 250-T Bridge Crane No. 1 S/O Point - Verifies the console ammeter switch-over point operates as designed.

File VI Vol. 1, B/L 389.00, GVBFCRVC0.029 - 250 Ton Crane No. 1 Bridge and Trolley Ops Test - performs an annual operational test of the bridge and trolley in all directions.

File VI, Vol.1, B/L 389.00, GVDFCRVC0.002 - 250-Ton Bridge Crane No. 2 Brake Test - Performs an annual test of the holding brakes to assure each brake independently holds the rated load.

Hazard # :	**LL-0012**	Revision :	**C**	Revision Date :	**06/29/98**
Master # :	**K-SPC-00000-I-CR**	Date Identified :	**04/06/95**	Team / Log :	**LL / 12**

File VI, Vol. 1, B/L 389.00, GVDFCRVC0.026 - 250-Ton Bridge Crane No. 2 Ops Test - performs an annual operational test to verify the main hoist swivel operates as designed.

File VI, Vol. 1, B/L 389.00, GVDFCRV0.027 - 250-T Bridge Crane No. 2 S/O Point - Verifies the console ammeter switch-over point operates as designed.

File VI, Vol. 1, B/L 389.00, GVDFCRVC0.029 - 250 Ton Crane No. 2 Bridge and Trolley Ops Test - Performs an annual operational test of the bridge and trolley in all directions.

File VI, Vol. 1, B/L 389.00, GVXFCRVA1.003 - 10-Ton Crane rated Load Test (Cell 1) - Performs an annual rated load test and verifies the rated load is held without drift. Verifies the motor brake and load brake independently holds the rated load.

File VI, Vol. 1, B/L 389.00, GVXFCRVA2.004 - 10-Ton Crane Rated Load Test (Cell 2) - Performs an annual rated load test and operational test. Verifies the rated load is held without drift and hoist down controls operate as designed.

File VI, Vol. 1, B/L 400.15, GBDFCRKA0.030 - 200-T Crane No. 1 (West) Load/Oper Test - Verifies the annual rated load test and operational test is current.

File VI, Vol. 1, B/L 400.15, GBDFCRKB0.031 - 200-T Crane No. 2 (East) Load/Oper Test - Verifies the annual rated load test and operational test is current.

File VI, Vol. 1, B/L 422.00, GRUFHTRA0.010 - Pad A 90-Ton Hoist Rated Load Test - Performs an annual rated load test and operational test. Verifies the rated load is held without drift and the band brake independently holds the rated load.

File VI, Vol. 1, B/L 422.00, GRWFHTRA0.005 - Pad B 90-Ton Hoist Rated Load Test - Performs an annual rated load test and operational test. Verifies the rated load is held without drift and the band brake independently holds the rated load.

File VI, Vol. 1, B/L 238.00, G17FHTD00.054 - MDD Hoist Rated Load Test (SLF) - Performs an annual rated load test and operational test. Verifies the rated load is held without drift and the emergency brake controls operate as designed.

File VI, Vol. 1, B/L 510.00, G99GKRG12.004 - 35 Ton Mobile Crane Rated Load Test - Performs an annual rated load test and operational test. Verifies the rated load is held without drift and verifies boom extends and retracts, outriggers extend and retract, and rated load rotates side to side about base.

File VI, Vol. 1, B/L 422.00, GRUFHRY0.005 - Pad A 10 Ton CAP Hoist Rated Load Test - performs a rated load test for the RSS 10 Ton Clean Access Hoists. Verifies the rated load is raised and held without drift.

File VI, Vol. 1, B/L 036.00, G29FHAB50.001 - SSMEPF 10 -Ton Crane Rated Load Test - Performs an annual rated load test and operational test. Verifies the rated load is held without drift and the motor brake and drum brake independently holds the rated load. Functional checkout of all controls in all modes produces expected results.

File VI, Vol. 1, B/L 036.00, G29FHAB60.001 - SSMEPF 15 -Ton Crane Rated Load Test - Performs an annual rated load test and operational test. Verifies the rated load is held without drift and the motor brake and drum brake independently holds the rated load. Functional checkout of all controls in all modes produces expected results.

LAUNCH COMMIT CRITERIA :

None.

DETAILED ELIMINATION / CONTROL / ACCEPTED RISK RATIONALE :

Possible procedure / design options have been investigated to determine if work can be accomplished without personnel working under a suspended load for each operation. Secondary support system (i.e., equipment designed to assume support of (catch) the load preventing injury to personnel should the hoist / crane fail) have been evaluated and used whenever possible. For those operations which require personnel to perform work beneath suspended loads, a KSC Suspended Load Operation Analysis has been processed and approved by SFOC and NASA management. Rationale for reducing the risk to personnel is presented in each of the analyses.

Each lifting device has been thoroughly analyzed in accordance with NSTS 22206, "Requirements for Preparation and Approval of Failure Modes and Effects Analysis (FMEA) and Critical Items List (CIL)" and NSTS 22254, "Methodology for Conduct of

Space Shuttle Program Hazard Analyses", and documented in a System Assurance Analysis (SAA). Each SAA includes a FMEA/CIL and hazard analysis. The FMEA/CIL identifies critical items within each system and their failure effects and presents rationale for accepting the risk of critical items based upon design information, failure history and operational controls. In addition, the hazard analysis ensures lifting devices meet applicable safety standards, identifies hazardous conditions which may be present and verifies appropriate controls are in place to reduce the risk to personnel. These in-depth system analyses of the lifting devices ensure that safety and operational personnel, as well as KSC management, are aware that all potential hazards have been identified and controls have been established to reduce the risk of working under a suspended load to an acceptable level.

NSS/GO-1740.9 establishes NASA's minimum safety requirements for the design, testing, inspection, personnel certification/recertification, maintenance, and use of overhead and gantry cranes (including top running monorail, underhung, and jib cranes), mobile cranes, derricks, hoists, and special hoist supported personnel lifting devices. It also addresses minimum requirements for the testing, inspection, and use of hydra-sets, hooks, and slings.

The NASA Alternate Safety Standard for Suspended Load Operations establishes NASA's minimum standards for working under suspended loads. This standard is an alternate to 29 CFR 1910.179(n)(3)(vi) and 29 CFR 1910.180 (h)(3)(vi).

The NSS/GO-1740.9 and the Alternate Standard require that:

1. Steps shall be taken to limit the number of personnel working under a load suspended from a crane / hoist. Only those essential personnel absolutely necessary to perform the operation will be allowed to work in the safety controlled area.

2. Steps shall be taken to ensure that personnel do not remain under the load any longer than necessary to complete the work.

3. Prior to the suspended load operation, a meeting with the crane/hoist operator(s), signal person(s), and the person(s) who will work under the load, and the person responsible for the task shall be held to plan and review the approved operational procedures that will be followed, including procedures for entering and leaving the safety controlled area.

4. Communications, (voice, radio, hard wired, or visual) between the operator(s), signal person(s), and the person(s) working under the load shall be maintained. Upon communication loss, operations shall stop immediately, personnel shall clear the hazardous area, and the load shall be safed. Operations shall not continue until communications are restored.

5. Personnel working beneath the load shall remain in continuous sight of the operator(s), and/or signal person(s).

6. A proofload test at 1.25 times the rated load and an operational test shall be performed on all new or extensively repaired, extensively modified, or altered cranes and hoists (1.10 times for mobile cranes).

7. Each crane shall undergo a rated load test and an operational test every four years. Critical cranes shall be load tested annually. Cranes used infrequently for critical lifts shall be load tested before the critical lift if it has been more than a year since the last test.

8. Daily and periodic inspections will be performed for all cranes. Cranes idle for more than one month shall be inspected prior to first use in accordance with NSS/GO-1740.9.

9. Daily inspections include: a check of functional operating and control mechanisms for maladjustments, excessive wear and contamination; a visual inspection of fluid system components for deterioration and leaks; and a visual inspection for the crane components (e.g., hook, ropes, etc.) for damage or excessive wear.

10. Periodic inspections per NSS/GO-1740.9 include inspections for: worn, cracked, deformed, corroded, or contaminated crane components (use of nondestructive evaluation to be utilized as needed or required by NSS/GO-1740.9); worn brake and clutch system components; and abnormal performance/malfunction of power plant(s), safety devices, load/other indicators, brakes, steering, and locking devices.

11. Lifting equipment shall be verified to be within valid load test certification prior to use per NSS/GO 1740.9.

12. Operational checks will be performed prior to lifting operations to assure proper control response in all modes.

13. Cranes are operated only by trained and certified operators per KMI 6430.4, Examination and Licensing of KSC Facility

Hazard # : **LL-0012**	Revision : **C**	Revision Date :	**06/29/98**
Master # : **K-SPC-00000-I-CR**	Date Identified : **04/06/95**	Team / Log :	**LL / 12**

Crane Operators, or KMI 6730.3, Examination and Licensing of KSC Special or Heavy Equipment Operators. Crane operators are required to carry a valid operators license with them at all times while operating a crane.

Those permanent operations listed below under Verification Methods are suspended load operations which cannot be eliminated by design changes. All have been closely examined and determined to be in compliance with the NASA Alternate Safety Standard.

SUMMARY ACCEPTANCE RATIONALE :

Possible procedure/design options have been investigated to determine if work can be accomplished without personnel working under a suspended load for each operation. Secondary support systems (i.e., equipment designed to assume support of (catch) the load preventing injury to personnel should the hoist/crane fail) have been evaluated and used whenever possible. For those operations which require personnel to perform work beneath suspended loads, a Suspended Load Operation Analysis/Approval Report has been processed and approved. Design changes have been implemented, where feasible, to eliminate or mitigate suspended load operations. The NASA Alternate Safety Standard for Suspended Load Operations establishes NASA's minimum standards for working under suspended loads. Those permanent suspended load operations which cannot be eliminated by design changes have been closely examined and determined to be in compliance with the NASA Alternate Safety Standard.

OMI / TPS / WAD VERIFICATION :

The following NASA Suspended Load Operation Analysis/Approval (SLOA/A) Reports have been approved for operations which require personnel to perform work beneath suspended loads. Each report contains a description of the suspended load task(s) and lists the supporting documents. The reports describe how the task(s) complies with the NASA Alternate Safety Standard for Suspended Load Operations.

SLOA/A #	OMI	DESCRIPTION
1991-001	S0004	Orbiter Mate to the External Tank
1991-002	S0030	Orbiter Demate from the External Tank
1991-003	S5022	Orbiter Mate to the Shuttle Carrier Aircraft (SCA) at Dryden Flight Research Center (DFRC)
1991-004	S5054	Orbiter Mate to the Shuttle Carrier Aircraft (SCA) at Contingency Landing Site
1991-005	S5001	Orbiter Demate at the Shuttle Landing Facility (SLF), KSC
1991-006	S5041	Orbiter Mate to the Shuttle Carrier Aircraft (SCA) at KSC
1991-007	S5045	Orbiter Mate to the Shuttle Carrier Aircraft (SCA) at the Rockwell Palmdale Facility
1991-008	V5112.007	Orbiter Towing Operations-Orbiter Processing Facility (OPF) to Mate/Demate Device (MDD)
	.008	-Vehicle Assembly Building (VAB) High Bay II to Mate/Demate Device (MDD)
	.009	-Mate/Demate Device (MDD) to Orbiter Processing Facility (OPF)
	.013	-Vehicle Assembly Building (VAB) Transfer Aisle to Mate/Demate Device (MDD)
	.014	-Mate/Demate Device (MDD) to Vehicle Assembly Building (VAB) High Bay II
	.015	-Mate/Demate Device (MDD) to Vehicle Assembly Building (VAB) Transfer Aisle

Hazard # : **LL-0012**	Revision : **C**	Revision Date :	**06/29/98**
Master # : **K-SPC-00000-I-CR**	Date Identified : **04/06/95**	Team / Log :	**LL / 12**

1991-009	B5141	Solid Rocket Booster (SRB) Destack Operations , VAB
1991-010	B5143	Aft Booster Disassembly Operations, RPSF
1991-011	B5303	Stacking and Alignment Operations, VAB
1991-012	B5309	Aft Booster Assembly Operations, RPSF
1991-013	T5002.015	External Tank (ET) Mate to External Tank Transporter
1991-015	T5002.012	External Tank (ET) Off-Load from the Transporter
1991-016	V5087	Space Shuttle Main Engine (SSME) Rotation, SSME Move Vertical to Vertical, and Rotating Sling Functional Checkout
1991-017	V5E02	SSME High Pressure Oxidizer Turbo Pump Removal/Installation
	V5E63	SSME Alternate High Pressure Oxidizer Turbo Pump Removal/Installation
1991-018	V5E28.001	Engine Powerhead/Nozzle Separation in the Vehicle Assembly Building (VAB) Engine Shop and SSMEPF
1991-019	V6G21	Preventive Maintenance/SSME Rotating Sling Maintenance
1991-020	V5136	Operate/Utilize the Clean Access Platform (CAP) at LC-39 (Pad A/B)
1991-021	E5010	Rotate the Payload Canister at the Vehicle Assembly Building (VAB)
1991-022	E5026	Hoisting and Lowering of Payload Canister at LC-39 Pad A/B
1991-023	E5005	Install/Remove Keel Covers, Guide Keel Trunnions Into Keel Latches, Attach MHC Shoes to MHC, Install MHC Shoes onto MHC Spindles, Installation of Spacehab Transfer Tunnel
1991-034	V9023.001	Operate, Inspect, Adjust and Repair the Orbiter Payload Bay Doors at the Orbiter Processing Facility (OPF)
1992-003	S5046	Orbiter Demate at the Orbiter Lifting Facility (OLF), Rockwell Palmdale Plant
1992-004	S0028	Orbiter Tow/Spot Into/Out of the Mate/Demate Device at the Shuttle Landing Facility (SLF), KSC
1993-005	S0004	Orbiter Mate to External Tank (ET) (325-Ton Crane)
1993-006	S0030	Orbiter Demate from the External tank (ET) (325-Ton Crane)
1993-007	B5141	Solid Rocket Booster Destack Operations, VAB (325-Ton Crane)
1993-008	B5303	Stacking and Alignment Operations, VAB (325-Ton Crane)
1993-009	T5002.015	External Tank (ET) Mate to External Tank Transporter (325-Ton Crane)
1993-010	T5002.012	External Tank (ET) Off-Load from the Transporter (325-Ton Crane)
1998-001	V9023.001	Payload Bay Door Lightweight Strongback Installation/Removal

ESRs :

ECP1221, K14022, K14593, K14594, K14595, K14596, K14597, K14598, K14599, K14600, K14601, K14602, K14603, MCR16608, MCR21013

Hazard # :	**LL-0012**	Revision :	**C**	Revision Date :	**06/29/98**
Master # :	**K-SPC-00000-I-CR**	Date Identified :	**04/06/95**	Team / Log :	**LL / 12**

SAA REFERENCES :

SAA	TITLE
SAA09FY12-005	250-Ton Bridge Crane, VAB
SAA09FY12-006	175-Ton Bridge Crane, VAB
SAA09FY112-002	200-Ton Bridge Crane RPSF
SAA09FY120-001	325-Ton Bridge Cranes at the VAB
SAA29OM01-001	Mate/Demate Device KSC/DFRF
SAA09FY091-001	30-Ton Bridge Cranes OPF HB-1 and 2
SAA09FY091-007	30-Ton Bridge Crane OPF HB-3
SAA09FTA3-001	Clean Access Platform Pads A
SAA09FT01-004	250-Ton HC-268 Truck Crane
SAA09FT01-006	Linkbelt 40 Ton Mobile Crane HSP 8040, KSC
SAA09FT01-009	250-Ton Pettibone Mobile Crane, LOA
SAA09FY121-002	10-Ton Bridge Crane VAB Cell, 1,2, and 4
SAA09FTA3-004	90-Ton Hoist, PAD A
SAA09FTB3-003	90-Ton Hoist, PAD B
SAA09FTP3-006	Horizontal Zero Gravity Simulator, OPF
SAA29CL01-025	Orbiter Lifting Frame, Palmdale
SAA09CR00-001	10 & 15-Ton Bridge Crane SSMEPF

FMEA/CIL REFERENCES :

SAA09CR00-001:

Critical Item Name	Qty	FMEA/CIL Number	Critical Failure Mode	Crit Cat
Load hold/halt drum brake	2	09CR00-001.001	Fails to engage	1R
Motor brake	2	09CR00-001.002	Fails to engage	1R
Programmable Logic Controller	2	09CR00-001.003	Unsolicited command.	1
Gearbox	2	09CR00-001.004	Gear disengagement	1R

SAA09FT01-004:

Critical Item Name	Qty	FMEA/CIL Number	Critical Failure Mode	Crit Cat
Bumper Jack Cylinder	1	09FT01-004.001	Piston head seal failure (internal leakage).	1R
Bumper Jack Cylinder		09FT01-004.002	Rod seal failure (external leakage).	1R
Front Bumper Jack Lock Valve		09FT01-004.003	Fails open (rod side).	1R
Front Bumper Jack Lock Valve	1	09FT01-004.004	Relieves prematurely.	1R
Lock valve	4	09FT01-004.005	Fails open (rod side).	1R
Lock valve		09FT01-004.006	Relieves prematurely.	1R
Outrigger Jack Cylinder Assembly	4	09FT01-004.007	Piston head seal failure (internal leakage).	1R
Outrigger Jack Cylinder Assembly		09FT01-004.008	Rod seal failure (external leakage).	1R

Hazard # : **LL-0012** Revision : **C** Revision Date : **06/29/98**
Master # : **K-SPC-00000-I-CR** Date Identified : **04/06/95** Team / Log : **LL / 12**

SAA09FT01-006:

Critical Item Name	Qty	FMEA/CIL Number	Critical Failure Mode	Crit Cat
Reduction Unit Assembly	1	09FT01-006.001	Gears disengage.	1
Winch Brake Assembly	1	09FT01-006.002	Brake slips or fails to engage.	1

SAA09FT01-009:

Critical Item Name	Qty	FMEA/CIL Number	Critical Failure Mode	Crit Cat
Pilot Check Valve	4	09FT01-009.001	Fails open.	1R
Winch Gear Case Assembly	1	09FT01-009.002	Gears disengage.	1
Crowd Control Valve	1	09FT01-009.004	Fails open.	1R
Outrigger Control Valve	4	09FT01-009.005	Fails open.	1R
Double Over Center Valve	1	09FT01-009.006	Fails open.	1R

SAA09FTA3-001:

Critical Item Name	Qty	FMEA/CIL Number	Critical Failure Mode	Crit Cat
Speed Reducer	2	09FTA3-001.001	Gear disengagement.	1R

SAA09FTA3-004:

Critical Item Name	Qty	FMEA/CIL Number	Critical Failure Mode	Crit Cat
Geared Coupling	1	09FTA3-004.001	Mechanical failure.	1R
Gear Box	1	09FTA3-004.002	Gear disengagement.	1R
Drum Band Brake Assembly	1	09FTA3-004.003	Fails to engage and hold.	1R

SAA09FTB3-003:

Critical Item Name	Qty	FMEA/CIL Number	Critical Failure Mode	Crit Cat
Gear Reducer	1	09FTB3-003.001	Gear disengagement.	1R
Band Brake Assembly	1	09FTB3-003.002	Brake slips of fails to set.	1R

SAA09FY091-001:

Critical Item Name	Qty	FMEA/CIL Number	Critical Failure Mode	Crit Cat
Speed Reducer (Main Hoist)	2	09FY091-001.001	Gear disengagement.	1R
Solenoid Actuated Band Brake	2	09FY091-001.002	Fails to engage.	1R

Hazard # :	**LL-0012**	Revision :	**C**	Revision Date :	**06/29/98**
Master # :	**K-SPC-00000-I-CR**	Date Identified :	**04/06/95**	Team / Log :	**LL / 12**

SAA09FY091-007:

Critical Item Name	Qty	FMEA/CIL Number	Critical Failure Mode	Crit Cat
Brake Wheel	2	09FY091-007.001	Key disengages.	1R
Brake	2	09FY091-007.002	Fails to engage.	1R
Coupling	2	09FY091-007.003	Key disengages	1R
LH Reducer	2	09FY091-007.004	Gear disengages.	1R
Coupling	2	09FY091-007.005	Key disengages.	1R
Coupling	2	09FY091-007.006	Key disengages.	1R
RH Reducer	2	09FY091-007.007	Gear disengages.	1R
Coupling	2	09FY091-007.008	Key disengages.	1R
Brake	2	09FY091-007.009	Fails to engage.	1R
Brake Wheel	2	09FY091-007.010	Key disengages.	1R

SAA09FY112-002:

Critical Item Name	Qty	FMEA/CIL Number	Critical Failure Mode	Crit Cat
Hoist Gear Case	1	09FY112-002.001	Gear disengagement.	1R
Emergency Drum Brake	3	09FY112-002.003	Fails to engage.	1R

SAA09FY12-005:

Critical Item Name	Qty	FMEA/CIL Number	Critical Failure Mode	Crit Cat
Motor - Generator Set, Main Hoist	2	09FY12-005.004	No output	1
Potentiometer	2	09FY12-005.022	Fail open.	1R
Motor - Main Hoist	4	09FY12-005.032	Open armature winding	1
Generator Field DC Input Controller	2	09FY12-005.079	High ouput (not inverted).	1R
Generator Field DC Input Controller	2	09FY12-005.080	High ouput (inverted).	1R
Generator Field DC Input Controller	2	09FY12-005.081	High ouput (not inverted).	1R
Generator Field DC Input Controller	2	09FY12-005.082	High ouput (inverted).	1R
Generator Field DC Input Controller	2	09FY12-005.083	High ouput (not inverted).	1R
Generator Field DC Input Controller	2	09FY12-005.084	High ouput (inverted).	1R
Potentiometer	2	09FY12-005.096	Fails open.	1R
Potentiometer	2	09FY12-005.097	Fail open.	1R
Relay, Main Hoist	2	09FY12-005.098	Fails deactivated	1

Relay	2	09FY12-005.099	N.O. contact fails open.	1
Relay, Main Hoist	2	09FY12-005.100	Fails deactivated.	1
Relay, Main Hoist	2	09FY12-005.101	N.O. contact fails open.	1
Relay, Main Hoist	2	09FY12-005.102	N.O. contact fails open.	1
Relay - Main Hoist	2	09FY12-005.103	N. C. contact fails open	1
Transformer	2	09FY12-005.104	Winding fails open or shorted.	1
Circuit Breaker	2	09FY12-005.105	Contact fails open.	1
Gear Train, Main Hoist	2	09FY12-005.112	Gear disengagement.	1R
Relay	2	09FY12-005.120	Fails deactivated (coil fails open).	1R
Relay	2	09FY12-005.121	N.C. contact fails closed.	1R
Relay	2	09FY12-005.122	Coil fails to deenergize.	1R
Relay	2	09FY12-005.123	N.O. contact fails closed.	1R
Rectifier	2	09FY12-005.124	Diode fails open/shorted.	1R
Relay	2	09FY12-005.125	N.O. contact fails closed.	1R
Relay	2	09FY12-005.126	N.O. contact fails closed.	1R
Relay	2	09FY12-005.127	Coil fails to deenergize.	1R
Relay	2	09FY12-005.128	N.O. contact fails closed.	1R
Rectifier	2	09FY12-005.129	Diode fails open/shorted.	1R
Relay	2	09FY12-005.130	N.O. contact fails closed.	1R
Relay	2	09FY12-005.131	Coil fails to deenergize.	1R
Relay	2	09FY12-005.132	N.O. Contact fails closed.	1R
Rectifier	2	09FY12-005.133	Diode fails open/shorted.	1R
Relay	2	09FY12-005.134	N.O. contact fails closed.	1R

SAA09FY12-006:

Critical Item Name	Qty	FMEA/CIL Number	Critical Failure Mode	Crit Cat
Motor - Generator Set, Main Hoist	1	09FY12-006.004	No ouput.	1
DC Motor, Main Hoist	2	09FY12-006.032	Open armature winding	1
Gear Train, Main Hoist	1	09FY12-006.091	Gear disengagement.	1R
Gear Train, Main Hoist	1	09FY12-006.092	Gear disengagement	1R
Flex Coupling, Main Hoist	1	09FY12-006.093	Disengages.	1R
Flex Coupling, Main Hoist	1	09FY12-006.094	Disengages.	1R

Hazard # :	**LL-0012**	Revision :	**C**	Revision Date :	**06/29/98**
Master # :	**K-SPC-00000-I-CR**	Date Identified :	**04/06/95**	Team / Log :	**LL / 12**

SAA09FY120-001:

Critical Item Name	Qty	FMEA/CIL Number	Critical Failure Mode	Crit Cat
Main Hoist Gear Reducer	2	09FY120-001.001	Gear disengages.	1R
Main Hoist Pinion Gear Coupling	2	09FY120-001.002	Key disengages.	1R
Main Hoist Brake Wheel	2	09FY120-001.003	Key disengages.	1R
Main Hoist Electric Brake	2	09FY120-001.004	Stuck mechanism, worn or glazed shoes.	1R
Main Hoist Pinion Gear	2	09FY120-001.005	Gear disengages.	1R
Main Hoist Drum Gear	2	09FY120-001.006	Gear disengages.	1R
Auxiliary Hoist Gear Reducer	2	09FY120-001.007	Gear disengages.	1R
Auxiliary Hoist Pinion Gear Coupling	2	09FY120-001.008	Key disengages.	1R
Auxiliary Hoist Brake Wheel	2	09FY120-001.009	Key disengages.	1R
Auxiliary Hoist Electric Brake	2	09FY120-001.010	Stuck mechanism, worn or glazed shoes.	1R
Auxiliary Hoist Pinion Gear	2	09FY120-001.011	Gear disengages.	1R
Auxiliary Hoist Drum Gear	2	09FY120-001.012	Gear disengages.	1R

SAA09FY121-002:

Critical Item Name	Qty	FMEA/CIL Number	Critical Failure Mode	Crit Cat
Hoist Gearbox Assembly	2	09FY121-002.001	Gear disengagement.	1
Motor Brake	2	09FY121-002.003	Fails to set.	1R
Hoist Gearbox (Load Brake)	2	09FY121-002.004	Fails to set.	1R

SAA29CL01-025:

Critical Item Name	Qty	FMEA/CIL Number	Critical Failure Mode	Crit Cat
Gear Reducer 1	3	29CL01-025.001	Fails to engage.	1R
Gear Reducer 2	3	29CL01-025.002	Fails to engage.	1R
Drum Brake	3	29CL01-025.003	Fails to engage.	1R

SAA29OM01-001:

Critical Item Name	Qty	FMEA/CIL Number	Critical Failure Mode	Crit Cat
Drum Speed Reducer	2	29OM01-001.001	Disengages.	1R
Emergency brake solenoid	2	29OM01-001.002	Coil fails open.	1R
Time Delay Relay and/or Contacts	2	29OM01-001.003	Fails open.	1R
Rectifier Network	2	29OM01-001.004	No ouput.	1R

Hazard # : **LL-0012**	Revision : **C**	Revision Date :	**06/29/98**
Master # : **K-SPC-00000-I-CR**	Date Identified : **04/06/95**	Team / Log :	**LL / 12**

Fuse 5A	2	29OM01-001.005	Fails open.	1R

BACKGROUND :

ECP1221 - Suspended Load Abatement modification and Bearing Retention System Change - Completed per CCBD S-1221-G on 09/22/93.

ESR K14022 - Crane/Hoist Design Discrepancies - Completed per CCBD E-K14022-G on 02/17/93.

ESR K14593 - Modify ET Forward Sling and ET Storage/Checkout Cells - Completed per CCBD SSP07788 on 05/21/96.

ESR K14594 - GSE Design Plan for Orbiter Radiator Removal and Installation Operation - Completed per CCBD SSP07788 on 05/21/96.

ESR K14595 - SRB Rotation, Processing, and Surge Facility (RPSF) Operations - Completed per CCBD SSP07788 on 05/21/96.

ESR K14596 - Stacking and Alignment Operations - Completed per CCBD SSP07788 on 05/21/96.

ESR K14597 - Aft Booster Assembly - Completed per CCBD SSP07788 on 05/21/96.

ESR K14598 - SPC Abatement Plan for OMIs V5001, V5041, V5042, and S5022 - Completed per CBD SSP07788 on 05/21/96.

ESR K14599 - Suspended Load Abatement for Orbiter/SCA Mate DFRF (CLS) - Disapproved per NASA SLOA/A SLO-KSC-1991-003 and 004.

ESR K14600 - Suspended Load Abatement for Orbiter/SCA Mate DFRF (SLS-1) - Disapproved per NASA SLOA/A SLO-KSC-1991-003 and 004.

ESR K14601 - SPC Abatement Plan for OMI V1101 and V2105 - Completed per CCBD KSOG-00283 on 05/21/96.

ESR K14602 - Modification of Gimbal Assembly of HPOTP for Suspended Loads - Completed per CCBD SSP07788 on 05/21/96.

ESR K14603 - Fabrication of HPOTP Dolly for Suspended Load Abatement - Completed per CCBD SSP07788 on 05/21/96.

MCR 16608 - Design Changes for OSHA Abatement - Completed per CCBD M-16608-G on 02/19/93.

MCR 21013 - Modification to the Support Fixture PLB Radiator, GSE Model H70-0651 and A70-0608 - Completed per CCBD M-21013 on 02/11/93.

INTERFACES :

None.

STATUS OF OPEN WORK :

None.

REMARKS :

6/22/88 - SSRP changed to Industrial. This HR was neither approved nor disapproved with CR 50404N, but left to KSC to control as an Industrial hazard. This hazard will be maintained in the KSC Hazard Data Base. Status changed to closed. "Damage to flight hardware" deleted from hazard effect data element.

2/17/89 - Added O-ring inspectoscope operation and references to cranes and OMIs used for Orbiter/SCA mate/demate at DFRF/KSC/CLS. Also added reference to hazard report RT-ENG-1027, which covers the 250-ton VAB crane single failure points.

01/14/92 - Added ESRs K14022, K14593, K14594, K14595, K14596, K14597, K14598, K14599, K14600, K14601, K14602, K14603.

Hazard # :	**LL-0012**	Revision :	**C**	Revision Date :	**06/29/98**
Master # :	**K-SPC-00000-I-CR**	Date Identified :	**04/06/95**	Team / Log :	**LL / 12**

12/04/92 - Added ESRs ECP 1221, MCR 16608, MCR 21013.

01/30/95 - Periodic update performed. Hazard closure classification changed to controlled. This hazard report previously approved by the KSC Level III CCB on 06/07/88.

10/17/97 - Hazard number changed from SPC-001-95 to LL-0012. Team/Log number changed from SPC/1 to LL/12. Administrative changes were made to the configuration and hazard analysis data. Added 40-Ton Link Belt Mobile Crane (B/L 330.00, 35-Ton Pettibone Mobile Crane (B/L 510.00), and 140-Ton Manitowoc Mobile Crane (B/L 510.00). Added closure of ESRs to Background field.

6/29/98 - Added 10 & 15 Ton Bridge Crane (B/L 036.00) at the SSMEPF. Hazard report previously approved by KSC Level III CCB on 1/13/98.

9/3/98 - Update performed as a result of crane usage changes in the VAB checkout cell 4 and SSME main assembly area. Hazard report previously approved by KSC Level III CCB on 08/06/98.