SAA09FTP3-006
OCTOBER 1990

SYSTEM ASSURANCE ANALYSIS
OF THE
HORIZONTAL ZERO GRAVITY SIMULATOR
FOR ORBITER PAYLOAD BAY DOORS AND RADIATORS
AT THE
ORBITER PROCESSING FACILITY
HIGH BAYS 1, 2, AND 3

Baseline Number: 242.00

PMN: C70-0870

WUC: 19FHAEA000
GDFHAEA000

SS: 19, GD

SYSTEM: CRITICAL

National Aeronautics and
Space Administration

John F. Kennedy Space Center

NASA

KSC FORM 16-12 (REV. 8/76)

NOTICE — When Government drawings, specifications, or other data are used for any purpose other than in connection with a definitely related Government procurement operation, the United States Government thereby incurs no responsibility nor obligation whatsoever; and the fact that the Government may have formulated, furnished, or in any way supplied the said drawings, specifications or other data is not to be regarded by implication or otherwise as in any manner licensing the holder or any other person or corporation, or conveying any rights or permission to manufacture, use, or sell any patented invention that may in any way be related thereto.

APPLICATION		PART NO.	MF
NEXT ASSY	USED ON		

REVISIONS			
SYM	DESCRIPTION	DATE	APPROVAL
New	This SAA Cancels and Supersedes SAA09FY093-010	7/31/91	M.K. Green

SUBMITTED BY: 10/9/90
P. CLUKEY LSOC 51-22
RELIABILITY ENGINEER

CONCURRENCE: 10/24/90
E. GLUSING LSOC 52-10
SAFETY ENGINEER

APPROVED: for G. Jacobs MSA MEA 10-25-9
G. JACOBS TV-MSD-14

CONCURRENCE: 10-24-90
W. SZCZEPANIK LSOC 17-92
DESIGN ENGINEER

APPROVED: 10/15/90
R. MATHEWS DM-MED-33

CONCURRENCE: 10-9-90
Robert B. Drescher LSOC MEA
R. DRESCHER LSOC 17-33
SYSTEM ENGINEER

APPROVED: 2/7/91
for J. JOYNER RT-ENG

UNLESS OTHERWISE SPECIFIED DIMENSIONS ARE IN INCHES TOLERANCES ON FRACTIONS DECIMALS ANGLES	ORIGINAL DATE OF DRAWING 10/90	SYSTEM ASSURANCE ANALYSIS OF THE HORIZONTAL ZERO GRAVITY SIMULATOR FOR THE PAYLOAD BAY DOORS AND RADIATORS AT THE ORBITER PROCESSING FACILITY HB-1,2,3 OMD BASELINE NO. 242.00	JOHN F. KENNEDY SPACE CENTER, NASA
MATERIAL	DRAFTSMAN / CHECKER		
	TRACER / CHECKER		
	ENGINEER CLUKEY / ENGINEER		
HEAT TREATMENT	SUBMITTED M. K. GREEN 7/31/91 RELIABILITY ENGR. SUPV.		KENNEDY SPACE CENTER FLORIDA
FINAL PROTECTIVE FINISH	APPROVED A. M. STEVENS 7/31/91 RELIABILITY ENGR. MGR.	SCALE / UNIT WT	DWG SIZE A / SAA09FTP3-006 / SHEET 1 OF 43

KSC FORM 21-2C (REV. 3/76)

TABLE OF CONTENTS

Section	Title	Page
1.0	SUMMARY OF FINDINGS AND RECOMMENDATIONS	4
1.1	System Criticality	4
1.2	Mechanical Critical Items	4
1.3	Electrical Critical Items	4
1.4	Critical LPS Control/Monitor Functions	4
1.5	Hazards Identified	4
1.6	Critical Flexhoses	4
1.7	Critical Orifices	4
1.8	Critical Filters	4
1.9	End-To-End Areas of Concern	5
1.10	Sneak Circuits Identified	5
1.11	Recommendations	5
1.12	Criticality Category 1R Items	5
2.0	FAILURE MODES AND EFFECTS ANALYSIS	5
2.1	System Baseline	5
2.2	Ground Rules/Definitions/Documentation	5
2.2.1	Ground Rules	5
2.2.1.1	Failure of Redundant Items and Redundant Item Screens	5
2.2.1.1.1	Failure of Redundant Items	5
2.2.1.1.2	Redundant Item Screens	6
2.2.2	Definitions of Criticality and Hazard Categories	6
2.2.2.1	Criticality Definitions and Categories	6
2.2.2.2	Hazard Definitions and Categories	7
2.2.3	Documentation List	8
2.3	System Description	10
2.3.1	Winch Assembly	11
2.3.1.1	Thern Model 484 Winch	11
2.3.1.2	Thern Disc Brake	11
2.3.2	Trolley and Rail Assembly	11
2.3.3	Counterweight Basket Assembly	11
2.4	Criticality Assessment	17
2.5	Mechanical FMEA Worksheets and Block Diagrams	20
2.6	Electrical FMEA Worksheets and Block Diagrams	26
2.7	Flexhose FMEA Worksheets	26
2.8	Orifice FMEA Worksheets	26
2.9	Filter FMEA Worksheets	26
3.0	CRITICAL ITEMS LIST (CIL)	26
3.1	Critical Hardware List (CHL)	26
3.2	Critical Items Sheets	26

TABLE OF CONTENTS (Continued)

Section	Title	Page
4.0	HAZARD ANALYSIS	31
5.0	SOFTWARE REVIEW	40
5.1	Application Set Control Logic Review	40
5.1.1	Prerequisite Control Logic Review	40
5.1.2	Reactive Control Logic Review	40
5.2	Ground Launch Sequencer Review	40
5.3	Launch Commit Criteria Review	40
5.4	LPS/CCMS Control Function Analysis	40
6.0	END-TO-END ANALYSIS	40
6.1	End-To-End System Summary	40
6.2	Areas of Concern	43
7.0	SNEAK CIRCUIT ANALYSIS	43
8.0	EMERGENCY SAFING ANALYSIS	43
9.0	CRITICALITY CATEGORY 1R ITEMS	43

LIST OF ILLUSTRATIONS

Figure	Title	Page
1	Horizontal Zero Gravity Simulator Mounted on Payload Bay Area Access Bridge	12
2	Horizontal Zero Gravity Simulator Mounted on Payload Bay Area Access Bridge	13
3	Worm Gear Winch Assembly, Model 484B, Thern, Inc	14
4	Trolley Assembly	15
5	Counterweight Basket Assembly	16
6	System Functional Block Diagram of the Horizontal Zero Gravity Simulator	18
7	Mechanical Power Flow Diagram for Horizontal Zero Gravity Simulator (Zero-"G" System)	22
8	End-To-End System Analysis Block Diagram for the Horizontal Zero Gravity Simulator in the OPF	42

1.0 SUMMARY OF FINDINGS AND RECOMMENDATIONS

1.1 SYSTEM CRITICALITY

The Horizontal Zero Gravity Simulator is assessed as critical. Failure of the system to maintain a counterbalancing weight for the Orbiter Payload Bay Doors or Forward Radiators or to support the C-Frame Assembly could cause loss (damage) of a vehicle system. See section 2.4 for additional information.

1.2 MECHANICAL CRITICAL ITEMS

There were twelve Category 2 mechanical Critical Items identified in the critical output functions identified in section 2.4 for this analysis, which are summarized below. See sections 2.5 and 3.0 for additional information.

Mechanical Critical Items

Ref Des/ Find No.	Nomenclature	Critical Failure Mode	Criticality Category
484B	Worm gear winch assembly (2 per simulator)	Gears Disengage	2
		Brake Disengages	2

1.3 ELECTRICAL CRITICAL ITEMS

There are no electrical components associated with this system.

1.4 CRITICAL LPS CONTROL/MONITOR FUNCTIONS

There are no LPS control/monitor functions associated with this system.

1.5 HAZARDS IDENTIFIED

No formal hazards were identified during this analysis. See paragraph 4.0 for additional information.

1.6 CRITICAL FLEXHOSES

There are no flexhoses associated with this system.

1.7 CRITICAL ORIFICES

There are no orifices associated with this system.

1.8 CRITICAL FILTERS

There are no filters associated with this system.

1.9 END-TO-END AREAS OF CONCERN

The following Areas of Concern with this system were identified.

The Thern winches in high bays 1 and 2 use a set screw to attach the wire rope to the drum in violation of NSS/GO 1740.9 section 4.2.5d. A variance is not required for this condition provided that at least four wraps of wire rope remain on the drum at all times and that the set screw is properly torqued. The Thern cargo winches have a swaged ball end on the wire rope that prevents the wire rope from slipping through the mounting hole. This modification to the zero-g winches would eliminate this concern.

1.10 SNEAK CIRCUITS IDENTIFIED

There was no Sneak Circuit Analysis performed on the critical output functions identified in section 2.4 for this system.

1.11 RECOMMENDATIONS

The risk associated with the Critical Items identified in section 3.0 should be accepted by management based on the acceptance rationale provided on the CIL Sheets.

1.12 CRITICALITY CATEGORY 1R ITEMS

Improper performance or loss of any function in this system will not result in loss of life or vehicle; therefore, no Criticality Category 1R Analysis is required. See section 9.0 for additional information.

2.0 FAILURE MODES AND EFFECTS ANALYSIS

2.1 SYSTEM BASELINE

This system is baselined for STS by 79K09579, "KSC STS/Cargo Identification List for Facilities, Systems, and Equipment by Baseline Number," dated 09/11/90. The OMD Baseline Number is 242.00.

2.2 GROUND RULES/DEFINITIONS/DOCUMENTATION

2.2.1 GROUND RULES. This analysis has been developed in accordance with NSTS 22206, Rev. C, "Requirements for Preparation and Approval of Failure Modes and Effects Analysis (FMEA) and Critical Items List (CIL)."

2.2.1.1 <u>Failure of Redundant Items and Redundant Item Screens</u>.

2.2.1.1.1 Failure of Redundant Items. The combined effect of failure for two like and/or unlike redundant items which could result in loss of life/vehicle will be analyzed. Failure of redundant items with possible Criticality Category 1 effects will be classified as 1R items. Failures within the system

power and controls which could cause loss of either one of the redundant hardware items will be listed as the cause(s) for the failure of the redundant hardware items. Requirements for periodic validation of these 1R items will be invoked through the OMRS File VI. See section 9.0 for additional information.

2.2.1.1.2 Redundant Item Screens. Identified 1R items will be evaluated in section 9.0 in accordance with the redundancy screens described below. The Redundancy Screens are:

Screen A - The redundant item is capable of being checked and verified during normal ground operations.

Screen B - Loss of the redundant item is readily detectable by the ground crew. (This screen is not applicable to standby redundancy.)

Screen C - Loss of all redundant items cannot result from a single credible cause, such as contamination.

2.2.2 DEFINITIONS OF CRITICALITY AND HAZARD CATEGORIES. The following criticality and hazard categories were used throughout this analysis.

2.2.2.1 Criticality Definitions and Categories. Criticality definitions and categories are defined as follows:

Category	Definitions
1	A single failure that could cause loss of life or vehicle.
1R	A single failure that when coupled with the failure of a like or unlike redundant hardware item could cause loss of life or vehicle.
1S	A single failure in a safety or hazard monitoring system that could cause the system to fail to detect, combat, or operate when needed during the existence of a hazardous condition and could result in loss of life or vehicle.
2	A single failure that could cause loss (damage) of a vehicle system.
3	All others.

Cause - Major reason or event that produces a failure mode.

Critical Equipment/System - Ground Support Equipment/Facility Systems are assessed as critical if loss of overall system function or improper performance of a system function could result in the loss of life, loss of vehicle, or damage to a vehicle system.

Critical Item - A critical item is defined as a Criticality Category 1, 1S, or 2 Single Failure Point.

Criticality Assessment - An analysis of each system function to determine if loss or improper performance of the function could result in a critical or noncritical effect.

Like Redundancy - Similar hardware items performing the same function.

Unlike Redundancy - Non-identical items performing the same function.

2.2.2.2 Hazard Definitions and Categories. Hazard definitions and categories are defined as follows:

Hazard - The presence of a potential risk situation caused by an unsafe act or condition.

Hazard Analysis - The determination of potential sources of danger and recommended resolutions in a timely manner for those conditions found in either the hardware/software systems, the person-machine relationship, or both, which cause loss of personnel capability, loss of system, or loss of life or injury to the public.

Hazard Report Closure Classification.

a. Eliminated Hazard - A hazard that has been eliminated by removing the hazard source or by deleting the hazardous operations.

b. Controlled Hazard - The likelihood of occurrence has been reduced to an acceptable level by implementing the appropriate hazard reduction precedence sequence to comply with program requirements.

c. Accepted Risk - Hazard which has not been counteracted by redundancy purge provisions, appropriate safety factors, containment/isolation provision, backup system/operation, safety devices, alarm/caution and warning devices, or special automatic/manual procedures. Catastrophic hazards, critical hazards, hazards resulting from failure to meet program requirements, and Single Failure Points (SFPs) in emergency systems will be documented. A hazard will be classified as an "accepted risk" only after (1) all reasonable risk avoidance measures have been identified, studied, and documented; (2) project/program management has made a decision to accept the risk on the basis of documented risk acceptance rationale; and (3) Safety management has concurred in the accepted risk rationale.

Severity Level - Should the hazard occur, its worst case severity would be:

a. Catastrophic - Hazard could result in a mishap causing fatal injury to personnel, and/or loss of one or more major elements of the flight vehicle or ground facility.

b. Critical - Hazard could result in serious injury to personnel, and/or damage to flight or ground equipment which would cause mission abort or a significant program delay (one or more days).

c. Marginal - Hazard could result in a mishap of minor nature inflicting first-aid injury to personnel, and/or damage to flight or ground equipment which can be tolerated without abort or repaired without significant program delay (less than one day).

Hazard Report Status.

a. Closed - Corrective action to eliminate or control the hazard is completed, evaluated, and verified and management actions to accept the safety risks are completed. Actions taken, organization which performed actions and completion dates are to be documented in this data element.

b. Open - Corrective action evaluation and verification is in progress. The status shall remain open until management has reviewed the actions taken and accepted the safety risk. Actions required, organization responsible for performing the actions and due dates are to be documented in this data element.

2.2.3 DOCUMENTATION LIST. The document 79K11077, "System Documentation List," establishes the system baseline configuration. The following documents were used in completing this analysis:

Document/Drawing No.	Rev.	Outstanding EOs	Title
NSTS 22206	C	-	Requirements for Preparation and Approval of Failure Modes and Effects Analysis (FMEA) and Critical Items List (CIL)
NSTS 22254	-	-	Methodology for Conduct of NSTS Hazard Analyses
NSS/GO 1740.9	-	-	NASA Safety Standards for Lifting Devices and Equipment
79K11077	A	-	System Documentation List

Document/Drawing No.	Rev.	Outstanding EOs	Title
79K08951	D	147	Orbiter Processing Facility, Orbiter Access Equipment, High Bay No. 1
79K16117	B	274	Access Stand Modifications, Orbiter Processing Facility High Bay 2
79V16117		1	Zero "G" Counterweight and Enclosure Plan and Sections
RK-ZG-520790			Installation, Payload Bay Door Opening, Zero "G"
79K16142		2	Horizontal Zero Gravity Simulator Payload Bay Door and Radiator, OPF LC39
OMI V6B85	C		Preventative Maintenance PLB & RAD Zero G Sim
SD 1348			Assembly Drawing (Thern Inc., Worm Gear Winch Model 484B)
OMI V9023	H		Orbiter Payload Bay Door Operations (Horizontal/ Vertical)
Form 46D0785			Owner's Manual for Worm Gear Hand Winch, Thern Inc., Winona, Minnesota
80K52908			Payload Bay Bridges Cargo Hoist Addition
SAA09FY093-006	C		System Assurance Analysis of the Payload Bay Area Access Bridge, Orbiter Processing Facility High Bay 1 and 2
SAA09FY093-007	A		System Assurance Analysis of the Orbiter Main Access Platform for the Orbiter Processing Facility (OPF)

Document/Drawing No.	Rev.	Outstanding EOs	Title
SAA09GSP8-001			System Assurance Analysis Report of the Compressed Air System for the Orbiter Processing Facility

2.3 SYSTEM DESCRIPTION

The Horizontal Zero Gravity Simulator (Zero-G System) in the Orbiter Processing Facility is used to counterbalance the Orbiter Payload Bay Doors when they are opened/closed. When the Payload Bay Doors are open, the system is used to counterbalance the forward radiators when they are deployed/stowed. Zero gravity is simulated by the use of counterbalancing weights. The weights pull upward on the door/radiator through a cable/pulley/trolley system to negate the gravitational pull. The weights are adjustable to match the weight of the door or radiator.

The components of the Zero-G System are mounted on the Payload Bay Area Access Bridges with the exception of the weight baskets and cages (see figures 1 and 2). These are located within the Main Access Platforms of the OPF. During the Door opening/closing, one Access Bridge is positioned over the forward half of the Doors and the other Bridge is positioned over the aft half. They are aligned with the counterweight cages and the attachment points on the Payload Bay Door Handling Adapters. During the forward radiator deploying/stowing, only the forward Zero-G System is used.

The interface between the Zero-G system and the Orbiter Payload Bay Doors for their opening/closing is the Payload Bay Door Handling, Adapter, and C-Frame Assemblies with PMN H70-0529. The interface between the Zero-G system and the Orbiter Payload Bay Door Forward Radiators is the Payload Bay Door Radiator Lifting Fixtures with PMN H70-0666.

There is one simulator assembly per Payload Bay Area Access Bridge. This makes a total of two (2) simulators per High Bay, for a total of six (6) in the OPF. Each simulator assembly has the following components:

Part Name	Quantity
Cable Anchor	2
Wire Cable	2
Trolley Assembly	2
Sheave & Pin Assembly	4
Double Sheave Bracket Assembly	2
Counterweight Basket Assembly	2
Counterweight Cage	2
Single Sheave Bracket Assembly	2
Worm Gear Winch Assembly	2

2.3.1 WINCH ASSEMBLY. Each Zero-G Simulator has two Thern Inc., winch assemblies, one mounted on each end of the Access Bridge. Each winch assembly consists of a Thern Inc. worm gear driven winch, a Thern Inc. disc brake mounted on the input shaft, and an air wrench drive adapter (see figure 3).

2.3.1.1 Thern Model 484 Winch. The model 484 winch is a worm gear driven winch with a 62:1 reduction ratio and a maximum shaft input of 600 RPM. The worm gear reducer is designed to be motor driven and consists of a bronze gear and a steel worm keyed onto the input shaft. The gear operates in an oil bath and directly drives the drum shaft and drum. Both shafts operate in bronze bearings with oil seals. The gearcases in high bays 1 and 2 are constructed out of cast iron, while the gearcases in high bay 3 are aluminum. The frames and drum weldments are steel. The winch has a capacity of 3200 pounds.

2.3.1.2 Thern Disc Brake. The Thern Disc Brake is fitted to the winch input drive shaft. The disc brake prevents any freewheeling of the winch. Whenever a load is applied to the winch, the discs press together thus allowing the drum to turn only when the handle is turned. When the handle is turned backwards for lowering, the discs loosen slightly, allowing them to slip and permit the drum to turn backwards. When the handle stops, the discs tighten and hold the load.

2.3.2 TROLLEY AND RAIL ASSEMBLY. The trolley assembly consists of two off-the-shelf Cleveland Tramrail Inc. carrier head assemblies, two Railmark pulleys, and trolley structure (see figure 4). There is one carrier head assembly at each end of the trolley. Each carrier head has two carrier rollers and four guide rollers to maintain alignment. The carrier head assemblies ride on an off-the-shelf Cleveland Tramrail Inc. TARCA Track (#4200), which is fixed to the Payload Bay Area Access Bridge.

The trolley assembly is not driven, however it is self-aligning. If the load moves from under the trolley, the cable pull is no longer vertical. The cable then pulls sideways on the trolley until it is realigned over the load.

2.3.3 COUNTERWEIGHT BASKET ASSEMBLY. Each Counterweight Basket consists of a rigid metal frame, counterweights, and casters (see figure 5). The casters guide the frame during its up/down movement within the counterweight cages. Four casters are mounted on the frame with two each on opposing sides. The counterweights are strapped within the frame.

There are two baskets stacked in each forward cage and one basket in each aft cage. During door operations, all three baskets are used. Only the upper forward basket is used during radiator operations since the radiator requires less weight to counterbalance it.

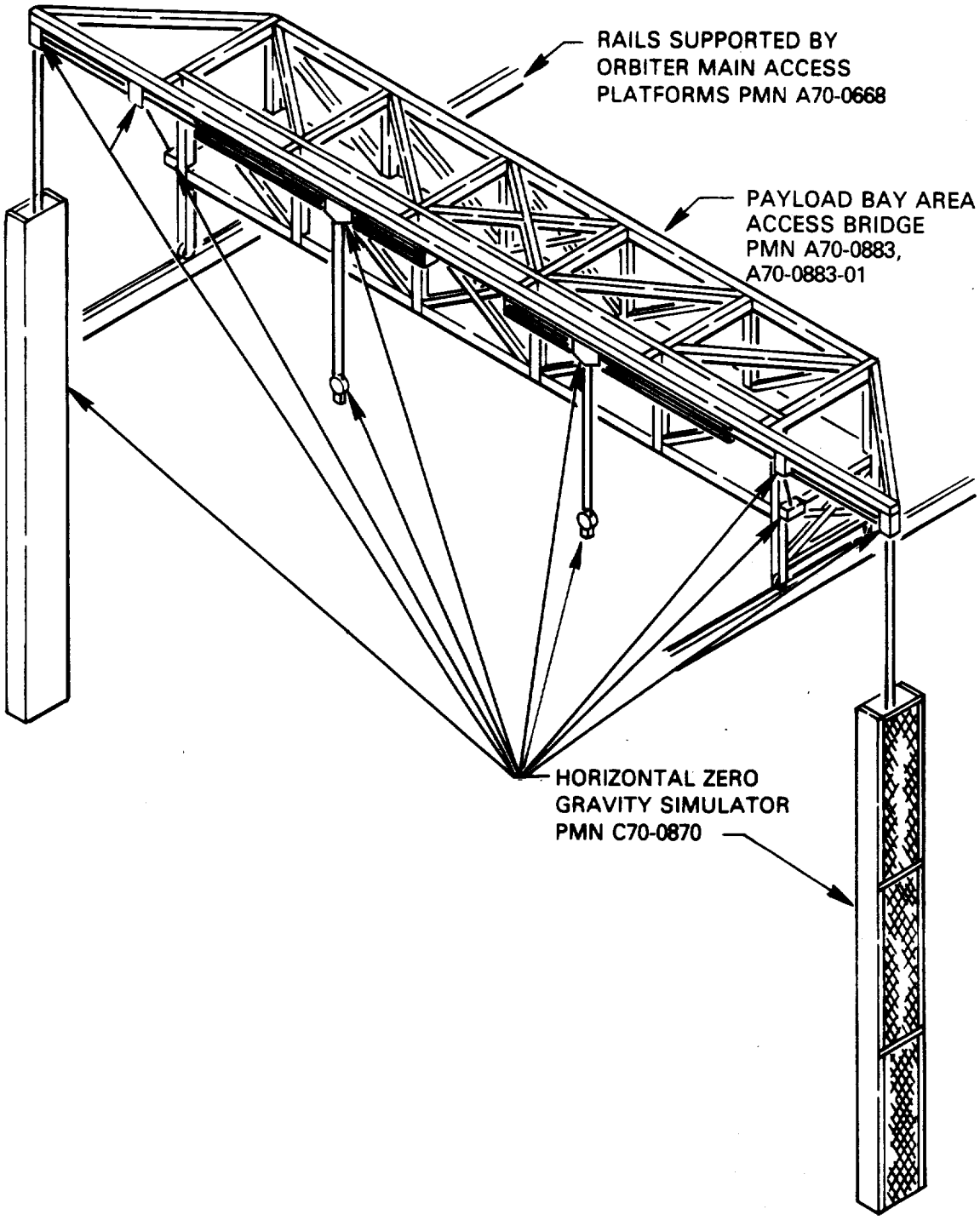

FIGURE 1. HORIZONTAL ZERO GRAVITY SIMULATOR MOUNTED ON PAYLOAD BAY AREA ACCESS BRIDGE

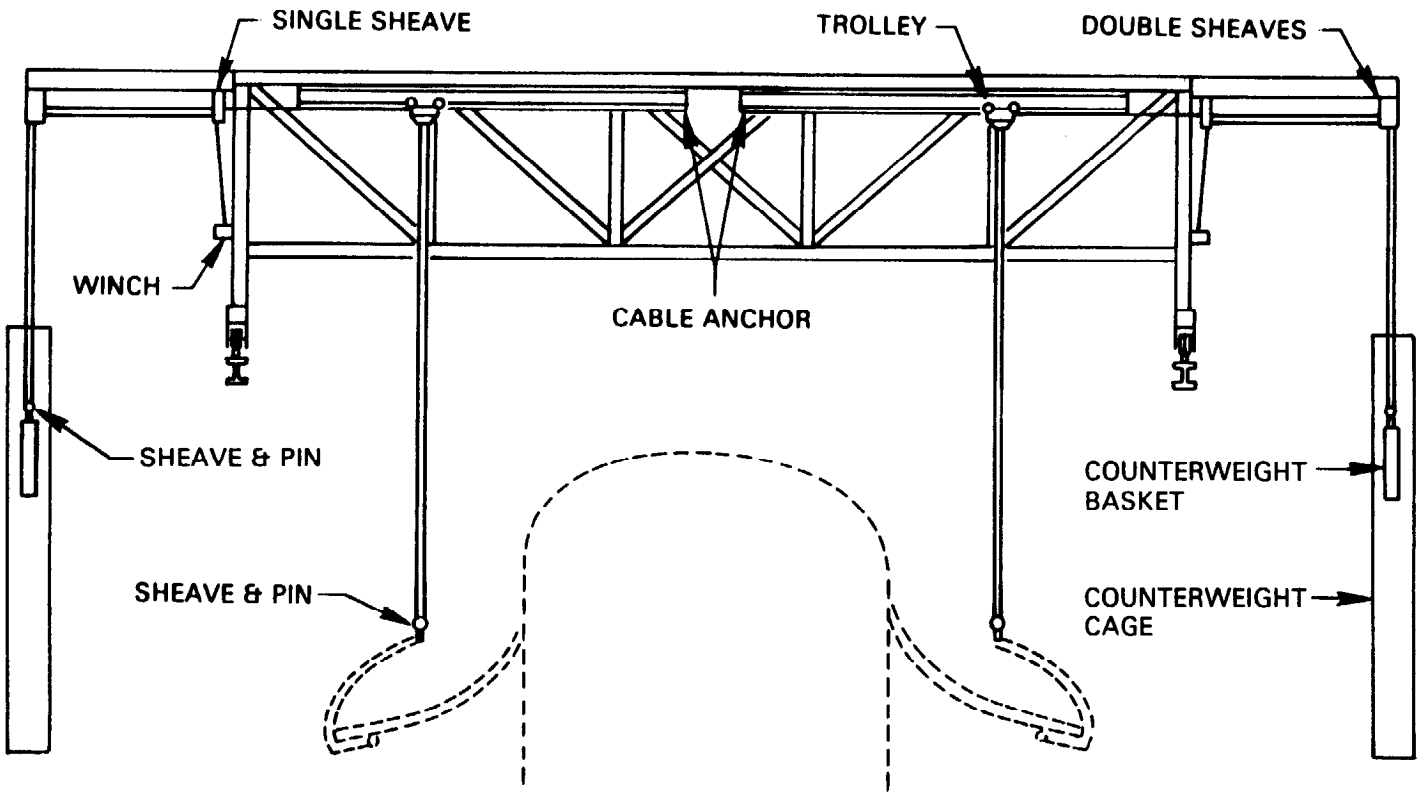

FIGURE 2. HORIZONTAL ZERO GRAVITY SIMULATOR MOUNTED ON PAYLOAD BAY AREA ACCESS BRIDGE

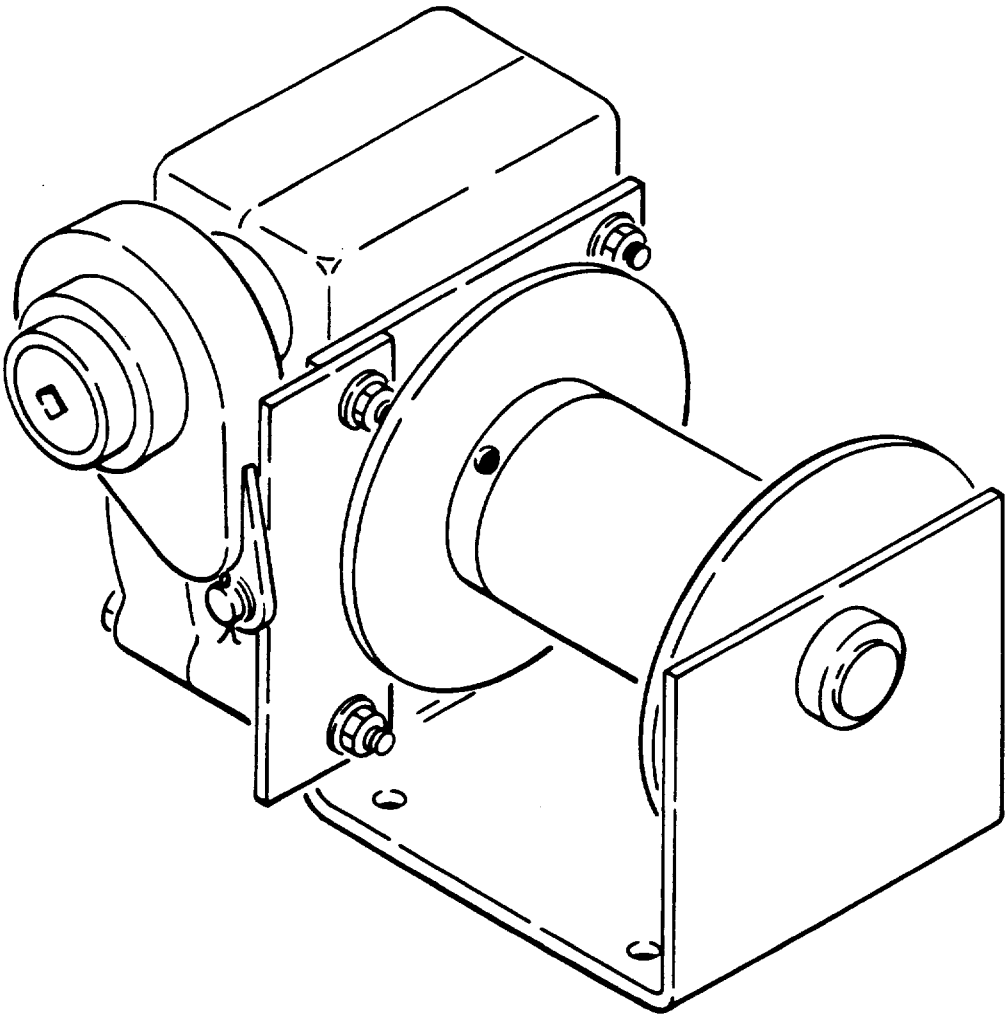

FIGURE 3. WORM GEAR WINCH ASSEMBLY, MODEL 484B, THERN, INC.

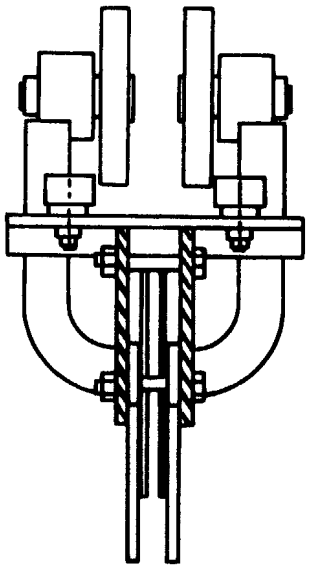

SECTION A-A

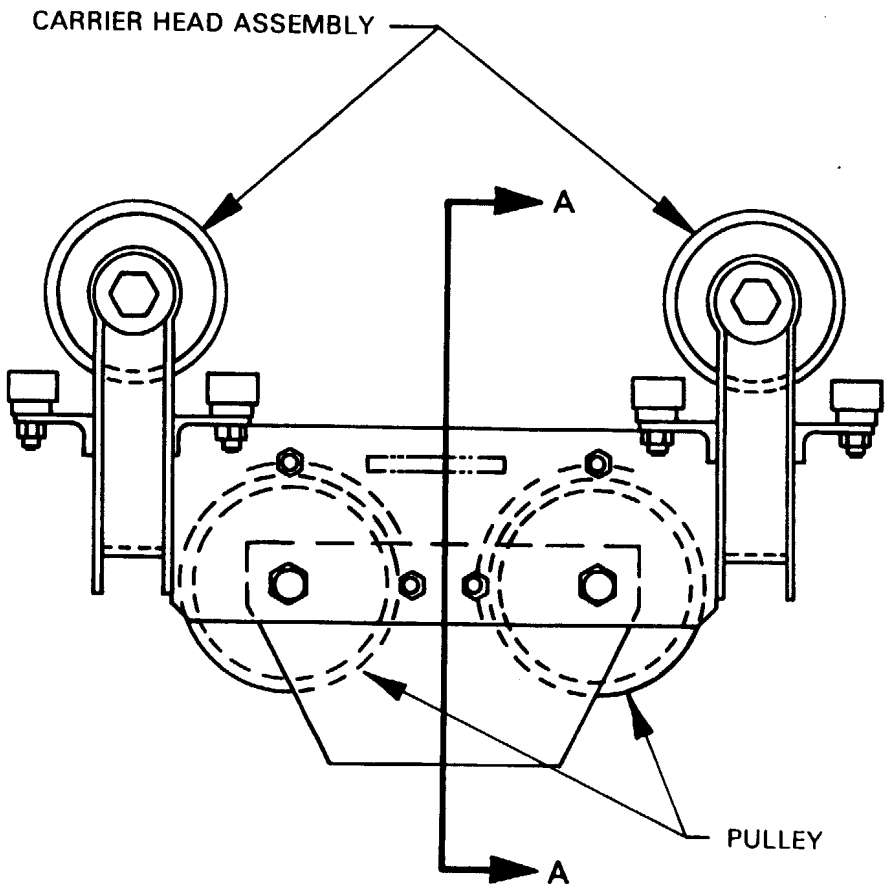

FIGURE 4. TROLLEY ASSEMBLY

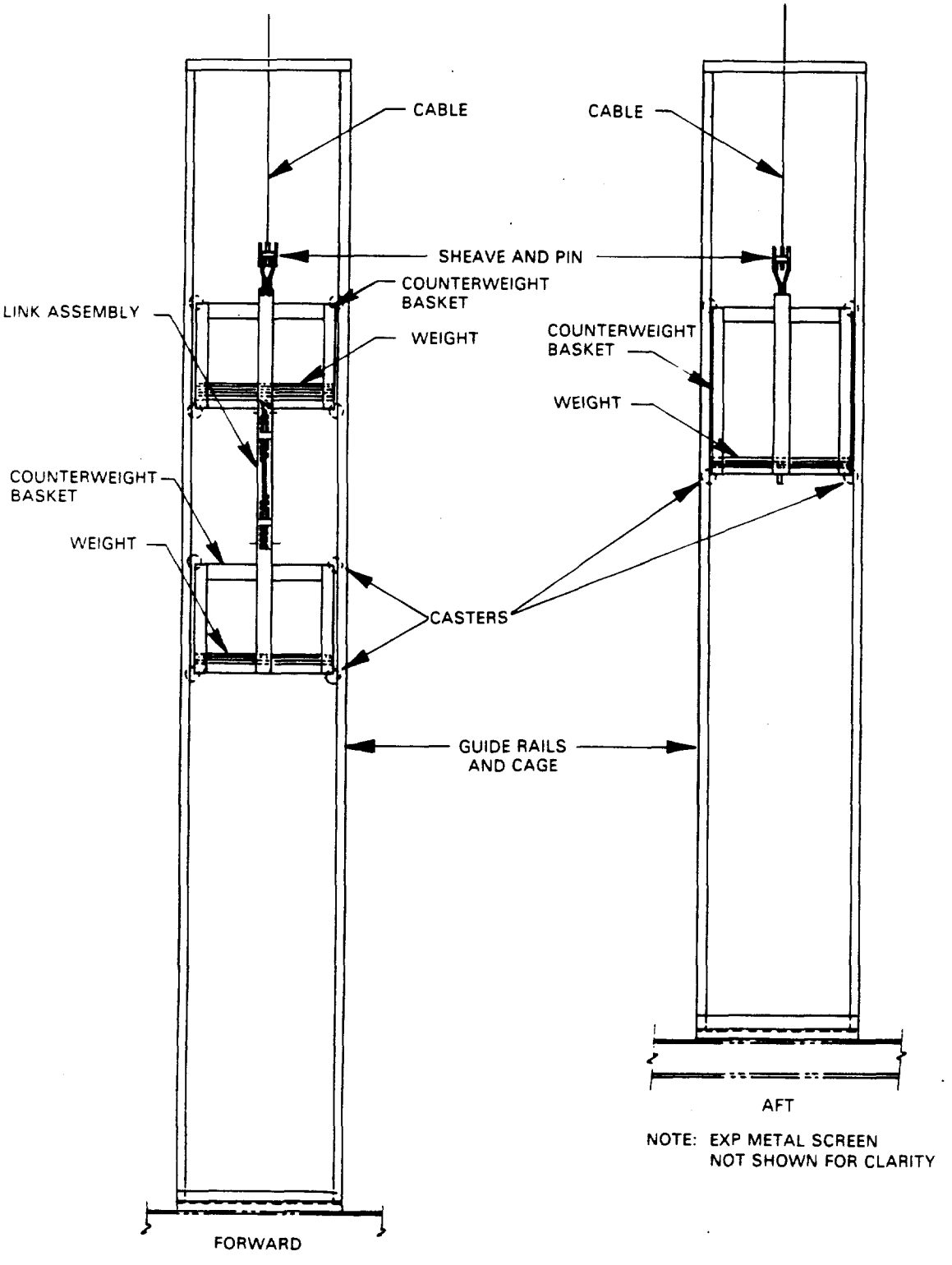

FIGURE 5. COUNTERWEIGHT BASKET ASSEMBLY

2.4 CRITICALITY ASSESSMENT

The system input and output functions are identified in figure 6. System Functional Block Diagram (worksheet 5122-001), and assessed on the following System Criticality Assessment Summary Sheets (worksheet 5122-002).

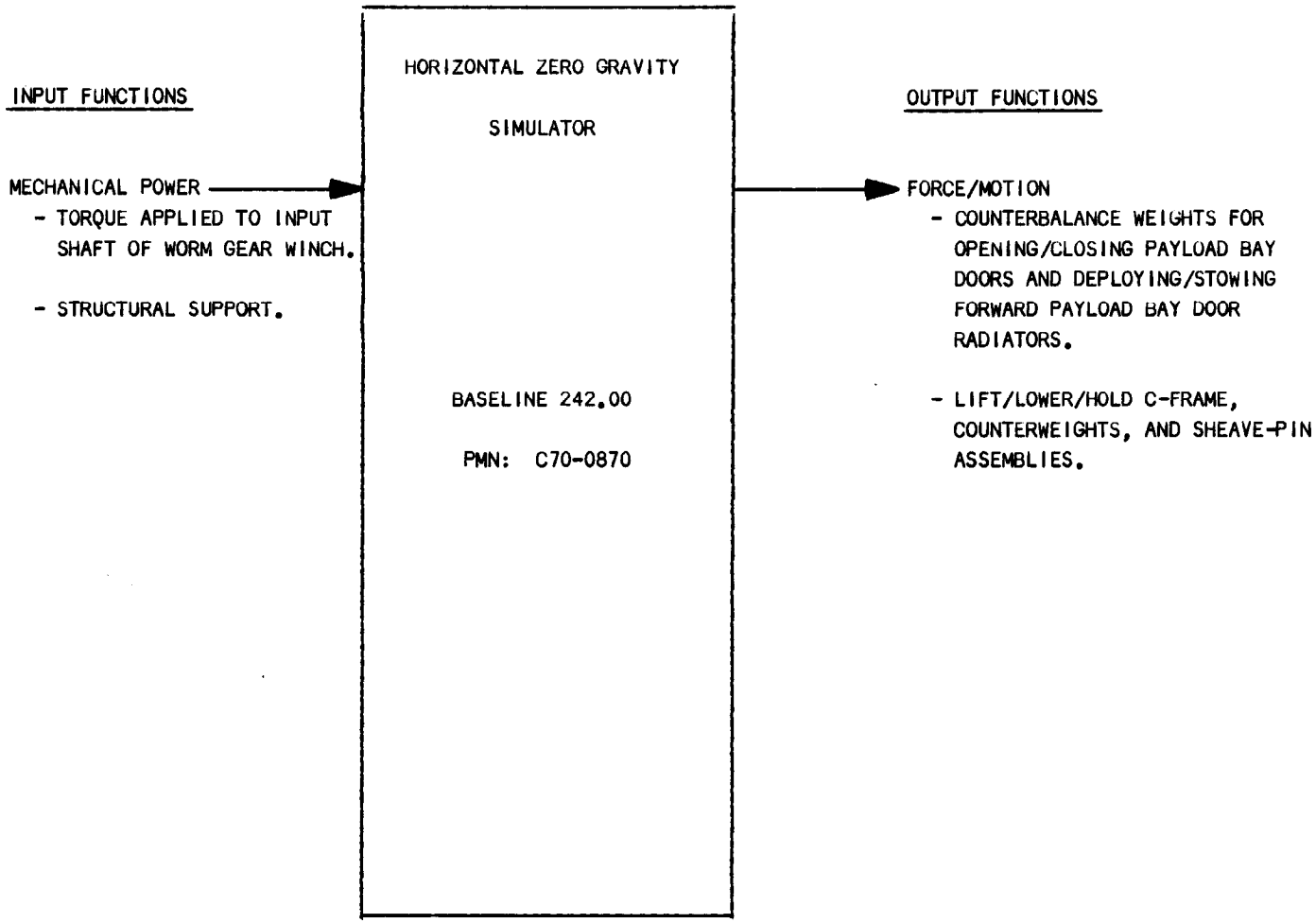

Figure 6. System Functional Block Diagram of the Horizontal Zero Gravity Simulator

SYSTEM CRITICALITY ASSESSMENT SUMMARY SHEET			SHEET 1 OF 1
PROGRAM MODEL NO. C70-0870	SYSTEM/SUBSYSTEM HORIZONTAL ZERO GRAVITY SIMULATOR	STATION SET (NAME AND NUMBER) SS-19, GD ORBITER PROCESSING FACILITY	SCHEMATIC DRAWING NO. 79K08951, 79K16117, 79V16117
BASELINE 242.00	LOCATION OPF HIGH BAYS 1, 2, 3 PAYLOAD BAY ACCESS BRIDGE	PREPARED BY P. CLUKEY, LSOC 51-22	DATE OCTOBER 1990

INPUT/OUTPUT	FUNCTION	TIME PERIOD	EFFECT OF LOSS/FAILURE	CRIT/ NONCRIT	NOTES
INPUT					
TORQUE APPLIED TO INPUT SHAFT OF WORM GEAR WINCH.	PROVIDE POWER TO WINCH FOR RAISING/LOWERING OPERATIONS.	PREOPERATIONS, POSTOPERATIONS	SYSTEM INOPERATIVE	NC	
STRUCTURAL SUPPORT	SUPPORT COMPONENTS OF ZERO-G SIMULATOR.	AS REQUIRED	LOSS OF ABILITY TO SUPPORT C-FRAME AND COUNTERWEIGHTS WHICH COULD RESULT IN DAMAGE TO A VEHICLE SYSTEM (ORBITER PAYLOAD BAY AREA OR PAYLOAD).	C	FMEA ANALYSIS NOT REQUIRED PER NSS/GO 22206 REV C
OUTPUT					
COUNTERBALANCE WEIGHTS FOR OPENING/CLOSING PAYLOAD BAY DOORS AND DEPLOYING/STOWING FORWARD PAYLOAD BAY DOOR RADIATORS.	PROVIDE WEIGHTS TO SIMULATE "ZERO GRAVITY" TO THE DOOR OR RADIATOR STRUCTURE AND ITS OPERATING MECHANISMS.	DOOR/RADIATOR OPERATIONS	LOSS OF "ZERO GRAVITY" COUNTERBALANCE TO THE PAYLOAD BAY DOORS OR FORWARD PAYLOAD BAY DOOR RADIATORS WHICH COULD RESULT IN DAMAGE TO A VEHICLE SYSTEM (ORBITER PAYLOAD BAY DOOR STRUCTURE OR OPERATING MECHANISMS).	C	CRITICAL SINGLE FAILURE POINT (SEE FMEA WORKSHEET)
LIFT/LOWER/HOLD C-FRAME, COUNTERWEIGHTS, AND SHEAVE-PIN ASSEMBLIES.	SUPPORT AND MANEUVER C-FRAME ASSEMBLY TO AND FROM STORAGE ON THE PAYLOAD BAY ACCESS BRIDGE, ADJUST COUNTERWEIGHTS, RAISE/LOWER SHEAVE-PIN ASSEMBLIES.	PREOPERATIONS, POSTOPERATIONS	LOSS OF ABILITY TO SUPPORT C-FRAME, COUNTERWEIGHTS, OR SHEAVE-PIN ASSEMBLIES WHICH COULD RESULT IN DAMAGE TO A VEHICLE SYSTEM (ORBITER PAYLOAD BAY AREA OR PAYLOAD). NOTE: CONSIDERATION WAS GIVEN TO PREMATURE OPERATION, FAILURE TO OPERATE ON TIME, FAILURE DURING OPERATION, AND FAILURE TO CEASE OPERATION ON TIME.	C	CRITICAL SINGLE FAILURE POINT (SEE FMEA WORKSHEET)

WORKSHEET 5122-002

2.5 MECHANICAL FMEA WORKSHEETS AND BLOCK DIAGRAMS

The mechanical components of the critical output functions identified in section 2.4 for this system were identified from the documents and diagrams referenced in the Documentation List and are analyzed on the following FMEA Worksheets (worksheet 5122-003). A passive items list precedes the FMEA Worksheets and is shown on the following page (Worksheet 5122-004).

FAILURE MODES AND EFFECTS ANALYSIS

FOR THE

HORIZONTAL ZERO GRAVITY SIMULATOR

Mechanical

C70-0870

The following components were considered passive in the analysis for this section.

Nomenclature	Find Number
Cable Anchor	None
Wire Cable	None
Counterweight Cages	None

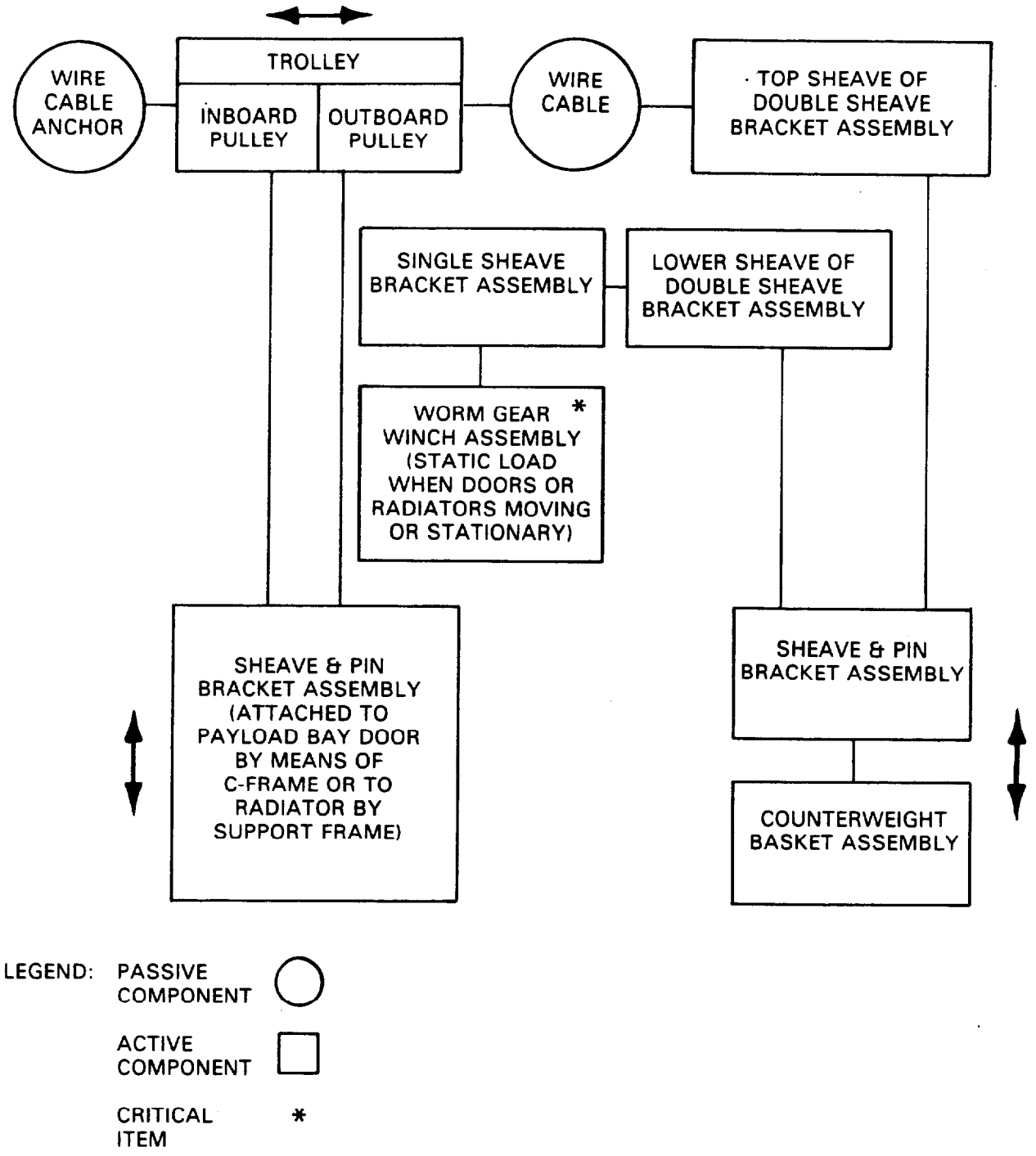

LEGEND: PASSIVE COMPONENT ○

ACTIVE COMPONENT □

CRITICAL ITEM *

FIGURE 7. MECHANICAL POWER FLOW DIAGRAM FOR HORIZONTAL ZERO GRAVITY SIMULATOR (ZERO "G" SYSTEM)

FAILURE MODES AND EFFECTS ANALYSIS (FMEA) WORKSHEET

System HORIZONTAL ZERO GRAVITY SIMULATOR
Subsystem MECHANICAL
Drawing No. 79K16117, 79V16117, 79K08951
PMN C70-0870

Program SPACE SHUTTLE

Facility or Station Set OPF HIGHBAYS 1,2,3
Page 1 of 3 Date OCT 1990

Prepared By P. CLUKEY, LSOC 51-22

FIND NO. PART NO.	PART NAME	PART FUNCTION	A. FAILURE MODE B. CAUSE C. FMN D. DETECTION METHOD E. CORRECTING ACTION F. TIME TO EFFECT G. TIMEFRAME	FAILURE EFFECT ON SYSTEM PERFORMANCE	FAILURE EFFECT ON VEHICLE SYSTEMS AND/OR PERSONNEL SAFETY	CRIT CAT
484B (THERN INC.)	WORM GEAR WINCH ASSEMBLY	ANCHORS ONE END OF WIRE ROPE DURING DOOR/RADIATOR OPERATIONS OR SUPPORTS AND MANEUVERS C-FRAME, COUNTERWEIGHTS, AND SHEAVE-PIN ASSEMBLIES DURING PRE/POSTOPERATIONS.	A. GEARS DISENGAGE B. STRUCTURAL FAILURE C. 09FTP3-006.001 D. VISUAL E. NONE F. IMMEDIATE G. N/A	TORQUE FOR HOLDING LOAD WILL BE LOST. LOAD SUSPENDED FROM BRACKET WILL DROP.	POSSIBLE LOSS (DAMAGE) TO ORBITER PAYLOAD BAY DOORS, RADIATORS, PAYLOAD, OTHER VEHICLE SYSTEMS.	2
			A. BRAKE DISENGAGES OR FAILS TO SET B. DISCS WORN OR GLAZED C. 09FTP3-006.002 D. VISUAL E. NONE F. IMMEDIATE G. N/A	BRAKE FORCE FOR HOLDING LOAD WILL BE LOST. LOAD SUSPENDED FROM BRACKET WILL DROP IF LOAD BACK-DRIVES THE WORM GEARS.	POSSIBLE LOSS (DAMAGE) TO ORBITER PAYLOAD BAY DOORS, RADIATORS, PAYLOAD, OTHER VEHICLE SYSTEMS.	2
NONE	SINGLE SHEAVE BRACKET ASSEMBLY	SUPPORT FOR CABLE MAKING RIGHT ANGLE TURN FROM WINCH TO DOUBLE SHEAVE ASSEMBLY.	PULLEY WILL NOT TURN DUE TO BEARING FAILURE.	CABLE SLIDES THROUGH GROOVE IN PULLEY RATHER THAN HAVING CABLE DRIVE PULLEY. DELAY IN OPERATIONS.	NO EFFECT.	3

WORKSHEET 5122-003

901018mIM3-1117/OMRF/23

FAILURE MODES AND EFFECTS ANALYSIS (FMEA) WORKSHEET

System HORIZONTAL ZERO GRAVITY SIMULATOR
Subsystem MECHANICAL
Drawing No. 79K16117, 79V16117, 79K08951
PMN C70-0870

Program SPACE SHUTTLE

Facility or Station Set OPF HIGHBAYS 1,2,3
Page 2 of 3 Date OCT 1990

Prepared By P. CLUKEY, LSOC 51-22

FIND NO. PART NO.	PART NAME	PART FUNCTION	A. FAILURE MODE B. CAUSE C. FMN D. DETECTION METHOD E. CORRECTING ACTION F. TIME TO EFFECT G. TIMEFRAME	FAILURE EFFECT ON SYSTEM PERFORMANCE	FAILURE EFFECT ON VEHICLE SYSTEMS AND/OR PERSONNEL SAFETY	CRIT CAT
NONE	DOUBLE SHEAVE BRACKET ASSEMBLY	SUPPORT FOR CABLE MAKING RIGHT ANGLE TURN FROM COUNTERWEIGHT BASKET TO SINGLE SHEAVE ASSEMBLY AND TROLLEY.	PULLEY WILL NOT TURN DUE TO BEARING FAILURE.	CABLE SLIDES THROUGH GROOVE IN PULLEY RATHER THAN HAVING CABLE DRIVE PULLEY. DELAY IN OPERATIONS.	NO EFFECT.	3
NONE	COUNTERWEIGHT BASKET ASSEMBLY	HOLDS WEIGHTS TO COUNTERBALANCE PAYLOAD BAY DOOR OPENING/CLOSING (FORWARD END). DISCONNECTED AND INACTIVE DURING RADIATOR DEPLOYMENT/STOWAGE.	CASTER(S) WILL NOT TURN DUE TO BEARING FAILURE	CASTER(S) CANNOT ROLL, COUNTERWEIGHT WILL MOVE WITH HESITATION OR NOT AT ALL. DELAY IN OPERATIONS.	NO EFFECT.	3
NONE	COUNTERWEIGHT BASKET ASSEMBLY	HOLDS WEIGHTS TO COUNTERBALANCE PAYLOAD BAY DOOR OPENING/CLOSING AND RADIATOR DEPLOYMENT/STOWAGE (FORWARD END).	CASTER(S) WILL NOT TURN DUE TO BEARING FAILURE	CASTER(S) CANNOT ROLL, COUNTERWEIGHT WILL MOVE WITH HESITATION OR NOT AT ALL. DELAY IN OPERATIONS.	NO EFFECT.	3

WORKSHEET 5122-003

901018mlM3-1117/OMRF/24

FAILURE MODES AND EFFECTS ANALYSIS (FMEA) WORKSHEET

System HORIZONTAL ZERO GRAVITY SIMULATOR
Subsystem MECHANICAL
Drawing No. 79K16117, 79V16117, 79K08951
PMN C70-0870

Program SPACE SHUTTLE

Facility or Station Set OPF HIGHBAYS 1,2,3
Page 3 of 3 Date OCT 1990

Prepared By P. CLUKEY, LSOC 51-22

FIND NO. PART NO.	PART NAME	PART FUNCTION	A. FAILURE MODE B. CAUSE C. FMN D. DETECTION METHOD E. CORRECTING ACTION F. TIME TO EFFECT G. TIMEFRAME	FAILURE EFFECT ON SYSTEM PERFORMANCE	FAILURE EFFECT ON VEHICLE SYSTEMS AND/OR PERSONNEL SAFETY	CRIT CAT
NONE	COUNTERWEIGHT BASKET ASSEMBLY	HOLDS WEIGHTS TO COUNTERBALANCE PAYLOAD BAY DOOR OPENING/CLOSING (AFT END).	CASTER(S) WILL NOT TURN DUE TO BEARING FAILURE	CASTER(S) CANNOT ROLL, COUNTERWEIGHT WILL MOVE WITH HESITATION OR NOT AT ALL. DELAY IN OPERATIONS.	NO EFFECT.	3
NONE	TROLLEY	ADJUSTS TO POSITION OF BRACKET HOLDING LOAD TO ALLOW FOR STRAIGHT LINE OF PULL FOR WIRE ROPE.	1) CARRIER WHEEL WILL NOT TURN DUE TO BEARING FAILURE	1A) TROLLEY CANNOT ROLL SMOOTHLY. DELAY IN OPERATIONS.	1A) NO EFFECT.	3
				1B) TROLLEY CANNOT ADJUST TO LINE OF PULL. DELAY IN OPERATIONS.	1B) NO EFFECT.	3
			2) PULLEY WILL NOT TURN DUE TO BEARING FAILURE	2) CABLE SLIDES THROUGH GROOVE IN PULLEY RATHER THAN HAVING CABLE DRIVE PULLEY. DELAY IN OPERATIONS.	2) NO EFFECT.	3
NONE	SHEAVE AND PIN BRACKET ASSEMBLY	CONNECTS ZERO GRAVITY SIMULATOR TO PAYLOAD BAY DOOR HANDLING ADAPTERS OR FORWARD RADIATOR LIFTING FIXTURES.	PULLEY WILL NOT TURN DUE TO BEARING FAILURE.	CABLE SLIDES THROUGH GROOVE IN PULLEY RATHER THAN HAVING CABLE DRIVE PULLEY. DELAY IN OPERATIONS.	NO EFFECT.	3

WORKSHEET 5122-003

901018mIM3-1117/OMRF/25

2.6 ELECTRICAL FMEA WORKSHEETS AND BLOCK DIAGRAMS

There are no electrical components associated with this system.

2.7 FLEXHOSE FMEA WORKSHEETS

There are no flexhoses associated with the critical output functions identified in section 2.4 for this system.

The only associated hoses are those powering the air wrenches used in operating the Worm Gear Drive Winches. The operation of the winches occurs only when the wire cable is adjusted to mate the Sheave and Pin assemblies with the Counterweight Basket and C-Frame/Radiator Support Frame, raise/lower the C-Frame from storage on the Access Bridge, or to position the Counterweight Basket for operation.

Flexhoses used on the Worm Gear Winch Drive Assemblies for this system may also be used on winches for other systems in the Payload Bay Area.

2.8 ORIFICE FMEA WORKSHEETS

There are no orifices associated with this system.

2.9 FILTER FMEA WORKSHEETS

There are no filters associated with this system.

3.0 CRITICAL ITEMS LIST (CIL)

There were twelve Critical Items identified during this analysis, two for each of the six Simulator Assemblies, which are summarized on the following Critical Hardware List (worksheet 5122-011) and associated Critical Item Sheets (worksheet 5122-012).

3.1 CRITICAL HARDWARE LIST (CHL)

The Critical Items identified during this analysis are summarized on the following Critical Hardware List (worksheet 5122-011).

3.2 CRITICAL ITEMS SHEETS

The rationale for accepting the risk of retaining the identified Critical Items is on the following Critical Items Sheet(s) (worksheet 5122-012).

Critical Hardware List

Project Element: Horizontal Zero Gravity Simulator (6)
Subsystem: Horizontal Zero Gravity Simulator for Payload Bay Doors and Radiators

LRU PART NUMBER/ REFERENCE DESIGNATOR	LRU PART NAME	QTY (per subsystem)	LRU CRITICALITY
FMEA P/N	FMEA PART NAME/FM NO.	(QTY per LRU)	FM CRIT
484B	WORM GEAR WINCH ASSEMBLY	2/SIMULATOR	2
484B	WORM GEAR WINCH ASSEMBLY FM. NO. 09FPT3-006.001 09FPT3-006.002	1	2

Critical Item: Worm Gear Winch Assembly (12 Items)

Find Number: None

Criticality Category: 2

SAA No: 09FTP3-006

System/Area: Payload Bay Area Access
High Bays 1, 2, and 3
Orbiter Processing Facility

NASA
Part No: None

PMN/ C70-0870/Horizontal
Name: Zero Gravity Simulator

Mfg/
Part No: Thern Inc./
Model 484B

Drawing/ 79K16117, 79V16117,
Sheet No: 79K08951

Function: Acts as an anchor for one end of the wire cable when the Payload Bay Doors are opened/closed or Radiators stowed/deployed. Supports and maneuvers C-frame, counterweights, and sheave-pin assemblies during pre/postoperations.

Critical Failure Mode/Failure Mode No: 1) Gears disengage/09FTP3-006.001
2) Brake disengages/09FTP3-006.002

Failure Causes: 1) Structural Failure.
2) Discs worn or glazed.

Failure Effect: Torque for holding load will be lost. Load suspended from bracket will drop, resulting in possible loss (damage) to the Orbiter Payload Bay Doors, Radiators, Payload or other vehicle systems.

Acceptance Rationale

Design:

- The model 484B winch is a worm gear driven winch with a 62:1 reduction ratio and a maximum shaft input of 600 RPM. The worm gear reducer is designed to be motor driven and consists of a bronze gear and a steel worm keyed onto the input shaft. The gear operates in an oil bath and directly drives the drum shaft and drum. Both shafts operate in bronze bearings with oil seals. The gearcases in high bays 1 and 2 are constructed out of cast iron, while the gearcases in high bay 3 are aluminum. The frames and drum weldments are steel.

Worm Gear Winch Assembly, 484B (Continued)

Design (Continued)

- The manufacturer assigns a load rating of 3,200 lbs. (with 2 layers of wire cable wrapped on the drum) and a design safety factor of 4 to 1 to the model 484B worm gear winch assembly. During Orbiter payload bay door or radiator movement, the worm gear winch assembly bears half the value of the counterweights (approx. 870 lbs.). Therefore, the operational safety factor is greater than 14 to 1.

- The disc brake is a self-adjusting, Weston brake. The disc brake bears little, if any, of the winch load due to the gear reduction and self-locking property of the worm gear.

Test:

- OMRSD File VI requires verification of annual static load test prior to each use.

- Each Simulator Assembly receives a static load test of 200 percent (3480 lbs.) of the rated working load on an annual basis per OMI V6B85

- Each Simulator Assembly receives an operational load test of 100 percent (1740 lbs.) of the rated working load on an annual basis per OMI V6B85.

- Pre-operational set up (attaching wire rope to counterweights and C-frame) during OMI V9023 verifies proper operation of worm gear winch assembly.

Inspection:

- OMI No. V6B85 will require the following annual inspections:

  - visually inspecting all components for surface corrosion.
  - check lubrication of each worm gear winch assembly, lubricate as required and oil winch shafts.
  - spectrographic/chemical analysis of gearbox lubrication.

Failure History:

- The PRACA database was queried and no failure data were retrieved against this component.

- The GIDEP failure data interchange system has been researched and no failures of this component were found.

Worm Gear Winch Assembly, 484B (Continued)

Operational Use:

- Corrective Action: No corrective action is available to mitigate the results of this failure mode.

- Timeframe: Since no corrective action is available, no time frame is applicable.

4.0 HAZARD ANALYSIS

System Safety Engineering has completed an analysis of the horizontal zero gravity simulator for the Orbiter payload bay doors and radiators. A KSC/RT Safety and Reliability Hazard Data Base Search for Hazard Reports pertaining to this equipment has been conducted by Baseline (B/L) Number, Program Model Number (PMN) and by Station Set (SS). The drawings in the SAA were reviewed and a walkdown of the associated equipment was made. The system was analyzed with emphasis on mechanical and pneumatic aspects. There were no propellant or electrical portions to be reviewed. A Qualitative Fault Tree Analysis and Columnar Format was developed for the system in which the top event was injury of personnel and damage to a vehicle system. Events leading to this top event are operator error, winch failure, and failure of passive components. There were no formal hazards identified in this analysis. The attached Hazard Identification Sheet (KSC Form 21-428), Fault Tree and Columnar Format provide additional information.

HAZARD IDENTIFICATION DATA

SYSTEM/SUBSYSTEM (Title)	WC	PMN	PCN
Zero-G Simulator for Payload Bay Doors, OPF 1,2,3	B/L 242.00	C70-0870	

The following hazard identification criteria were considered during the hazard analysis:

DESIGN SAFETY CHECKLIST SECTION NUMBER AND TITLE:

- [ ]
- [ ]
- [ ]
- [ ]
- [ ]
- [ ]

- [ ] HAZARD ANALYSIS ELEMENTS (GP-1045, APPENDIX B)
- [x] FAILURE MODE AND EFFECT ANALYSIS (FMEA)
- [x] FUNCTIONAL AND PHYSICAL INTERFACES
- [ ] OCCUPATIONAL SAFETY AND HEALTH STANDARDS (OSHA)
- [ ] SW-E-0002, SPACE SHUTTLE PROGRAM GSE GENERAL DESIGN REQUIREMENTS

The Hazard Analysis was based on the following system documentation (list documents here):

Document/Drawing No.:	Title:
NSTS 22254	Methodology for Conduct of NSTS Hazard Analyses
OMI V9023	Orbiter Payload Bay Door Operations
OMI V6B85	Preventive Maintenance, PLB and PAD Zero-G Simulator
NSS/GO 1740.9	NASA Safety Standards for Lifting Devices and Equipment
79K16142	Horizontal Zero-gravity Simulator for Payload Bay Doors and Radiator
80K52908	Payload Bay Bridges Cargo Hoist Addition
RK-ZG-520790	Installation, Payload Bay Door Opening, Zero-G
79K08951	Orbiter Processing Facility, Orbiter Access Equipment, HB 1
79K16117	Access Stand Modifications, OPF HB 2

No hazards were identified

Linda Pluring
SYSTEM SAFETY ENGINEER

DESIGNER: Paul R Schuch 10-16-98
SUPERVISOR, SYSTEM SAFETY ENGINEERING

APPROVED (NASA):

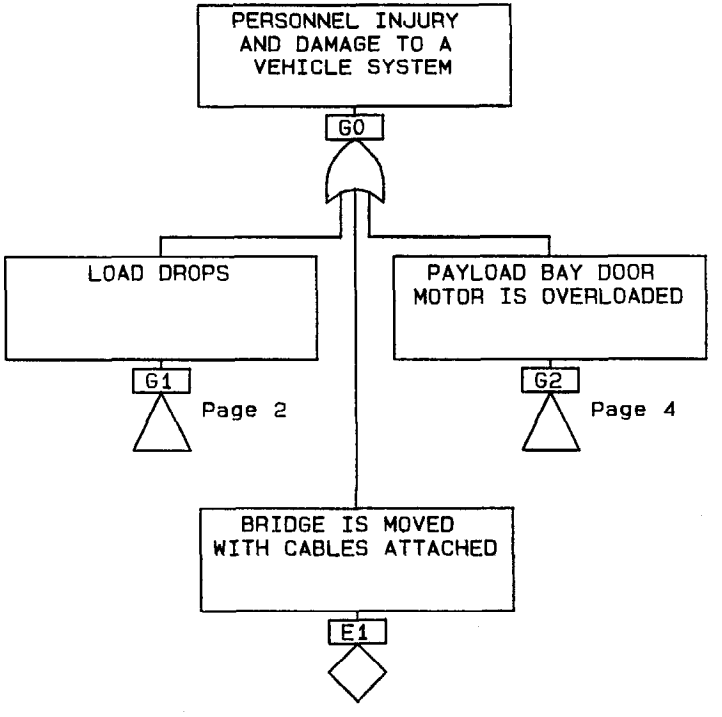

ZERO-G SIMULATOR FOR PAYLOAD BAY DOORS	A: ZG1.CAF	9/13/90	Page 1

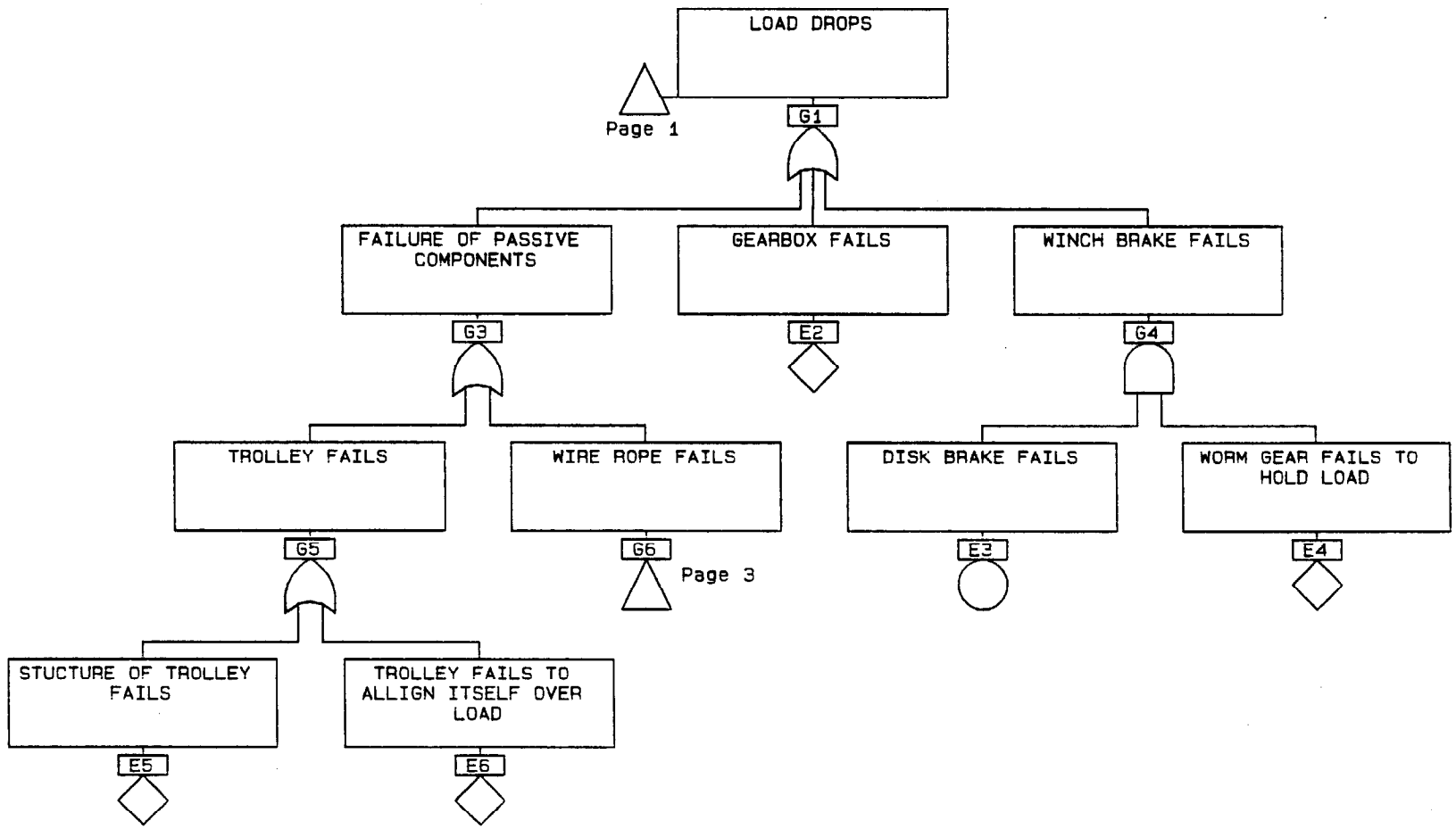

ZERO-G SIMULATOR FOR PAYLOAD BAY DOORS	A: ZG1.CAF	9/13/90	Page 2

SAA09FTP3-006

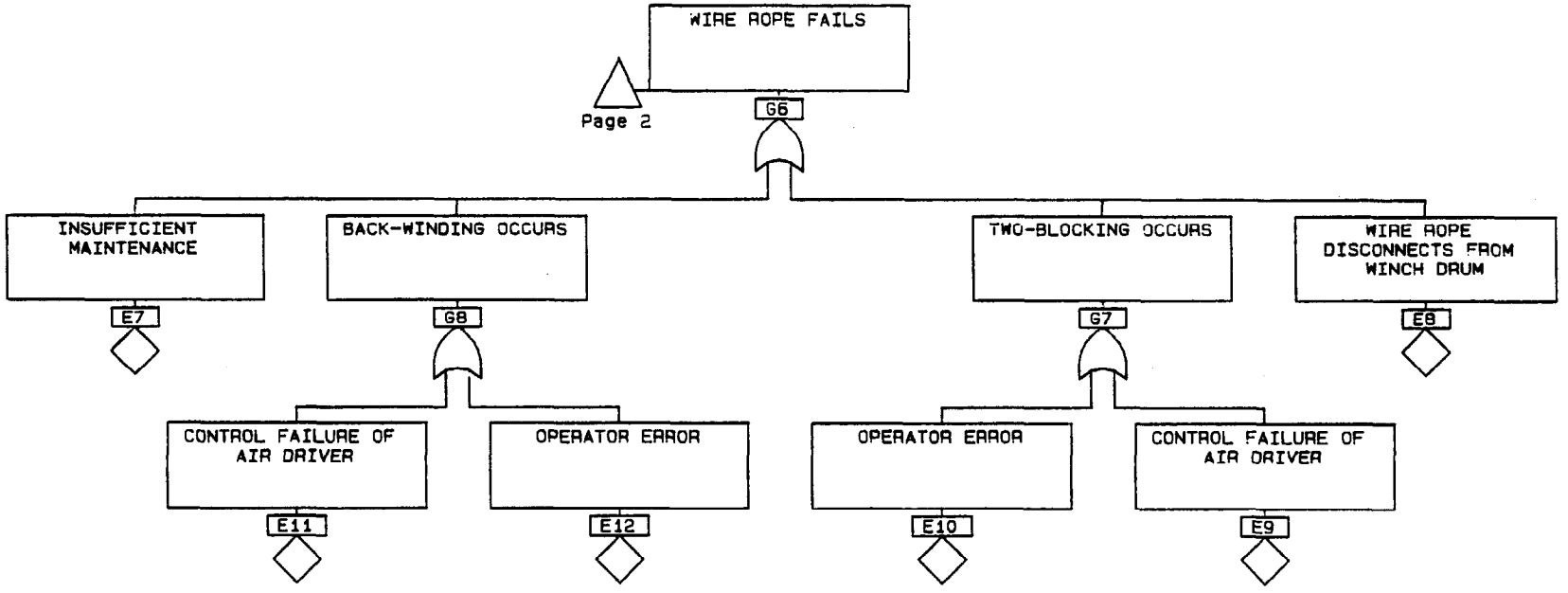

ZERO-G SIMULATOR FOR PAYLOAD BAY DOORS | A: ZG1.CAF | 9/13/90 | Page 3

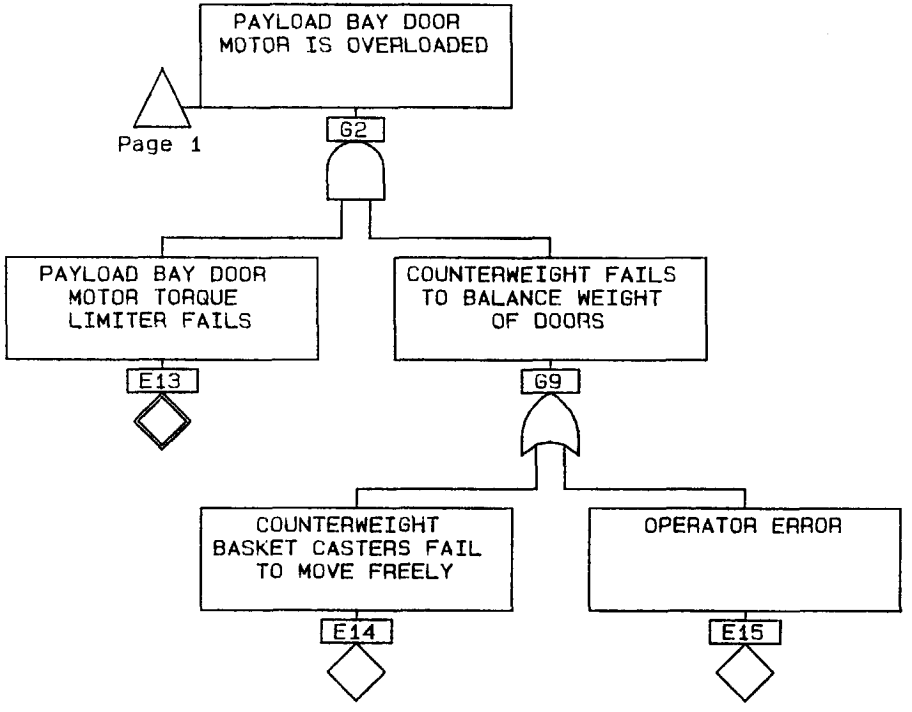

ZERO-G SIMULATOR FOR PAYLOAD BAY DOORS	A: ZG1.CAF	10/10/90	Page 4

SPACE SHUTTLE SYSTEM HAZARD ANALYSIS

PHASE/MODE FUNCTION: ZERO-G SIMULATOR FOR PAYLOAD BAY DOORS

ENGINEER: L. GLUSING

TASK/OPERATION OR FACILITY: OPF 1, 2, 3

DATE: 14 SEPTEMBER, 1990

SHEET 1 OF 3

HAZARDOUS CONDITION	HAZARD CAUSE	HAZARD EFFECT	SAFETY REQUIREMENTS	HAZARD ELIMINATION/ CONTROL PROVISIONS
G1. LOAD DROPS	G3. FAILURE OF PASSIVE COMPONENTS OR E2. GEARBOX FAILS OR G4. WINCH BRAKE FAILS	G0. PERSONNEL INJURY AND DAMAGE TO A VEHICLE SYSTEM	E2. GEARING SHALL BE DESIGNED AND MANUFACTURED TO COMPLY WITH AGMA STANDARDS (NSS/GO 1740.9, 4.2.5K)	G3. DEVELOPED UNDER G3 E2. OMI V9023 REQUIRES ANNUAL CHECK OF INTERNAL MECHANICAL ELEMENTS - REF CIL, FAILURE MODE 1 G4. DEVELOPED UNDER G4
G3. FAILURE OF PASSIVE COMPONENT	G5. TROLLEY FAILS OR G6. WIRE ROPE FAILS	G1. LOAD DROPS		G5. DEVELOPED UNDER G5 G6. DEVELOPED UNDER G6
G5. TROLLEY FAILS	E5. STRUCTURE OF TROLLEY FAILS OR E6. TROLLEY TO ALIGN ITSELF OVER LOAD	G3. FAILURE OF PASSIVE COMPONENTS	E5. TROLLEY MUST WITHSTAND ANNUAL PROOFLOAD OF WINCH TO 125% OF RATED LOAD (NSS/GO 1740.9, 4.3.1)	E5. ZERO-G SYSTEM IS ANNUALLY LOAD TESTED TO 3480 LBS (OMI V6B85) E6. UNDER TEST LOAD OF 1740 LBS, TROLLEY IS TRAVERSED SEVERAL FEET ALONG RAIL FOR ANNUAL TEST (OMI V6B85)
G6. WIRE ROPE FAILS	E7. INSUFFICENT MAINTENANCE OR G7. TWO-BLOCKING OCCURS OR G8. BACK-WINDING OCCURS OR	G3. FAILURE OF PASSIVE COMPONENT	E7. A PREVENTIVE MAINTENANCE PROGRAM SHALL BE ESTABLISHED (NSS/GO 1740.9, 4.5)	E7. OMI V6B85 OUTLINES MAINTENANCE REQUIREMENTS INCLUDING LUBRICATION LOAD TESTS AND VISUAL INSPECTIONS G7. DEVELOPED UNDER G7 G8. DEVELOPED UNDER G8

SPACE SHUTTLE SYSTEM HAZARD ANALYSIS

PHASE/MODE FUNCTION: ZERO-G SIMULATOR FOR PAYLOAD BAY DOORS

ENGINEER: L. GLUSING

TASK/OPERATION OR FACILITY: OPF 1, 2, 3

DATE: 14 SEPTEMBER, 1990

SHEET 2 OF 3

HAZARDOUS CONDITION	HAZARD CAUSE	HAZARD EFFECT	SAFETY REQUIREMENTS	HAZARD ELIMINATION/ CONTROL PROVISIONS
G6. WIRE ROPE FAILS (CONT'D)	E8. WIRE ROPE DISCONNECTS FROM DRUM		E8. THE ROPE ENDS SHALL BE ANCHORED SECURELY. (NSS/GO 1740.9, 4.2.5d)	E8. PLACARD MOUNTED ON WINCH SUPPORT READS, "WARNING-WINCH MUST HAVE AT LEAST 4 WRAPS OF CABLE ON DRUM BEFORE LIFTING"
G7. TWO-BLOCKING OCCURS	E9. CONTROL FAILURE OF AIR DRIVER OR	G6. WIRE ROPE FAILS	E9. CONTROLS SHALL RETURN TO OFF POSITION UPON RELIEF OF PRESSURE (NSS/GO 1740.9, 4.2.7A)	E9. OMI V9023 REQUIRES THAT ALL OPERATORS ARE BRIEFED ON HAZARDS BEFORE OPERATION
	E10. OPERATOR ERROR		E10. ONLY CERTIFIED OPERATORS SHALL BE AUTHORIZED TO USE LIFTING DEVICES (NSS/GO 1740.9, 4.6)	E10. OMI V9023 REQUIRES THAT ONLY QUALIFIED PERSONNEL OPERATE WINCHES
G8. BACK-WINDING OCCURS	E11. CONTROL FAILURE OF AIR DRIVER OR	G6. WIRE ROPE FAILS	E11. CONTROLS SHALL RETURN TO OFF POSITION UPON RELIEF OF PRESSURE (NSS/GO 1740.9 4.2.7a)	E11, E12. OMI V9023 REQUIRES THAT ONLY QUALIFIED PERSONNEL OPERATE WINCHES. ALL PERSONNEL ARE BRIEFED ON HAZARDS BEFORE OPERATION.
	E12. OPERATOR ERROR		E12. ONLY CERTIFIED OPERATORS SHALL BE AUTHORIZED TO USE LIFTING DEVICES (NSS/GO 1740.9, 4.6)	-PLACARD MOUNTED ON WINCH SUPPORT READS, "WARNING-WINCH MUST HAVE AT LEAST 4 WRAPS OF CABLE ON DRUM BEFORE LIFTING"
G4. WINCH BRAKE FAILS	E3. DISK BRAKE FAILS OR E4. WORM GEAR FAILS TO HOLD LOAD	G1. LOAD DROPS	E3, E4. FOR CRITICAL HOISTS, TWO MEANS OF BRAKING SHALL BE CAPABLE OF BRINGING A RATED LOAD TO A STOP AND HOLDING IT (NSS/GO 1740.9, 4.2.5b)	E3, E4. PROOFLOAD OF 3480 LBS IS HELD FOR A MINIMUM OF THREE MINUTES FOR ANNUAL TEST (OMI V6B85) - REF CIL, FAILURE MODE 2
E1. BRIDGE IS MOVED WITH CABLE ATTACHED	OPERATOR ERROR	G0. PERSONNEL INJURY AND DAMAGE TO A VEHICLE SYSTEM		E1. PLACARD MOUNTED AT BRIDGE READS, "WARNING-VERIFY STEEL CABLES ARE DISCONNECTED FROM COUNTERWEIGHT BEFORE OPERATING" - OMI V9023 REQUIRES CSR #200 - OPF BRIDGE BUCKET OPERATOR

SPACE SHUTTLE SYSTEM HAZARD ANALYSIS

PHASE/MODE FUNCTION: ZERO-G SIMULATOR FOR PAYLOAD BAY DOORS

ENGINEER: L. GLUSING

TASK/OPERATION OR FACILITY: OPF 1, 2, 3

DATE: 14 SEPTEMBER, 1990

SHEET 3 OF 3

HAZARDOUS CONDITION	HAZARD CAUSE	HAZARD EFFECT	SAFETY REQUIREMENTS	HAZARD ELIMINATION/ CONTROL PROVISIONS
G2. PAYLOAD BAY DOOR MOTOR IS OVERLOADED	E13. PAYLOAD BAY DOOR MOTOR TORQUE LIMITER FAILS AND G9. COUNTERWEIGHT FAILS TO BALANCE WEIGHT OF DOORS	G0. PERSONNEL INJURY AND DAMAGE TO A VEHICLE SYSTEM		G9. DEVELOPED UNDER G9
G9. COUNTERWEIGHT FAILS TO BALANCE WEIGHT OF DOOR	E14. COUNTERWEIGHT BASKET CASTERS FAIL TO MOVE FREELY OR E15. OPERATOR ERROR	G2. PAYLOAD BAY DOOR MOTOR IS OVERLOADED		E14. OMI VB685 REQUIRES ANNUAL LUBRICATION OF ALL THREADS, BEARINGS AND SLIDING SURFACES E15. OMI V9023 PRE-OPERATION SETUP OUTLINES PROPER WEIGHT VALUE CONFIGURATION AND REQUIRES TAPE AND INTEGRITY SEAL ON COUNTERWEIGHT BASKET WITH TOTAL WEIGHT RECORDED

SAA09FTP3-006

5.0 SOFTWARE REVIEW

5.1 APPLICATION SET CONTROL LOGIC REVIEW

5.1.1 PREREQUISITE CONTROL LOGIC REVIEW. There is no Prerequisite Control Logic associated with the critical functions identified in section 2.4 for this system; therefore, no Prerequisite Control Logic Review is required.

5.1.2 REACTIVE CONTROL LOGIC REVIEW. There is no Reactive Control Logic associated with the critical functions identified in section 2.4 for this system; therefore, no Reactive Control Logic Review is required.

5.2 GROUND LAUNCH SEQUENCER REVIEW

There are no Ground Launch Sequencer requirements for the critical functions identified in section 2.4 for this system; therefore, no Ground Launch Sequencer Review is required.

5.3 LAUNCH COMMIT CRITERIA REVIEW

There are no Launch Commit Criteria requirements for the critical functions identified in section 2.4 for this system; therefore, no Launch Commit Criteria Review is required.

5.4 LPS/CCMS CONTROL FUNCTION ANALYSIS

The LPS/CCMS does not provide any control and monitor functions for the critical functions identified in section 2.4 for this system; therefore, no LPS/CCMS Control Function Analysis is required.

6.0 END-TO-END ANALYSIS

6.1 END-TO-END SYSTEM SUMMARY

The operation of the Horizontal Zero Gravity System is dependent upon the structural integrity of the Payload Bay Area Access Bridge (See figure 8). This is so, because most of the Horizontal Zero Gravity System Components and the Vehicle System Components it moves are, respectively, mounted on or hanging from the Payload Bay Area Access Bridge(s). The Program Model Number (PMN) for the Payload Bay Area Access Bridge is A70-0883 and A70-0883-01, with baseline 288.00 and reviewed by SAA09FY093-006 and SAA09FTP3-010. The Payload Bay Area Access Bridges are in turn supported by the Orbiter Main Access Platforms (structure) in the OPF High Bay with PMN A70-0668, A70-0668-03 and reviewed by SAA09FY093-007 and SAA09FY093-012.

The Zero-G System is dependent upon the VAB Utility Compressed Air System only when the cable is played out or reeled in, when the C-Frame is raised or lowered from storage, or when the counterweights are adjusted for operation. Air operated wrenches are used to power the winch at those times. Loss of the compressed air would cause loss of input torque from the air wrench. The disc

brake on the winch would then set and hold the load. The compressed air is not required when the Payload Bay Doors are opened/closed or when the radiators are deployed/stowed. The VAB Annex Utility Compressed Air System has PMN S72-0888 and is reviewed by SAA09GSP8-001.

A pneumatic wrench is used to provide power to the winch. The interface between the wrench and the winch is a hex or square drive adapter. The adapter requires the operator to hold the wrench in place for operation since it does not mount the wrench to the winch. In the event that the pneumatic wrench fails to stop when commanded, the operator can remove the wrench from the drive adapter or disengage the air hose quick disconnect, allowing the disc brake to set and hold the load.

The interface between the Horizontal Zero Gravity Simulators and the Orbiter Payload Bay Doors of their opening/closing are the Payload Bay Door Handling, Adapter and C-Frame Assemblies with PMN H70-0529 (RIC GSE).

The interface between the Horizontal Zero Gravity Simulators and the Orbiter Payload Bay Door Radiators for their deploying/stowing are the Payload Bay Door Radiator lifting fixtures with PMN H70-0666 (RIC GSE).

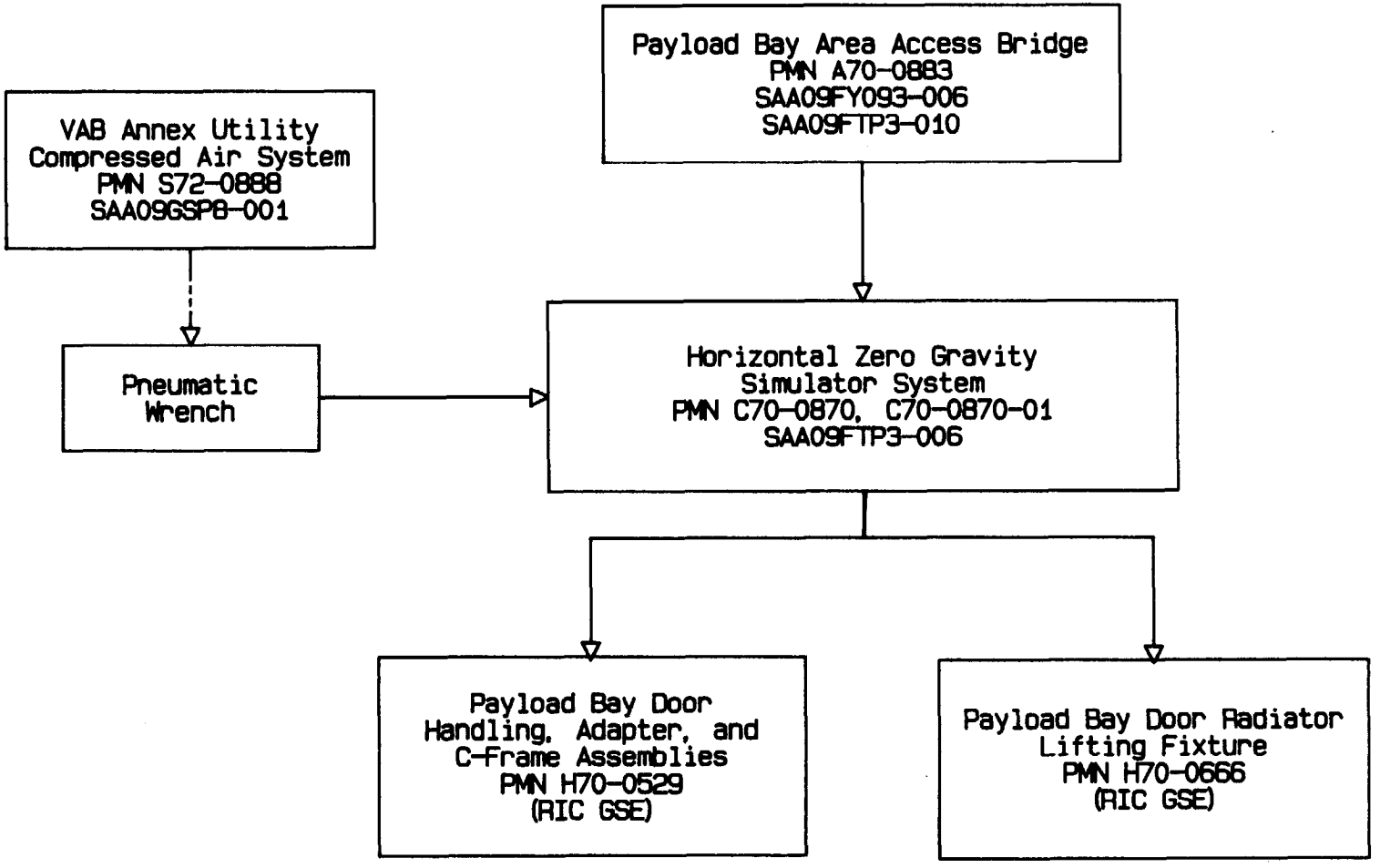

Figure 8. End-to-End System Analysis Block Diagram for the Horizontal Zero Gravity Simulator in the OPF.

6.2 AREAS OF CONCERN

The following areas of concern were identified during this analysis:

The Thern winches in high bays 1 and 2 use a set screw to attach the wire rope to the drum in violation of NSS/GO 1740.9 section 4.2.5d. A variance is not required for this condition providing that at least four wraps of wire rope remain on the drum at all times and that the set screw is properly torqued. The Thern cargo winches have a swaged ball end on the wire rope that prevents the wire rope from slipping through the mounting hole. This modification to the zero-g winches would eliminate this concern.

7.0 SNEAK CIRCUIT ANALYSIS

There was no Sneak Circuit Analysis performed on the critical output functions identified in section 2.4 for this system.

8.0 EMERGENCY SAFING ANALYSIS

There are no Emergency Safing Circuits associated with this system.

9.0 CRITICALITY CATEGORY 1R ITEMS

Improper performance or loss of any function in this system will not result in loss of life or vehicle; therefore, no Criticality Category 1R Analysis is required. See section 2.4 for additional information.