SAA09FT01-004
REV. A
AUGUST 1993

SYSTEM ASSURANCE ANALYSIS

OF THE

LINK BELT 250-TON

TRUCK CRANE HC-268

Baseline Number: 330.00

PMN: H72-1390

WUC: 99GKRLB000

SS/FC: 99

SYSTEM: CRITICAL

National Aeronautics and
Space Administration

John F. Kennedy Space Center

KSC FORM 16-12 (REV. 8/76) (C/G 8/91)

NOTICE - When Government drawings, specifications, or other data are used for any purpose other than in connection with a definitely related Government procurement operation, the United States Government thereby incurs no responsibility nor obligation whatsoever; and the fact that the Government may have formulated, furnished, or in any way supplied the said drawings, specifications or other data is not to be regarded by implication or otherwise as in any manner licensing the holder or any other person or corporation, or conveying any rights or permission to manufacture, use, or sell any patented invention that may in any way be related thereto.

APPLICATION		PART NO.	MF	REVISIONS			
NEXT ASSY	USED ON			SYM	DESCRIPTION	DATE	APPROVAL
				A	GENERAL REVISION AND 1R ANALYSIS PERFORMED. EO 1 INCORPORATED.	9/13/93	M.K. Groff

Prepared By: Bruce J Kalle 8/16/93
B. KALLE LSOC 52-11
RELIABILITY ENGINEER

Approval: Lisa M. Morgan 8/31/93
for J. JOYNER, RT-ENG

Concurrence: James Mulberry
J. MULBERRY LSOC 52-11
SYSTEM SAFETY ENGINEER

Approval: Emery W. Lamar 8/24/93
E. LAMAR, TE-FAC-2

Concurrence: Tony Shibly 8-16-93
T. SHIBLY, LSOC 32-20
SYSTEM DESIGN ENGINEER

Concurrence: D B Grant 8/25/93
D. GRANT, LSOC 33-43
SYSTEM ENGINEER

UNLESS OTHERWISE SPECIFIED DIMENSIONS ARE IN INCHES TOLERANCES ON FRACTIONS DECIMALS ANGLES	ORIGINAL DATE OF DRAWING 06-01-88	SYSTEM ASSURANCE ANALYSIS OF THE LINK BELT 250-TON TRUCK CRANE HC-268	JOHN F. KENNEDY SPACE CENTER, NASA
MATERIAL	DRAFTSMAN / CHECKER / TRACER / CHECKER / ENGINEER / ENGINEER: J.H. DICKINSON		KENNEDY SPACE CENTER FLORIDA
HEAT TREATMENT	SUBMITTED: F.M. HARPER	OMD BASELINE NO. 330.00	
FINAL PROTECTIVE FINISH	APPROVED: A.M. STEVENS	SCALE / UNIT WT	DWG SIZE A / SAA09FT01-004 / SHEET 1 OF 102

KSC FORM 21-2C (REV. 3/76) (C/G 8/91)

TABLE OF CONTENTS

1.0 SUMMARY OF FINDINGS AND RECOMMENDATIONS 5
1.1 SYSTEM CRITICALITY 5
1.2 MECHANICAL FMEA SUMMARY 5
1.3 ELECTRICAL FMEA SUMMARY 5
1.4 LPS CONTROL/MONITOR FUNCTIONS REVIEW SUMMARY 5
1.5 HAZARD ANALYSIS SUMMARY 5
1.6 FLEXHOSE FMEA SUMMARY 6
1.7 ORIFICE FMEA SUMMARY 6
1.8 FILTER FMEA SUMMARY 6
1.9 AREAS OF CONCERN SUMMARY 6
1.10 SNEAK CIRCUIT ANALYSIS SUMMARY 6
1.11 RECOMMENDATIONS 6
1.12 CRITICALITY CATEGORY 1R ITEMS SUMMARY 6

2.0 SYSTEM BASELINE/GROUND RULES/DEFINITIONS/DOCUMENTATION 6
2.1 SYSTEM BASELINE 6
2.2 GROUND RULES 6
2.3 DEFINITIONS OF CRITICALITY AND HAZARD CATEGORIES 9
2.3.1 Criticality Definitions and Categories. 9
2.3.2 Hazard Definitions and Categories. 11
2.4 DOCUMENTATION LIST 12

3.0 SYSTEM DESCRIPTION 13
3.1 MAIN HOIST SYSTEM 13
3.2 SWING SYSTEM 14
3.3 BOOM HOIST SYSTEM 14
3.4 TORQUE CONVERTER 14
3.5 HYDRAULIC OUTRIGGERS 14

4.0 CRITICALITY ASSESSMENT 18

5.0 FAILURE MODES AND EFFECTS ANALYSIS (FMEA) 22
5.1 MECHANICAL FMEA 22
5.2 ELECTRICAL FMEA 53
5.3 FLEXHOSE FMEA 58
5.4 ORIFICE FMEA 59
5.5 FILTER FMEA 59

6.0 CRITICAL ITEMS LIST 62

7.0 HAZARD ANALYSIS 62
7.1 SAFETY CRITICALITY ASSESSMENT 62
7.2 SCOPE 62
7.3 SUMMARY OF ANALYSIS 62
7.4 FAULT TREE ANALYSIS 78
7.5 HAZARD ANALYSIS WORKSHEETS 85

8.0 LPS CONTROL/MONITOR FUNCTIONS REVIEW 93
8.1 APPLICATION SET CONTROL LOGIC REVIEW 93
8.1.1 Prerequisite Control Logic Review. 93
8.1.2 Reactive Control Logic Review. 93
8.2 LAUNCH COMMIT CRITERIA AND GROUND LAUNCH SEQUENCER REVIEW 93
8.3 LPS/CCMS CONTROL FUNCTION ANALYSIS 93

9.0 END-TO-END ANALYSIS 93

10.0 SNEAK CIRCUIT ANALYSIS 95

11.0 EMERGENCY SAFING ANALYSIS 95

12.0 CRITICALITY CATEGORY 1R ANALYSIS 95
12.1 RELIABILITY BLOCK DIAGRAM 95
12.2 CRITICALITY CATEGORY 1R ITEMS 99

13.0 AREAS OF CONCERN 102

LIST OF ILLUSTRATIONS

1. ORBITER MATING WIND CONSTRAINTS 8
2. LINK BELT MOBILE CRANE, MODEL HC-268 15
3. LINK BELT MOBILE CRANE IN TYPICAL MATING CONFIGURATION 16
4. UPPER CRANE ASSEMBLY BLOCK DIAGRAM 17
5. SYSTEM FUNCTIONS BLOCK DIAGRAM OF THE 250-TON LINK BELT 19
6. OUTRIGGER HYDRAULIC SCHEMATIC 25
7. CONTROL SUPPLY, POWER PACK ASSY. HYDRAULIC SCHEMATIC 32
8. UPPER CRANE BOOM HOIST HYDRAULIC SCHEMATIC 39
9. UPPER CRANE SWING SUBSYSTEM HYDRAULIC SCHEMATIC 43
10. UPPER CRANE FRONT/REAR DRUM HYDRAULIC SCHEMATIC 46
11. End-To-End Block Diagram of The 250-TON LINK-BELT TRUCK CRANE 94
12. Reliability Block Diagram, Upper Works 96
13. Reliability Block Diagram, Upper Works (Continued) 97
14. Reliability Block Diagram, Lower Carrier 98

LIST OF TABLES

1. Hazards Identified 5
2. System Documentation List 12
3. SYSTEM CRITICALITY ASSESSMENT SUMMARY 20
4. Mechanical Passive Item List 23
5. MECHANICAL FMEA - LOWER CARRIER ASSEMBLY POWER PLANT 24
6. MECHANICAL FMEA - LOWER CARRIER ASSEMBLY OUTRIGGER SYSTEM 26
7. MECHANICAL FMEA - CONTROL SUPPLY, POWER PACK ASSY. HYDRAULICS . . . 33
8. MECHANICAL FMEA - UPPER CRANE ASSY POWER TRAIN 37
9. MECHANICAL FMEA - UPPER CRANE BOOM HOIST SYSTEM 40

10. MECHANICAL FMEA - UPPER CRANE SWING SUBSYSTEM 44
11. MECHANICAL FMEA - UPPER CRANE FRONT/REAR MAIN HOISTS 47
12. ELECTRICAL FMEA - UPPER ELECTRICAL SYSTEMS 55
13. FILTER FMEA - LOWER HYDRAULIC OUTRIGGERS 60
14. FILTER FMEA - UPPER HYDRAULIC SYSTEM 61
15. HAZARD ANALYSIS WORKSHEETS 86
16. Interfacing System Loss Assessment 93
17. CRITICALITY CATEGORY 1R ITEMS SUMMARY 100

1.0 SUMMARY OF FINDINGS AND RECOMMENDATIONS

1.1 SYSTEM CRITICALITY

The Link-Belt 250-Ton Truck Crane is assessed as critical. Failure of the system to support the load during lifting operations could cause loss of life and/or vehicle. See section 4.0 for additional information.

1.2 MECHANICAL FMEA SUMMARY

There were no mechanical Critical Items identified in the critical functions assessed in section 4.0 for this system. See section 5.1 for additional information.

1.3 ELECTRICAL FMEA SUMMARY

There were no electrical Critical Items identified in the critical functions assessed in section 4.0 for this system. See section 5.2 for additional information.

1.4 LPS CONTROL/MONITOR FUNCTIONS REVIEW SUMMARY

There are no LPS control/monitor functions associated with this system.

1.5 HAZARD ANALYSIS SUMMARY

A list of applicable hazard reports has been developed from: 1) A search of the KSC/RT Hazard Database for existing, baselined hazards; and 2) New hazard reports generated as a product of this analysis. Copies of all applicable hazard reports are attached. There were three hazards identified during this analysis.

Table 1. **Hazards Identified**

Identification	Description	Classification
SAA05MH43-003 H01	Truck Crane May Topple While Lifting Flight Hardware	Controlled
SAA05MH43-003 H02	The Demag TC-4000 Truck Crane Operations Result in Orbiter Damage While Lifting at a Contingency Landing Site Because of Excessive Winds	Accepted Risk
RT-ENG-1019	Personnel Required to Perform Work While Beneath Suspended Loads During Flight Hardware Processing at KSC/DFRF/CLS	Accepted Risk

1.6 FLEXHOSE FMEA SUMMARY

There were no critical flexhoses identified in the critical functions assessed in section 4.0 for this system. See section 5.3 for additional information.

1.7 ORIFICE FMEA SUMMARY

There are no orifices associated with this system.

1.8 FILTER FMEA SUMMARY

There were no critical filters identified in the critical functions assessed in section 4.0 for this system.

1.9 AREAS OF CONCERN SUMMARY

There were no Areas of Concern identified with this system.

1.10 SNEAK CIRCUIT ANALYSIS SUMMARY

There was no Sneak Circuit Analysis performed on this system.

1.11 RECOMMENDATIONS

This system has been designed in accordance with NSTS 07700 Vol. X and meets the GSE "fail safe" requirement of paragraph 3.5.1.2.1.1. No changes are required or recommended for this system.

1.12 CRITICALITY CATEGORY 1R ITEMS SUMMARY

There were ten criticality category 1R items identified in the critical functions assessed in section 4.0 for this system. See section 12.0 for additional information.

2.0 SYSTEM BASELINE/GROUND RULES/DEFINITIONS/DOCUMENTATION

2.1 SYSTEM BASELINE

This system is baselined for STS by 79K09579, "KSC Facilities, Systems, and Equipment Organizational Level OMD Baseline," dated 7/1/93. The OMD Baseline Number is 330.00.

2.2 GROUND RULES

This analysis has been developed in accordance with NSTS 22206, Rev. C, "Requirements for Preparation and Approval of Failure Modes and Effects Analysis (FMEA) and Critical Items List (CIL)."

The following additional ground rules and assumptions were used during this analysis.

a. Operator error will not be considered in the FMEA. It is assumed that the operator is trained and will take appropriate corrective action in an emergency situation.

b. Crane will cease CLS mating operations when wind exceeds the velocities indicated in Figure 1.

c. The outrigger jacks are deployed during pre-operational set up. Once seated the holding valves do not reopen until operations are terminated and the jacks retracted. Outrigger holding valve leakage severe enough to compromise stability would be detected at this time terminating further operations.

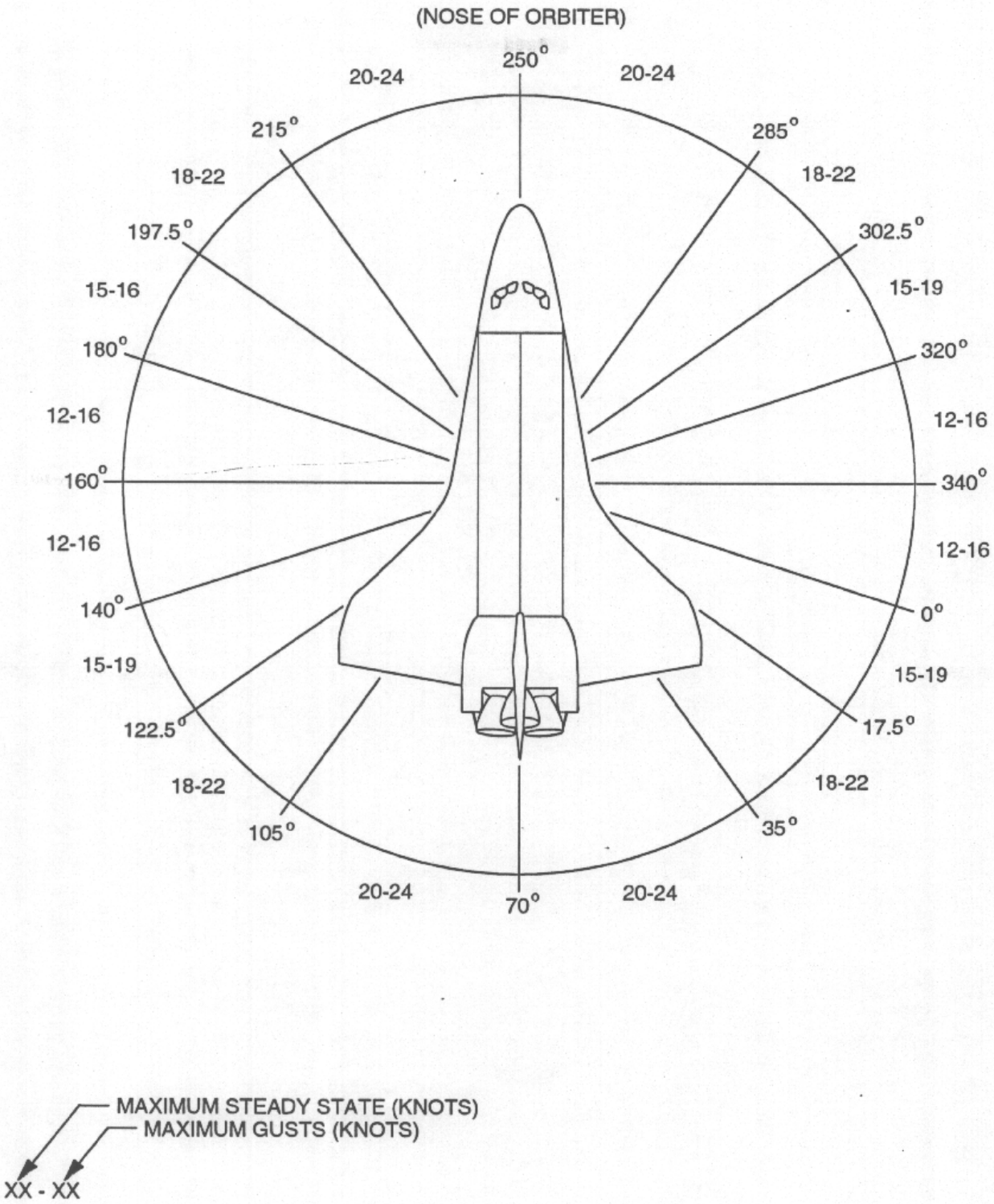

FIGURE 1. ORBITER MATING WIND CONSTRAINTS

2.3 DEFINITIONS OF CRITICALITY AND HAZARD CATEGORIES

The following criticality and hazard categories were used throughout this analysis.

2.3.1 Criticality Definitions and Categories. Criticality definitions and categories are defined as follows:

Category	Definitions
1	Single failure which could result in loss of life or vehicle.
1R	Two hardware items, which if failed, could result in loss of life or vehicle.
1S	Single failure in a safety or hazard monitoring system that could cause the system to fail to detect, combat, or operate when needed during the existence of a hazardous condition and could result in loss of life or vehicle.
2	Single failure that could result in loss (damage) of a vehicle system.
3	All others.

Cause - Major reason or event that produces a failure mode.

Component - A combination of parts, devices, and structures, usually self contained, which perform a distinctive function in the operation of the overall equipment. A "black box" (e.g., transmitter, power supply, cryogenic pump, filter assembly).

Correcting Action - An identification of actions, automatic or manual, which could be taken to mitigate the effect of failure.

Critical System - Ground Support Equipment/Facility Systems (GSE) is assessed as critical if loss of overall system function or improper performance of a system function could result in the loss of life, loss of vehicle, or loss (damage) of a vehicle system.

Critical Item - A critical item is defined as a Criticality Category 1, 1S, or 2 Single Failure Point or a redundant hardware item where the second failure results in loss of life or vehicle and the item is not capable of checkout prior to use.

Criticality Assessment - An analysis of each system function to determine if loss or improper performance of the function could result in loss of life, vehicle, and/or loss (damage) of a vehicle system without regard to redundancy.

Fail Safe - The ability to sustain a failure without causing loss of life/vehicle or damage to a vehicle system. (Includes the capability to safe the systems and successfully terminate operations).

Failure - The inability of a system, subsystem, component, or part to perform its required function within specified limits, under specified conditions for a specified duration.

Failure Mode - A description of the manner in which an item can fail.

Function - The activity or operation that a part, component, or system must perform to accomplish its intended purpose.

Interface - The point or area where a relationship exists between two or more parts, systems, programs, persons, or procedures wherein physical and/or functional compatibility is required.

Like Redundancy - Identical hardware items performing the same function.

Redundancy Screens - The following screens will be evaluated for all identified criticality category 1R items.

Screen A - The redundant item is capable of being checked and verified prior to use.

Screen B - Loss of the redundant item is readily detectable by the ground crew. (This screen is not applicable to standby redundancy.)

Screen C - Loss of all redundant items cannot result from a single credible cause, such as contamination.

Line Replaceable Unit (LRU) - An item whose replacement constitutes the optimum organizational maintenance repair action for a higher indenture item, i.e., any assembly which can be removed and replaced as a unit from the system at the operating location.

Loss (Damage) of Vehicle System - Loss of the capability to provide the level of system performance required for normal or emergency operations.

Operational Redundancy - Redundant elements, all of which are fully energized during the subsystem operating cycle. Operational redundancy includes load sharing redundancy wherein redundant elements are connected in such a manner that, upon failure of one unit, the remaining redundant elements will continue to perform the subsystem function. Switching out the failed element is not required.

Passive Component - A component that may be necessary to the performance or structural integrity of the system but has no active function.

Prerequisite Control Logic - GSE software program logic that assures proper sequence of commands.

Reactive Control Logic - GSE software program logic that assures automatic reaction to indicated failures.

Safety or Hazard Monitoring System - A system whose function is to detect, combat, or operate when needed during a hazardous condition which has occurred because of prior failures or events.

Standby Redundancy - Redundant hardware items that are nonoperative until they are switched into the subsystem upon failure of the primary items. Switching can be accomplished by either automatic or manual means.

Unlike Redundancy - Non-identical items performing the same function.

2.3.2 Hazard Definitions and Categories. Hazard definitions and categories are defined as follows:

Hazard - The presence of a potential risk situation caused by an unsafe act or condition.

Hazard Analysis - The determination of potential sources of danger and recommended resolutions in a timely manner for those conditions found in either the hardware/software systems, the person-machine relationship, or both, which cause loss of personnel capability, loss of system, or loss of life or injury to the public.

Hazard Report Closure Classification.

a. Eliminated Hazard - A hazard that has been eliminated by removing the hazard source or by deleting the hazardous operations.

b. Controlled Hazard - The likelihood of occurrence has been reduced to an acceptable level by implementing the appropriate hazard reduction precedence sequence to comply with program requirements.

c. Accepted Risk - Hazard which has not been counteracted by redundancy purge provisions, appropriate safety factors, containment/isolation provision, backup system/operation, safety devices, alarm/caution and warning devices, or special automatic/manual procedures. Catastrophic hazards, critical hazards, hazards resulting from failure to meet program requirements, and Single Failure Points (SFPs) in emergency systems will be documented. A hazard will be classified as an "accepted risk" only after (1) all reasonable risk avoidance measures have been identified, studied, and documented; (2) project/program management has made a decision to accept the risk on the basis of documented risk acceptance rationale; and (3) Safety management has concurred in the accepted risk rationale.

Severity Level - Should the hazard occur, its worst case severity would be:

a. Catastrophic - Hazard could result in a mishap causing fatal injury to personnel, and/or loss of one or more major elements of the flight vehicle or ground facility.

b. Critical - Hazard could result in serious injury to personnel, and/or damage to flight or ground equipment which would cause mission abort or a significant program delay (one or more days).

c. Marginal - Hazard could result in a mishap of minor nature inflicting first-aid injury to personnel, and/or damage to flight or ground equipment which can be tolerated without abort or repaired without significant program delay (less than one day).

Hazard Report Status.

a. Closed - Corrective action to eliminate or control the hazard is completed, evaluated, and verified and management actions to accept the safety risks are completed. Actions taken, organization which performed actions and completion dates are to be documented in this data element.

b. Open - Corrective action evaluation and verification is in progress. The status shall remain open until management has reviewed the actions taken and accepted the safety

risk. Actions required, organization responsible for performing the actions and due dates are to be documented in this data element.

2.4 DOCUMENTATION LIST

The following documents were used in completing this analysis:

Table 2 (Page 1 of 2). **System Documentation List**

Document/Drawing No.	Rev.	Outstanding EO Numbers	Title
NSTS 22206	C	-	Requirements for Preparation and Approval of Failure Modes and Effects Analysis (FMEA) and Critical Items List (CIL)
NSTS 22254	A	-	Methodology for Conduct of NSTS Hazard Analyses
NSS/GO-1740.9B	-	-	NASA Safety Standard for Lifting Devices and Equipment
Book No. 653	NA	NA	Model HC-268 Operators and Maintenance Manual (Link-Belt)
Book No. 654	NA	NA	Model HC-268 Parts Manual (Link-Belt)
28A3314-D	Basic	NA	Hydraulic Schematic
28J3353-E	B	NA	HC-268 Hyd. Schematic w/Hydrostatic Swing 8 B.H.
28R0050-E	Basic	NA	HC-268 Upper Wiring Diagram
28A3397-D	Basic	NA	Carrier Wiring Diagram
1910.180	07/01/87	NA	Code of Federal Regulations Labors (OSHA)
ASME/ANSI 30.5-1989	-	-	Mobile and Locomotive Cranes
80K51760	-	-	Yundum Airport, Banjul, The Gambia: Orbiter Mate/Demate and Payload Handling Fixture Installation
80K51474	A	-	Ben Guerir AFB, Morocco, Orbiter Mate/Demate and Payload Handling Fixture Installation
80K51804	-	-	White Sands Missile Range, New Mexico, Orbiter Mate/Demate Installation

Table 2 (Page 2 of 2). **System Documentation List**

Document/Drawing No.	Rev.	Outstanding EO Numbers	Title
OMI S5044	E	-	Post Landing Deservicing / Mate to SCA - CLS
OMI Q3506	Basic		Orbiter Mate/Demate Mobile Crane Operation
OMI Q3205	D	-	Operation of Mobile Cranes
SAA09FT01-011	A	1	System Assurance Analysis of the Manual Hydra-set Linear Positioning Instruments
SAR 294-400-85-176	-	-	Safety Analysis Report Submittal H70-0743-1, -2, -3
SAR 294-400-85-100	-	-	Safety Analysis Report Submittal H70-0790

3.0 SYSTEM DESCRIPTION

The Link-Belt Mobile Crane, model HC-268, is used at KSC for general lifting operations in support of the Shuttle program. It is also designated for use at Contingency Landing Sites (CLS) for Orbiter / Shuttle Carrier Aircraft (SCA) mate and Payload recovery. The crane consists of a stationary lower structure for travel, powered by one of two General Motors diesel engines, and rotating upperworks which mounts a boom hoist. The upperworks contains a boom hoist for raising and lowering the boom, two independent main hoists for lifting and lowering the load, and a swing system for rotating the cab and boom. Power for these operations comes from the other General Motors diesel engine. Except where noted, operator controls are manually operated hydraulic valves with mechanical linkages. For leveling and stability, the crane uses five hydraulic outriggers. (Reference Figures 2 & 3).

3.1 MAIN HOIST SYSTEM

The main hoist system lifts and lowers the load which is suspended on wire rope extending from the tip of the boom. The system has two independent rotating drums, front and rear, each with its own brakes and clutches. The brakes and clutches are manually controlled, and brake linkages are mechanical and/or hydraulic however, clutches are engaged by hydraulic pressure and disengaged by spring action. Power to each drum comes from the torque converter by way of a chain connected to a chain sprocket attached to the reduction shaft. The output of the reduction shaft is split between a gear on one side of the rear drum and a counter shaft. The counter shaft rotates opposite the reduction shaft and drives a gear on the other end of the rear drum. (The gears on each drum rotate in opposite directions, providing power in either direction.) The forward drum has two gears corresponding to, and meshing with, the two rear drum gears. (Reference Figure 4.)

The Main Hoist Brake System is comprised of three fixed position calipers and one disc mounted on each drum. One caliper on each hoist is are operator controlled. The other caliper is released with hydraulic pressure and is spring activated. The spring activated calipers release when system hydraulic pressure exceeds 1450 PSI. They will apply when hydraulic pressure is lost in the upperworks system and during shutdown. Each drum employs a pawl ratchet as a third brake device. The pawl ratchet assembly is controlled by spring and cylinder action. The operator controls cylinder activated release of the pawl. The rear drum is equipped with a planetary gear which provides dual hoisting speeds. The operator can effectively lower or brake a load through clutch operation to allow a "controlled" slippage or lowering of the load. The load can also be lowered by gravity using the brake or by the torque converter (high precision for heavy loads).

3.2 SWING SYSTEM

The swing system rotates the crane in either direction by a driving swing pinion which engages a stationary ring gear. The ring gear is mounted on the truck chassis. A manually operated hydraulic valve controls left or right direction of swing. The swing brake is activated by a separate manually operated hydraulic valve. Mechanically linked swing brake is mounted on the swing pinion shaft. A mechanical lock engages the swing gear to fix the rotating bed in position following a swing movement. Swing system power is received from the torque converter through a power take off driven pump and a hydraulic motor system. (Reference Figure 4.)

3.3 BOOM HOIST SYSTEM

The boom hoist lifts and lowers the boom by a wire rope which extends from the boom drums, through the gantry sheaves, and to the pendant block sheaves. The system consists of a rotating drum driven by a hydraulic motor and pump assembly powered via a power take off from the torque converter. The Boom Hoist brake system is comprised of three independent brakes. The main brake is a spring applied disc assembly. A drum pawl is used to hold the drum and is controlled by the operator. The third brake is integral to the boom planetary winch drive and is hydraulically released and spring applied. A hydraulic cylinder controlled by a manual valve is used to pull the pins from the foot of the boom to facilitate boom removal. (Reference Figure 4.)

3.4 TORQUE CONVERTER

Power for boom, swing, and hoist operations is provided by the fluid torque converter driven by a GM diesel engine. (Reference Figure 4.)

3.5 HYDRAULIC OUTRIGGERS

Five hydraulic jacks, one front bumper and four outrigger beam mounted, provide stability and leveling for the crane and lower carrier vehicle allowing 360° operations. The outrigger hydraulic system is powered by a pump attached to the carrier transmission. The outrigger system has one vertical bumper mounted cylinder assembly and four independent (vertical) cylinder assemblies mounted on separate extendable beams. Each beam can be extended or retracted by a manually operated hydraulic valve dedicated to each beam cylinder. Each vertical cylinder assembly(s) is operated by a manually controlled hydraulic valve for each cylinder assembly. There are four hydraulic cylinders controlled by manual valves which are used to pull the outrigger beam pins to facilitate beam removal from the carrier.

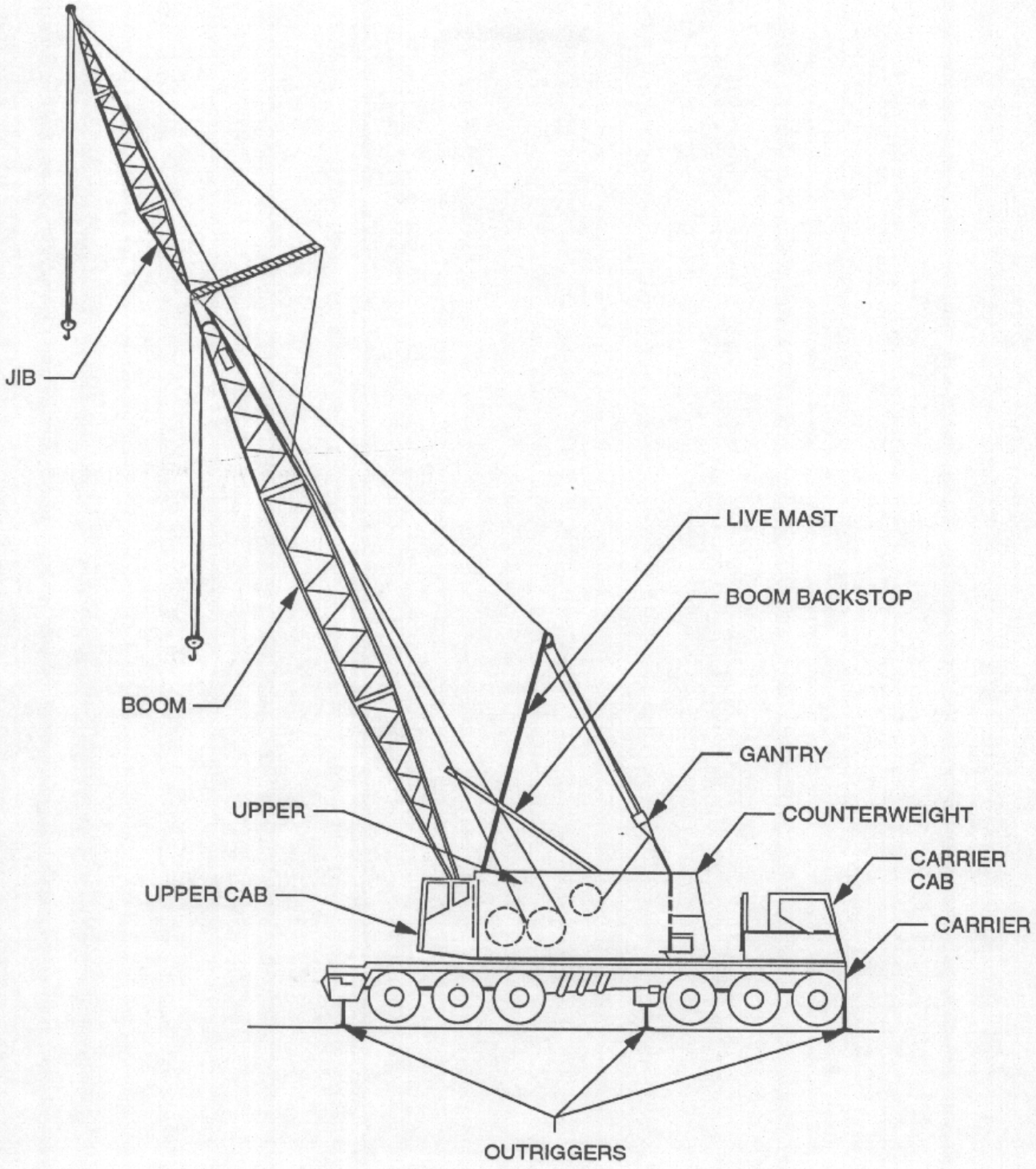

FIGURE 2. LINK BELT MOBILE CRANE, MODEL HC-268

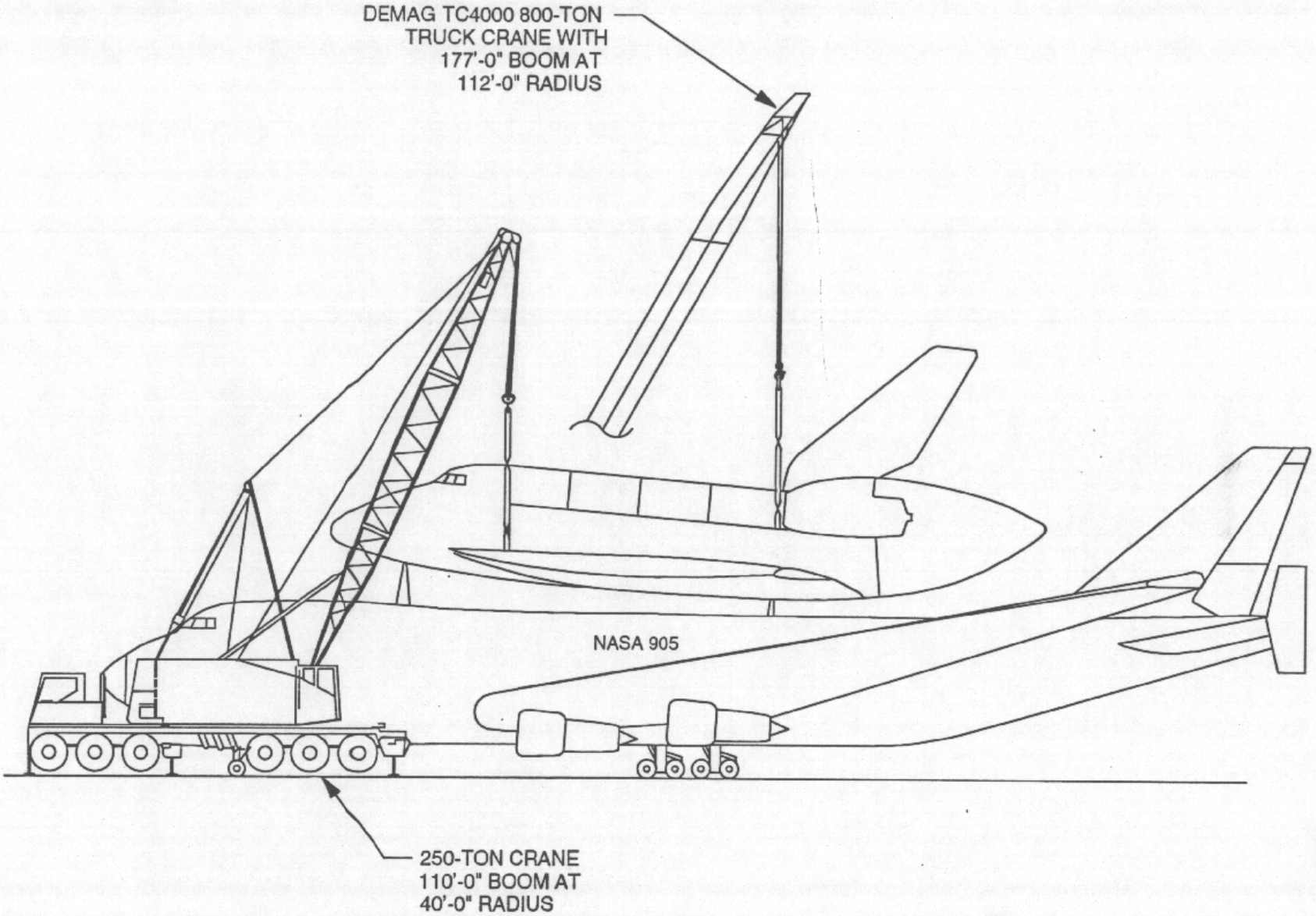

FIGURE 3. LINK BELT MOBILE CRANE IN TYPICAL MATING CONFIGURATION

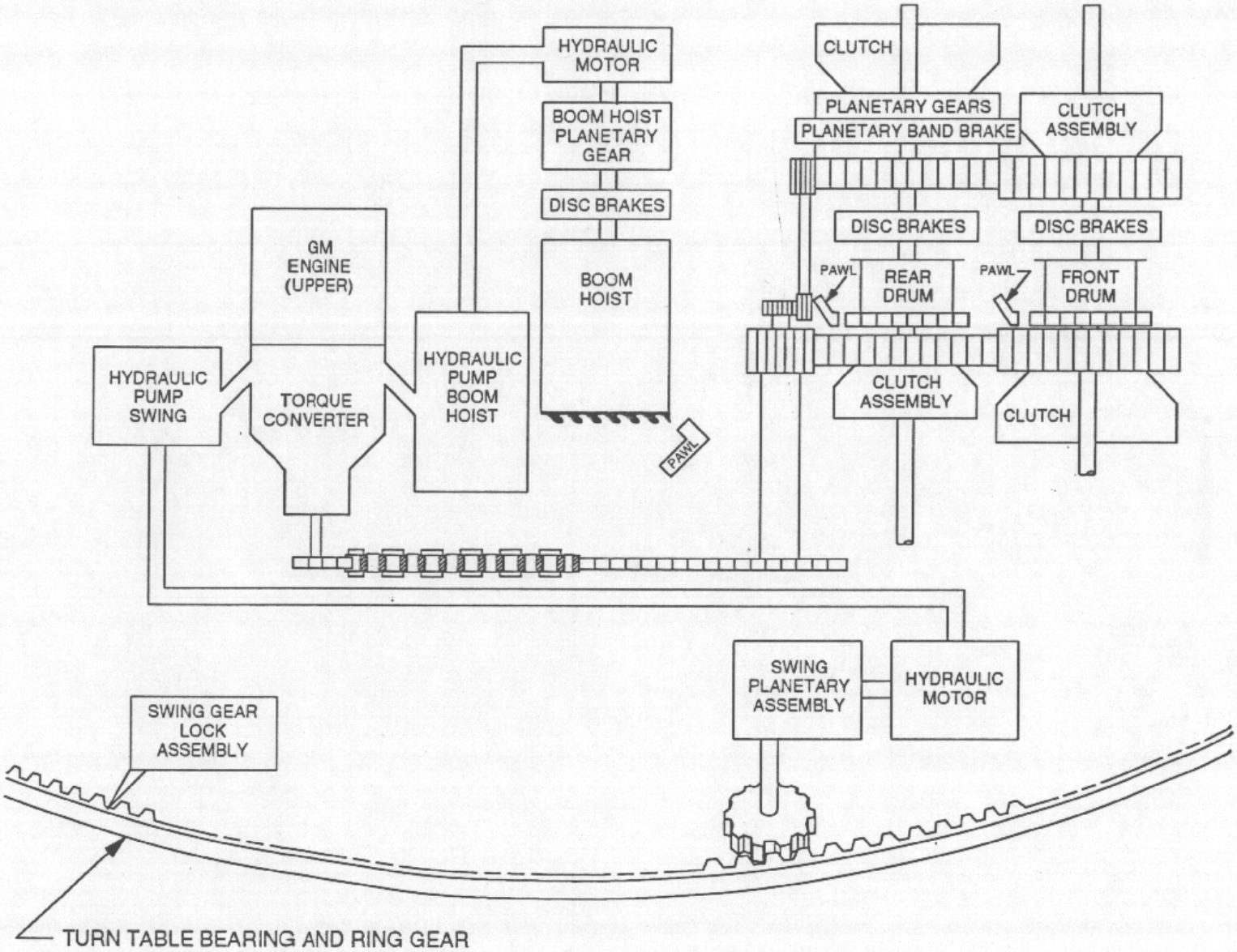

FIGURE 4. UPPER CRANE ASSEMBLY BLOCK DIAGRAM

4.0 CRITICALITY ASSESSMENT

The system functions are identified in figure 6, System Functions Block Diagram, and assessed on the following System Criticality Assessment Summary Sheets (Worksheet 5122-002).

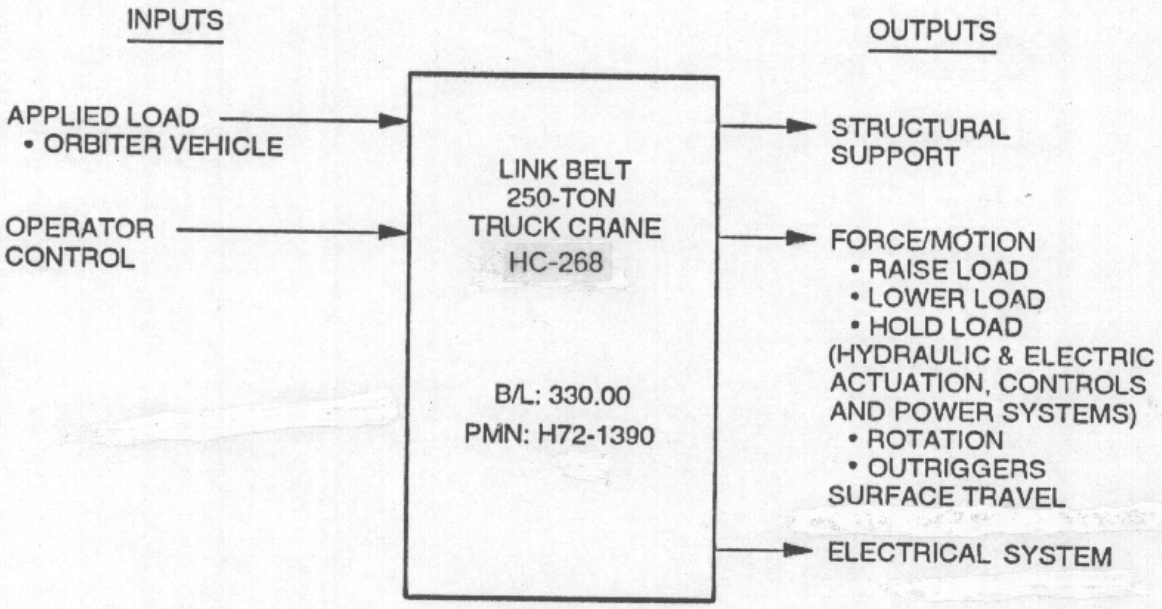

FIGURE 5. SYSTEM FUNCTIONS BLOCK DIAGRAM OF THE 250-TON LINK BELT

Table 3 (Page 1 of 2). **SYSTEM CRITICALITY ASSESSMENT SUMMARY**

Program Model Number H72-1390
Baseline Number 330.00

System/Subsystem 250-TON LINK-BELT TRUCK CRANE
Location MULTIPLE

Station Set/Facility Code 99
Date AUGUST 1993
Prepared By B. KALLE, LSOC 52-11

INPUT/OUTPUT	FUNCTION	TIME PERIOD	EFFECT OF LOSS/FAILURE IF: a. FAILS TO OPERATE ON TIME b. FAILS TO CEASE OPERATION ON TIME c. FAILS DURING OPERATION d. PREMATURELY OPERATES	CRIT/ NONCRIT	NOTES
INPUTS					
APPLIED LOAD		DURING LIFTING/ MATING OPERATIONS	a. NA b. NA c. NA d. NA	a. NA b. NA c. NA d. NA	THE LOAD IS INDEPENDENT OF THE CRANE, FMEA ANALYSIS OF THE LOAD IS NOT REQUIRED.
OPERATOR CONTROL	THE OPERATOR PROVIDES THE MEANS TO DIRECT THE OPERATION OF THE CRANE THROUGH THE CONTROL LEVERS AND SWITCHES.	DURING CRANE PREPARA-TIONS AND LIFTING/ MATING OPERATIONS	a. NA b. COULD ALLOW THE LOAD/ORBITER TO MAKE CONTACT WITH AN OBSTRUCTION/SCA BEFORE PROPER ALIGNMENT IS OBTAINED AND MAY CAUSE DAMAGE TO THE LOAD/ ORBITER OR SCA. c. NA d. NA	a. NA b. C c. NA d. NA	a. NA b. HUMAN ERROR REQUIRED. SEE HAZARD ANALYSIS SECTION 7.0 c. NA d. NA
OUTPUTS					
STRUCTURAL SUPPORT	PROVIDE THE SUPPORT TO HOLD THE SUSPENDED LOAD/ORBITER VEHICLE	DURING LIFTING/MATING OPERATIONS	a. NA b. NA c. FAILURE DURING OPERATION WOULD ALLOW THE LOAD/ORBITER TO DROP AND COULD CAUSE LOSS OF LIFE AND/OR LOSS OF THE ORBITER VEHICLE. d. NA	a. NA b. NA c. C d. NA	a. NA b. NA c. STRUCTURAL SUPPORT IS ASSESSED AS A PASSIVE ELEMENT, THEREFORE PER NSTS 22206, REV C, PARAGRAPH 4.4.1, A FMEA IS NOT REQUIRED. d. NA

Table 3 (Page 2 of 2). **SYSTEM CRITICALITY ASSESSMENT SUMMARY**

Program Model Number H72-1390
Baseline Number 330.00

System/Subsystem 250-TON LINK-BELT TRUCK CRANE
Location MULTIPLE

Station Set/Facility Code 99
Date AUGUST 1993
Prepared By B. KALLE, LSOC 52-11

INPUT/OUTPUT	FUNCTION	TIME PERIOD	EFFECT OF LOSS/FAILURE IF: a. FAILS TO OPERATE ON TIME b. FAILS TO CEASE OPERATION ON TIME c. FAILS DURING OPERATION d. PREMATURELY OPERATES	CRIT/ NONCRIT	NOTES
FORCE/MOTION -RAISE/LOWER LOAD -HOLD LOAD -ROTATION (HYDRAULIC ACTUATION, CONTROLS AND POWER SYSTEM)	PROVIDES THE MEANS TO OPERATE THE THREE HOISTS ON THE CRANE TO MOVE THE BOOMS AND RAISE/LOWER THE LOAD.	DURING LIFTING/MATING OPERATIONS	a. NA b. COULD ALLOW THE LOAD/ORBITER TO BE RAISED TOO HIGH, CAUSING TWO BLOCKING OF THE CRANE HOOK, OR COULD LOWER THE LOAD/ORBITER ONTO AN OBSTRUCTION/SCA BEFORE PROPER ALIGNMENT HAS BEEN OBTAINED. EITHER CASE COULD CAUSE LOSS OF LIFE OR LOSS (DAMAGE) OF THE LOAD/ORBITER VEHICLE. c. FAILURE OF THE HYDRAULIC SYSTEM DURING OPERATION WOULD CAUSE THE SPRING APPLIED DISC BRAKES TO SET, HOLDING THE LOAD/ORBITER IN POSITION. d. NA	a. NA b. C c. NC d. NA	a. NA b. SEE FMEA c. NONE d. NA
-OUTRIGGERS	PROVIDES A STABLE, LEVEL HOISTING PLATFORM FOR THE LOAD.	DURING LIFTING/ MATING OPERATIONS	a. NA b. NA c. FAILURE OF AN OUTRIGGER COULD ALLOW THE LOAD TO SHIFT AND/OR THE CRANE TO TOPPLE. COULD CAUSE LOSS OF LIFE AND/OR LOSS OF ORBITER AND SCA. d. NA	a. NA b. NA c. C d. NA	a. NA b. NA c. SEE FMEA AND GROUND RULE 2.2.c. d. NA
-SURFACE TRAVEL	PROVIDES THE CAPABILITY TO MOVE THE CRANE TO THE JOB SITE.	PREPARATION AND SETUP	a. NA b. NA c. UNABLE TO GET CRANE TO WORK SITE. DELAY OF OPERATION. d. NA	a. NA b. NA c. NC d. NA	
ELECTRICAL SYSTEM	PROVIDES POWER FOR LIGHTS, FANS, DIESEL STARTERS. OPERATES SOLENOID VALVES.	DURING LIFTING/ MATING OPERATIONS	a. NA b. NO EFFECT. c. CRANE SYSTEMS ARE DISABLED. DELAY OF OPERATIONS. d. NA	a. NA b. NC c. C d. NA	a. NONE b. NONE c. USED TO ENABLE/DISABLE UPPER CRANE HYDRAULICS AND BOOM OVER TRAVEL LIMIT. d. NA

5.0 FAILURE MODES AND EFFECTS ANALYSIS (FMEA)

5.1 MECHANICAL FMEA

The mechanical components of the critical functions assessed in section 4.0 for this system were identified from the documents and diagrams referenced in the Documentation List and are depicted on the following figure(s) and analyzed in the associated Mechanical FMEA (Worksheet 5122-003). A passive items list precedes the Mechanical FMEA and is shown on the following page (Worksheet 5122-004).

MECHANICAL FAILURE MODES AND EFFECTS ANALYSIS

FOR THE

LINK-BELT 250-TON HC-268 TRUCK CRANE

PMN: H72-1390

The following components or category of components were considered passive in the analysis for this system.

Table 4. **Mechanical Passive Item List**

Find Number	Nomenclature
None	Load Hook Block
None	Main Hoist Rope & Sheaves
None	Main Boom
None	Main Hoist Drums
None	Jib Boom
None	Boom Guy Ropes
None	Gantry
None	Boom Rope & Sheaves
None	Boom Hoist Drum
None	Hydraulic Hard Lines
None	Carrier Structure
None	Upper Structure
None	Outrigger Beam Structure
None	Jack Shaft Assy.
None	Long Counter Shaft Assy.

Table 5. **MECHANICAL FMEA - LOWER CARRIER ASSEMBLY POWER PLANT**

System LINK BELT 250-TON TRUCK CRANE
Subsystem LOWER CARRIER ASSEMBLY POWER PLANT
Drawing No. BOOK #654 **Sheet No.** NA
PMN H72-1390

Program SPACE SHUTTLE

Station Set/Facility Code 99
Date AUGUST 1993
Reference Figure Used NONE
Prepared By B. KALLE, LSOC 52-11

FIND NO. PART NO.	PART NAME	PART FUNCTION	a. FAILURE MODE b. CAUSE c. FMN d. DETECTION METHOD e. CORRECTING ACTION f. TIME TO EFFECT g. TIMEFRAME	FAILURE EFFECT ON SYSTEM PERFORMANCE	FAILURE EFFECT ON VEHICLE SYSTEMS AND/OR PERSONNEL SAFETY	CRIT CAT
01-063-169.00	ENGINE ASSY. (GM)	PROVIDES ALL OPERATING POWER TO SYSTEMS ASSOCIATED WITH THE LOWER CARRIER ASSEMBLY.	a. INOPERATIVE	ALL LOWER CARRIER SYSTEMS INOPERATIVE (EXCEPT ELECTRICAL). DELAY FOR REPAIRS.	NO EFFECT.	3
01-017-031-00	CLUTCH ASSY.	TRANSMITS POWER FROM ENGINE TO THE TRANSMISSION.	a. SLIPPING	LOWER CARRIER LOCOMOTION AND OUTRIGGER SYSTEM ARE INOPERABLE. DELAY FOR REPAIRS.	NO EFFECT.	3
01-018-061-00	MAIN TRANSMISSION ASSY.	CONVERTS POWER FROM ENGINE TO: a. PROVIDE VEHICLE LOCOMOTION. b. OPERATE THE POWER TAKE OFF FOR THE HYDRAULIC SYSTEM.	a. INOPERATIVE	LOWER CARRIER LOCOMOTION AND OUTRIGGER SYSTEM ARE INOPERABLE. DELAY FOR REPAIRS.	NO EFFECT.	3

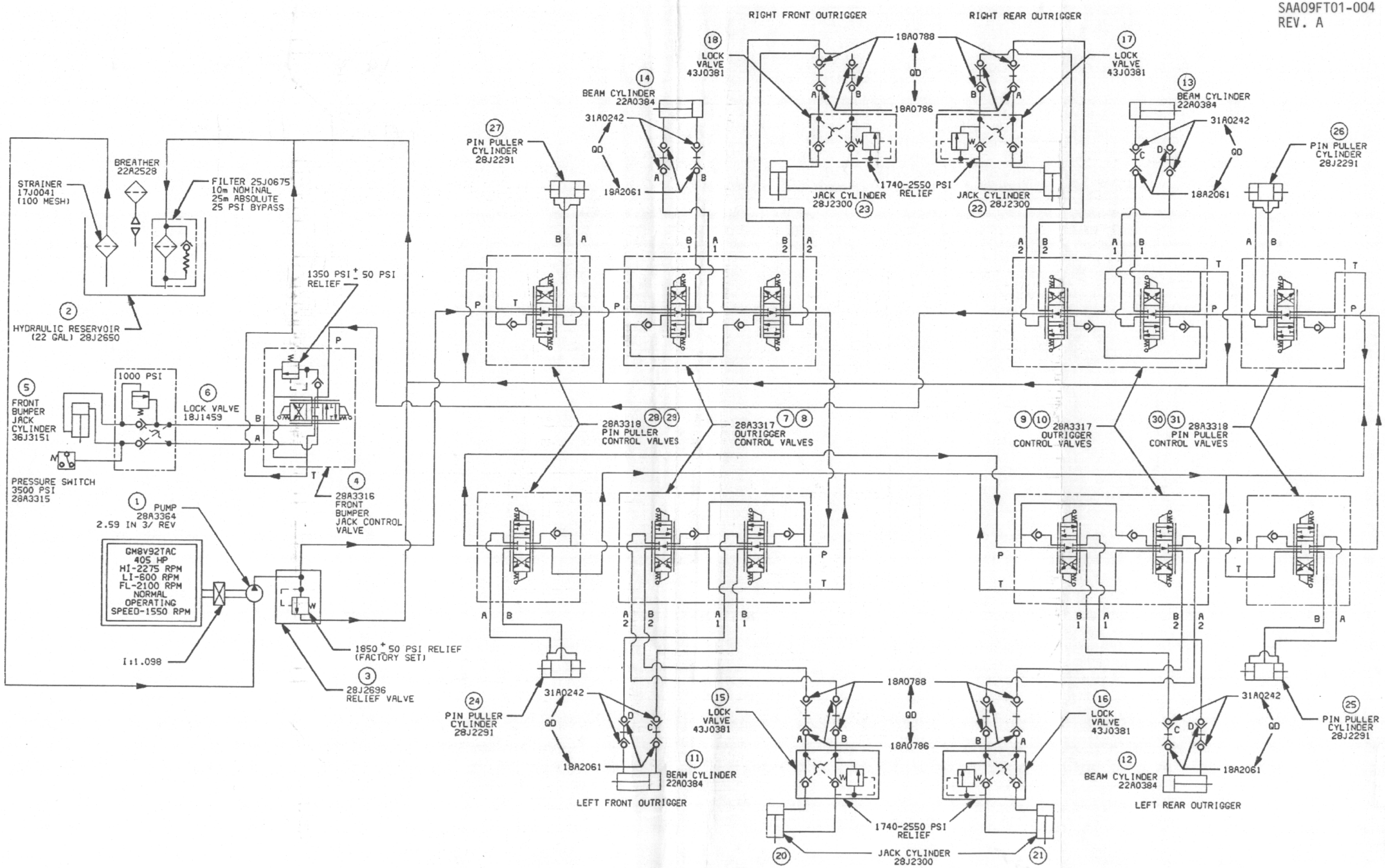

FIGURE 6. OUTRIGGER HYDRAULIC SCHEMATIC

Table 6 (Page 1 of 6). **MECHANICAL FMEA - LOWER CARRIER ASSEMBLY OUTRIGGER SYSTEM**

System LINK BELT 250-TON TRUCK CRANE
Subsystem LOWER CARRIER ASSEMBLY OUTRIGGER SYSTEM
Drawing No. 28A3314-D/BOOK #654 **Sheet No.** 1/NA
PMN H72-1390

Program SPACE SHUTTLE

Station Set/Facility Code 99
Date AUGUST 1993
Reference Figure Used 6
Prepared By B. KALLE, LSOC 52-11

FIND NO. PART NO.	PART NAME	PART FUNCTION	a. FAILURE MODE b. CAUSE c. FMN d. DETECTION METHOD e. CORRECTING ACTION f. TIME TO EFFECT g. TIMEFRAME	FAILURE EFFECT ON SYSTEM PERFORMANCE	FAILURE EFFECT ON VEHICLE SYSTEMS AND/OR PERSONNEL SAFETY	CRIT CAT
1-41-5.0/NONE 18A4827	POWER TAKEOFF	ATTACHES TO TRANSMISSION AND PROVIDES POWER TO DRIVE HYDRAULIC PUMP.	a. DISENGAGED	HYDRAULIC PUMP SUPPLYING HYDRAULIC PRESSURE TO THE OUTRIGGER SYSTEM WOULD CEASE OPERATING. DELAY FOR REPAIRS.	NO EFFECT.	3
1-40-6.0/ 1 28A3364	HYDRAULIC PUMP	ACTS AS INTERFACING ITEM BETWEEN HYDRAULIC AND POWER SYSTEM. THE PUMP PRESSURIZES THE HYDRAULIC FLUID.	a. LOW OUTPUT	OUTRIGGER HYDRAULIC SYSTEM WILL OPERATED AT A SLOWER THAN NORMAL RATE.	NO EFFECT.	3
			a. HIGH OUTPUT	OUTRIGGER HYDRAULIC SYSTEM WILL OPERATED AT A HIGHER THAN NORMAL RATE.	NO EFFECT.	3
			a. NO OUTPUT	OUTRIGGER HYDRAULIC SYSTEM INOPERATIVE. DELAY FOR REPAIR.	NO EFFECT.	3
1-39-45.0/ 2 28J2650	HYDRAULIC FLUID RESERVOIR (22 GAL. CAP.)	HOLDS HYDRAULIC FLUID SUPPLY UNTIL REQUIRED BY DEMAND OF HYDRAULIC PUMP.	a. FLUID LEAKS	THE CAPACITY OF THE HYDRAULIC SYSTEM WILL DIMINISH, CAUSING INCREASED TEMPERATURES AND REDUCED PRESSURES. DELAY FOR REPAIRS.	NO EFFECT.	3
1-39-121.25/ 3 28J2696	RELIEF VALVE (1950 ±50 PSI)	RELEASES EXCESS PRESSURE IN REACTION TO THE SYSTEM PRESSURE EXCEEDING A SET PRESSURE.	a. FAILS TO RELIEVE	DOWNSTREAM SYSTEM COMPONENTS COULD BE DAMAGED. DELAY FOR REPAIRS.	NO EFFECT.	3
			a. RELIEVES PREMATURELY	SYSTEM OPERATING PRESSURE REDUCED. DELAY FOR REPAIRS.	NO EFFECT.	3
1-47-25.0/ 4 28A3316	MANUAL CONTROL VALVE, FRONT BUMPER JACK (6-WAY, 3-POSITION)	CONTROLS FLOW OF HYDRAULIC FLUID TO RAISE AND LOWER BUMPER JACK.	a. FAILS IN UP POSITION	THE OUTRIGGER WOULD BE EXTENDED AND STUCK IN THE UP CONFIGURATION. DELAY FOR REPAIRS.	NO EFFECT.	3

Table 6 (Page 2 of 6). **MECHANICAL FMEA - LOWER CARRIER ASSEMBLY OUTRIGGER SYSTEM**

System LINK BELT 250-TON TRUCK CRANE
Subsystem LOWER CARRIER ASSEMBLY OUTRIGGER SYSTEM
Drawing No. 28A3314-D/BOOK #654 **Sheet No.** 1/NA
PMN H72-1390

Program SPACE SHUTTLE

Station Set/Facility Code 99
Date AUGUST 1993
Reference Figure Used 6
Prepared By B. KALLE, LSOC 52-11

FIND NO. PART NO.	PART NAME	PART FUNCTION	a. FAILURE MODE b. CAUSE c. FMN d. DETECTION METHOD e. CORRECTING ACTION f. TIME TO EFFECT g. TIMEFRAME	FAILURE EFFECT ON SYSTEM PERFORMANCE	FAILURE EFFECT ON VEHICLE SYSTEMS AND/OR PERSONNEL SAFETY	CRIT CAT
			a. FAILS IN DOWN POSITION	THE OUTRIGGER RETRACTS TO THE DOWN CONFIGURATION. DELAY FOR REPAIRS.	NO EFFECT.	3
			a. FAILS IN NEUTRAL POSITION	THE OUTRIGGER WOULD NOT BE OPERABLE DUE TO THE LACK OF HYDRAULIC FLUID FLOW. DELAY FOR REPAIRS.	NO EFFECT.	3
	RELIEF VALVE (1350 ±50 PSI)	RELEASES EXCESS PRESSURE TO PROTECT FRONT BUMPER JACK FROM OVER PRESSURE.	a. FAILS TO RELIEVE	DOWNSTREAM SYSTEM COMPONENTS COULD BE DAMAGED. DELAY FOR REPAIRS.	NO EFFECT.	3
			a. RELIEVES PREMATURELY	SYSTEM OPERATING PRESSURE REDUCED. DELAY FOR REPAIRS.	NO EFFECT.	3
1-46-31.0/ 5 36J3151	BUMPER JACK CYLINDER ASSY.	JACK LIFTS THE VEHICLE FOR STABILITY AND LEVELING PURPOSES. PROVIDES STABILITY FOR 360° OPERATIONS.	a. PISTON HEAD SEAL FAILURE (INTERNAL LEAKAGE) b. WORN, CUT SEAL c. 09FT01-004.001 d. VISUAL e. NONE f. SECONDS TO MINUTES g. NA	MOVEMENT OF CYLINDER ROD REQUIRES DISPLACEMENT OF FLUID FROM CYLINDER WHICH IS BLOCKED BY THE LOCK VALVE OR THE ROD SEAL. CYLINDER WILL SLOWLY EXTEND IF FAILURE OCCURS WITH JACK IN STOWED POSITION.	SUBSEQUENT FAILURE OF THE ROD SEAL OR PREMATURE THERMAL RELIEF COULD RESULT IN LOSS OF LIFE AND/OR VEHICLE.	1R
			a. ROD SEAL FAILURE (EXTERNAL LEAKAGE) b. WORN, CUT SEAL c. 09FT01-004.002 d. VISUAL e. NONE f. SECONDS TO MINUTES g. NA	NO EFFECT. CYLINDER BLIND SIDE LOCK VALVE AND/OR PISTON HEAD SEAL WILL SUPPORT THE LOAD. CYLINDER WILL SLOWLY EXTEND IF FAILURE OCCURS WITH JACK IN STOWED POSITION.	SUBSEQUENT FAILURE OF THE PISTON HEAD SEAL COULD RESULT IN LOSS OF LIFE AND/OR VEHICLE.	1R

Table 6 (Page 3 of 6). **MECHANICAL FMEA - LOWER CARRIER ASSEMBLY OUTRIGGER SYSTEM**

System LINK BELT 250-TON TRUCK CRANE
Subsystem LOWER CARRIER ASSEMBLY OUTRIGGER SYSTEM
Drawing No. 28A3314-D/BOOK #654 **Sheet No.** 1/NA
PMN H72-1390

Program SPACE SHUTTLE

Station Set/Facility Code 99
Date AUGUST 1993
Reference Figure Used 6
Prepared By B. KALLE, LSOC 52-11

FIND NO. PART NO.	PART NAME	PART FUNCTION	a. FAILURE MODE b. CAUSE c. FMN d. DETECTION METHOD e. CORRECTING ACTION f. TIME TO EFFECT g. TIMEFRAME	FAILURE EFFECT ON SYSTEM PERFORMANCE	FAILURE EFFECT ON VEHICLE SYSTEMS AND/OR PERSONNEL SAFETY	CRIT CAT
1-46-30.0/ 6 18J1459	FRONT BUMPER JACK LOCK VALVE (THERMAL RELIEF 1000 PSI)	HOLD FRONT BUMPER JACK IN POSITION.	a. FAILS OPEN (BLIND SIDE) (SLOW LEAK) b. CONTAMINATION, SPRING FAILURE c. NA d. VISUAL e. OPERATOR INTERVENTION TO LOWER AND SAFE THE LOAD. f. MINUTES TO HOURS g. SECONDS	THE JACK CYLINDER WILL BLEED DOWN AT A VERY SLOW RATE. THE CRANE OPERATOR MUST SELECT THE APPROPRIATE ACTION TO LOWER AND SAFE THE LOAD.	NO EFFECT. THERE IS SUFFICIENT TIME FOR THE OPERATOR TO TAKE CORRECTING ACTION TO PREVENT LOSS OF LIFE AND/OR LOSS (DAMAGE) TO A VEHICLE SYSTEM. SEE SECTION 2.2 GROUND RULE c.	3
			a. FAILS OPEN (ROD SIDE) b. SPRING FAILURE, CONTAMINATION c. 09FT01-004.003 d. VISUAL e. NONE f. SECONDS TO MINUTES g. NA	NO EFFECT. CYLINDER BLIND SIDE LOCK VALVE AND/OR PISTON HEAD SEAL WILL SUPPORT THE LOAD. CYLINDER WILL SLOWLY EXTEND IF FAILURE OCCURS WITH JACK IN STOWED POSITION.	SUBSEQUENT FAILURE OF THE PISTON HEAD SEAL COULD RESULT IN LOSS OF LIFE AND/OR VEHICLE.	1R
			a. FAILS CLOSED (EITHER SIDE)	UNABLE TO EXTEND OR RETRACT JACK. DELAY FOR REPAIR.	NO EFFECT.	3
			a. FAILS TO RELIEVE	COULD RESULT IN OVER PRESSURE DAMAGE TO JACK. DELAY FOR REPAIR.	NO EFFECT.	3
			a. RELIEVES PREMATURELY b. WEAK SPRING, MISCALIBRATION c. 09FT01-004.004 d. VISUAL e. NONE f. SECONDS TO MINUTES g. NA	NO EFFECT. CYLINDER BLIND SIDE LOCK VALVE AND/OR PISTON HEAD SEAL WILL SUPPORT THE LOAD. CYLINDER WILL SLOWLY EXTEND IF FAILURE OCCURS WITH JACK IN STOWED POSITION.	SUBSEQUENT FAILURE OF THE PISTON HEAD SEAL COULD RESULT IN LOSS OF LIFE AND/OR VEHICLE.	1R

Table 6 (Page 4 of 6). **MECHANICAL FMEA - LOWER CARRIER ASSEMBLY OUTRIGGER SYSTEM**

System LINK BELT 250-TON TRUCK CRANE
Subsystem LOWER CARRIER ASSEMBLY OUTRIGGER SYSTEM
Drawing No. 28A3314-D/BOOK #654 **Sheet No.** 1/NA
PMN H72-1390

Program SPACE SHUTTLE

Station Set/Facility Code 99
Date AUGUST 1993
Reference Figure Used 6
Prepared By B. KALLE, LSOC 52-11

FIND NO. PART NO.	PART NAME	PART FUNCTION	a. FAILURE MODE b. CAUSE c. FMN d. DETECTION METHOD e. CORRECTING ACTION f. TIME TO EFFECT g. TIMEFRAME	FAILURE EFFECT ON SYSTEM PERFORMANCE	FAILURE EFFECT ON VEHICLE SYSTEMS AND/OR PERSONNEL SAFETY	CRIT CAT
1-47-26.0/ 7,8,9,10 28A3317	OUTRIGGER CONTROL VALVES (2-ELEMENT, 6-WAY, 3-POSITION) (4/SYS)	CONTROLS HYDRAULIC FLUID FLOW TO OUTRIGGER FOR EXTENSION AND RETRACTION OF BEAM.	a. VALVE FAILS IN EXTEND POSITION	THE OUTRIGGER BEAM WOULD BE EXTENDED AND STUCK IN THE EXTENDED CONFIGURATION. DELAY FOR REPAIRS.	NO EFFECT.	3
			a. VALVE FAILS IN RETRACT POSITION	THE OUTRIGGER BEAM WOULD BE RETRACTED AND HELD IN THAT CONFIGURATION. DELAY FOR REPAIRS.	NO EFFECT.	3
			a. FAILS IN NEUTRAL POSITION	UNABLE TO EXTEND/RETRACT THE AFFECTED OUTRIGGER BEAM. DELAY FOR REPAIRS.	NO EFFECT.	3
		CONTROLS HYDRAULIC FLUID FLOW TO OUTRIGGER FOR JACK EXTENSION AND RETRACTION.	a. VALVE FAILS IN EXTEND POSITION	THE OUTRIGGER JACK WOULD BE EXTENDED AND STUCK IN THE EXTENDED CONFIGURATION. DELAY FOR REPAIRS.	NO EFFECT.	3
			a. VALVE FAILS IN RETRACT POSITION	THE OUTRIGGER JACK WOULD BE RETRACTED AND HELD IN THAT CONFIGURATION. DELAY FOR REPAIRS.	NO EFFECT.	3
			a. FAILS IN NEUTRAL POSITION	THE OUTRIGGER JACK WOULD BE HELD IN ITS CURRENT CONFIGURATION, THE CYLINDER WOULD BE INOPERABLE DUE TO THE LACK OF HYDRAULIC FLUID FLOW. DELAY FOR REPAIRS.	NO EFFECT.	3
1-45-12/ 11,12,13,14 22A0384	OUTRIGGER BEAM CYLINDER (4/SYS.)	MOVES OUTRIGGER BEAM INTO DEPLOYED POSITION OR INTO THE STOWED POSITION.	a. PISTON HEAD/ROD SEAL FAILURE	LOSS OF PRESSURE AND/OR FLUID ACCOMPANIED BY SLUGGISH OR SLOW RESPONSE OF BEAM MOVEMENT. DELAY FOR REPAIRS.	NO EFFECT.	3

Table 6 (Page 5 of 6). **MECHANICAL FMEA - LOWER CARRIER ASSEMBLY OUTRIGGER SYSTEM**

System LINK BELT 250-TON TRUCK CRANE
Subsystem LOWER CARRIER ASSEMBLY OUTRIGGER SYSTEM
Drawing No. 28A3314-D/BOOK #654 **Sheet No.** 1/NA
PMN H72-1390

Program SPACE SHUTTLE

Station Set/Facility Code 99
Date AUGUST 1993
Reference Figure Used 6
Prepared By B. KALLE, LSOC 52-11

FIND NO. PART NO.	PART NAME	PART FUNCTION	a. FAILURE MODE b. CAUSE c. FMN d. DETECTION METHOD e. CORRECTING ACTION f. TIME TO EFFECT g. TIMEFRAME	FAILURE EFFECT ON SYSTEM PERFORMANCE	FAILURE EFFECT ON VEHICLE SYSTEMS AND/OR PERSONNEL SAFETY	CRIT CAT
1-44-14.0/ 15,16,18,19 43J0381	LOCK VALVE (4/SYS.) (THERMAL RELIEF 1740-2250 PSI)	TO HOLD OUTRIGGER JACK IN POSITION.	a. FAILS OPEN (BLIND SIDE) (SLOW LEAK) b. CONTAMINATION, SPRING FAILURE c. NA d. VISUAL e. OPERATOR INTERVENTION TO LOWER AND SAFE THE LOAD. f. MINUTES TO HOURS g. SECONDS	THE JACK CYLINDER WILL BLEED DOWN AT A VERY SLOW RATE. THE OUTRIGGER BEAM WILL SETTLE ON TO BLOCKING. THE CRANE OPERATOR MUST SELECT THE APPROPRIATE ACTION TO LOWER AND SAFE THE LOAD.	NO EFFECT. THERE IS SUFFICIENT TIME FOR THE OPERATOR TO TAKE CORRECTING ACTION TO PREVENT LOSS OF LIFE AND/OR LOSS (DAMAGE) TO A VEHICLE SYSTEM. SEE SECTION 2.2 GROUND RULE c.	3
			a. FAILS OPEN (ROD SIDE) b. SPRING FAILURE, CONTAMINATION c. 09FT01-004.005 d. VISUAL e. NONE f. SECONDS TO MINUTES g. NA	NO EFFECT. CYLINDER BLIND SIDE LOCK VALVE AND/OR PISTON HEAD SEAL WILL SUPPORT THE LOAD. CYLINDER WILL SLOWLY EXTEND IF FAILURE OCCURS WITH JACK IN STOWED POSITION.	SUBSEQUENT FAILURE OF THE PISTON HEAD SEAL COULD RESULT IN LOSS OF LIFE AND/OR VEHICLE.	1R
			a. FAILS CLOSED (EITHER SIDE)	UNABLE TO EXTEND OR RETRACT JACK. DELAY FOR REPAIR.	NO EFFECT.	3
			a. FAILS TO RELIEVE	COULD RESULT IN OVER PRESSURE DAMAGE TO JACK. DELAY FOR REPAIR.	NO EFFECT.	3
			a. RELIEVES PREMATURELY b. WEAK SPRING, MISCALIBRATION c. 09FT01-004.006 d. VISUAL e. NONE f. SECONDS TO MINUTES g. NA	NO EFFECT. CYLINDER BLIND SIDE LOCK VALVE AND/OR PISTON HEAD SEAL WILL SUPPORT THE LOAD. CYLINDER WILL SLOWLY EXTEND IF FAILURE OCCURS WITH JACK IN STOWED POSITION.	SUBSEQUENT FAILURE OF THE PISTON HEAD SEAL COULD RESULT IN LOSS OF LIFE AND/OR VEHICLE.	1R

Table 6 (Page 6 of 6). **MECHANICAL FMEA - LOWER CARRIER ASSEMBLY OUTRIGGER SYSTEM**

System LINK BELT 250-TON TRUCK CRANE
Subsystem LOWER CARRIER ASSEMBLY OUTRIGGER SYSTEM
Drawing No. 28A3314-D/BOOK #654 **Sheet No.** 1/NA
PMN H72-1390

Program SPACE SHUTTLE

Station Set/Facility Code 99
Date AUGUST 1993
Reference Figure Used 6
Prepared By B. KALLE, LSOC 52-11

FIND NO. PART NO.	PART NAME	PART FUNCTION	a. FAILURE MODE b. CAUSE c. FMN d. DETECTION METHOD e. CORRECTING ACTION f. TIME TO EFFECT g. TIMEFRAME	FAILURE EFFECT ON SYSTEM PERFORMANCE	FAILURE EFFECT ON VEHICLE SYSTEMS AND/OR PERSONNEL SAFETY	CRIT CAT
1-46-26.0/ 20,21,22,23 28J2300	OUTRIGGER JACK CYL-INDER ASSY. (4/SYS)	JACKS LIFT THE VEHICLE FOR STABILITY AND LEVELING PURPOSES.	a. PISTON HEAD SEAL FAILURE (INTERNAL LEAKAGE) b. WORN, CUT SEAL c. 09FT01-004.007 d. VISUAL e. NONE f. SECONDS TO MINUTES g. NA	MOVEMENT OF CYLINDER ROD REQUIRES DISPLACEMENT OF FLUID FROM CYLINDER WHICH IS BLOCKED BY THE LOCK VALVE OR THE ROD SEAL. CYLINDER WILL SLOWLY EXTEND IF FAILURE OCCURS WITH JACK IN STOWED POSITION.	SUBSEQUENT FAILURE OF THE ROD SEAL OR PREMA-TURE THERMAL RELIEF COULD RESULT IN LOSS OF LIFE AND/OR VEHICLE.	1R
			a. ROD SEAL FAILURE (EXTERNAL LEAKAGE) b. WORN, CUT SEAL c. 09FT01-004.008 d. VISUAL e. NONE f. SECONDS TO MINUTES g. NA	NO EFFECT. CYLINDER BLIND SIDE LOCK VALVE AND/OR PISTON HEAD SEAL WILL SUPPORT THE LOAD. CYL-INDER WILL SLOWLY EXTEND IF FAILURE OCCURS WITH JACK IN STOWED POSITION.	SUBSEQUENT FAILURE OF THE PISTON HEAD SEAL COULD RESULT IN LOSS OF LIFE AND/OR VEHICLE.	1R

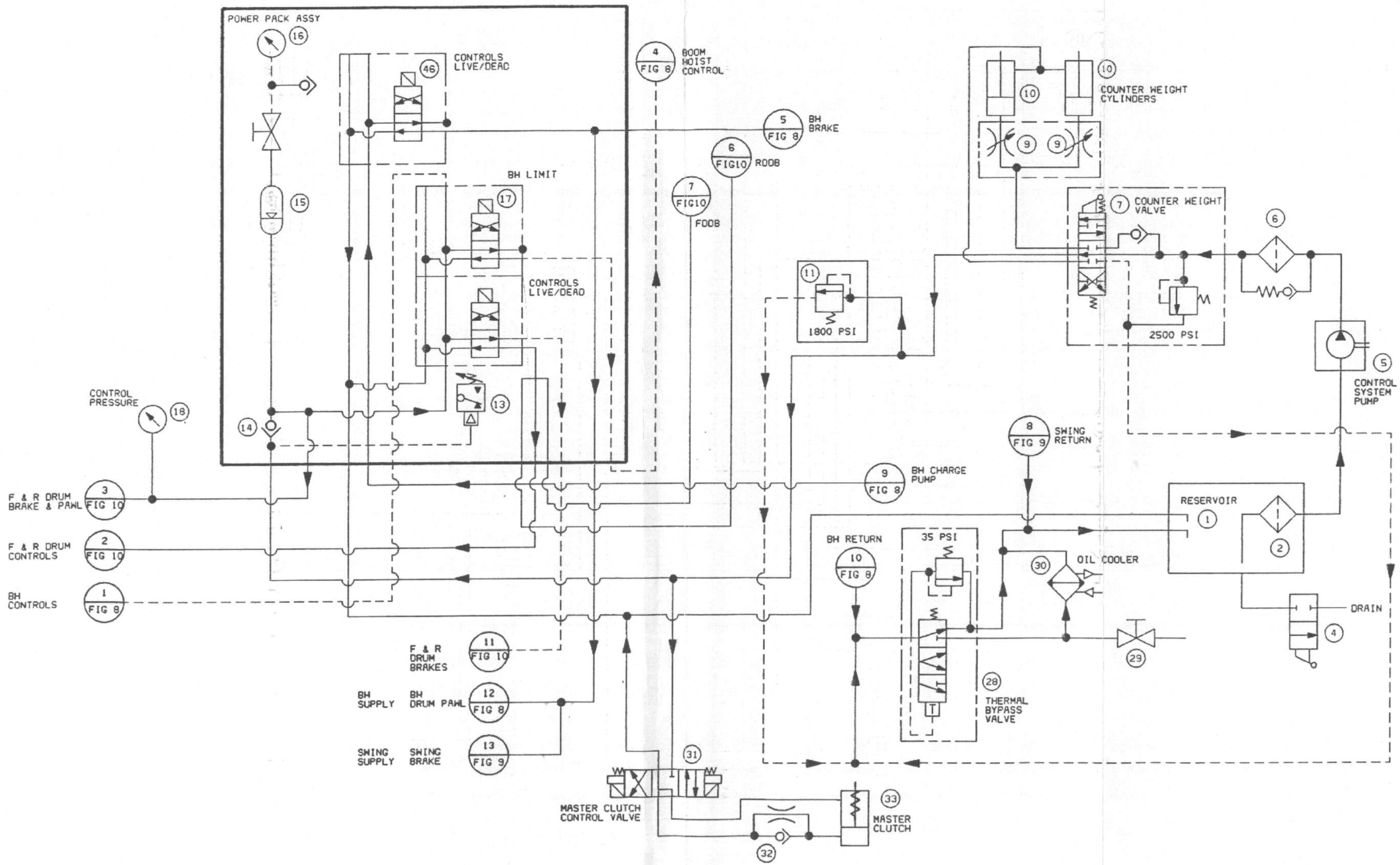

FIGURE 7. CONTROL SUPPLY, POWER PACK ASSEMBLY HYDRAULICS

Table 7 (Page 1 of 4). **MECHANICAL FMEA - CONTROL SUPPLY, POWER PACK ASSY. HYDRAULICS**

System LINK BELT 250-TON TRUCK CRANE
Subsystem CONTROL SUPPLY, POWER PACK ASSY.
Drawing No. 28A3314-D/BOOK #654 **Sheet No.** 1/NA
PMN H72-1390

Program SPACE SHUTTLE

Station Set/Facility Code 99
Date AUGUST 1993
Reference Figure Used 7
Prepared By B. KALLE, LSOC 52-11

FIND NO. PART NO.	PART NAME	PART FUNCTION	a. FAILURE MODE b. CAUSE c. FMN d. DETECTION METHOD e. CORRECTING ACTION f. TIME TO EFFECT g. TIMEFRAME	FAILURE EFFECT ON SYSTEM PERFORMANCE	FAILURE EFFECT ON VEHICLE SYSTEMS AND/OR PERSONNEL SAFETY	CRIT CAT
1 28J2710	HYDRAULIC RESERVOIR	HOLDS HYDRAULIC FLUID SUPPLY. HYDRAULIC PUMP.	a. FLUID LEAKS	THE CAPACITY OF THE HYDRAULIC SYSTEM WILL DIMINISH, CAUSING INCREASED TEMPERATURES AND REDUCED PRESSURES. DELAY FOR REPAIRS.	NO EFFECT.	3
4 32J2963	BALL VALVE	ACTS AS A DRAIN VALVE FOR RESERVOIR.	a. VALVE LEAKS	THE CAPACITY OF THE HYDRAULIC SYSTEM WILL DIMINISH, CAUSING INCREASED TEMPERATURES AND REDUCED PRESSURES. DELAY FOR REPAIRS.	NO EFFECT.	3
5A 28J3379	CONTROL SYSTEM GEAR PUMP (GM)	DRIVEN BY POWER TAKE OFF FROM GM ENGINE. PROVIDES PRESSURIZED HYDRAULIC FLUID.	a. NO OUTPUT	LOSS OF HYDRAULIC PRESSURE AND OPERATOR CONTROLLED FUNCTIONS. SPRING ACTIVATED CALIPER BRAKES AND DRUM PAWL ACT AS SECOND AND THIRD BACK-UP TO BRAKES. DELAY FOR REPAIRS.	NO EFFECT.	3
7 28J2686	COUNTER-WEIGHT DIREC-TIONAL CONTROL VALVE	DIRECTS FLOW OF HYDRAULIC FLUID TO EXPAND OR CONTRACT COUNTERWEIGHT CYLINDERS.	a. FAILS IN RAISE POSI-TION	UNABLE TO LOWER COUNTERWEIGHT TO STORAGE POSITION TO CON-FIGURE CRANE FOR TRAVEL. DELAY FOR REPAIRS.	NO EFFECT.	3
			a. FAILS IN NEUTRAL POSI-TION	UNABLE TO RAISE OR LOWER COUNTERWEIGHT. DELAY FOR REPAIRS.	NO EFFECT.	3
			a. FAILS IN LOWER POSI-TION	UNABLE TO RAISE COUNTERWEIGHT TO OPERATIONAL POSITION TO FACIL-ITATE LIFTING OPERATIONS. DELAY FOR REPAIRS.	NO EFFECT.	3
9 18J0064	NEEDLE VALVE (2)	ADJUSTS FLUID FLOW RATE TO EQUALIZE FLUID FLOW BETWEEN COUNTERWEIGHT CYLINDERS.	a. UNEVEN FLOW	REMOVAL OR INSTALLATION OF COUNTERWEIGHT WILL BE IMPEDED BY UNEQUAL CYLINDER PRESSURES. DELAY FOR REPAIRS.	NO EFFECT.	3

Table 7 (Page 2 of 4). **MECHANICAL FMEA - CONTROL SUPPLY, POWER PACK ASSY. HYDRAULICS**

System LINK BELT 250-TON TRUCK CRANE
Subsystem CONTROL SUPPLY, POWER PACK ASSY.
Drawing No. 28A3314-D/BOOK #654 **Sheet No.** 1/NA
PMN H72-1390

Program SPACE SHUTTLE

Station Set/Facility Code 99
Date AUGUST 1993
Reference Figure Used 7
Prepared By B. KALLE, LSOC 52-11

FIND NO. PART NO.	PART NAME	PART FUNCTION	a. FAILURE MODE b. CAUSE c. FMN d. DETECTION METHOD e. CORRECTING ACTION f. TIME TO EFFECT g. TIMEFRAME	FAILURE EFFECT ON SYSTEM PERFORMANCE	FAILURE EFFECT ON VEHICLE SYSTEMS AND/OR PERSONNEL SAFETY	CRIT CAT
10 28J2635	COUNTER-WEIGHT CYLINDERS (2)	POSITION THE COUNTER-WEIGHT INTO AND OUT OF POSITION AND ALSO HOLDS THE WEIGHT ONCE POSI-TIONED.	a. INTERNAL/EXTERNAL LEAK	REMOVAL OR INSTALLATION OF WEIGHT WILL BE IMPEDED BY UNEQUAL CYLINDER PRESSURES.	NO EFFECT.	3
11 76J2138	RELIEF VALVE	VALVE VENTS FLUID ABOVE 1800 PSI BACK TO RESER-VOIR.	a. RELIEVES PREMATURELY	SYSTEM OPERATING PRESSURE WILL BE DIMINISHED BELOW OPERATING RANGE.	NO EFFECT.	3
			a. FAILS TO RELIEVE	OVER PRESSURE WILL BE DISPLAYED ON GAGE (#18) ALLOWING THE OPER-ATOR TO SHUTDOWN TO PREVENT DAMAGE TO THE SYSTEM.	NO EFFECT.	3
14 51J0523	CHECK VALVE	FLUID IS ALLOWED TO FLOW FROM GEAR PUMP AND RES-ERVOIR INTO THE ACCU-MULATOR (#15) BUT NOT BACKWARD THROUGH THE CHECK VALVE.	a. FAILS OPEN	ACCUMULATOR WOULD DRAIN FLUID INTO PUMP/RESERVOIR FOLLOWING PUMP SHUTDOWN CAUSING LONGER WARM UP PERIOD. DELAY FOR REPAIRS.	NO EFFECT.	3
15 28J3349	ACCU-MULATOR	A STORAGE VESSEL WHICH HOLDS HYDRAULIC FLUID UNDER PRESSURE.	a. LEAKS FLUID	LOSS OF FLUID AND OPERATING PRESSURE. LONGER WARM UP PERIOD REQUIRED. DELAY FOR REPAIRS.	NO EFFECT.	3
17 28J3229	2-SECTION SOLENOID VALVE (4-WAY 2-POSITION EA.) a) BOOM HOIST LIMIT	a) DISABLES BOOM HOIST RAISE CONTROLS AND SETS BOOM HOIST DISC BRAKE WHEN BOOM HOIST LIMIT SWITCH IS TRIPPED. THE LIMIT SWITCH CAN BE OVER-RIDDEN BY THE BOOM HOIST LIMIT BYPASS SWITCH.	a. FAILS IN DEENERGIZED POSITION	BOOM HOIST RAISE FUNCTION INOP-ERATIVE. DELAY FOR REPAIR.	NO EFFECT.	3
			a. FAILS IN ENERGIZED POSITION	LOSS OF BOOM RAISE OVERTRAVEL PROTECTION. SYSTEM WILL OPERATE NORMALLY.	NO EFFECT.	3

Table 7 (Page 3 of 4). **MECHANICAL FMEA - CONTROL SUPPLY, POWER PACK ASSY. HYDRAULICS**

System LINK BELT 250-TON TRUCK CRANE
Subsystem CONTROL SUPPLY, POWER PACK ASSY.
Drawing No. 28A3314-D/BOOK #654 **Sheet No.** 1/NA
PMN H72-1390

Program SPACE SHUTTLE

Station Set/Facility Code 99
Date AUGUST 1993
Reference Figure Used 7
Prepared By B. KALLE, LSOC 52-11

FIND NO. PART NO.	PART NAME	PART FUNCTION	a. FAILURE MODE b. CAUSE c. FMN d. DETECTION METHOD e. CORRECTING ACTION f. TIME TO EFFECT g. TIMEFRAME	FAILURE EFFECT ON SYSTEM PERFORMANCE	FAILURE EFFECT ON VEHICLE SYSTEMS AND/OR PERSONNEL SAFETY	CRIT CAT
	b) CONTROLS LIVE/DEAD	b) ENABLES/DISABLES FRONT/REAR HOIST DRUM CONTROLS AND RELEASES/ENGAGES FRONT/REAR DRUM DISC BRAKES. CONTROLLED BY THE IGNITION AND PRESSURE SWITCH.	a. FAILS IN DEENERGIZED POSITION	FRONT AND REAR HOIST DRUMS DISABLED. DELAY FOR REPAIR.	NO EFFECT.	3
			a. FAILS IN ENERGIZED POSITION	FRONT AND REAR DISC BRAKES DISENGAGE. FRONT AND REAR PAWLS WILL HOLD THE LOAD.	NO EFFECT.	3
18 A1J0029	PRESSURE GAGE	ALLOWS OPERATOR TO MONITOR HYDRAULIC SYSTEM AT ACCUMULATOR.	a. GAGE READS HIGH	NONE, PRESSURE SWITCH WILL DISABLE HOIST CONTROLS AND SET SPRING APPLIED DISC BRAKES IF HYDRAULIC PRESSURE FALLS BELOW 1450 PSI.	NO EFFECT.	3
			a. GAGE READS LOW	AS PRESSURE EXCEEDS INDICATED PRESSURE. THE 1800 PSI RELIEF VALVE SHOULD RELEASE EXCESS PRESSURE.	NO EFFECT.	3
28 28J2261	THERMAL BYPASS VALVE 3-WAY 3 POSITION (RELIEF SET 35 PSI)	DIRECTS RETURN FLUID TO THE TANK OR OIL COOLER DEPENDING ON FLUID TEMPERATURE.	a. VALVE FAILS IN TANK ONLY POSITION	EXCESSIVE TEMPERATURE PROTECTION WILL NOT BE OPERATIONAL. DELAY FOR REPAIRS.	NO EFFECT.	3
			a. VALVE FAILS IN BOTH POSITION	SLOWER HYDRAULIC SYSTEM WARM UP. SO DEGRADATION IN OIL COOLING EFFICIENCY, SYSTEM MAY OVER HEAT. DELAY FOR REPAIR.	NO EFFECT.	3
			a. VALVE FAILS IN OIL COOLER ONLY POSITION	VERY SLOW SYSTEM WARM UP RESULTING IN POSSIBLE SLUGGISH OPERATIONS. DELAY FOR REPAIR.	NO EFFECT.	3

Table 7 (Page 4 of 4). **MECHANICAL FMEA - CONTROL SUPPLY, POWER PACK ASSY. HYDRAULICS**

System LINK BELT 250-TON TRUCK CRANE
Subsystem CONTROL SUPPLY, POWER PACK ASSY.
Drawing No. 28A3314-D/BOOK #654 **Sheet No.** 1/NA
PMN H72-1390

Program SPACE SHUTTLE

Station Set/Facility Code 99
Date AUGUST 1993
Reference Figure Used 7
Prepared By B. KALLE, LSOC 52-11

FIND NO. PART NO.	PART NAME	PART FUNCTION	a. FAILURE MODE b. CAUSE c. FMN d. DETECTION METHOD e. CORRECTING ACTION f. TIME TO EFFECT g. TIMEFRAME	FAILURE EFFECT ON SYSTEM PERFORMANCE	FAILURE EFFECT ON VEHICLE SYSTEMS AND/OR PERSONNEL SAFETY	CRIT CAT
46 18J1154	CONTROLS LIVE/DEAD, SOLENOID VALVE 4-WAY 2-POSITION	ENABLE/DISABLES BOOM HOIST DRUM PAWL, SWING BRAKE, BOOM HOIST AND SWING CONTROLS. ENABLES/DISABLES BOOM HOIST BRAKE FLUID SUPPLY. CONTROLLED BY THE IGNITION AND PRESSURE SWITCHES.	a. FAILS IN DEENERGIZE POSITION	ALL AFFECTED FUNCTIONS REMAIN DISABLED.	NO EFFECT.	3
			a. FAILS IN ENERGIZED POSITION	BOOM HOIST AND SWING CONTROLS REMAIN ACTIVE.	NO EFFECT.	3

Table 8 (Page 1 of 2). **MECHANICAL FMEA - UPPER CRANE ASSY POWER TRAIN**

System LINK BELT 250-TON TRUCK CRANE
Subsystem UPPER CRANE ASSY POWER TRAIN
Drawing No. 28A3314-D/BOOK #654 **Sheet No.** 1/NA
PMN H72-1390

Program SPACE SHUTTLE

Station Set/Facility Code 99
Date AUGUST 1993
Reference Figure Used 7
Prepared By B. KALLE, LSOC 52-11

FIND NO. PART NO.	PART NAME	PART FUNCTION	a. FAILURE MODE b. CAUSE c. FMN d. DETECTION METHOD e. CORRECTING ACTION f. TIME TO EFFECT g. TIMEFRAME	FAILURE EFFECT ON SYSTEM PERFORMANCE	FAILURE EFFECT ON VEHICLE SYSTEMS AND/OR PERSONNEL SAFETY	CRIT CAT
6-5-123.0	ENGINE ASSY. (G.M.)	PROVIDES POWER TO OPERATE ALL UPPER CRANE ASSY. SYSTEMS.	a. INOPERATIVE	ALL UPPER CRANE SYSTEMS INOPERATIVE (EXCEPT ELECTRICAL). DELAY FOR REPAIRS.	NO EFFECT.	3
6-17-49.0 28H0946	MASTER CLUTCH ASSY	TRANSMITS POWER TO TORQUE CONVERTER.	a. SLIPPING	ALL UPPER CRANE SYSTEMS INOPERATIVE (EXCEPT ELECTRICAL). DELAY FOR REPAIRS.	NO EFFECT.	3
6-16-99.0 28H0947	TORQUE CONVERTER	CONVERTS OUTPUT TORQUE FROM ENGINE ASSY. AND ADAPTS IT TO DRIVE THE SYSTEMS ON THE CRANE ASSY.	a. INOPERATIVE	ALL UPPER CRANE SYSTEMS INOPERATIVE (EXCEPT ELECTRICAL). DELAY FOR REPAIRS.	NO EFFECT.	3
6-37-18.0	ROLLER CHAIN	TRANSFERS POWER FROM TORQUE CONVERTER PINION GEAR TO CHAIN SPROCKET AND JACK SHAFT.	a. DISENGAGES	TERMINATES POWER TRANSMITTED TO REAR AND FRONT DRUMS. DELAY FOR REPAIRS.	NO EFFECT.	3
7-3-30.0/31 31J2802	MASTER CLUTCH 4 WAY, 3 POSITION, SOLENOID VALVE	THE VALVE CONTROLS HYDRAULIC FLUID FLOW TO THE DOUBLE ACTING CYLINDER WHICH ENGAGES THE MASTER CLUTCH.	a. VALVE FAILS IN THE NEUTRAL POSITION.	THE MASTER CLUTCH DOUBLE ACTION CYLINDER WILL REMAIN IN THE LAST COMMANDED POSITION. DELAY FOR REPAIR.	NO EFFECT.	3
			a. VALVE FAILS IN THE CLUTCH ENGAGE POSITION.	MASTER CLUTCH WILL REMAIN ENGAGED. DELAY FOR REPAIRS.	NO EFFECT.	3
			a. VALVE FAILS IN THE CLUTCH DISENGAGE POSITION.	MASTER CLUTCH CANNOT BE ENGAGED. DELAY FOR REPAIRS.	NO EFFECT.	3
32 43J1911	MASTER CLUTCH RESTRICTOR CHECK VALVE	RESTRICTS FLOW INTO ONE END OF CYLINDER.	a. CHECK VALVE FAILS OPEN	CYLINDER COMPRESSION WILL OCCUR RAPIDLY AND CLUTCH WILL DISENGAGE RAPIDLY. DELAY FOR REPAIRS.	NO EFFECT.	3

Table 8 (Page 2 of 2). **MECHANICAL FMEA - UPPER CRANE ASSY POWER TRAIN**

System LINK BELT 250-TON TRUCK CRANE
Subsystem UPPER CRANE ASSY POWER TRAIN
Drawing No. 28A3314-D/BOOK #654 **Sheet No.** 1/NA
PMN H72-1390

Program SPACE SHUTTLE

Station Set/Facility Code 99
Date AUGUST 1993
Reference Figure Used 7
Prepared By B. KALLE, LSOC 52-11

FIND NO. PART NO.	PART NAME	PART FUNCTION	a. FAILURE MODE b. CAUSE c. FMN d. DETECTION METHOD e. CORRECTING ACTION f. TIME TO EFFECT g. TIMEFRAME	FAILURE EFFECT ON SYSTEM PERFORMANCE	FAILURE EFFECT ON VEHICLE SYSTEMS AND/OR PERSONNEL SAFETY	CRIT CAT
			a. CHECK VALVE FAILS CLOSED	CYLINDER EXPANSION WILL OCCUR SLOWER AND CLUTCH WILL ENGAGE SLOWLY. DELAY FOR REPAIRS.	NO EFFECT.	3
6-17-28.0/33 28J2135	MASTER CLUTCH DOUBLE ACTING CYLINDER	ACTS AS A SLAVE CYLINDER TO ENGAGE OR DISENGAGE THE MASTER CLUTCH.	a. CYLINDER INOPERABLE	CLUTCH CAN NOT BE ENGAGE OR DIS-ENGAGED. DELAY FOR REPAIRS.	NO EFFECT.	3

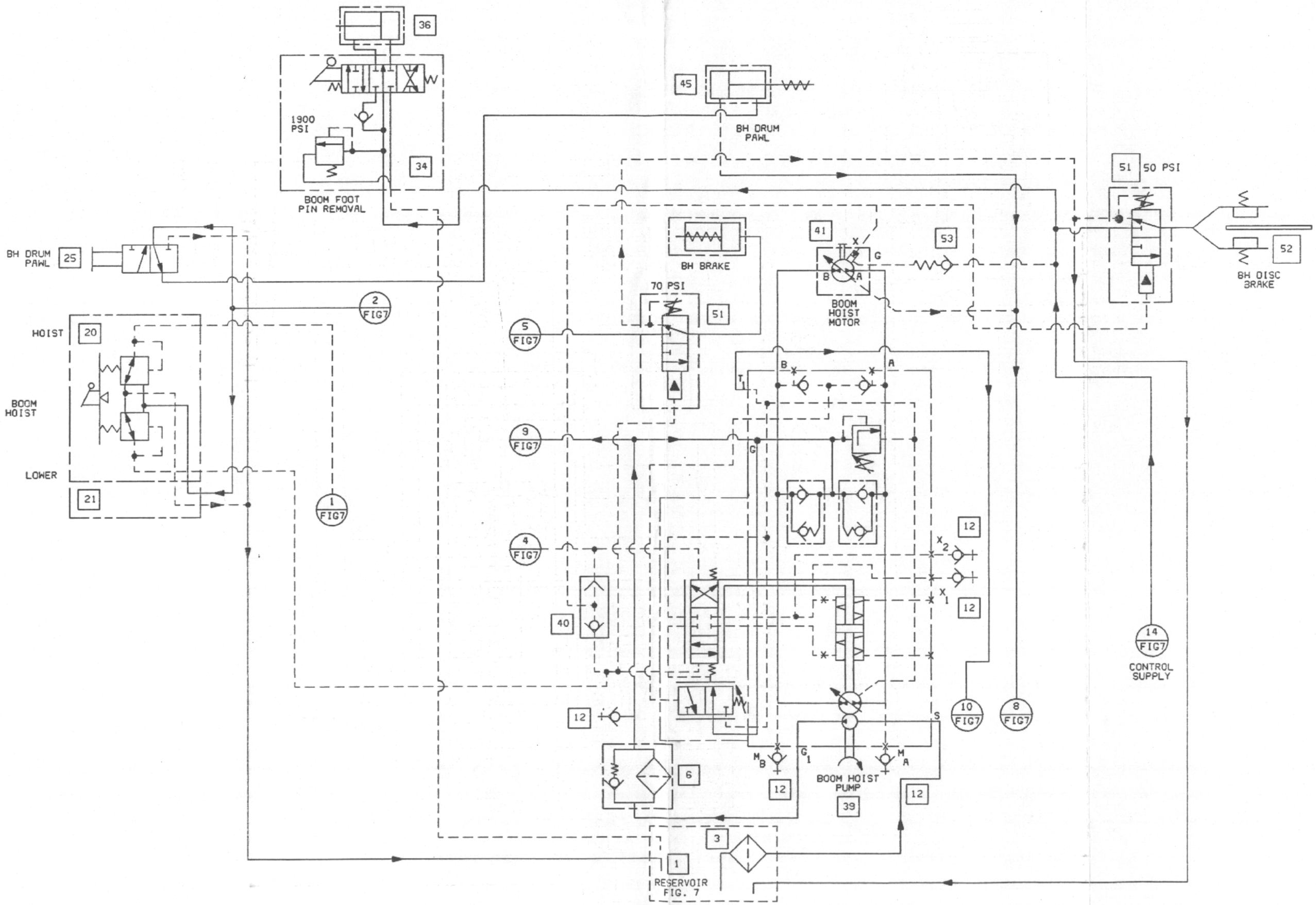

FIGURE 8. UPPER CRANE BOOM HOIST HYDRAULIC SCHEMATIC

Table 9 (Page 1 of 3). **MECHANICAL FMEA - UPPER CRANE BOOM HOIST SYSTEM**

System LINK BELT 250-TON TRUCK CRANE
Subsystem UPPER CRANE BOOM HOIST SYSTEM
Drawing No. 28A3314-D/BOOK #654 **Sheet No.** 1/NA
PMN H72-1390

Program SPACE SHUTTLE

Station Set/Facility Code 99
Date AUGUST 1993
Reference Figure Used 8
Prepared By B. KALLE, LSOC 52-11

FIND NO. PART NO.	PART NAME	PART FUNCTION	a. FAILURE MODE b. CAUSE c. FMN d. DETECTION METHOD e. CORRECTING ACTION f. TIME TO EFFECT g. TIMEFRAME	FAILURE EFFECT ON SYSTEM PERFORMANCE	FAILURE EFFECT ON VEHICLE SYSTEMS AND/OR PERSONNEL SAFETY	CRIT CAT
7-5-120.0	BOOM HOIST HYDRAULIC PUMP	CIRCULATES AND PRESSURIZES HYDRAULIC FLUID TO DRIVE THE HYDRAULIC BOOM HOIST MOTOR.	a. INOPERATIVE	BOOM HOIST INOPERATIVE PREVENTING ANY ADJUSTMENTS TO BOOM CONFIGURATION. DELAY FOR REPAIRS.	NO EFFECT.	3
7-6-156.0	BOOM HYDRAULIC MOTOR	CONVERTS ENERGY CIRCULATING IN THE PRESSURIZED HYDRAULIC FLUID INTO A ROTARY MOTION TO DRIVE THE BOOM HOIST.	a. INOPERATIVE	BOOM HOIST INOPERATIVE PREVENTING ANY ADJUSTMENTS TO BOOM CONFIGURATION. DELAY FOR REPAIRS.	NO EFFECT.	3
5-007-098.0	BOOM HOIST PLANETARY GEAR	RECEIVES POWER FROM HYDRAULIC MOTOR TO DRIVE BOOM HOIST DRUM.	a. GEARS DISENGAGE	LOSS OF DRIVING FORCE TO ROTATE BOOM HOIST DRUM. THE BRAKE AND PAWL WILL HOLD THE SYSTEM IN A STATIC MODE. DELAY FOR REPAIRS.	NO EFFECT.	3
5-012-136.0	BOOM HOIST DISC BRAKE CALIPER	RELEASES AUTOMATICALLY WHEN BOOM HOIST IS ACTIVATED. RESETS WHEN MOTION IS COMPLETE.	a. FAILS WITH BRAKE SET	BOOM CANNOT BE RAISED OR LOWERED.	NO EFFECT.	3
			a. FAILS WITH BRAKE RELEASED	THE BOOM CAN BE HELD WITH THE OPERATOR CONTROLLED DISC OR PAWL BRAKES.	NO EFFECT.	3
5-007-098.0	SPRING APPLIED PLANETARY BRAKE	RELEASES AUTOMATICALLY WHEN BOOM HOIST IS ACTIVATED. RESETS WHEN MOTION IS COMPLETE.	a. BRAKE FAILS TO SET.	OPERATOR CONTROLLED HYDRAULIC BRAKE OR PAWL MAY BE ENGAGED TO HOLD LOAD. DELAY FOR REPAIRS.	NO EFFECT.	3
			a. BRAKE FAILS TO RELEASE	BOOM HOIST FUNCTION INOPERATIVE. DELAY FOR REPAIRS.	NO EFFECT.	3
5-012-126.0	BOOM HOIST DRUM PAWL	LOCKS BOOM HOIST AGAINST ROTATION.	a. INOPERATIVE	BOOM HOIST DISC BRAKE AND THE SPRING APPLIED PLANETARY BRAKE WILL HOLD THE BOOM HOIST DRUM. DELAY FOR REPAIRS.	NO EFFECT.	3

Table 9 (Page 2 of 3). **MECHANICAL FMEA - UPPER CRANE BOOM HOIST SYSTEM**

System LINK BELT 250-TON TRUCK CRANE
Subsystem UPPER CRANE BOOM HOIST SYSTEM
Drawing No. 28A3314-D/BOOK #654 **Sheet No.** 1/NA
PMN H72-1390

Program SPACE SHUTTLE

Station Set/Facility Code 99
Date AUGUST 1993
Reference Figure Used 8
Prepared By B. KALLE, LSOC 52-11

FIND NO. PART NO.	PART NAME	PART FUNCTION	a. FAILURE MODE b. CAUSE c. FMN d. DETECTION METHOD e. CORRECTING ACTION f. TIME TO EFFECT g. TIMEFRAME	FAILURE EFFECT ON SYSTEM PERFORMANCE	FAILURE EFFECT ON VEHICLE SYSTEMS AND/OR PERSONNEL SAFETY	CRIT CAT
20 28J3199	BOOM HOIST CONTROL VALVE	VALVE CONTROLS HYDRAULIC FLOW TO HOIST OR LOWER BOOM.	a. VALVE FAILS IN HOIST POSITION	BOOM WOULD CONTINUE TO BE HOISTED UNTIL OPERATOR APPLIES BRAKE BY USING THE CONTROL SHUT DOWN SWITCH OR THE BOOM ANGLE LIMIT SWITCH DISABLES THE HOIST FUNCTION. DELAY FOR REPAIRS.	NO EFFECT. BOOM ANGLE IS FIXED PRIOR TO LIFT.	3
			a. VALVE FAILS IN LOWER POSITION	BOOM WOULD CONTINUE TO BE LOWERED UNTIL OPERATOR APPLIES BRAKE BY USING THE CONTROL SHUT DOWN SWITCH. DELAY FOR REPAIRS.	NO EFFECT. BOOM ANGLE IS FIXED PRIOR TO LIFT.	3
40 5120410	SHUTTLE VALVE	THE VALVE SELECTS ONE OF TWO INPUTS AND ROUTES THE FLOW TO THE BOOM HOIST DISC BRAKE SOLENOID.	a. VALVE LEAKS PAST BALL AND SEAT	LESS THAN ADEQUATE PRESSURE AVAILABLE TO RELEASE BOOM HOIST BRAKES. THE PAWL OR SPRING APPLIED BRAKES WILL HOLD BOOM. DELAY FOR REPAIRS.	NO EFFECT.	3
45 28J2253	DOUBLE ACTING CYLINDER, BOOM HOIST PAWL	THE CYLINDER ENGAGES OR DISENGAGES THE PAWL.	a. CYLINDER INOPERATIVE	THE DRUM PAWL MECHANISM WOULD NOT RESPOND TO OPERATOR CONTROL ACTIONS. THE PAWL COULD NOT BE ENGAGED OR DISENGAGED. IF THE PAWL DOES NOT ENGAGE, THE BRAKES MUST BE APPLIED. DELAY FOR REPAIRS.	NO EFFECT.	3
51 28J3385	DIRECTIONAL CONTROL VALVE (2) a. BOOM HOIST BRAKE b. BOOM HOIST DISC BRAKE	VALVE OPERATES BRAKE WHEN ACTIVATED BY PRESSURE DIFFERENTIAL AT SHUTTLE VALVE #40.	a. VALVE FAILS IN BRAKE SET POSITION	BRAKE RELEASE (#1 OR #2) WOULD NOT FUNCTION DUE TO VALVE FAILURE. THE BRAKES ARE SPRING ACTIVATED AND WILL NOT RELEASE UNTIL HYDRAULIC PRESSURE RELEASES THEM. DELAY FOR REPAIRS.	NO EFFECT.	3

Table 9 (Page 3 of 3). **MECHANICAL FMEA - UPPER CRANE BOOM HOIST SYSTEM**

System LINK BELT 250-TON TRUCK CRANE
Subsystem UPPER CRANE BOOM HOIST SYSTEM
Drawing No. 28A3314-D/BOOK #654 **Sheet No.** 1/NA
PMN H72-1390

Program SPACE SHUTTLE

Station Set/Facility Code 99
Date AUGUST 1993
Reference Figure Used 8
Prepared By B. KALLE, LSOC 52-11

FIND NO. PART NO.	PART NAME	PART FUNCTION	a. FAILURE MODE b. CAUSE c. FMN d. DETECTION METHOD e. CORRECTING ACTION f. TIME TO EFFECT g. TIMEFRAME	FAILURE EFFECT ON SYSTEM PERFORMANCE	FAILURE EFFECT ON VEHICLE SYSTEMS AND/OR PERSONNEL SAFETY	CRIT CAT
			a. VALVE FAILS IN BRAKE RELEASE POSITION	BRAKE (#1 AND #2) WILL BE RELEASED BY HYDRAULIC PRESSURE TO THE CALIPERS. NOTE: BRAKE #1 AND #2 ARE REDUNDANT TO EACH OTHER. THE BOOM HOIST PAWL CAN ALSO BE ENGAGED TO HOLD THE BOOM DRUM FROM TURNING. DELAY FOR REPAIRS.	NO EFFECT.	3
53 76J0025	CHECK VALVE	THIS VALVE ALLOWS FREE FLOW IN ONE DIRECTION AND BLOCKS FLOW IN THE OTHER DIRECTION.	a. VALVE FAILS OPEN	HIGH PRESSURE FROM THE CONTROL SYSTEM PUMP WOULD ENTER THE BOOM HOIST MOTOR. THE BOOM HOIST DISC BRAKE WOULD BE APPLIED THROUGH FEEDBACK FROM THE BOOM HOIST MOTOR. DELAY FOR REPAIRS.	NO EFFECT.	3
			a. VALVE LEAKS WHEN CLOSED	HYDRAULIC PRESSURE FROM BOOM HOIST MOTOR COULD BLEED THROUGH THE CHECK VALVE SEAT AND ENTER THE HIGH PRESSURE LINE FROM THE CONTROL SYSTEM PUMP. DELAY FOR REPAIRS.	NO EFFECT.	3

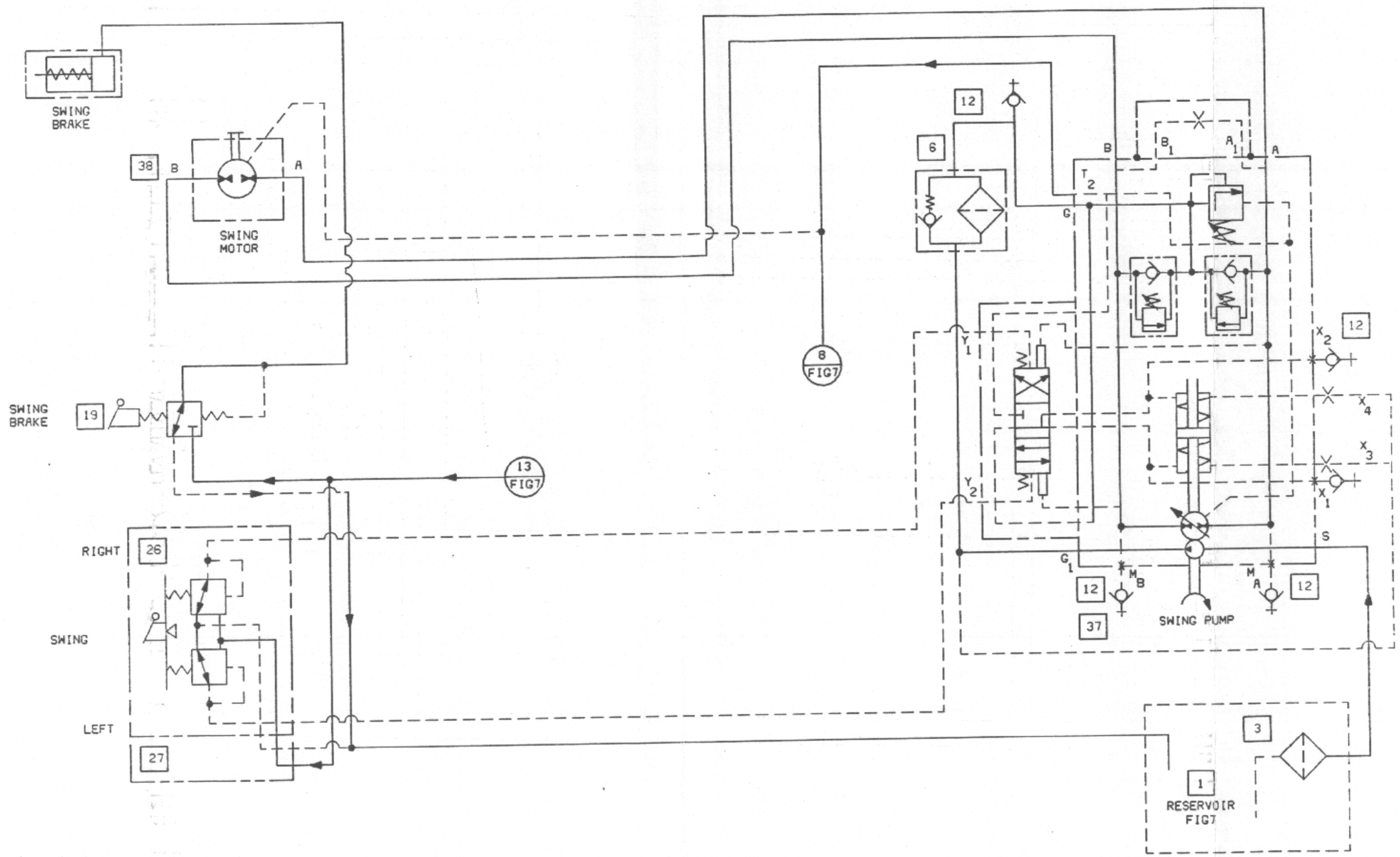

FIGURE 9. UPPER CRANE SWING SUBSYTEM HYDRAULIC SCHEMATIC

Table 10 (Page 1 of 2). **MECHANICAL FMEA - UPPER CRANE SWING SUBSYSTEM**

System LINK BELT 250-TON TRUCK CRANE
Subsystem UPPER CRANE SWING SUBSYSTEM
Drawing No. BOOK #654 **Sheet No.** NA
PMN H72-1390

Program SPACE SHUTTLE

Station Set/Facility Code 99
Date AUGUST 1993
Reference Figure Used 9
Prepared By B. KALLE, LSOC 52-11

FIND NO. PART NO.	PART NAME	PART FUNCTION	a. FAILURE MODE b. CAUSE c. FMN d. DETECTION METHOD e. CORRECTING ACTION f. TIME TO EFFECT g. TIMEFRAME	FAILURE EFFECT ON SYSTEM PERFORMANCE	FAILURE EFFECT ON VEHICLE SYSTEMS AND/OR PERSONNEL SAFETY	CRIT CAT
28J3418 7-5-119.0	SWING HYDRAULIC PUMP	CIRCULATES AND PRESSURIZES THE HYDRAULIC FLUID TO DRIVE THE HYDRAULIC SWING MOTOR.	a. INOPERABLE	ROTATIONAL CAPABILITY OF THE SWING SYSTEM INOPERABLE DUE TO LACK OF HYDRAULIC FLUID PRESSURE. DELAY FOR REPAIRS.	NO EFFECT.	3
28J2451 7-6-156.0	SWING HYDRAULIC MOTOR	CONVERTS ENERGY CIRCULATING IN THE PRESSURIZED HYDRAULIC FLUID INTO A ROTARY MOTION TO DRIVE THE SWING PLANETARY ASSY.	a. INOPERATIVE	ROTATIONAL CAPABILITY OF THE SWING SYSTEM INOPERATIVE. DELAY FOR REPAIRS.	NO EFFECT.	3
4-3-66.0	SWING PLANETARY ASSY.	TRANSMITS THE ROTARY MOTION (PROVIDED BY THE SWING HYDRAULIC MOTOR) THROUGH A SERIES OF GEARS AND DRIVES THE SWING PINION AGAINST THE TURNTABLE RING GEAR.	a. STRUCTURAL FAILURE (GEARS)	DEBRIS WILL JAM THE PLANETARY RENDERING THE ROTATIONAL CAPABILITY OF THE SWING SYSTEM INOPERATIVE. THE SWING LOCK ASSY. PROVIDES ADDITIONAL SECURITY AGAINST UNCONTROLLED ROTATION. DELAY FOR REPAIRS.	NO EFFECT. TRIPLE LOAD PATH REQUIRES MULTIPLE CATASTROPHIC FAILURES.	3
3-6-76.0	SWING LOCK ASSY.	LOCK ROTARY SWING GEAR IN POSITION AND SECURES FROM ROTATING.	a. INOPERATIVE	NONE, SWING BRAKE ENGAGED TO PREVENT UNCONTROLLED ROTATION. DELAY FOR REPAIRS.	NO EFFECT.	3
4-3-66.0	SWING BRAKE	SPRING APPLIED (NORMALLY ON) THIS BRAKE ASSEMBLY HOLDS THE SWING GEARS FROM ROTATING.	a. BRAKE FAILS TO SET	LOSS OF REDUNDANT SWING STOP CAPABILITY. THE SWING LOCK CAN SECURE THE SWING ASSY. FOR LIFTS. DELAY FOR REPAIRS.	NO EFFECT.	3
			a. BRAKE FAILS TO RELEASE	THE SWING ASSEMBLY WILL NOT ROTATE. DELAY FOR REPAIRS.	NO EFFECT.	3
19 28J2743	SWING BRAKE VARIABLE PRESSURE VALVE	VARIABLE HYDRAULIC VALVE CONTROLS FLOW TO SWING BRAKE ASSY.	a. VALVE FAILS IN BRAKE SET POSITION	THE SWING BRAKE WILL REMAIN SET. LOSS OF SWING FUNCTION. DELAY FOR REPAIRS.	NO EFFECT.	3

Table 10 (Page 2 of 2). **MECHANICAL FMEA - UPPER CRANE SWING SUBSYSTEM**

System LINK BELT 250-TON TRUCK CRANE
Subsystem UPPER CRANE SWING SUBSYSTEM
Drawing No. BOOK #654 **Sheet No.** NA
PMN H72-1390

Program SPACE SHUTTLE

Station Set/Facility Code 99
Date AUGUST 1993
Reference Figure Used 9
Prepared By B. KALLE, LSOC 52-11

FIND NO. PART NO.	PART NAME	PART FUNCTION	a. FAILURE MODE b. CAUSE c. FMN d. DETECTION METHOD e. CORRECTING ACTION f. TIME TO EFFECT g. TIMEFRAME	FAILURE EFFECT ON SYSTEM PERFORMANCE	FAILURE EFFECT ON VEHICLE SYSTEMS AND/OR PERSONNEL SAFETY	CRIT CAT
			a. VALVE FAILS IN BRAKE RELEASE POSITION	LOSS OF REDUNDANT SWING STOP CAPABILITY. THE SWING LOCK CAN SECURE THE SWING ASSY. FOR LIFTS. DELAY FOR REPAIRS.	NO EFFECT.	3
26 28J3416	SWING LEFT/RIGHT CONTROL VALVE	VALVE CONTROLS HYDRAULIC FLOW DRIVING SWING PUMP TO OPERATE UPPER CRANE TO ROTATE LEFT OR RIGHT ON THE TURNTABLE.	a. VALVE FAILS IN SWING LEFT/RIGHT POSITION b. VALVE ELEMENT JAMS c. NA d. VISUAL e. APPLICATION OF REVERSE DIRECTION AND/OR SWING BRAKE f. SECONDS g. IMMEDIATE TO SECONDS	UPPER CRANE WOULD CONTINUE TO ROTATE TO THE LEFT/RIGHT. APPLICATION OF REVERSE DIRECTION (STANDARD STOPPING PROCEDURE) AND/OR SWING BRAKE OR THE CONTROL SHUT DOWN SWITCH COULD BE EMPLOYED TO STOP ROTATION. DELAY FOR REPAIRS.	NO EFFECT. THERE SHOULD BE SUFFICIENT TIME FOR THE OPERATOR TO REACT TO PREVENT LOSS (DAMAGE) TO A VEHICLE SYSTEM.	3
			a. VALVE FAILS IN NEUTRAL POSITION	UPPER CRANE SWING FUNCTION DISABLED. DELAY FOR REPAIRS.	NO EFFECT.	3

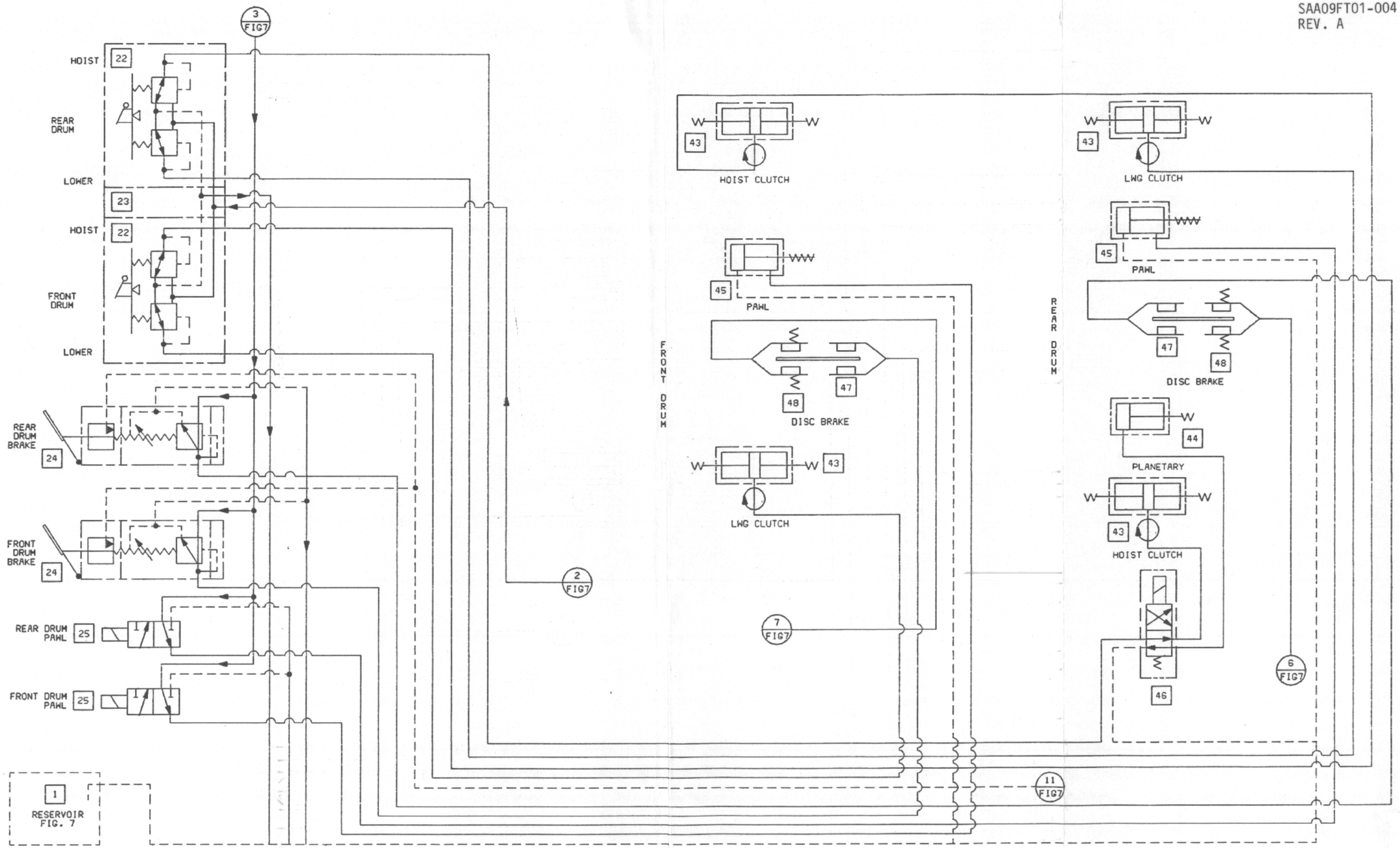

FIGURE 10. UPPER CRANE FRONT/REAR DRUM HYDRAULIC SCHEMATIC

Table 11 (Page 1 of 6). **MECHANICAL FMEA - UPPER CRANE FRONT/REAR MAIN HOISTS**

System LINK BELT 250-TON TRUCK CRANE
Subsystem UPPER CRANE FRONT/REAR DRUM SHAFT ASSY.
Drawing No. BOOK #654 **Sheet No.** NA
PMN H72-1390

Program SPACE SHUTTLE

Station Set/Facility Code 99
Date AUGUST 1993
Reference Figure Used 10.
Prepared By B. KALLE, LSOC 52-11

FIND NO. PART NO.	PART NAME	PART FUNCTION	a. FAILURE MODE b. CAUSE c. FMN d. DETECTION METHOD e. CORRECTING ACTION f. TIME TO EFFECT g. TIMEFRAME	FAILURE EFFECT ON SYSTEM PERFORMANCE	FAILURE EFFECT ON VEHICLE SYSTEMS AND/OR PERSONNEL SAFETY	CRIT CAT
5-4-85 28D200 28D158	FRONT/REAR DRUM AND SHAFT ASSY.	STORES ROPE AND PROVIDES CAPABILITY TO RETRIEVE AND PAY OUT WIRE ROPE.	a. INOPERATIVE	LOSS OF OPERATOR CONTROL OVER REAR DRUM. REAR DRUM PAWL WOULD ENGAGE DRUM RATCHET TO HOLD DRUM FROM ROTATING. DELAY FOR REPAIRS.	NO EFFECT.	3
5-4-85 9D359	DRUM GEARS (4)	DERIVES POWER FROM DRIVE TRAIN TO ROTATE CLUTCH ASSY. ON RIGHT SIDE.	a. GEARS DISENGAGE	LOSS OF DRIVING FORCE TO ROTATE REAR SHAFT AND DRUM. THE BRAKE AND PAWL WILL HOLD THE SYSTEM IN A STATIC MODE. DELAY FOR REPAIRS.	NO EFFECT.	3
5-9-76.0 28D209 28D186	CLUTCH ASSY. (4)	COUPLES HOIST DRUM TO DRIVE TRAIN IN DESIRED DIRECTION.	a. FAILS TO ENGAGE/SLIPS	LOSS OF OPERATOR CONTROL OVER DRUM AND SHAFT ROTATION WHEN DRIVEN BY CLUTCHED DRUM GEAR. SPRING APPLIED BRAKE AND PAWL WILL HOLD DRUM STATIONARY. DELAY FOR REPAIRS.	NO EFFECT.	3
			a. FAILS TO DISENGAGE	LOSS OF OPERATOR CONTROL OVER DRUM AND SHAFT ROTATION WHEN DRIVEN BY CLUTCHED DRUM GEAR. SPRING APPLIED BRAKE AND PAWL WILL HOLD DRUM STATIONARY. LOAD CAN BE LOWERED ON THE TORQUE CONVERTER. DELAY FOR REPAIRS.	NO EFFECT.	3
5-7-89.0	REAR PLANETARY ASSEMBLY	WHEN ENGAGED PROVIDES HIGH SPEED HOIST CAPABILITY TO THE REAR HOIST.	a. GEARS DISENGAGE	LOSS OF DRIVING FORCE TO ROTATE REAR SHAFT AND DRUM. THE BRAKE AND PAWL WILL HOLD THE LOAD. DELAY FOR REPAIRS.	NO EFFECT.	3
5-7-90.0	REAR PLANETARY BRAKE ASSY.	ACTS AS A CLUTCH TO ENGAGE THE PLANETARY GEAR FOR HIGH SPEED HOIST.	a. FAILS TO SET	REAR HOIST HIGH SPEED FUNCTION INOPERATIVE.	NO EFFECT.	3
			a. FAILS TO RELEASE	REAR NORMAL SPEED HOIST FUNCTION INOPERATIVE.	NO EFFECT.	3

Table 11 (Page 2 of 6). **MECHANICAL FMEA - UPPER CRANE FRONT/REAR MAIN HOISTS**

System LINK BELT 250-TON TRUCK CRANE
Subsystem UPPER CRANE FRONT/REAR DRUM SHAFT ASSY.
Drawing No. BOOK #654 **Sheet No.** NA
PMN H72-1390

Program SPACE SHUTTLE

Station Set/Facility Code 99
Date AUGUST 1993
Reference Figure Used 10.
Prepared By B. KALLE, LSOC 52-11

FIND NO. PART NO.	PART NAME	PART FUNCTION	a. FAILURE MODE b. CAUSE c. FMN d. DETECTION METHOD e. CORRECTING ACTION f. TIME TO EFFECT g. TIMEFRAME	FAILURE EFFECT ON SYSTEM PERFORMANCE	FAILURE EFFECT ON VEHICLE SYSTEMS AND/OR PERSONNEL SAFETY	CRIT CAT
5-7-123.0	FRONT/REAR DISC BRAKE ASSY. (2) 1) OPERATOR APPLIED 2) SPRING APPLIED	1) OPERATIONAL BRAKE USED TO CONTROL LOAD 2) EMERGENCY BRAKE, RELEASES WHEN CONTROL HYDRAULICS ARE ENABLED, AUTOMATICALLY SETS DURING SHUT DOWN.	a. 1)FAILS TO ENGAGE	LOSS OF OPERATOR CONTROLLED BRAKING. ENGAGEMENT OF PAWL AND SPRING APPLIED BRAKE WILL EFFECTIVELY LOCK DRUM PREVENTING FURTHER ROTATION. DELAY FOR REPAIRS.	NO EFFECT.	3
			a. 1)FAILS TO DISENGAGE	ROTATION OF DRUM IS NOT POSSIBLE UNTIL BRAKE DISENGAGED. DELAY FOR REPAIRS.	NO EFFECT.	3
			a. 2)BRAKES ARE NOT AUTOMATICALLY APPLIED WHEN POWER FAILS b. SPRING FAILURE c. NA d. VISUAL e. APPLICATION OF ADDITIONAL MANUAL BRAKING OR PAWL ENGAGEMENT f. SECONDS g. IMMEDIATE TO SECONDS	LOAD MAY NOT BE HELD WHEN POWER FAILS. OPERATOR CONTROLLED HYDRAULIC BRAKES OR PAWL MAY BE ENGAGED TO HOLD LOAD. DELAY FOR REPAIRS.	NO EFFECT. THERE SHOULD BE SUFFICIENT TIME FOR THE OPERATOR TO REACT TO PREVENT LOSS (DAMAGE) TO A VEHICLE SYSTEM.	3
			a. 2)BRAKES WILL NOT RELEASE	DRUM WILL NOT ROTATE UNTIL REPAIRED.	NO EFFECT.	3
28J2684 22	FRONT/REAR DRUM CONTROL VALVE (2) MANUALLY OPERATED	CONTROLS HYDRAULIC FLOW TO HOIST OR LOWER FRONT/REAR DRUM.	a. VALVE FAILS IN HOIST POSITION	FRONT/REAR DRUM WOULD ROTATE, TAKING IN WIRE ROPE UNTIL OPERATOR INTERVENTION BY CLUTCH DISENGAGEMENT, BRAKE APPLICATION, PAWL ENGAGEMENT AND ENGINE SHUTDOWN TO TERMINATE HYDRAULIC PRESSURE. DELAY FOR REPAIRS	NO EFFECT.	3

Table 11 (Page 3 of 6). **MECHANICAL FMEA - UPPER CRANE FRONT/REAR MAIN HOISTS**

System LINK BELT 250-TON TRUCK CRANE
Subsystem UPPER CRANE FRONT/REAR DRUM SHAFT ASSY.
Drawing No. BOOK #654 **Sheet No.** NA
PMN H72-1390

Program SPACE SHUTTLE

Station Set/Facility Code 99
Date AUGUST 1993
Reference Figure Used 10.
Prepared By B. KALLE, LSOC 52-11

FIND NO. PART NO.	PART NAME	PART FUNCTION	a. FAILURE MODE b. CAUSE c. FMN d. DETECTION METHOD e. CORRECTING ACTION f. TIME TO EFFECT g. TIMEFRAME	FAILURE EFFECT ON SYSTEM PERFORMANCE	FAILURE EFFECT ON VEHICLE SYSTEMS AND/OR PERSONNEL SAFETY	CRIT CAT
			a. VALVE FAILS IN LOWER POSITION b. VALVE JAMS c. NA d. VISUAL e. APPLICATION OF ADDITIONAL MANUAL BRAKING OR PAWL ENGAGEMENT. f. SECONDS g. IMMEDIATE TO SECONDS	FRONT/REAR DRUM WOULD ROTATE, FEEDING OUT WIRE ROPE UNTIL OPERATOR INTERVENTION BY CLUTCH DISENGAGEMENT, BRAKE APPLICATION, PAWL ENGAGEMENT AND ENGINE SHUTDOWN TO TERMINATE HYDRAULIC PRESSURE. DELAY FOR REPAIRS.	NO EFFECT. THERE SHOULD BE SUFFICIENT TIME FOR THE OPERATOR TO REACT TO PREVENT LOSS (DAMAGE) TO A VEHICLE SYSTEM.	3
28J3227 24	FRONT/REAR DRUM BRAKE CONTROL VALVE (2) MANUALLY OPERATED FOOT PEDAL	VALVE CONTROLS HYDRAULIC FLOW TO FRONT/REAR DRUM BRAKE CALIPER.	a. VALVE FAILS IN BRAKE SET POSITION	FRONT/REAR DRUM BRAKE APPLIED AND DRUM WILL NOT ROTATE UNTIL REPAIRED.	NO EFFECT.	3
			a. VALVE FAILS IN BRAKE RELEASE POSITION b. VALVE JAMS c. NA d. VISUAL e. APPLICATION OF ADDITIONAL MANUAL BRAKING OR PAWL ENGAGEMENT. f. SECONDS g. IMMEDIATE TO SECONDS	FRONT/REAR DRUM BRAKE NO OPERABLE. OPERATOR INTERVENTION REQUIRED TO STOP DRUM ROTATION. PAWL ENGAGEMENT AND ENGINE SHUTDOWN WILL LOOK UP SPRING ACTIVATED BRAKES. DELAY FOR REPAIRS.	NO EFFECT. THERE SHOULD BE SUFFICIENT TIME FOR THE OPERATOR TO REACT TO PREVENT LOSS (DAMAGE) TO A VEHICLE SYSTEM.	3

Table 11 (Page 4 of 6). **MECHANICAL FMEA - UPPER CRANE FRONT/REAR MAIN HOISTS**

System LINK BELT 250-TON TRUCK CRANE
Subsystem UPPER CRANE FRONT/REAR DRUM SHAFT ASSY.
Drawing No. BOOK #654 **Sheet No.** NA
PMN H72-1390

Program SPACE SHUTTLE

Station Set/Facility Code 99
Date AUGUST 1993
Reference Figure Used 10.
Prepared By B. KALLE, LSOC 52-11

FIND NO. PART NO.	PART NAME	PART FUNCTION	a. FAILURE MODE b. CAUSE c. FMN d. DETECTION METHOD e. CORRECTING ACTION f. TIME TO EFFECT g. TIMEFRAME	FAILURE EFFECT ON SYSTEM PERFORMANCE	FAILURE EFFECT ON VEHICLE SYSTEMS AND/OR PERSONNEL SAFETY	CRIT CAT
28J3292 25	FORWARD/ REAR PAWL ROTARY CONTROL VALVE (2) SOLENOID OPERATED	VALVE CONTROLS HYDRAULIC FLOW TO EXPAND OR COMPRESS THE CYLINDER IN THE PAWL DISENGAGE LINKAGE.	a. VALVE FAILS IN PAWL RELEASE POSITION b. VALVE JAMS c. NA d. PAWL ENGAGE/DISENGAGE LIGHT e. APPLICATION OF ADDITIONAL MANUAL BRAKING. f. SECONDS g. IMMEDIATE TO SECONDS	THE PAWL WILL DISENGAGE AND REMAIN UNTIL REPAIRED. THE OPERATOR CAN INTERVENE BY MANIPULATING CLUTCH, BRAKES, OR ENGINE SPEED TO CONTROL OR LOWER A SUSPENDED LOAD.	NO EFFECT. THERE SHOULD BE SUFFICIENT TIME FOR THE OPERATOR TO REACT TO PREVENT LOSS (DAMAGE) TO A VEHICLE SYSTEM.	3
			a. VALVE FAILS IN PAWL ENGAGE POSITION	THE PAWL WILL ENGAGE THE DRUM ALLOWING HOISTING ROTATION ONLY. THE DRUM CANNOT BE ROTATED IN A LOWERING DIRECTION UNTIL REPAIRED.	NO EFFECT.	3

Table 11 (Page 5 of 6). **MECHANICAL FMEA - UPPER CRANE FRONT/REAR MAIN HOISTS**

System LINK BELT 250-TON TRUCK CRANE
Subsystem UPPER CRANE FRONT/REAR DRUM SHAFT ASSY.
Drawing No. BOOK #654 **Sheet No.** NA
PMN H72-1390

Program SPACE SHUTTLE

Station Set/Facility Code 99
Date AUGUST 1993
Reference Figure Used 10.
Prepared By B. KALLE, LSOC 52-11

FIND NO. PART NO.	PART NAME	PART FUNCTION	a. FAILURE MODE b. CAUSE c. FMN d. DETECTION METHOD e. CORRECTING ACTION f. TIME TO EFFECT g. TIMEFRAME	FAILURE EFFECT ON SYSTEM PERFORMANCE	FAILURE EFFECT ON VEHICLE SYSTEMS AND/OR PERSONNEL SAFETY	CRIT CAT
28J2724 43	SINGLE ACTING CYLINDER (4) a. FRONT DRUM HOIST CLUTCH b. FRONT DRUM LOW-ERING CLUTCH c. REAR DRUM LOW-ERING CLUTCH d. REAR DRUM HOIST CLUTCH	THE CYLINDER EXPANDS AS THE PISTONS EXTEND FROM THE CYLINDER WITH AN INCREASE IN HYDRAULIC FLUID. THE PISTONS ROTATE ONE END OF A LEVER ATTACHED TO A SHAFT AND A SECONDARY LEVER. THE FIRST LEVER APPLIES A TORQUE TO THE SHAFT AND THE SECONDARY LEVER. THIS ACTION OPERATES THE CLUTCH SHOES WITH A CANTILEVER MOTION.	a. CYLINDER INOPERATIVE	THE CLUTCH (HOISTING OR LOW-ERING) ON THE AFFECTED DRUM (FRONT OR REAR) WILL NOT ENGAGE OR DISENGAGE. DELAY FOR REPAIRS.	NO EFFECT.	3
28J2730 44	SINGLE ACTION CYLINDER (REAR DRUM ONLY)	THE CYLINDER ACTIVATES THE PLANETARY BRAKE ASSEMBLY.	a. CYLINDER INOPERATIVE	THE PLANETARY BRAKE WOULD BE INOPERABLE. DELAY FOR REPAIRS.	NO EFFECT.	3

Table 11 (Page 6 of 6). **MECHANICAL FMEA - UPPER CRANE FRONT/REAR MAIN HOISTS**

System LINK BELT 250-TON TRUCK CRANE
Subsystem UPPER CRANE FRONT/REAR DRUM SHAFT ASSY.
Drawing No. BOOK #654 **Sheet No.** NA
PMN H72-1390

Program SPACE SHUTTLE

Station Set/Facility Code 99
Date AUGUST 1993
Reference Figure Used 10.
Prepared By B. KALLE, LSOC 52-11

FIND NO. PART NO.	PART NAME	PART FUNCTION	a. FAILURE MODE b. CAUSE c. FMN d. DETECTION METHOD e. CORRECTING ACTION f. TIME TO EFFECT g. TIMEFRAME	FAILURE EFFECT ON SYSTEM PERFORMANCE	FAILURE EFFECT ON VEHICLE SYSTEMS AND/OR PERSONNEL SAFETY	CRIT CAT
28J2253 45	DOUBLE ACTING CYLINDER (3) a. BOOM HOIST PAWL b. FORWARD DRUM PAWL c. REAR DRUM PAWL	THE CYLINDER ENGAGES OR DISENGAGES THE PAWLS.	a. CYLINDER INOPERATIVE	THE DRUM PAWL MECHANISMS WOULD NOT RESPOND TO OPERATOR CONTROL ACTIONS. THE PAWLS COULD NOT BE ENGAGED OR DISENGAGED. IF THE PAWL DOES NOT ENGAGE, THE BOOM HOIST BRAKES ARE RELEASED AND APPLIED AUTOMATICALLY. MAIN HOIST BRAKES ARE MANUALLY SET FULL ON AND BACKED OFF TO ALLOW MOTION.	NO EFFECT.	3

5.2 ELECTRICAL FMEA

The electrical components of the critical functions assessed in section 4.0 for this system were identified from the documents and diagrams referenced in the Documentation List and are depicted on the following figure(s) and analyzed in the associated Electrical FMEA (Worksheet 5122-016).

ELECTRICAL FAILURE MODES AND EFFECTS ANALYSIS

FOR THE

Link Belt 250-Ton Truck Crane

PMN H72-1390

Wire harnesses, cables, or connectors were not analyzed in the Electrical FMEA for this system since a single failure (open or short) could not result in loss of life or vehicle. (Ref. NSTS 22206 section 4.0, paragraph 4.4.1, subparagraph b[2])

All carrier electrical functions are non critical and therefore were not analyzed.

Table 12 (Page 1 of 3). **ELECTRICAL FMEA - UPPER ELECTRICAL SYSTEMS**

System LINK BELT 250-TON TRUCK CRANE
Subsystem UPPER ELECTRICAL SYSTEMS
Drawing No. 28R0050-E **Sheet No.** 1
PMN H70-1390

Program SPACE SHUTTLE

Station Set/Facility Code 99
Date AUGUST 1993
Reference Figure Used
Prepared By B. KALLE, LSOC 52-11

FIND NO. PART NO.	PART NAME	PART FUNCTION	a. FAILURE MODE b. CAUSE c. FMN d. DETECTION METHOD e. CORRECTING ACTION f. TIME TO EFFECT g. TIMEFRAME	FAILURE EFFECT ON SYSTEM PERFORMANCE	FAILURE EFFECT ON VEHICLE SYSTEMS AND/OR PERSONNEL SAFETY	CRIT CAT
6-48-34.13 36A2990	SOLENOID (2)	CONTROLLED BY THE IGNITION SWITCH. DISTRIBUTES POWER TO THE ELECTRICAL SYSTEM.	a. FAILS CLOSED	UNABLE TO DEENERGIZE THE ELECTRICAL SYSTEM.	NO EFFECT.	3
			a. FAILS OPEN	ELECTRICAL SYSTEM DISABLED. DELAY FOR REPAIRS.	NO EFFECT.	3
NA	IGNITION SWITCH	APPLIES POWER TO THE ELECTRICAL SYSTEM. CAN FUNCTION AS E-STOP.	a. FAILS CLOSED	UNABLE TO DEENERGIZE THE ELECTRICAL SYSTEM.	NO EFFECT.	3
			a. FAILS OPEN	ELECTRICAL SYSTEM DISABLED. DELAY FOR REPAIRS.	NO EFFECT.	3
NA	PLANETARY CONTROL BUTTON (REAR DRUM CONTROL HANDLE)	ENGAGES OR DISENGAGES REAR PLANETARY GEAR FOR HIGH SPEED HOIST FUNCTION.	a. FAILS CLOSED	NORMAL HOIST SPEED DISABLED. HOIST WILL REMAIN IN HIGH SPEED MODE. DELAY FOR REPAIRS.	NO EFFECT.	3
			a. FAILS OPEN	LOSS OF HIGH SPEED REAR HOIST FUNCTION. DELAY FOR REPAIRS.	NO EFFECT.	3
NA	CONTROL SHUTDOWN SWITCH	ENABLES/DISABLES BOOM HOIST AND SWING CONTROLS.	a. FAILS OPEN	BOOM AND SWING FUNCTIONS OF CRANE ARE DISABLED. DELAY FOR REPAIRS.	NO EFFECT.	3
			a. FAILS CLOSED	BOOM AND SWING FUNCTIONS ARE ENABLED. DELAY FOR REPAIRS.	NO EFFECT.	3
13 28R00020	BRAKE APPLY PRESSURE SWITCH	ENABLES HYDRAULIC CONTROLS ONCE SYSTEM PRESSURE EXCEEDS 1450 PSI. DISABLES CONTROLS AND SETS SPRING ACTIVATED BRAKES IF SYSTEM PRESSURE DROPS OFF.	a. FAILS OPEN	CRANE HYDRAULIC CONTROLS REMAIN DISABLED. DELAY FOR REPAIRS.	NO EFFECT.	3

Table 12 (Page 2 of 3). **ELECTRICAL FMEA - UPPER ELECTRICAL SYSTEMS**

System LINK BELT 250-TON TRUCK CRANE
Subsystem UPPER ELECTRICAL SYSTEMS
Drawing No. 28R0050-E **Sheet No.** 1
PMN H70-1390

Program SPACE SHUTTLE

Station Set/Facility Code 99
Date AUGUST 1993
Reference Figure Used
Prepared By B. KALLE, LSOC 52-11

FIND NO. PART NO.	PART NAME	PART FUNCTION	a. FAILURE MODE b. CAUSE c. FMN d. DETECTION METHOD e. CORRECTING ACTION f. TIME TO EFFECT g. TIMEFRAME	FAILURE EFFECT ON SYSTEM PERFORMANCE	FAILURE EFFECT ON VEHICLE SYSTEMS AND/OR PERSONNEL SAFETY	CRIT CAT
			a. FAILS CLOSED	OPERATIONS CAN CONTINUE WITH INSUFFICIENT BRAKE PRESSURE IF OPERATOR FAILS TO NOTE PRESSURE DROP ON GAUGE. REPAIRS.	NO EFFECT. MULTIPLE FAILURES AS WELL AS OPERATOR ERROR REQUIRED.	3
NA	BOOM ANGLE LIMIT SWITCH	SWITCH LIMITS ANGULAR TRAVEL OF BOOM.	a. FAILS OPEN	BOOM HOIST FUNCTION DISABLED. DELAY FOR REPAIRS.	NO EFFECT.	3
			a. FAILS CLOSED	LOSS OF BOOM OVERTRAVEL PROTECTION.	NO EFFECT. MULTIPLE FAILURES AND/OR HUMAN ERROR REQUIRED.	3
NA	BOOM HOIST BYPASS SWITCH	OPERATOR CONTROLLED SWITCH TO OVERRIDE THE BOOM ANGLE LIMIT SWITCH.	a. FAILS CLOSED	LOSS OF BOOM OVERTRAVEL PROTECTION.	NO EFFECT. MULTIPLE FAILURES AND/OR HUMAN ERROR REQUIRED.	3
			a. FAILS OPEN	BOOM ANGLE LIMIT SWITCH CANNOT BE OVERRIDDEN. DELAY FOR REPAIRS.	NO EFFECT.	3
NA	MASTER CLUTCH SWITCH	ENGAGES/DISENGAGES MASTER CLUTCH	a. FAILS CLOSED	MASTER CLUTCH WOULD BE CONSTANTLY ENGAGED. THE SYSTEM COULD BE DEACTIVATED BY SWITCHING OFF IGNITION SWITCH. DELAY FOR REPAIRS.	NO EFFECT.	3
			a. FAILS OPEN	SYSTEMS DERIVING POWER FROM ENGINE TORQUE CONVERTER REMAIN IDLE WITHOUT POWER. DELAY FOR REPAIRS.	NO EFFECT.	3
NA	FRONT/REAR DRUM PAWL SWITCHES (2)	ENGAGES/DISENGAGES FRONT/REAR DRUM PAWLS	a. FAILS OPEN	UNABLE TO DISENGAGE AFFECTED DRUM PAWL. LOSS OF HOIST LOWERING FUNCTION. DELAY FOR REPAIRS.	NO EFFECT.	3

Table 12 (Page 3 of 3). **ELECTRICAL FMEA - UPPER ELECTRICAL SYSTEMS**

System LINK BELT 250-TON TRUCK CRANE
Subsystem UPPER ELECTRICAL SYSTEMS
Drawing No. 28R0050-E **Sheet No.** 1
PMN H70-1390

Program SPACE SHUTTLE

Station Set/Facility Code 99
Date AUGUST 1993
Reference Figure Used
Prepared By B. KALLE, LSOC 52-11

FIND NO. PART NO.	PART NAME	PART FUNCTION	a. FAILURE MODE b. CAUSE c. FMN d. DETECTION METHOD e. CORRECTING ACTION f. TIME TO EFFECT g. TIMEFRAME	FAILURE EFFECT ON SYSTEM PERFORMANCE	FAILURE EFFECT ON VEHICLE SYSTEMS AND/OR PERSONNEL SAFETY	CRIT CAT
NA	FRONT/REAR DRUM PAWL POSITION SWITCHES	INDICATES WHETHER FRONT/REAR DRUM PAWLS ARE ENGAGED BY LIGHTING INDICATOR LIGHT.	a. FAILS CLOSED	UNABLE TO ENGAGE AFFECTED DRUM PAWL ONCE ELECTRICAL SYSTEM IS ENERGIZED.	NO EFFECT	3
			a. FAILS OPEN	INDICATES AFFECTED PAWL IS DISENGAGED REGARDLESS OF POSITION. DELAY FOR REPAIRS.	NO EFFECT	3
			a. FAILS OPEN	INDICATES AFFECTED PAWL IS ENGAGED REGARDLESS OF POSITION. DELAY FOR REPAIRS.	NO EFFECT	3

5.3 FLEXHOSE FMEA

Failure of any flexhose associated with any critical function assessed in section 4.0 will result in a automatic system shutdown and therefore non critical. No flexhose FMEA required.

5.4 ORIFICE FMEA

There are no orifices associated with this system.

5.5 FILTER FMEA

The filters which serve the critical functions assessed in section 4.0 for this system were identified and analyzed on the following Filter FMEA (Worksheet 5122-010). No critical filters were identified in this system.

Table 13. **FILTER FMEA - LOWER HYDRAULIC OUTRIGGERS**

System LINK BELT 250-TON TRUCK CRANE
Subsystem LOWER HYDRAULIC OUTRIGGERS
Drawing No. 28A3314-D **Sheet No.** 1
PMN H70-1390

Program SPACE SHUTTLE

Station Set/Facility Code 99
Date AUGUST 1993
Prepared By B. KALLE, LSOC 52-11

FIND NO. NASA PART NO.	MFG NAME MFG PART NO.	PART FUNCTION	FILTER RATING	DESIGN/BURST PRESSURE (PSIG)	ELEMENT COLLAPSE PRESSURE (PSID)	FAILURE MODE	FAILURE EFFECT ON SYSTEM PERFORMANCE/VEHICLE SYSTEMS AND/OR PERSONNEL SAFETY	CRIT CAT
NA	FILTER ASSY. 25J0675	FILTERS HYDRAULIC FLUID AT THE RESER-VOIR RETURN PORT.	25 U ABS.	NA	NA	CLOGS	RESTRICTS OR TERMINATES HYDRAULIC FLOW.	3
						PASSES CONTAM-INANTS	DOWNSTREAM BLOCKAGE OF SYSTEM COMPONENTS.	3

Table 14. **FILTER FMEA - UPPER HYDRAULIC SYSTEM**

System LINK BELT 250-TON TRUCK CRANE
Subsystem UPPER HYDRAULIC SYSTEM
Drawing No. 28A3314-D **Sheet No.** 1.
PMN H70-1390

Program SPACE SHUTTLE

Station Set/Facility Code 99
Date AUGUST 1993
Prepared By B. KALLE, LSOC 52-11

FIND NO. NASA PART NO.	MFG NAME MFG PART NO.	PART FUNCTION	FILTER RATING	DESIGN/BURST PRESSURE (PSIG)	ELEMENT COLLAPSE PRESSURE (PSID)	FAILURE MODE	FAILURE EFFECT ON SYSTEM PERFORMANCE/VEHICLE SYSTEMS AND/OR PERSONNEL SAFETY	CRIT CAT
#2	STRAINER JC3896	STRAINS FLUID OF LARGE IMPURITIES.	NA	NA	NA	CLOGS	MINIMUM OR REDUCED FLOW.	3
						PASSES CONTAMINANTS	IMPURITIES PASSED DOWNSTREAM WITH POSSIBILITY OF CLOGGED SYSTEM.	3
#3	STRAINER 17J0041	STRAINS FLUID OF LARGE IMPURITIES.	NA	NA	NA	CLOGS	MINIMUM OR REDUCED FLOW.	3
						PASSES CONTAMINANTS	IMPURITIES PASSED DOWNSTREAM WITH POSSIBILITY OF CLOGGED SYSTEM.	3
#6	FILTER, 32J4571 (3)	TO FILTER OUT SMALLER IMPURITIES.	NA	NA	NA	CLOGS	REDUCED OR TERMINATED FLOW.	3
						RUPTURES	CONTAMINANTS PASSING THROUGH SYSTEM CAUSING DOWNSTREAM RESTRICTIONS.	3

6.0 CRITICAL ITEMS LIST

There were no Critical Items identified in this system.

7.0 HAZARD ANALYSIS

The hazard analysis for the Link Belt 250-Ton Truck Crane HC-268 System was conducted in accordance with NSTS 22254 and KHB 5310.9. The objective of this analysis is to:

- Document the hazards identified from the analysis of the Link Belt 250-Ton Truck Crane HC-268 system
- Provide visibility of the risks associated with operation of the system
- Evaluate the adequacy of existing controls for the identified hazards
- Propose additional controls and new hazard reports as required

7.1 SAFETY CRITICALITY ASSESSMENT

The Link Belt 250-Ton Truck Crane HC-268 System is assessed as Safety Critical because it is "Equipment Used for Handling Program Hardware." (KHB 5310.9, Appendix Aj).

7.2 SCOPE

The following were assessed in the preparation of this hazard analysis:

- Design hazards that could result in damage to flight hardware or injury to personnel
- Operational/procedural hazards that occur during system use
- Functional interfaces to determine if any hazardous conditions exist across the interfaces upstream and downstream of the equipment/system

7.3 SUMMARY OF ANALYSIS

System Safety Engineering has completed an analysis of the Link Belt 250-Ton Truck Crane. Drawings associated with the equipment were reviewed and the system was analyzed with emphasis on mechanical, electrical and hydraulic aspects. A KSC/RT Safety and Reliability Hazard Data Base search for hazard reports pertaining to this analysis was performed by Baseline (B/L) Number, Program Model Number (PMN) and Station Set (SS). There were three associated hazards identified during this analysis which are presented below:

1) Hazard Report SAA05MH43-003 HO1 identifies the potential for damage to flight hardware or injury to personnel should hydraulic pressure be lost to the crane's outriggers causing the outriggers to collapse. Should the outriggers collapse while the crane is performing a lift, the crane may topple and drop the load. OMI Q3205 verifies the outriggers are fully extended and blocked during pre-operation setup. OMI Q3205 performs a walk-around inspection of the mobile crane to verify the outriggers are blocked to within 1/8 inch of the outrigger beams.

2) Hazard Report SAA05MH43-003 HO2 identifies the potential for loss of the Orbiter and/or injury to personnel due to lifting of the Orbiter during excessive winds. Wind velocities specified by OMRSD requirements are implemented by OMI S5044. OMI S5044 verifies wind condi-

tions prior to the start of lifting operations. In addition, instructions for securing the Orbiter if high winds arise during Orbiter/SCA mate are detailed in OMI S5044.

3) Hazard Report RT-ENG-1019 identified requirements for personnel to perform work while beneath a suspended load during Orbiter/SCA mate which could lead to personnel loss of life should the crane fail during operations. Precautions, identified in OMI S5044 are taken to ensure only designated personnel are allowed under the suspended load, crane operators and observers are certified, trained and briefed, and all applicable preventive maintenance has been performed on the crane and lifting equipment. For additional information, see the attached hazard reports.

A qualitative fault tree analysis was developed with the top event identified as "Personnel Injury/Loss of Life and/or Damage/Loss of GSE FHW." Potential hazardous conditions leading to the top event were identified and are assessed on the attached Space Shuttle System Hazard Analysis Worksheets.

HAZARD ANALYSIS DOCUMENTATION

SAA Number	System / Subsystem
SAA09FT01-004, Rev. A	The Link Belt 250-Ton Truck Crane

See SAA Cover Sheet for applicable Baseline Number(s), Program Model Number(s), Work Unit Code(s) and Station Set(s).

The Hazard Analysis was based on the following documentation:

Document Number	Title	
NSTS 22254	-	Methodology For Conduct Of NSTS Hazard Analyses
NSS/GO1740.9B	-	NASA Safety Standard For Lifting Devices & Equipment
Book No. 653	NA	Model HC-268 Operators & Maintenance Manual (Link-Belt)
Book No. 654	NA	Model HC-268 Parts Manual (Link-Belt)
28A3314-D	Basic	Hydraulic Schematic
28J3353-E	B	HC-268 Hydrazine Schematic w/Hydrostatic Swing 8. B.H.
28R0050-E	Basic	HC-268 Upper Wiring Diagram
28A3397-D	Basic	Carrier Wiring Diagram
1910.180	07/01/87	Code of Federal Regulations Labors (OSHA)
ASME/ANSI 30.5-1989	-	Mobile & Locomotive Cranes
80K51760	-	Yundum Airport, Banjul, The Gambia: Orbiter Mate/Demate & Payload handling Fixture Installation
80K51474	A	Ben Guerir AFB, Morocco: Orbiter Mate/Demate & Payload handling Fixture Installation
80K51804	-	White Sands Missile Range, New Mexico, Orbiter Mate/Demate & Payload handling Fixture Installation
OMI S5044	E	Post Landing Deservicing/Mate to SCA - CLS
OMI Q3506	Basic	Orbiter Mate/Demate Mobile Crane Operation
OMI Q3205	D	Operation of Mobile Cranes
SAA09FT01-011	A	System Assurance Analysis of the Manual Hydra-set Linear Positioning Instruments
SAR 294-400-85-176	-	Safety Analysis Report Submittal - H70-0743-1,2,3
SAR 294-400-85-100	-	Safety Analysis Report Submittal - H70-0790

Safety Engineer	Approved
James H. Mulberry James Mulberry	7-22-93 Supervisor, System Safety Engineering

KSC FORM 29-736 NS (REV. 4/92)

KSC HAZARD REPORT printed 07/26/93 05:59:23 Contractor: **LSOC** page 0

HAZARD NUMBER: **SAA05MH43-003 H01** DATE IDENTIFIED: **01/11/82**
STATUS (O/C): **C** MASTER # **K-SPC-00205-S-KR** TEAM: **A26** LOG # **29**

TITLE: **TRUCK CRANE MAY TOPPLE WHILE LIFTING FLIGHT HARDWARE**

RESP. ORGANIZATION: **LSOC**
LOCATION/STATION SETS: **24,77**
BASELINES: **323.01**
PROGRAM MODEL NOS.:
EFFECTIVITY/MISSION: **26+**

EQUIPMENT CATEGORY: **C** A-SHUTTLE HARDWARE C-SHUTTLE/GSE E-SUPPORT EQUIP.
B-PAYLOAD HARDWARE D-PAYLOAD/GSE F-FACILITY/SITE

RESOLUTION DOC.-- (ESR, EO, INC., OMI, OMRSD FILE 6, OTHER)

CR NUMBER: **50404G**
FMEA/CIL: **SAA05MH43-003** TITLE: **DEMAG TC-4000 TRUCK CRANE FOR CLS**
OMRSD NUMBER: TITLE:
OMI NUMBERS: **Q3205 REV.C1**
ESRS:
OTHER:

TYPE OF HAZARD: **B** A-DESIGN B-OPERATIONAL C-OTHER

TYPE OF ANALYSIS: **D** A-PRELIMINARY B-SUBSYSTEM C-SYSTEM D-OPERATING&SUPP.

HAZARD CLOSURE CLASS.: **C** E-ELIMINATED C-CONTROLLED A-ACCEPTED RISK

HAZARD LEVEL: **CN** CA-CATASTROPHIC CR-CRITICAL CN-CONTROLLED

HAZARD GROUP: **I** SEVERITY: C_S PROBABILITY: A_0

PREPARED BY: **A** A-SPC B-BOC C-PGOC D-Other

SAFETY ENGINEER: **D. G. MAZARY** DATE: **08/11/87**

CONTRACTOR MGMT. APPROVAL(1): **JOHN W. JAMBA** DATE: **04/15/88**

CONTRACTOR MGMT. APPROVAL(2): **LEROY B. SPIVEY** DATE: **04/15/88**

NASA APPROVALS(1): **J. ROBERT LANG** DATE: **04/16/88**

NASA APPROVALS(2): **J. A. THOMAS** DATE: **04/18/88**

DATE APPROVED: CCB: **04/21/88** SSRP: **05/12/88** PRCB: **06/03/88**

FUNCTION KEY: **S** S-NSTS/SHUTTLE I-INDUSTRIAL P-PAYLOAD
A-ADMINISTRATIVE O-OTHER CENTER/CONTRACTOR

KSC Computerized 6-32

HAZARD NUMBER: **SAA05MH43-003 H01** DATE IDENTIFIED: **01/11/82**
STATUS (O/C): **C** MASTER # **K-SPC-00205-S-KR** TEAM: **A26** LOG # **29**

TITLE: **TRUCK CRANE MAY TOPPLE WHILE LIFTING FLIGHT HARDWARE**

HAZARD DESCRIPTION:
The truck crane is used at the contingency landing site for Orbiter mate/demate operations. It has an upper and lower structure; whereas, the upper structure is for hoisting and the lower structure is for mobility.

Hydraulic pressure to outriggers could be lost during lifting operations of Space Shuttle flight hardware.

HAZARD CAUSE(S):
A failure of the hydraulic system causes the outriggers to collapse allowing the crane to topple while lifting a load.

HAZARD EFFECT(S):
Damage to flight hardware and/or injury to personnel.

ENGINEERING/SAFETY REQUIREMENTS:
NSS/GO-1740.9, chapter 3: Mobile Cranes, sequence 3.7.30

"The crane shall be level; where necessary, outriggers shall be extended and/or crane shall be blocked properly before the load is moved."

ELIMINATION/CONTROL/ACCEPTED RISK RATIONALE:
The control for this hazard is the OMI to verify the following sequences:
Seq. 05-006 Outriggers are fully extended.
Seq. 05-007 Outriggers are supporting the crane.
Seq. 05-008 Outriggers are blocked and blocking is snugged up to within one-eighth (1/8) inch of underside of outrigger beams.

VERIFICATION METHODS:
Quality buy off sequence 05-009 will ensure the controls are in place.

REMARKS/COMMENTS: (INCLUDE BACKGROUND, STATUS OF OPEN WORK, INTERFACES WITH FLIGHT HARDWARE, OTHER CENTERS, ETC...)
REMARKS:

The GERB evaluated and assessed this hazard to be controlled and closed.

5/12/88 - SSRP requested update to safety requirements.

HAZARD NUMBER: **SAA05MH43-003 H02** DATE IDENTIFIED: **01/11/82**
STATUS (O/C): **C** MASTER # **K-SPC-00206-S-KR** TEAM: **A26** LOG # **30**

TITLE: **THE DEMAG TC-4000 TRUCK CRANE OPERATIONS RESULT IN ORBITER DAMAGE WHILE LIFTING AT A CONTINGENCY LANDING SITE BECAUSE OF EXCESSIVE WINDS**

RESP. ORGANIZATION: **LSOC**
LOCATION/STATION SETS: **77**
BASELINES: **323.01**
PROGRAM MODEL NOS.:
EFFECTIVITY/MISSION: **26+**

EQUIPMENT CATEGORY: **C** A-SHUTTLE HARDWARE C-SHUTTLE/GSE E-SUPPORT EQUIP.
B-PAYLOAD HARDWARE D-PAYLOAD/GSE F-FACILITY/SITE

RESOLUTION DOC.-- (ESR, EO, INC., OMI, OMRSD FILE 6, OTHER)

CR NUMBER: **50414C**
FMEA/CIL: **SAA05MH43-003** TITLE: **DEMAG TC-4000 TRUCK CRANE FOR CLS**
OMRSD NUMBER: **V00AB0.030** TITLE: **FILE III**
OMI NUMBERS: **S5044**
ESRS:
OTHER:

TYPE OF HAZARD: **B** A-DESIGN B-OPERATIONAL C-OTHER

TYPE OF ANALYSIS: **D** A-PRELIMINARY B-SUBSYSTEM C-SYSTEM D-OPERATING&SUPP.

HAZARD CLOSURE CLASS.: **A** E-ELIMINATED C-CONTROLLED A-ACCEPTED RISK

HAZARD LEVEL: **CA** CA-CATASTROPHIC CR-CRITICAL CN-CONTROLLED

HAZARD GROUP: **I** SEVERITY: C_S PROBABILITY: A_0

PREPARED BY: **A** A-SPC B-BOC C-PGOC D-Other

SAFETY ENGINEER: **D. G. MAZARY** DATE: **08/11/87**

CONTRACTOR MGMT. APPROVAL(1): **JOHN W. JAMBA** DATE: **04/18/88**

CONTRACTOR MGMT. APPROVAL(2): **LEROY B. SPIVEY** DATE: **04/19/88**

NASA APPROVALS(1): **J. ROBERT LANG** DATE: **04/19/88**

NASA APPROVALS(2): **J. A. THOMAS** DATE: **04/20/88**

DATE APPROVED: CCB: **01/05/89** SSRP: **01/11/89** PRCB: **02/03/89**

FUNCTION KEY: **S** S-NSTS/SHUTTLE I-INDUSTRIAL P-PAYLOAD
A-ADMINISTRATIVE O-OTHER CENTER/CONTRACTOR

KSC Computerized 6-32

HAZARD NUMBER: **SAA05MH43-003 H02** DATE IDENTIFIED: **01/11/82**
STATUS (O/C): **C** MASTER # **K-SPC-00206-S-KR** TEAM: **A26** LOG # **30**

TITLE: **THE DEMAG TC-4000 TRUCK CRANE OPERATIONS RESULT IN ORBITER DAMAGE WHILE LIFTING AT A CONTINGENCY LANDING SITE BECAUSE OF EXCESSIVE WINDS**

HAZARD DESCRIPTION:
The truck crane is used at contingency landing sites for Orbiter mate/demate operations. It has an upper and lower structure; whereas, the upper structure is for hoisting and the lower structure is for mobility. The crane lifting capacity is a function of the boom and mast length, standard and additional counterweight and operational radius. High winds would restrict mate/demate lifting operations of the Orbiter with the two mobile crane concept at a remote site.

HAZARD CAUSE(S):
Winds exceeding 12 knots could result in side wind load velocities causing swinging of the Orbiter and stress on the tag lines.

HAZARD EFFECT(S):
Loss of load (Orbiter) and/or injury to personnel.

ENGINEERING/SAFETY REQUIREMENTS:
OMRSD File III, V00AB0.030, "Max Wind Velocities for Hoisting Ops."

ELIMINATION/CONTROL/ACCEPTED RISK RATIONALE:
The lifting operation that is the subject of this report (Orbiter Mate/Demate) is a two mobile crane operation. A 250 ton crane is used in conjunction with the Demag 800 ton truck crane. Tag lines are used to control swinging of the Orbiter.

1. The Demag TC-4000 truck crane is capable of handling up to 800 metric tons (metric ton = 2204 lbs). Under normal operating conditions, the crane load is 150 metric tons; additional counterweights up to 250 metric tons can be added. Total load weight is maximum 50% of the cranes safe working limit.

2. Wind velocities specified in OMRSD File III, V00AB0.030, are implemented by OMI S5044, sequence 44-027 and verified prior to the start of operations, Q-buy included.

3. OMI S5044, sequence 65 contains detailed instructions for securing the Orbiter if high winds arise during mating Orbiter/SCA operations. These instructions, which are dependent on the phase of the operation, involve use of tagline restraint (with winches and a dynamometer).

VERIFICATION METHODS:
OMI S5044, sequence 44-027.

REMARKS/COMMENTS: (INCLUDE BACKGROUND, STATUS OF OPEN WORK, INTERFACES WITH FLIGHT HARDWARE, OTHER CENTERS, ETC...)
REMARKS:

5/12/88 - SSRP changed hazard to an accepted risk/catastrophic due to wind

HAZARD NUMBER: **SAA05MH43-003 H02** DATE IDENTIFIED: **01/11/82**
STATUS (O/C): **C** MASTER # **K-SPC-00206-S-KR** TEAM: **A26** LOG # **30**

TITLE: **THE DEMAG TC-4000 TRUCK CRANE OPERATIONS RESULT IN ORBITER DAMAGE WHILE LIFTING AT A CONTINGENCY LANDING SITE BECAUSE OF EXCESSIVE WINDS**

REMARKS/COMMENTS: (Cont'd)

restrictions and weather unpredictability. PRCB presentation 6/03/88 approved.

1/04/89 - Revised to clarify accepted risk rationale.
1/05/89 - Originally submitted in PCIN 50404G.

1/11/89 - Revised accepted risk rationale to include procedures for securing the Orbiter if high winds arise during Orbiter/SCA mate operations.

HAZARD NUMBER: **RT-ENG-1019** DATE IDENTIFIED: **04/05/88**
STATUS (O/C): **C** MASTER # **K-SPC-00355-I-CR** TEAM: **RT** LOG # **19**

TITLE: **PERSONNEL WORKING UNDER SUSPENDED LOAD FOR SRB PROCESSING (RPSF/VAB), ORBITER STACKING (VAB), SSME MAINTENANCE (VAB/PAD), AND MDD (SLF/CLS/KSC)**

RESP. ORGANIZATION: **SPC/LSOC**
LOCATION/STATION SETS: **20,23,29,31**
BASELINES: **389.00,400.15**
PROGRAM MODEL NOS.: **K60-0531,K60-0533,K60-0534,K60-0562,K60-0563**
EFFECTIVITY/MISSION: **26+**

EQUIPMENT CATEGORY: **A** A-SHUTTLE HARDWARE C-SHUTTLE/GSE E-SUPPORT EQUIP.
B-PAYLOAD HARDWARE D-PAYLOAD/GSE F-FACILITY/SITE

RESOLUTION DOC.-- (ESR, EO, INC., OMI, OMRSD FILE 6, OTHER)

CR NUMBER: **50404N**
FMEA/CIL: **SAA09FY012-005,** TITLE: **SAA09FY012-004**
OMRSD NUMBER: **79K16835** TITLE: **VARIANCE REQUEST MTI 24-80**
OMI NUMBERS: **B5303,B5308,B5309,Q3008,S0004,T5149,V5044,V5E06,V9005**
ESRS:
OTHER:

TYPE OF HAZARD: **B** A-DESIGN B-OPERATIONAL C-OTHER

TYPE OF ANALYSIS: **D** A-PRELIMINARY B-SUBSYSTEM C-SYSTEM D-OPERATING&SUPP.

HAZARD CLOSURE CLASS.: **A** E-ELIMINATED C-CONTROLLED A-ACCEPTED RISK

HAZARD LEVEL: **CA** CA-CATASTROPHIC CR-CRITICAL CN-CONTROLLED

HAZARD GROUP: **I** SEVERITY: C_S PROBABILITY: A_O

PREPARED BY: **A** A-SPC B-BOC C-PGOC D-Other

SAFETY ENGINEER: **RT-ENG** DATE: **04/05/88**

CONTRACTOR MGMT. APPROVAL(1): **JOHN W. JAMBA** DATE: **04/15/88**

CONTRACTOR MGMT. APPROVAL(2): **LEROY B. SPIVEY** DATE: **04/15/88**

NASA APPROVALS(1): **J. ROBERT LANG** DATE: **04/18/88**

NASA APPROVALS(2): **J. A. THOMAS** DATE: **04/23/88**

DATE APPROVED: CCB: **06/07/88** SSRP: **06/22/88** PRCB: **/ /**

FUNCTION KEY: **I** S-NSTS/SHUTTLE I-INDUSTRIAL P-PAYLOAD
A-ADMINISTRATIVE O-OTHER CENTER/CONTRACTOR

KSC Computerized 6-32

HAZARD NUMBER: **RT-ENG-1019** DATE IDENTIFIED: **04/05/88**
STATUS (O/C): **C** MASTER # **K-SPC-00355-I-CR** TEAM: **RT** LOG # **19**

TITLE: **PERSONNEL WORKING UNDER SUSPENDED LOAD FOR SRB PROCESSING (RPSF/VAB), ORBITER STACKING (VAB), SSME MAINTENANCE (VAB/PAD), AND MDD (SLF/CLS/KSC)**

HAZARD DESCRIPTION:
Current KSC procedures for processing Solid Rocket Motors (SRMs) in the RPSF and VAB require personnel to work under a suspended load (Static). Personnel are also required to work under the Orbiter when it is lifted to the vertical position while in the VAB transfer aisle to remove landing gear pins prior to raising the gear. In the event an engine change or turbo pump change is required at the PAD, personnel would be working under the SSME area while the Orbiter is in the Vertical position on the FSS. Also, changing a turbo pump in the engine shop in the Low Bay at the VAB would require working under the engine pump when it is being installed/removed. Personnel are required to work under a suspended load when the Orbiter is mated to the Shuttle Carrier Aircraft (SCA) at DFRF and when the Orbiter is demated from the SCA at KSC to remove/install the landing gear pins. In the OPF, personnel are required to work under a suspended load during installation/removal of the Orbiter's manuevering system (OMS) POD. They are allowed under the load when the OMS post is within 6 inches of the ball socket.

Codes applicable to working under a suspended load are as follows:

A. Occupational Safety and Health Administration (OSHA) standards, 29CFR1910 subpart "N" 1986 edition.

a. 1910.179.n.3.vi (Overhead and Gantry Cranes) "The employer shall require that the operator avoid carrying the loads over people." (Dynamic Condition)
b. 1910.180.h.4.ii (Crawler, Locomotive and Truck Cranes) "No person should be permitted to stand or pass under a load on the hook." (Static Condition)

B. American National Standards Institute (ANSI) 1967, 1968, & 1983 editions read the same.

a. B30.2-3.2.3.e (Overhead and Gantry Cranes) "Loads should not be carried over people. (Dynamic Condition)
b. B30.5-3.2.1.4.e (Crawler, Locomotive and Truck Cranes) "Loads should not be carried over people. (Dynamic Condition)

C. NASA NSS/GO-1740 dated July 1982, (January 1988 Draft read the same).

a. Chapter 2 (Cranes) 2.7.14 "...Loads shall not be moved over people. (Dynamic Condition)

KSC/GP-1098E, Section 2.34, Ground Safety Plan, Volume 1 Safety Requirements contains requirements for a pretest briefing to be conducted just prior to the lift to ensure no open items, all systems and support personnel are ready to support. Loads are not raised, lowered or left suspended any longer than necessary to accomplish the task. In the event of a contingency or if a problem occurs during a lifting operation that prevents the completion of the task, within the shift in which it began, the load will be returned to the prelift

HAZARD NUMBER: **RT-ENG-1019** DATE IDENTIFIED: **04/05/88**
STATUS (O/C): **C** MASTER # **K-SPC-00355-I-CR** TEAM: **RT** LOG # **19**

TITLE: **PERSONNEL WORKING UNDER SUSPENDED LOAD FOR SRB PROCESSING (RPSF/VAB), ORBITER STACKING (VAB), SSME MAINTENANCE (VAB/PAD), AND MDD (SLF/CLS/KSC)**

HAZARD DESCRIPTION: (Cont'd)

position. However, presently there are two exceptions to this: 1) when the SRMs are suspended in the Rotating, Processing and Surge Facility (RPSF) - to be checked and inspected, and 2) during processing and stacking of the SRM segments in the VAB. In the RPSF, the air loads/fiber optic video inspection and ultrasonic inspection could require more than one work-shift. The tang inspection in the VAB requires approximately 12 hours to perform; depending on the problems identified, such as an on-bonding problem, a SRM segment could be suspended in the VAB between 2 and 8 work-shifts.

While the above loads in the RPSF and VAB are suspended, two crane operators continuously monitor the load at their control stations. One crane operator is in the cab and the other crane operator is on the ground with the emergency stop switch.

HAZARD CAUSE(S):
Failure of lifting devices: 200-ton crane in the RPSF, 250-ton crane in the VAB, 10-ton crane in the SSME shop, and the 140-ton 3900T Series 2 crane, the 800-ton TC-4000 Demag, the 250-ton HC-268 Linkbelt truck cranes, and MDD operations at the landing sites. Additional structural failures include the 250-ton hydraset and/or the SRM Four Point Lifting Beam. Any one of these failures could result in dropping the load.

HAZARD EFFECT(S):
Serious injury and/or loss of life to personnel.

ENGINEERING/SAFETY REQUIREMENTS:
KSC GP-1098E, Ground Safety Plan,
OSHA standard 29 CFR 1910, 1986 edition,
ANSI standard, 1983 edition,
NASA NSS/GO-1740, July 1982.

ELIMINATION/CONTROL/ACCEPTED RISK RATIONALE:
At the present time there is not an acceptable method to perform SRM/Orbiter processing and stacking which would prevent personnel from temporarily working under a suspended load (static condition). The necessary operations include segment cleaning, inspection, greasing, measuring, insulation debond repairs, defect analysis, and other functions associated with preparing an SRM segment for mating/stacking to minimize the hazard and reduce the risk to an acceptable level. Each lifting device was thoroughly analyzed in accordance with NSTS 22206 and NSTS 22254. The 175-ton crane, the two 200-ton cranes in the RPSF, and the two 250-ton Bridge Cranes in the VAB completed Design Certification Reviews in January 1988. The only critical items identified pertain to the 250-ton VAB cranes. These critical items are covered in hazard report RT-ENG-1027. The 200-ton cranes in the RPSF are being modified to use DC motors and controls instead of AC to eliminate erratic Trolley and bridge movement.

HAZARD NUMBER: **RT-ENG-1019** DATE IDENTIFIED: **04/05/88**
STATUS (O/C): **C** MASTER # **K-SPC-00355-I-CR** TEAM: **RT** LOG # **19**

TITLE: **PERSONNEL WORKING UNDER SUSPENDED LOAD FOR SRB PROCESSING (RPSF/VAB), ORBITER STACKING (VAB), SSME MAINTENANCE (VAB/PAD), AND MDD (SLF/CLS/KSC)**

ELIMINATION/CONTROL/ACCEPTED RISK RATIONALE: (Cont'd)

At DFRF, the MDD is used to mate the Orbiter to the SCA. At contingency landing sites, the 800-ton TC-4000 Demag and 250-ton HC-268 Linkbelt truck cranes are used to mate the Orbiter to the SCA. The MDD is used to demate the Orbiter from the SCA after it arrives at KSC. No single failure points have been identified on the MDD or the mobile crane lifting devices. Also, the pinned landing gear to be cycled require a landing gear clear area (2 ft. forward, 2 ft. each side, 2 ft. aft and gear doors clear to ground). Clearance must be acknowledged prior to raising/lowering the landing gear and/or removing/installing the gear pins.

The SRM Four-Point Lifting Beam which is used for lifting the SRMs has a design safety factor of greater than 5:1 based on ultimate yield stress. The System Assurance Analysis for the 250-ton Hydraset SAA00KS01-001, identified only one seal which is a Category 2 critical item. The failure effect would be a maximum 1/2" hydraset lowering due to O-ring failure/bleed down. The hydraset structural design safety factor is greater than 5:1 based on ultimate yield stress. In accordance with NASA and Industry standards, initial proofload testing has been accomplished for all segment lifting system components. Annual load testing and scheduled maintenance programs are currently in place (79K Documents) for the KSC lifting hardware.

SAA09FY12-011, 10-ton Bridge Crane, for the Space Shuttle Main Engines (SSME) in the VAB low bay identified two single failure points. The Gear Reducer (Criticality 1) failure mode would require disengagement or structural failure, and the Solenoid Holding Brake (Criticality 1R) failure would be failure to engage, or failure of the Mechanical Load Brake. The four hazards identified include the lack of an upper limit switch (it has one upper switch) and the undetectable failure of either the electric brake and/or the mechanical brake. The fourth hazard pertains to personnel working under a suspended load during SSME turbo pump installation which is included in this accepted risk. A safety analysis was accomplished in SAA09PPF134-001 (preliminary), Hypergol Safing System, in the OPF and indicated no single failure points. SAA09FY01-001, 30-ton Bridge Crane, indicated no single failure points. An analysis on the 10-ton Hydraset was performed in SAA00KS01-002 and indicated 2 single failure points; the seals on the piston head and the seals on the up/down pump assembly. This analysis was a generic KSC center-wide review of all the hydraulic operated hydrasets.

These in-depth system analyses of the lifting devices insure that safety and operational personnel, as well as KSC management, are aware that all potential hazards have been identified and controls established to reduce the risk of working under a suspended load to an acceptable level.

All crane operators are certified and licensed per KMI 6430.4 Examination and Licensing of KSC Facility Crane Operators. Annual physicals for crane operators

HAZARD NUMBER: **RT-ENG-1019** DATE IDENTIFIED: **04/05/88**
STATUS (O/C): **C** MASTER # **K-SPC-00355-I-CR** TEAM: **RT** LOG # **19**

TITLE: **PERSONNEL WORKING UNDER SUSPENDED LOAD FOR SRB PROCESSING (RPSF/VAB), ORBITER STACKING (VAB), SSME MAINTENANCE (VAB/PAD), AND MDD (SLF/CLS/KSC)**

ELIMINATION/CONTROL/ACCEPTED RISK RATIONALE: (Cont'd)

are required. To further minimize these hazards, only the personnel absolutely necessary to perform the operation are allowed to work near or under the suspended load.

All operations at KSC, with regard to working under a suspended load, are under "STATIC CONDITIONS" only. In no case is a load moved over personnel.

VERIFICATION METHODS:
The following OMIs contain steps and/or cautions to alert personel of the hazard and the requirement to minimize time under the suspended load:

RPSF

OMI NUMBER	TASK/OPERATION
B5308	Cleaning of segment tang/capture feature for inspections
B5308	Cleaning of Aft end SRM insulation and J-Joint surfaces for inspections
B5308	Inspection of tang/capture feature (visual)
B5308	Inspection of SRM Aft end insulation, propellant relief flap and J-Joint surfaces (visual)
B5308	Air load/fiber optic video inspection of the capture feature-to-insulation bondline
B5308	Ultrasonic inspection of the insulation bondline behind the capture feature barrier O-ring groove
B5308	Installation/removal of protective pie-shapes over forward insulation and propellant surfaces of SRM while handling ring/end cover assembly is suspended above
B5308	Mating of Aft skirt to RPSF build-up stand support post ball fittings (cleaning surfaces)
B5308	Installation of protective velostat sheeting on tang aft surfaces
B5308	Inspection of SRM leak ports
B5308	Application of grease to bare metal surfaces of tang/capture feature
B5309	Cleaning of SRM Aft segment tang
B5309	Inspection of SRM Aft segment tang and crotch
B5309	Application of grease to Aft segment tang
B5309	Positioning of external tank attach (ETA) Ring on Aft segment stubs
B5309	Installation/removal of protective pie-shapes over forward insulation and propellant surfaces of SRM while handling ring/end cover assembly is suspended above
B5309	Mating of Aft skirt to SRM transportation pallet support post ball fittings.

HAZARD NUMBER: **RT-ENG-1019** DATE IDENTIFIED: **04/05/88**
STATUS (O/C): **C** MASTER # **K-SPC-00355-I-CR** TEAM: **RT** LOG # **19**

TITLE: **PERSONNEL WORKING UNDER SUSPENDED LOAD FOR SRB PROCESSING (RPSF/VAB), ORBITER STACKING (VAB), SSME MAINTENANCE (VAB/PAD), AND MDD (SLF/CLS/KSC)**

VERIFICATION METHODS: (Cont'd)

B5309 Installation of O-ring prior to segment mate. (Segment suspended 3' above another segment. Technicians hands/arms under suspended load).

VAB

(B5303 work) Repairs of defects on SRM insulation, J-Joint, or metal parts in (SRM or FWD ASSY) - not used for STS-26R.

B5303 Cleaning Aft skirt shoes and HDP bearings prior to set down of Aft booster assembly on MLP
B5303 Connection of GEI umbilical plate to bottom of Aft skirt prior to set down of Aft booster assembly on MLP
B5303 Reshimming of HDP Spherical bearings to meet HDP load distribution requirements
B5303 Sighting of HDP Spherical bearing DELTA scales during reshimming operation
B5303 Cleaning of segment tang/capture feature for inspections
B5303 Cleaning of Aft end SRM insulation and J-Joint surfaces for inspections
B5303 Inspection of tang/capture feature (visual)
B5303 Inspection of SRM Aft end insulation, propellant relief flap and J-Joint surfaces (visual)
B5303 Air load/fiber optic video inspection of the capture feature-to-insulation bondline
B5303 Ultrasonic inspection of the insulation bondline behind the capture feature barrier O-ring groove
B5303 SRM tang J-Joint and relief flap profile measurements
B5303 V-2 volume filler installation in tang capture feature
B5303 O-ring and barrier seal installation during field joint mating
B5303 J-Seal abrading
B5303 J-Joint adhesive application
B5303 Final joint closeout inspection
B5303 Field joint assembly fixture (FJAF) installation
B5303 Field joint mating process
B5303 Forward assembly clevis cleaning
B5303 Forward assembly clevis inspection
B5303 Forward assembly clevis grease application
B5303 O-ring groove inspection

T-5149 ET OFFLOAD MOVE AND SECURE IN C/O CELL

ET transporter is driven out from under external tank

HAZARD NUMBER: **RT-ENG-1019** DATE IDENTIFIED: **04/05/88**
STATUS (O/C): **C** MASTER # **K-SPC-00355-I-CR** TEAM: **RT** LOG # **19**

TITLE: **PERSONNEL WORKING UNDER SUSPENDED LOAD FOR SRB PROCESSING (RPSF/VAB), ORBITER STACKING (VAB), SSME MAINTENANCE (VAB/PAD), AND MDD (SLF/CLS/KSC)**

VERIFICATION METHODS: (Cont'd)

(technicians steer transporter).

Disconnect Aft hardpoint- (2 persons under external tank raised slightly off transporter)

VAB ORBITER HANDLING/HOISTING

S0004 Slowly raise both 175-ton and 250-ton cranes until Orbiter main gear clears floor 6 inches +/- 4 inches.

S0004 Remove safety pin (G070-502453) from Nose Landing Gear Door and Ground Pin (GW70-500696-002) from Nose Landing Gear Lock Brace Assembly.

S0004 Remove safety pin (G070-502461-001) from left main gear door and Ground Pin (GW70-500696-003) from left main gear.

S0004 Remove safety pin (G070-502461-001) from right gear door and Ground Pin from the right main gear.

S0004 Inspect tile on and around landing gear doors.

SSME LRU COMPONENT INSTALLATION/REMOVAL IN VAB - LOW BAY

V5E06 Lifting operations in SSME area to remove/install SSME turbo pump.

ORBITER AND SCA MATE/DEMATE

S5022 Orbiter SCA mate/demate at DFRF/KSC

S5044 Orbiter SCA mate/demate at contingency landing sites.

V9005VL1 Hydraulic standard power up/power down for raising/lowering landing gear.

V5011 Q3199 OMS POD removal/installation in the OPF.

REMARKS/COMMENTS: (INCLUDE BACKGROUND, STATUS OF OPEN WORK, INTERFACES WITH FLIGHT HARDWARE, OTHER CENTERS, ETC...)

REMARKS:

6/22/88 - SSRP changed to Industrial. This HR was neither approved nor disapproved with CR 50404N, but left to KSC to control as an Industrial hazard.

HAZARD NUMBER: **RT-ENG-1019** DATE IDENTIFIED: **04/05/88**
STATUS (O/C): **C** MASTER # **K-SPC-00355-I-CR** TEAM: **RT** LOG # **19**

TITLE: **PERSONNEL WORKING UNDER SUSPENDED LOAD FOR SRB PROCESSING (RPSF/VAB), ORBITER STACKING (VAB), SSME MAINTENANCE (VAB/PAD), AND MDD (SLF/CLS/KSC)**

REMARKS/COMMENTS: (Cont'd)

This hazard will be maintained in the KSC Hazard Data Base. Status changed to closed. "Damage to flight hardware" deleted from hazard effect data element.

2/17/89 - Added O-ring inspectoscope operation and references to cranes and OMIs used for Orbiter/SCA mate/demate at DFRF/KSC/CLS. Also added reference to hazard report RT-ENG-1027, which covers the 250-ton VAB crane single failure points.

BACKGROUND:
The Occupational Safety and Health Administration (OSHA) has stated that OSHA will not issue waivers to authorize the exposure of employees working beneath suspended loads. OSHA also states that any work procedures requiring such exposure are done so at the risk of the employer. The following reduces this risk to an acceptable level:

a. All GSE developed for processing and inspection is designed to preclude the exposure of employees under suspended loads where ever possible.

b. All inspection techniques are developed with proper inspection tools that would eliminate inspection procedures under suspended loads where ever possible.

c. In those cases where it is not feasible to eliminate employee exposure working under a suspended load, an appropriate risk assessment must be made to assure the controls employed and the risk acceptance rationale is approved by management.

OPEN WORK:

The current Operations and Maintenance Requirements Specifications (OMRS) for the 200-ton crane in the RPSF and the 250-tone crane in the VAB are 79K27158 and 79K16835. These documents are currently under review and the requirements for the OMRSD File VI are being prepared.

7.4 FAULT TREE ANALYSIS

A qualitative fault tree analysis was developed with the top event identified as "Personnel Injury/Loss of Life and/or Damage/Loss of GSE FHW." Potential hazardous conditions leading to the top event have been assessed on the Hazard Analysis Worksheets located in Section 7.5.

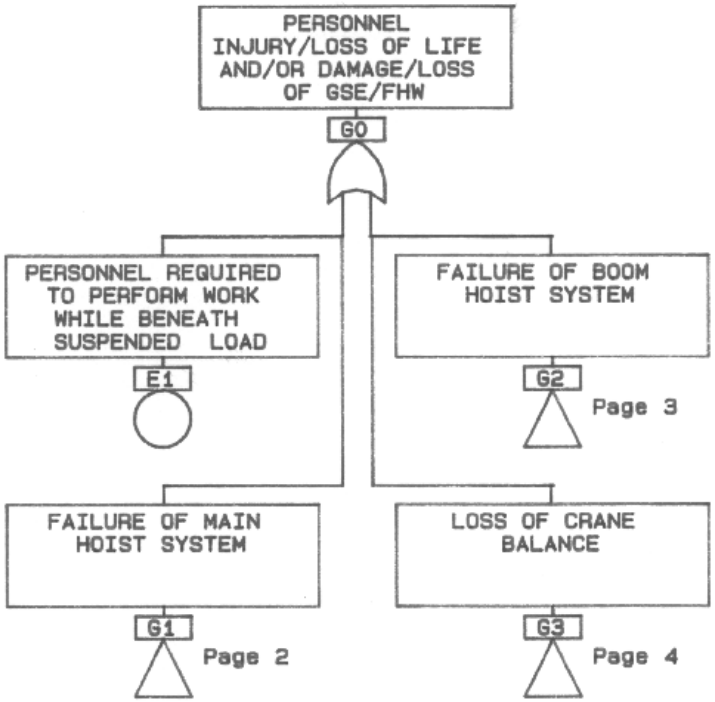

LINK BELT 250-TON TRUCK CRANE	A: 250CRANE.CAF	7/21/93	Page 1

SAA09FT01-004
REV. A

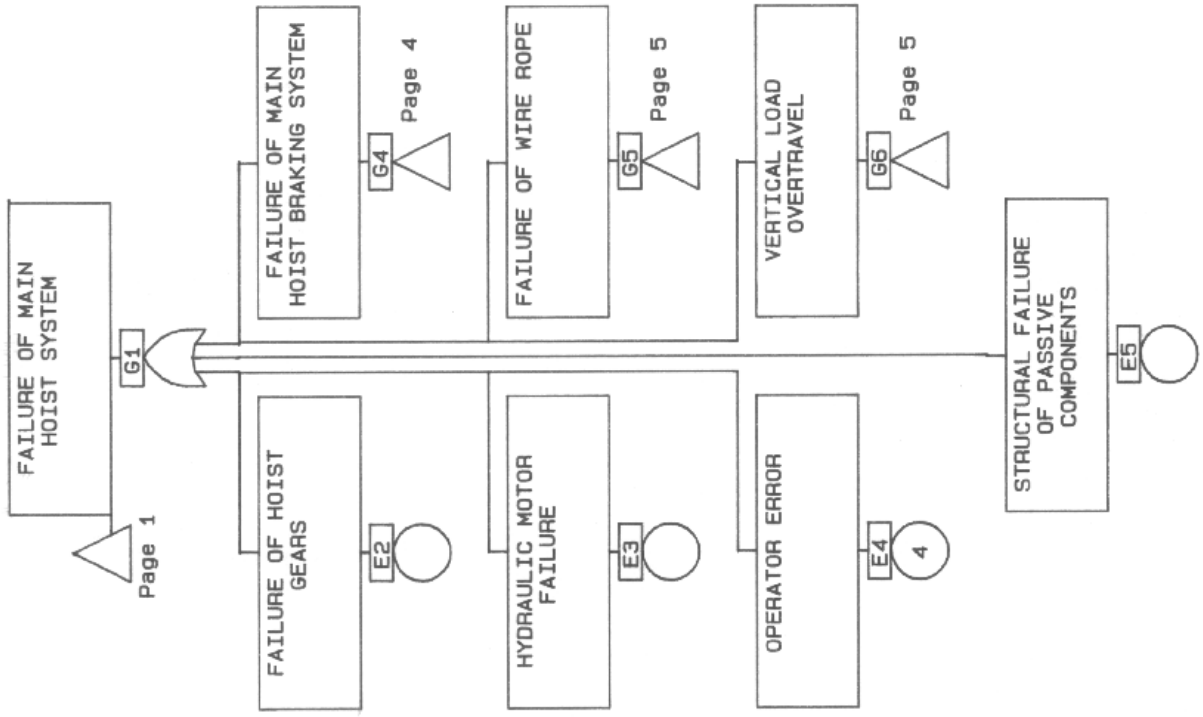

LINK BELT 250-TON TRUCK CRANE | A: 250CRANE.CAF | 7/19/93 | Page 2

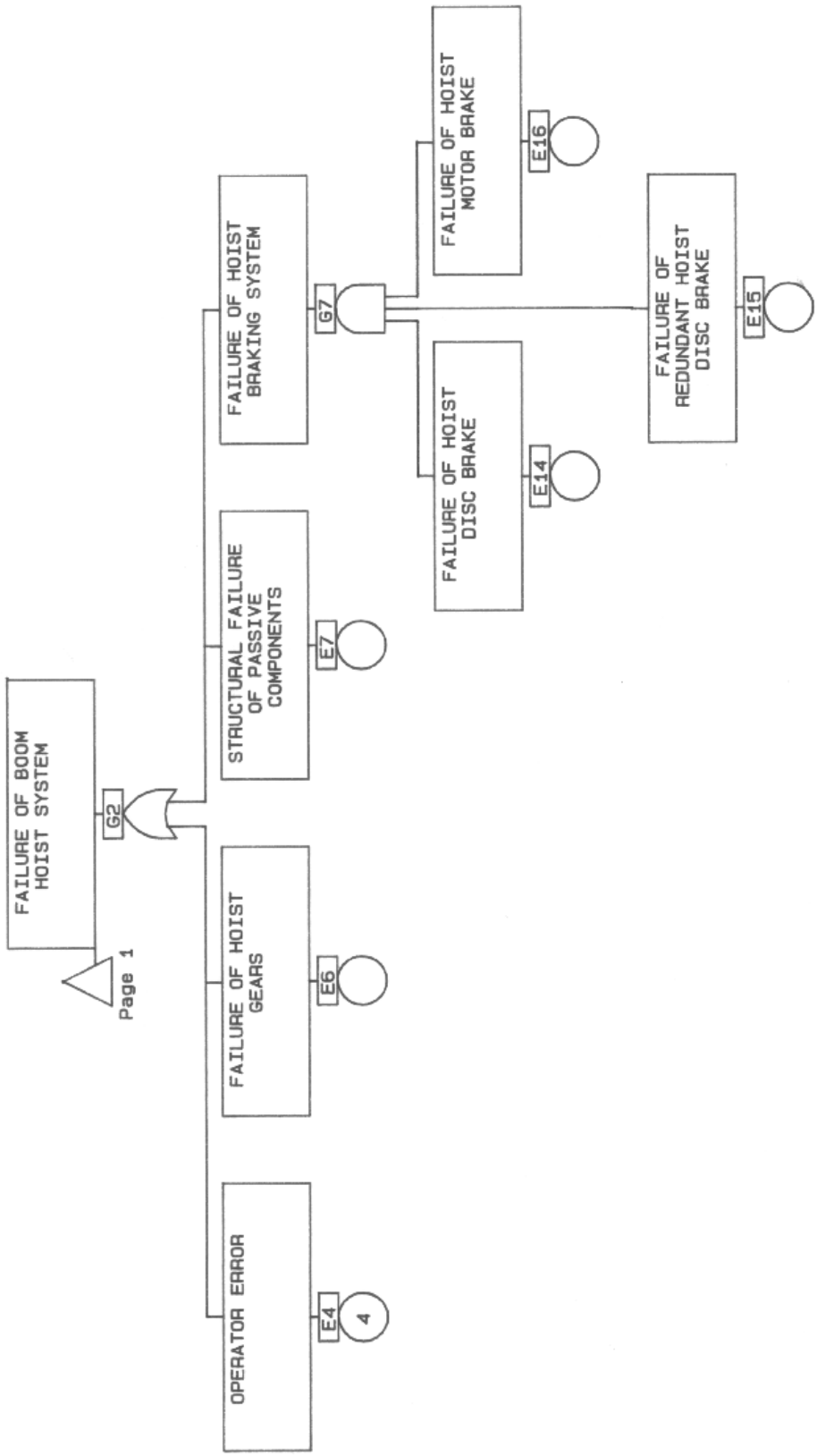

LINK BELT 250-TON TRUCK CRANE | A: 250CRANE.CAF | 7/19/93 | Page 3

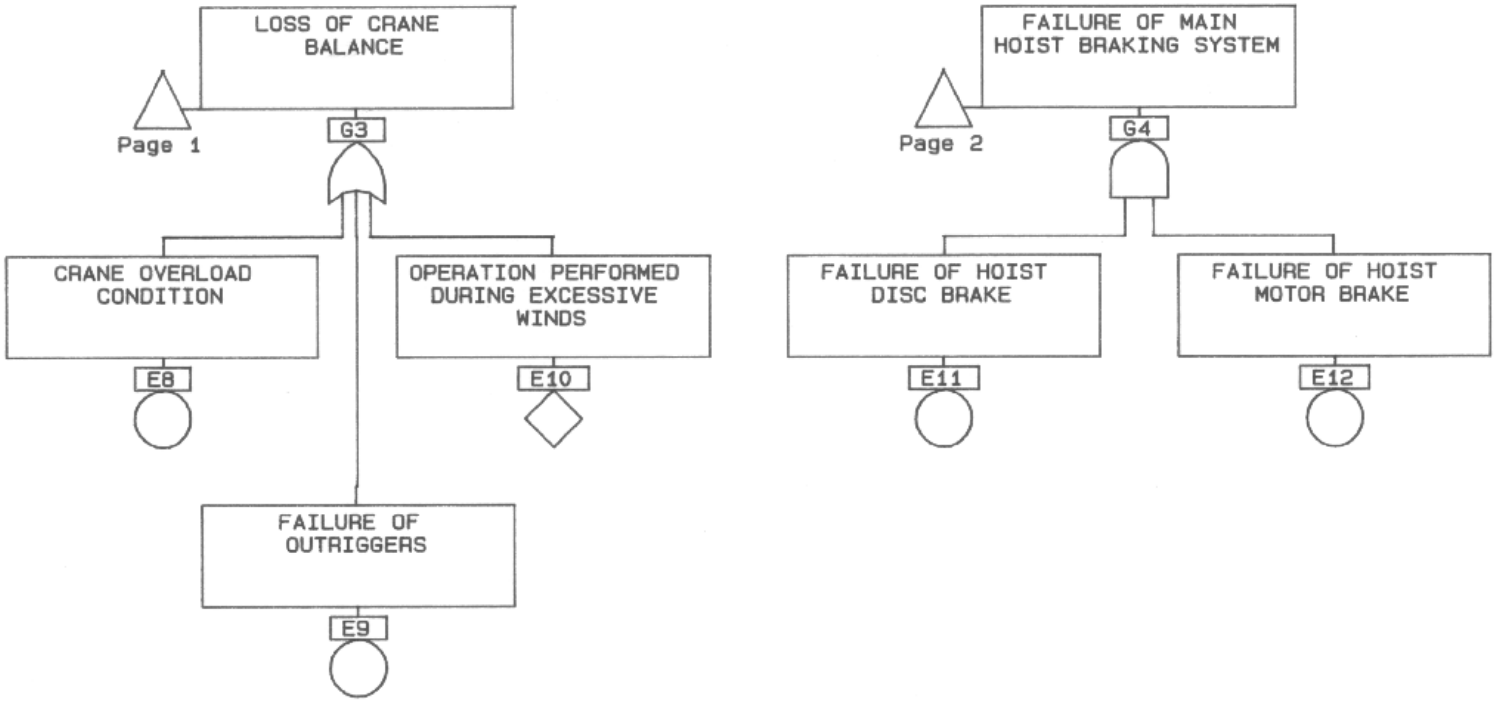

LINK BELT 250-TON TRUCK CRANE	A: 250CRANE.CAF	7/19/93	Page 4

SAA09FT01-004
REV. A

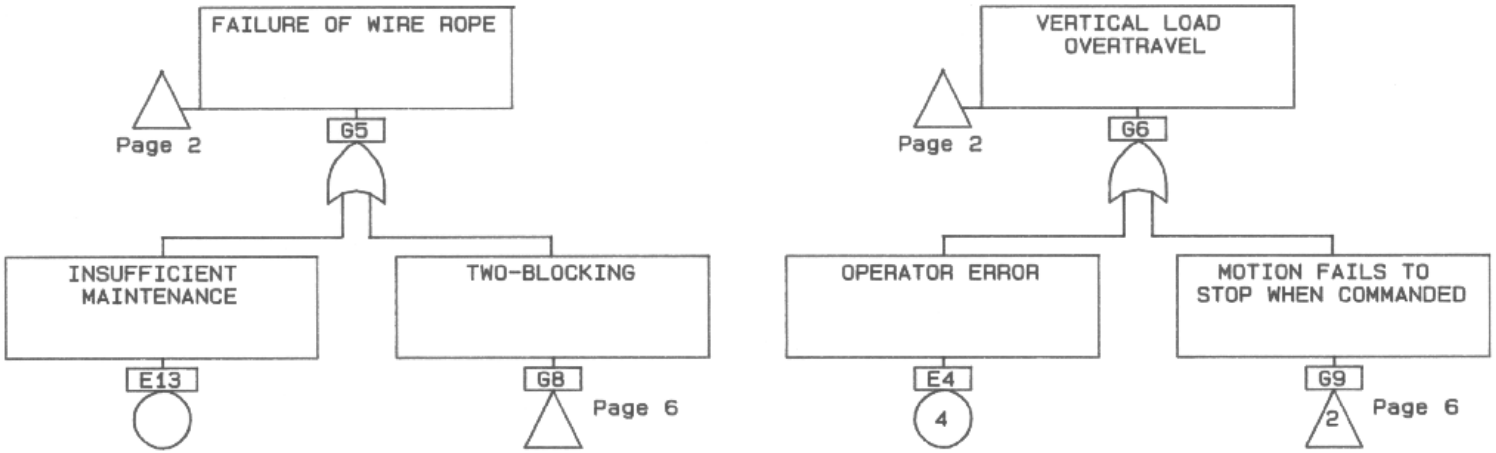

SAA09FT01-004
REV. A

LINK BELT 250-TON TRUCK CRANE	A: 250CRANE.CAF	7/19/93	Page 5

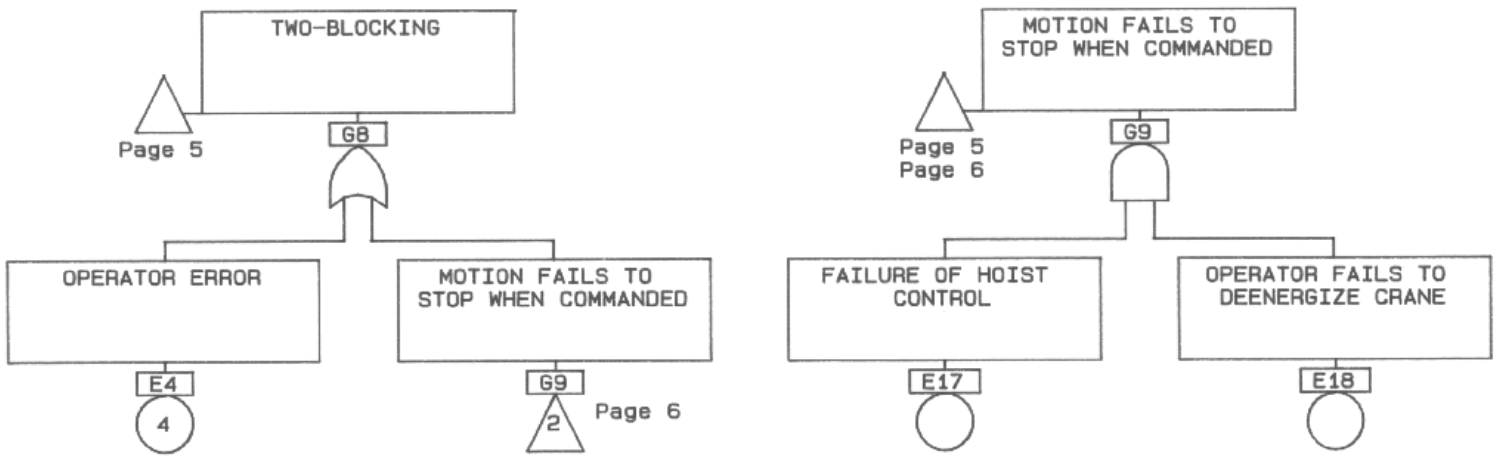

LINK BELT 250-TON TRUCK CRANE	A: 250CRANE.CAF	7/19/93	Page 6

SAA09FT01-004
REV. A

7.5 HAZARD ANALYSIS WORKSHEETS

The Hazard Analysis Worksheets were prepared in conjunction with the fault tree analysis depicting the specific hazardous conditions, causes, effects, safety/engineering requirements, and hazard elimination/control provisions. Worksheets are attached.

Table 15 (Page 1 of 7). **HAZARD ANALYSIS WORKSHEETS**

Phase/Mode Function THE LINK BELT 250-TON TRUCK CRANE HC-268

Task/Operation or Facility CONTINGENCY LANDING SITES

Date AUGUST 1993

Prepared by J. MULBERRY, LSOC 52-11

HAZARDOUS CONDITION	HAZARD CAUSE	HAZARD EFFECT	SAFETY/ENGINEERING REQUIREMENTS	HAZARD ELIMINATION/CONTROL PROVISIONS
(E1) PERSONNEL/ FLIGHT HARD-WARE EXPOSED TO SUSPENDED LOADS	(E1) OPERATIONAL REQUIREMENTS	(G0) PERSONNEL INJURY/LOSS OF LIFE AND/OR DAMAGE/LOSS OF GSE FHW	(E1) GP1098G, 2.36. A LOAD WILL NOT BE LIFTED, TRANS-PORTED OR SUSPENDED OVER PERSONNEL, FLIGHT HARD-WARE OR CRITICAL GSE. OSHA 29 CFR 1910.180, (H)(3)(vi), THE OPERATOR SHOULD AVOID CARRYING LOADS OVER PEOPLE.	(E1) ALL APPLICABLE REQUIREMENTS PERTAINING TO LIFTING OPERATIONS, TRAINING, CERTIFICATION OF OPERATORS, CLEAR AREAS, PRE-OPERATION SETUPS, PROOFLOADS, AND EMERGENCY PROCEDURES WILL BE ADHERED TO. ONLY DESIGNATED PERSONNEL SHALL BE ALLOWED UNDER A SUSPENDED LOAD FOR THE MINIMUM TIME NEEDED TO ACCOMPLISH THE TASK PER OMI S5044. REFERENCE HAZARD REPORT RT-ENG-1019.
(G1) FAILURE OF MAIN HOIST SYSTEM	(G4) FAILURE OF HOIST BRAKING SYSTEM	(G0) PERSONNEL INJURY/LOSS OF LIFE AND/OR DAMAGE/LOSS OF GSE FHW	DEVELOPED UNDER HAZARDOUS CONDITION (G4).	DEVELOPED UNDER HAZARDOUS CONDITION (G4).
	OR			
	(G5) FAILURE OF WIRE ROPE		DEVELOPED UNDER HAZARDOUS CONDITION (G5).	DEVELOPED UNDER HAZARDOUS CONDITION (G5).
	OR			
	(G6) LOAD OVER-TRAVEL VER-TICAL		DEVELOPED UNDER HAZARDOUS CONDITION (G6).	DEVELOPED UNDER HAZARDOUS CONDITION (G6).
	OR			
	(E2) FAILURE OF HOIST GEARS		(E2) NSS/GO 1740.9B, 301(f)(3), GEARING SHALL BE DESIGNED AND MANUFACTURED TO COMPLY WITH THE LATEST AGMA STANDARDS; 302, PROOF LOAD TEST, RATED LOAD TEST AND OPERATIONAL TEST REQUIRED; 303, INSPECTION REQUIREMENTS FOR MOBILE CRANES.	(E2) PROOFLOAD TEST PERFORMED UPON ASSEMBLY OF CRANE PER OMI Q3506. PRE-OPERATION CHECKLIST FOR CRITICAL LIFTS PERFORMED PER OMI Q3205. VERIFICATION OF PREVENTIVE MAINTENANCE PROVIDED BY THE MANUFACTURER.
	OR			

Table 15 (Page 2 of 7). **HAZARD ANALYSIS WORKSHEETS**

Phase/Mode Function THE LINK BELT 250-TON TRUCK CRANE HC-268

Task/Operation or Facility CONTINGENCY LANDING SITES

Date AUGUST 1993

Prepared by J. MULBERRY, LSOC 52-11

HAZARDOUS CONDITION	HAZARD CAUSE	HAZARD EFFECT	SAFETY/ENGINEERING REQUIREMENTS	HAZARD ELIMINATION/CONTROL PROVISIONS
(G1)	(E3)	(G0)	(E3)	(E3)
FAILURE OF MAIN HOIST SYSTEM (CONTINUED)	HYDRAULIC MOTOR FAILURE	PERSONNEL INJURY/LOSS OF LIFE AND/OR DAMAGE/LOSS OF GSE FHW (CONTINUED)	NSS/GO 1740.9B, 302(c), OPERATIONAL TEST REQUIREMENTS FOR MOBILE CRANES; 303, INSPECTION REQUIREMENTS FOR MOBILE CRANES.	OPERATIONAL TEST OF HYDRAULIC SYSTEMS AND CONTROLS PERFORMED BY PRE-OPERATIONS MAINTENANCE CHECKLIST PER OMI Q3205.
	OR			
	(E4)		(E4)	(E4)
	OPERATOR ERROR		NSS/GO 1740.9B, 305(A), ONLY TRAINED AND CERTIFIED PERSONNEL SHALL BE AUTHORIZED TO USE/OPERATE MOBILE CRANES; (B)LEVELS OF OPERATOR TRAINING; 306, OPERATION REQUIREMENTS FOR MOBILE CRANES.	PRE-TEST BRIEFING REQUIRED PRIOR TO OPERATIONS. CRITICAL SKILLS (CSR- 342, 347) VERIFIED PRIOR TO LIFT. EMERGENCY INSTRUCTIONS PROVIDED PER OMIs S5044 AND Q3505.
	OR			
	(E5)		(E5)	(E5)
	STRUCTURAL FAILURE OF PASSIVE COMPONENTS		NSS/GO 1740.9B, 301(e), STRUCTURAL DESIGN SHALL BE IN ACCORDANCE WITH INDUSTRY STANDARDS FOR MATERIAL SELECTION, WELDING, ALLOWABLE STRESS, DESIGN LIMITATIONS, FRAMING, WHEELS AND OTHER ELEMENTS; 302, PROOF LOAD TESTS, RATED LOAD TESTS AND OPERATIONAL TESTS FOR MOBILE CRANES; 303, PERIODIC INSPECTION REQUIREMENTS; 304, PERIODIC MAINTENANCE REQUIREMENTS.	LOAD TEST PERFORMED UPON ASSEMBLY OF CRANE TO 125% OF THE CALCULATED ORBITER WEIGHT. WALK-AROUND INSPECTION OF CRANE TO VERIFY NO VISUAL PROBLEMS EXIST WITH THE EQUIPMENT WHICH WOULD PRECLUDE SATISFACTORY OPERATION OF THE CRANE PER OMI Q3506. PRE-OPERATIONS MAINTENANCE CHECKLIST PERFORMED PRIOR TO OPERATIONS PER OMI Q3205 VERIFICATION OF PERIODIC MAINTENANCE AND INSPECTION PROVIDED BY THE MANUFACTURER.
(G4)	(E11)	(G1)	(E11)(E12)	(E11)(E12)
FAILURE OF MAIN HOIST BRAKING SYSTEM	FAILURE OF HOIST DISK BRAKE	FAILURE OF MAIN HOIST SYSTEM	NSS/GO 1740.9B, 301(f)(8), FOR MOBILE CRANES USED FOR CRITICAL LIFTS, TWO MEANS OF BRAKING SHALL BE PROVIDED, EACH CAPABLE OF BRINGING A RATED LOAD TO ZERO SPEED AND HOLDING IT; 302(c)(6), OPERATIONAL TEST OF HOIST BRAKES REQUIRED; 303, PERIODIC INSPECTION REQUIREMENTS FOR HOIST BRAKES; 304, PREVENTIVE MAINTENANCE REQUIREMENTS FOR HOIST BRAKES.	LOAD TEST PERFORMED UPON ASSEMBLY OF CRANE TO 125% OF THE CALCULATED ORBITER WEIGHT. PRE-OPERATIONS MAINTENANCE CHECKLIST PERFORMED PRIOR TO OPERATIONS PER OMI Q3205.

Table 15 (Page 3 of 7). **HAZARD ANALYSIS WORKSHEETS**

Phase/Mode Function THE LINK BELT 250-TON TRUCK CRANE HC-268

Task/Operation or Facility CONTINGENCY LANDING SITES

Date AUGUST 1993

Prepared by J. MULBERRY, LSOC 52-11

HAZARDOUS CONDITION	HAZARD CAUSE	HAZARD EFFECT	SAFETY/ENGINEERING REQUIREMENTS	HAZARD ELIMINATION/CONTROL PROVISIONS
	AND (E12) FAILURE OF HOIST MOTOR BRAKE			
(G5) FAILURE OF WIRE ROPE	(G8) TWO-BLOCKING	(G1) FAILURE OF MAIN HOIST SYSTEM	DEVELOPED UNDER HAZARDOUS CONDITION (G8).	DEVELOPED UNDER HAZARDOUS CONDITION (G8).
	OR (E13) INSUFFICIENT MAINTENANCE		(E13) NSS/GO 1740.9B, 302, PROOF LOAD TESTS, RATED LOAD TESTS, AND OPERATIONAL TESTS REQUIREMENTS; 303, PERIODIC INSPECTION REQUIREMENTS FOR WIRE ROPES; 304(c)(3), PERIODIC MAINTENANCE REQUIREMENTS FOR WIRE ROPES.	(E13) LOAD TEST PERFORMED UPON ASSEMBLY OF CRANE TO 125% OF THE CALCULATED ORBITER WEIGHT. WALK AROUND INSPECTION PERFORMED PRIOR TO LIFT TO VERIFY CABLES ARE NOT TWISTED, KINKED, DAMAGED OR OUT OF SHEAVES PER OMI Q3506. PRE-OPERATIONAL MAINTENANCE CHECKLIST PERFORMED PER OMI Q3205. VERIFICATION OF PERIODIC MAINTENANCE AND INSPECTION PROVIDED BY THE MANUFACTURER.
(G8) TWO-BLOCKING	(G9) MOTION FAILS TO STOP WHEN COMMANDED	(G5) FAILURE OF WIRE ROPE	DEVELOPED UNDER HAZARDOUS CONDITION (G9).	DEVELOPED UNDER HAZARDOUS CONDITION (G9).
	OR (E4) OPERATOR ERROR		(E4) NSS/GO 1740.9B, 305(a), ONLY CERTIFIED AND TRAINED OPERATORS SHALL USE/OPERATE MOBILE CRANES; (b), LEVELS OF OPERATOR TRAINING; 306, OPERATION REQUIREMENTS FOR MOBILE CRANES.	(E4) PRE-TEST BRIEFING REQUIRED PRIOR TO OPERATIONS. CRITICAL SKILLS (CSR-343, 437) VERIFIED PRIOR TO LIFT. OPERATORS AND OBSERVERS ARE REQUIRED TO STOP HOIST MOVEMENT SHOULD ANOMALY OCCUR. EMERGENCY INSTRUCTIONS PROVIDED PER OMI S5044.

Table 15 (Page 4 of 7). **HAZARD ANALYSIS WORKSHEETS**

Phase/Mode Function THE LINK BELT 250-TON TRUCK CRANE HC-268

Task/Operation or Facility CONTINGENCY LANDING SITES

Date AUGUST 1993

Prepared by J. MULBERRY, LSOC 52-11

HAZARDOUS CONDITION	HAZARD CAUSE	HAZARD EFFECT	SAFETY/ENGINEERING REQUIREMENTS	HAZARD ELIMINATION/CONTROL PROVISIONS
(G9) MOTION FAILS TO STOP WHEN COMMANDED	(E17) FAILURE OF HOIST CONTROLS AND	(G8) TWO-BLOCKING	(E17) NSS/GO 1740.9B, 302(c), OPERATIONAL TEST REQUIRED; 303, INSPECTION REQUIREMENTS FOR MOBILE CRANES; 304, MAINTENANCE REQUIREMENTS FOR MOBILE CRANES.	(E17) PRE-OPERATIONS CHECK OF HYDRAULIC SYSTEMS AND CONTROLS PERFORMED PER OMI Q3205.
	(E18) OPERATOR ERROR		(E18) NSS/GO 1740.9B, 305(a), ONLY CERTIFIED AND TRAINED OPERATORS SHALL BE AUTHORIZED TO USE/OPERATE MOBILE CRANES; 306(a)(1), OPERATING PROCEDURES DESCRIBING OPERATION, EMERGENCY STEPS, ETC., SHALL BE FOLLOWED. EMERGENCY PROCEDURES SHALL BE DEVELOPED.	(E18) PRE-TEST BRIEFING REQUIRED PRIOR TO OPERATIONS. CRITICAL SKILLS (CSR-343, 437) VERIFIED PRIOR TO LIFT. OPERATORS AND OBSERVERS ARE REQUIRED TO STOP HOIST MOVEMENT SHOULD AN ANOMALY OCCUR. EMERGENCY PROCEDURES PROVIDED PER OMI S5044 AND Q3506.
(G6) LOAD OVER-TRAVEL (VERTICAL)	(G9) MOTION FAILS TO STOP WHEN COMMANDED OR	(G1) FAILURE OF MAIN HOIST SYSTEM	DEVELOPED UNDER HAZARDOUS CONDITION (G9).	DEVELOPED UNDER HAZARDOUS CONDITION (G9).
	(E4) OPERATOR ERROR		(E4) NSS/GO 1740.9B, 305(a), ONLY CERTIFIED AND TRAINED OPERATORS SHALL BE AUTHORIZED TO USE/OPERATE MOBILE CRANES; (b), LEVELS OF OPERATOR TRAINING; 306, OPERATION REQUIREMENTS FOR MOBILE CRANES.	(E4) PRE-TEST BRIEFING REQUIRED PRIOR TO OPERATIONS. CRITICAL SKILLS (CSR-343, 437) VERIFIED PRIOR TO LIFT. OPERATORS AND OBSERVERS ARE REQUIRED TO STOP HOIST MOVEMENT SHOULD AN ANOMALY OCCUR. EMERGENCY PROCEDURES PROVIDED PER OMI S5044 AND Q3506.
(G2) FAILURE OF BOOM HOIST SYSTEM	(G7) FAILURE OF BOOM HOIST BRAKING SYSTEM OR	(GO) PERSONNEL INJURY/LOSS OF LIFE AND/OR FLIGHT HARDWARE DAMAGE/LOSS	DEVELOPED UNDER HAZARDOUS CONDITION (G7).	DEVELOPED UNDER HAZARDOUS CONDITION (G7).

Table 15 (Page 5 of 7). **HAZARD ANALYSIS WORKSHEETS**

Phase/Mode Function THE LINK BELT 250-TON TRUCK CRANE HC-268

Task/Operation or Facility CONTINGENCY LANDING SITES

Date AUGUST 1993

Prepared by J. MULBERRY, LSOC 52-11

HAZARDOUS CONDITION	HAZARD CAUSE	HAZARD EFFECT	SAFETY/ENGINEERING REQUIREMENTS	HAZARD ELIMINATION/CONTROL PROVISIONS
	(E6) FAILURE OF HOIST GEARS	(GO) PERSONNEL INJURY/LOSS OF LIFE AND/OR FLIGHT HARDWARE DAMAGE/LOSS (CONTINUED)	(E6) NSS/GO 1740.9B, 301(f)(3), GEARING SHALL BE DESIGNED AND MANUFACTURED TO COMPLY WITH THE LATEST AGMA STANDARDS; 302, PROOF LOAD TEST, RATED LOAD TEST AND OPERATIONAL TEST REQUIRED; 303, INSPECTION REQUIREMENTS FOR MOBILE CRANES.	(E6) PROOF LOAD TEST PERFORMED UPON ASSEMBLY OF CRANE TO 125% OF CALCULATED ORBITER WEIGHT PER OMI Q3506. PRE-OPERATIONS MAINTENANCE CHECKLIST PERFORMED PER OMI Q3205. VERIFICATION OF PREVENTIVE MAINTENANCE PROVIDED BY THE MANUFACTURER.
	OR			
	(E7) STRUCTURAL FAILURE OF PASSIVE COMPONENTS		(E7) NSS/GO 1740.9B, 301(e), STRUCTURAL DESIGN SHALL BE IN ACCORDANCE WITH INDUSTRY STANDARDS FOR MATERIAL SELECTION, WELDING, ALLOWABLE STRESS, DESIGN LIMITATIONS, FRAMING, WHEELS AND OTHER STRUCTURAL ELEMENTS; 302, PROOF LOAD TESTS, RATED LOAD TESTS AND OPERATIONAL TESTS FOR MOBILE CRANES; 303, PERIODIC INSPECTION REQUIREMENTS; 304, PERIODIC MAINTENANCE REQUIREMENTS.	(E7) LOAD TEST PERFORMED UPON ASSEMBLY OF CRANE TO 125% OF THE CALCULATED ORBITER WEIGHT. WALK-AROUND INSPECTION OF MOBILE CRANE TO VERIFY NO VISUAL PROBLEMS EXIST WITH THE EQUIPMENT WHICH WOULD PRECLUDE SATISFACTORY OPERATION OF THE MOBILE CRANE PER OMI Q3506. PRE-OPERATION MAINTENANCE CHECKLIST PERFORMED PER OMI Q3205. VERIFICATION OF PERIODIC MAINTENANCE AND INSPECTION PROVIDED BY THE MANUFACTURER.
	OR			
	(E4) OPERATOR ERROR		(E4) NSS/GO 1740.9B, 305(a), ONLY CERTIFIED AND TRAINED OPERATORS SHALL BE AUTHORIZED TO USE/OPERATE MOBILE CRANES; (b), LEVELS OF OPERATOR TRAINING; 306, OPERATION REQUIREMENTS FOR MOBILE CRANES.	(E4) PRE-TEST BRIEFING PERFORMED PRIOR TO OPERATIONS. CRITICAL SKILLS (CSR-343, 437) VERIFIED PRIOR TO LIFT. OPERATORS AND OBSERVERS ARE REQUIRED TO STOP HOIST MOTION SHOULD ANOMALY OCCUR.EMERGENCY PROCEDURES PROVIDED PER OMI S5944 AND Q3506.

Table 15 (Page 6 of 7). **HAZARD ANALYSIS WORKSHEETS**

Phase/Mode Function THE LINK BELT 250-TON TRUCK CRANE HC-268

Task/Operation or Facility CONTINGENCY LANDING SITES

Date AUGUST 1993

Prepared by J. MULBERRY, LSOC 52-11

HAZARDOUS CONDITION	HAZARD CAUSE	HAZARD EFFECT	SAFETY/ENGINEERING REQUIREMENTS	HAZARD ELIMINATION/CONTROL PROVISIONS
(G7) FAILURE OF HOIST BRAKING SYSTEM	(E14) FAILURE OF HOIST DISK BRAKE AND (E15) FAILURE OF REDUNDANT HOIST DISC BRAKE AND (E16) FAILURE OF HOIST MOTOR BRAKE	(G2) FAILURE OF BOOM HOIST SYSTEM	(E14)(E15)(E16) NSS/GO 1740.9B, 301(f)(8), FOR CRITICAL CRANES, TWO MEANS OF BRAKING SHALL BE PROVIDED, EACH CAPABLE OF BRINGING A RATED LOAD TO ZERO SPEED AND HOLDING IT; 302(c)(6), OPERATIONAL TEST OF HOIST BRAKES REQUIRED.	(E14)(E15)(E16) LOAD TEST PERFORMED UPON ASSEMBLY OF CRANE TO 125% OF THE CALCULATED ORBITER WEIGHT. PRE-OPERATIONAL MAINTENANCE INSPECTION CHECKLIST PERFORMED PER OMI Q3205. VERIFICATION OF PERIODIC MAINTENANCE AND INSPECTION PROVIDED BY THE MANUFACTURER. MULTIPLE (3) FAILURES REQUIRED.
(G3) LOSS OF CRANE BALANCE	(E8) CRANE OVER-LOAD CONDI-TION OR (E9) FAILURE OF OUTRIGGERS OR	(G0) PERSONNEL INJURY/LOSS OF LIFE AND/OR DAMAGE/LOSS OF GSE FHW	(E8) NSS/GO 1740.9B, 306(4), FOR CRITICAL LIFTS, THE LOAD SHALL NOT EXCEED 75% OF THE CRANE'S RATED CAPACITY FOR THE RESPECTIVE RADIUS; (6), A CRANE SHALL NOT BE LOADED BEYOND ITS RATED LOAD CAPACITY. (E9) NSS/GO 1740.9B, 306(a)(29), MOBILE CRANES SHALL BE LEVEL, AND, WHERE NECESSARY, OUTRIGGERS SHALL BE EXTENDED AND/OR THE CRANE SHALL BE BLOCKED PROP-ERLY BEFORE THE LOAD IS MOVED.	(E8) CHECKLIST FOR CRITICAL LIFTS DETERMINES ALLOWABLE LOAD PER OMI Q3205. DETERMINATION OF BOOM DEFLECTION AND SIDE LOADING PER OMI Q3506. (E9) OUTRIGGERS VERIFIED FULLY EXTENDED AND BLOCKED TO WITHIN 1/8 INCH OF OUTRIGGER PER OMI Q3505. PRE-OPERATIONAL CHECKLIST FOR CRITICAL LIFTS PER-FORMED PER OMI Q3205. REFERENCE HAZARD REPORT SAA05MH43-003 HO1.

Table 15 (Page 7 of 7). **HAZARD ANALYSIS WORKSHEETS**

Phase/Mode Function THE LINK BELT 250-TON TRUCK CRANE HC-268

Task/Operation or Facility CONTINGENCY LANDING SITES

Date AUGUST 1993

Prepared by J. MULBERRY, LSOC 52-11

HAZARDOUS CONDITION	HAZARD CAUSE	HAZARD EFFECT	SAFETY/ENGINEERING REQUIREMENTS	HAZARD ELIMINATION/CONTROL PROVISIONS
(G3) LOSS OF CRANE BALANCE (CONTINUED)	(E10) OPERATIONS PERFORMED DURING EXCESSIVE WINDS	(G0) PERSONNEL INJURY/LOSS OF LIFE AND/OR DAMAGE/LOSS OF GSE FHW (CONTINUED)	(E10) NSS/GO 1740.9B, 306(a)(47), OUTDOOR HOISTING OPERATIONS SHOULD NOT COMMENCE IF WINDS ARE ABOVE 20 KNOTS STEADY STATE OR IF GUSTS EXCEED 35 KNOTS. OMRSD V00AB0.030 MAXIMUM WIND VELOCITIES FOR HOISTING OPERATIONS.	(E10) VERIFICATION OF WIND CONDITIONS PERFORMED PRIOR TO LIFTING OPERATIONS PER OMI S5044. WIND RESTRICTIONS PROVIDED INCLUDING WIND DIRECTION, MAXIMUM STEADY STATE AND MAXIMUM GUSTS PER APPENDIX 1, OMI S5044. CONTINGENCY INSTRUCTIONS FOR HIGH WIND CONDITIONS PROVIDED PER OMI S5044. REFERENCE HAZARD REPORT SAA05MH433-003 HO2.

8.0 LPS CONTROL/MONITOR FUNCTIONS REVIEW

8.1 APPLICATION SET CONTROL LOGIC REVIEW

There were no concerns identified in the Software Application set for this system.

8.1.1 Prerequisite Control Logic Review. There is no Prerequisite Control Logic associated with the critical functions assessed in section 4.0 for this system; therefore, no Prerequisite Control Logic Review is required.

8.1.2 Reactive Control Logic Review. There is no Reactive Control Logic associated with the critical functions assessed in section 4.0 for this system; therefore, no Reactive Control Logic Review is required.

8.2 LAUNCH COMMIT CRITERIA AND GROUND LAUNCH SEQUENCER REVIEW

There are no Launch Commit Criteria requirements for this system; therefore, no Launch Commit Criteria Review is required.

8.3 LPS/CCMS CONTROL FUNCTION ANALYSIS

The LPS/CCMS does not provide any control and monitor functions for the critical functions assessed in section 4.0 for this system; therefore, no LPS/CCMS Control Function Analysis is required.

9.0 END-TO-END ANALYSIS

This system interfaces with and requires the support of the systems depicted in Figure 16, End-to-End Block Diagram. An assessment of the loss of each interfacing system follows.

Table 16. **Interfacing System Loss Assessment**

Interfacing System Title	Effect of Loss	SAA Number	Concurrence in Other SAA Comments
55-Ton Hydra-set (H72-0828-02)	Loss (damage) to a vehicle system	SAA09FT01-011/A	Yes
Orbiter Ferry Sling (H70-0743)	Loss of orbiter and/or SCA	SAR 294-400-85-176	Yes
Aft Spreader Bar Adapter (H70-0790)	Loss of orbiter and/or SCA	SAR 294-400-85-100	Yes

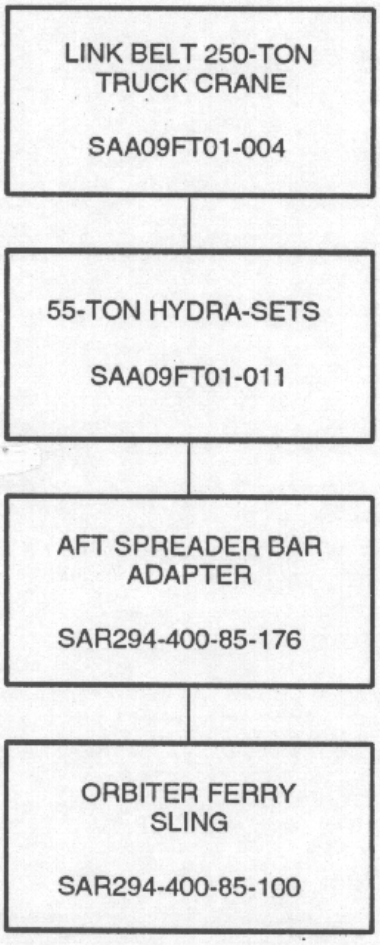

FIGURE 11. END-TO-END BLOCK DIAGRAM OF THE
250-TON LINK-BELT TRUCK CRANE

10.0 SNEAK CIRCUIT ANALYSIS

There was no Sneak Circuit Analysis performed on this system.

11.0 EMERGENCY SAFING ANALYSIS

There are no Emergency Safing Circuits associated with this system.

12.0 CRITICALITY CATEGORY 1R ANALYSIS

Improper performance of this system could result in loss of life or vehicle; therefore, the components in the critical functions are analyzed in the following reliability block diagram.

12.1 RELIABILITY BLOCK DIAGRAM

The components of this system are described in the following reliability block diagram. The reliability block diagram depicts the logical relationship of system components in series and parallel paths that lead to the desired event. Those items identified as criticality category 1R are summarized in section 12.2.

Module : LINK
Description : <Gate not found>

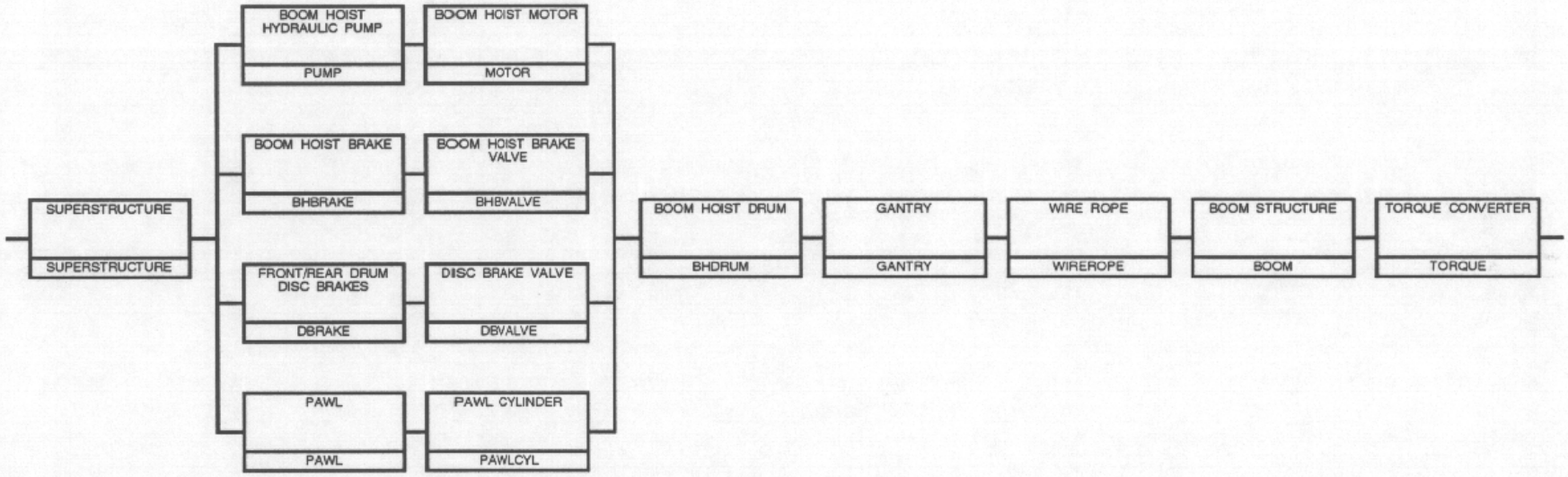

Figure 12. Reliability Block Diagram, Upper Works

SAA09FT01-004
REV. A

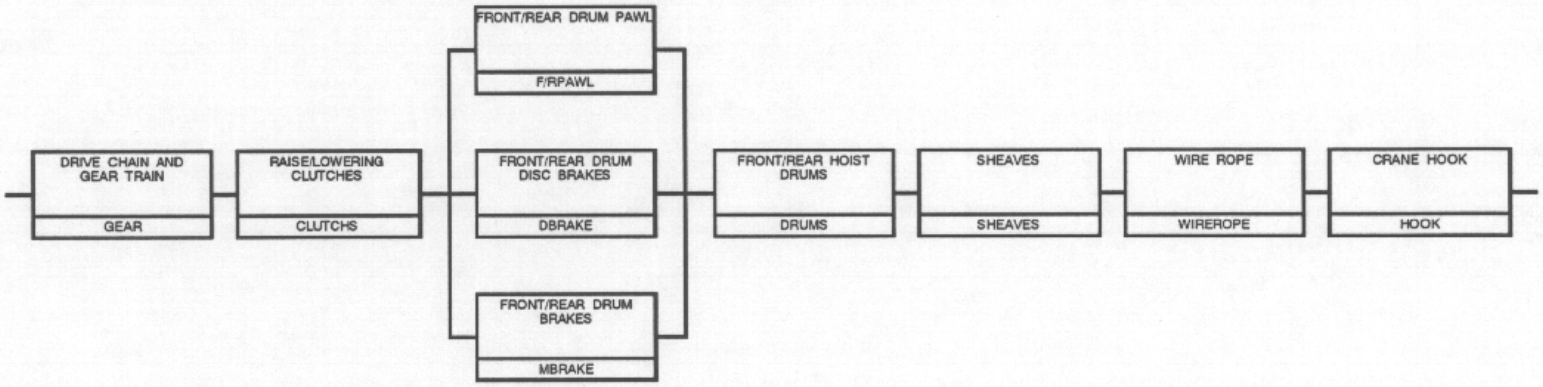

Figure 13. Reliability Block Diagram, Upper Works (Continued)

Module : LINKORIG
Description : <Gate not found>

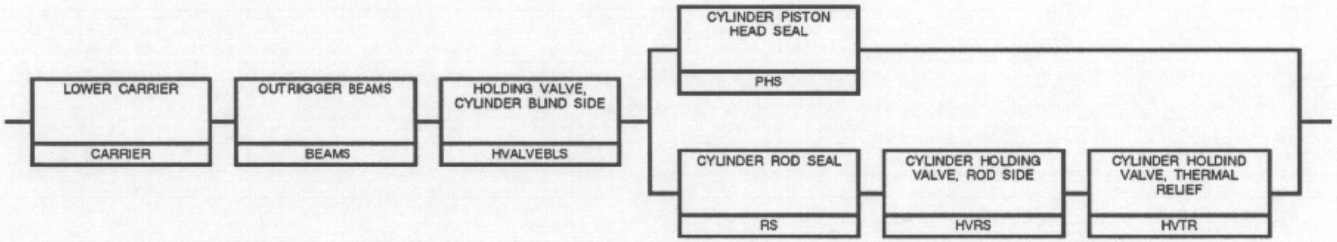

Figure 14. Reliability Block Diagram, Lower Carrier

12.2 CRITICALITY CATEGORY 1R ITEMS

There were ten criticality category 1R items identified in section 12.1 for this system. The 1R items are summarized on the following Criticality Category 1R Items Summary Sheets (Worksheet 5122-014).

Table 17 (Page 1 of 2). **CRITICALITY CATEGORY 1R ITEMS SUMMARY**

System LINK BELT 250-TON TRUCK CRANE
Baseline 330.00

Program SPACE SHUTTLE

Station Set/Facility Code 99
Date AUGUST 1993
Prepared By B. KALLE, LSOC 52-11

FIND NO. NASA PART NO. MFG NAME MFG PART NO.	PART NAME PROGRAM MODEL NO. DRAWING/SHEET NO.	a. FAILURE MODE b. CAUSE c. FMN	FAILURE EFFECT ON SYSTEM PERFORMANCE/VEHICLE SYSTEMS AND/OR PERSONNEL SAFETY	REDUNDANCY SCREENS PASS	REDUNDANCY SCREENS FAIL	CONFORMS TO JSCM 8080	OMRS FILE VI VOLUME I TEST AND INSPECTION REQUIREMENT(S)	TEAR DOWN ANALYSIS REQUIRED
1-46-31.0/ 5 NONE FMC 36J3151	BUMPER JACK CYLINDER H72-1390 28A3314-D/1	a. PISTON HEAD SEAL FAILURE (INTERNAL LEAKAGE) b. WORN, CUT SEAL c. 09FT01-004.001	MOVEMENT OF CYLINDER ROD REQUIRES DISPLACEMENT OF FLUID FROM CYLINDER WHICH IS BLOCKED BY THE LOCK VALVE OR THE ROD SEAL. CYLINDER WILL SLOWLY EXTEND IF FAILURE OCCURS WITH JACK IN STOWED POSITION. SUBSEQUENT FAILURE OF THE ROD SEAL OR PREMATURE THERMAL RELIEF COULD RESULT IN LOSS OF LIFE AND/OR VEHICLE.	A C	B	NA	REQUIRES VERIFICATION OF RATED LOAD TEST ANNUALLY.	NO
		a. ROD SEAL FAILURE (EXTERNAL LEAKAGE) b. WORN, CUT SEAL c. 09FT01-004.002	NO EFFECT. CYLINDER BLIND SIDE LOCK VALVE AND/OR PISTON HEAD SEAL WILL SUPPORT THE LOAD. CYLINDER WILL SLOWLY EXTEND IF FAILURE OCCURS WITH JACK IN STOWED POSITION. SUBSEQUENT FAILURE OF THE PISTON HEAD SEAL COULD RESULT IN LOSS OF LIFE AND/OR VEHICLE.	A C	B	NA	REQUIRES VERIFICATION OF RATED LOAD TEST ANNUALLY.	NO
1-46-30.0/ 6 NONE FMC 18J1459	FRONT BUMPER JACK LOCK VALVE H72-1390 28A3314-D/1	a. FAILS OPEN (ROD SIDE) b. SPRING FAILURE, CONTAMINATION c. 09FT01-004.003	NO EFFECT. CYLINDER BLIND SIDE LOCK VALVE AND/OR PISTON HEAD SEAL WILL SUPPORT THE LOAD. CYLINDER WILL SLOWLY EXTEND IF FAILURE OCCURS WITH JACK IN STOWED POSITION. SUBSEQUENT FAILURE OF THE PISTON HEAD SEAL COULD RESULT IN LOSS OF LIFE AND/OR VEHICLE.	A C	B	NA	REQUIRES VERIFICATION OF RATED LOAD TEST ANNUALLY.	NO
		a. RELIEVES PREMATURLY b. WEAK SPRING, MISCALIBRATION c. 09FT01-004.004	NO EFFECT. CYLINDER BLIND SIDE LOCK VALVE AND/OR PISTON HEAD SEAL WILL SUPPORT THE LOAD. CYLINDER WILL SLOWLY EXTEND IF FAILURE OCCURS WITH JACK IN STOWED POSITION. SUBSEQUENT FAILURE OF THE PISTON HEAD SEAL COULD RESULT IN LOSS OF LIFE AND/OR VEHICLE.	A C	B	NA	REQUIRES VERIFICATION OF RATED LOAD TEST ANNUALLY.	NO
1-44-14.0/ 15, 16, 17, 18 NONE FMC 43J0381	LOCK VALVE (4/SYS) H72-1390 28A3314-D/1	a. FAILS OPEN (ROD SIDE) b. SPRING FAILURE, CONTAMINATION c. 09FT01-004.005	NO EFFECT. CYLINDER BLIND SIDE LOCK VALVE AND/OR PISTON HEAD SEAL WILL SUPPORT THE LOAD. CYLINDER WILL SLOWLY EXTEND IF FAILURE OCCURS WITH JACK IN STOWED POSITION. SUBSEQUENT FAILURE OF THE PISTON HEAD SEAL COULD RESULT IN LOSS OF LIFE AND/OR VEHICLE.	A C	B	NA	REQUIRES VERIFICATION OF RATED LOAD TEST ANNUALLY.	NO

Table 17 (Page 2 of 2). **CRITICALITY CATEGORY 1R ITEMS SUMMARY**

System LINK BELT 250-TON TRUCK CRANE
Baseline 330.00

Program SPACE SHUTTLE

Station Set/Facility Code 99
Date AUGUST 1993
Prepared By B. KALLE, LSOC 52-11

FIND NO. NASA PART NO. MFG NAME MFG PART NO.	PART NAME PROGRAM MODEL NO. DRAWING/SHEET NO.	a. FAILURE MODE b. CAUSE c. FMN	FAILURE EFFECT ON SYSTEM PERFORMANCE/VEHICLE SYSTEMS AND/OR PERSONNEL SAFETY	REDUNDANCY SCREENS PASS - FAIL		CONFORMS TO JSCM 8080	OMRS FILE VI VOLUME I TEST AND INSPECTION REQUIREMENT(S)	TEAR DOWN ANALYSIS REQUIRED
		a. RELIEVES PREMATURLY b. WEAK SPRING, MIS-CALIBRATION c. 09FT01-004.006	NO EFFECT. CYLINDER BLIND SIDE LOCK VALVE AND/OR PISTON HEAD SEAL WILL SUPPORT THE LOAD. CYLINDER WILL SLOWLY EXTEND IF FAILURE OCCURS WITH JACK IN STOWED POSITION. SUBSEQUENT FAILURE OF THE PISTON HEAD SEAL COULD RESULT IN LOSS OF LIFE AND/OR VEHICLE.	A C	B	NA	REQUIRES VERIFICATION OF RATED LOAD TEST ANNUALLY.	NO
1-46-26.0/ 20, 21, 22, 23 NONE FMC 28J2300	OUTRIGGER JACK CYLINDER ASSY. (4/SYS) H72-1390 28A3314-D/1	a. PISTON HEAD SEAL FAILURE (INTERNAL LEAKAGE) b. WORN, CUT SEAL c. 09FT01-004.007	MOVEMENT OF CYLINDER ROD REQUIRES DISPLACEMENT OF FLUID FROM CYLINDER WHICH IS BLOCKED BY THE LOCK VALVE OR THE ROD SEAL. CYLINDER WILL SLOWLY EXTEND IF FAILURE OCCURS WITH JACK IN STOWED POSITION. SUBSEQUENT FAILURE OF THE ROD SEAL OR PREMATURE THERMAL RELIEF COULD RESULT IN LOSS OF LIFE AND/OR VEHICLE.	A C	B	NA	REQUIRES VERIFICATION OF RATED LOAD TEST ANNUALLY.	NO
		a. ROD SEAL FAILURE (EXTERNAL LEAKAGE) b. WORN, CUT SEAL c. 09FT01-004.008	NO EFFECT. CYLINDER BLIND SIDE LOCK VALVE AND/OR PISTON HEAD SEAL WILL SUPPORT THE LOAD. CYLINDER WILL SLOWLY EXTEND IF FAILURE OCCURS WITH JACK IN STOWED POSITION. SUBSEQUENT FAILURE OF THE PISTON HEAD SEAL COULD RESULT IN LOSS OF LIFE AND/OR VEHICLE.	A C	B	NA	REQUIRES VERIFICATION OF RATED LOAD TEST ANNUALLY.	NO

13.0 AREAS OF CONCERN

There were no Areas of Concern identified during this analysis.