Doc Number: SAA00210
Revision: A
Version: 2.0

# Electronic Signature Approval

SAA OF THE 75 TON LINK BELT MOBILE CRANE AT KSC

Release Date: nulldate
DRA Combo:
Object ID: 090024e186de0942

| Role: | Signed by: | Date (GMT):<br>Reason for signing: |
|---|---|---|
| **SE Concurrence** | Majid Wally A<br>United Space Alliance LLC 56840<br>Mail:USK-353 Phone:321/861-5593<br>Documentum User Name :<br>majidwa | 11/21/2008 18:23:07<br>Document has been Approved |
| **NASA System Engineer** | Blake James D<br>Nasa Ksc<br>Mail: Phone:<br>Documentum User Name :<br>Blake James D | 11/24/2008 12:28:27<br>Document has been Approved |
| **FLM Approval** | Doherty Michael A<br>United Space Alliance LLC 15270<br>Mail:USK-877 Phone:321/867-7754<br>Documentum User Name :<br>Doherty Michael A | 11/24/2008 13:30:49<br>Document has been Approved |
| **NASA Concurrence** | Gelino Nathan J<br>Nasa Ksc<br>Mail: Phone:<br>Documentum User Name :<br>Gelino Nathan J | 11/24/2008 14:28:33<br>Document has been Approved |
| **Reliability Engineering** | Rhodes David M<br>United Space Alliance LLC 15274<br>Mail:USK-291 Phone:321/861-1811<br>Documentum User Name :<br>Rhodes David M | 12/01/2008 13:30:55<br>Document has been Approved |
| **SDE Concurrence** | Dowling Carner W<br>United Space Alliance LLC 15145<br>Mail:USK-751 Phone:321/861-9402<br>Documentum User Name :<br>dowlincw | 12/02/2008 13:35:18<br>Document has been Approved |

SAA00210
REV. A
NOVEMBER 2008

# SYSTEM ASSURANCE ANALYSIS

# OF THE

# 75 TON LINK BELT

# MOBILE CRANE

**AT KSC**

BASELINE NO.: 330.00 PMN: K60-3188

United Space Alliance

*GROUND OPERATIONS*

Revision Log

| Rev. | Description | Date |
|---|---|---|
| New | Basic issue in support of PMN assignment and purchase of new crane. | 1/22/08 |
| A | Revised SAA to incorporate new findings. Added critical items FMN00210.003 and 00210.004.<br><br>Pages Affected 1, 5, 6, 10, 24, 32, 36 and B-1. | 11/04/08 |

**Prepared By:** See Electronic Signature Sheet
David Rhodes, USA
Reliability Engineer

**Technical Concurrence:** See Electronic Signature Sheet
Eric Dowling, USA
System Design Engineer

**Technical Concurrence:** See Electronic Signature Sheet
Wally Majid, USA
Systems Engineer

**Process Concurrence:** See Electronic Signature Sheet
Nathan Gelino, NASA
Safety Engineering & Assurance

**Technical Concurrence:** See Electronic Signature Sheet
James Blake, NASA
Systems Engineer

**Approval:** See Electronic Signature Sheet
Mike Doherty, USA
Manager, Reliability Engineering

**See the Electronic Signature Page for Digital Release Approval**

# TABLE OF CONTENTS

**1 SYSTEM ASSURANCE ANALYSIS SUMMARY ..... 6**
1.1 FINDINGS SUMMARY ..... 6
1.2 AREAS OF CONCERN ..... 6
1.3 DOCUMENTATION LIST ..... 6

**2 SYSTEM DESCRIPTION ..... 7**
2.1 General ..... 7
2.2 Boom and Hoist System ..... 8
2.3 Crane Monitoring Systems ..... 8
2.4 Swing System ..... 9
2.5 Winch Assembly ..... 9
2.6 Outriggers ..... 10
2.7 Hydraulic Systems ..... 10

**3 ANALYSIS GROUNDRULES ..... 10**

**4 FAILURE MODES AND EFFECTS ANALYSIS ..... 10**
4.1 CRITICALITY ASSESSMENT AND END-TO-END ANALYSIS ..... 10
4.2 FMEA WORKSHEETS ..... 13
4.2.1 Passive Components ..... 13
4.2.2 Wire Harnesses, Cables and Connectors ..... 13
4.3 COMPUTER INTERFACE ANALYSIS ..... 34

**5 HAZARD ANALYSIS ..... 34**

**Appendix A. DEFINITIONS**
A.1 FMEA CRITICALITY CATEGORIES
A.2 HAZARD ANALYSIS DATA ELEMENTS
A.3 DEFINITIONS
A.4 FAULT TREE SYMBOLS
**Appendix B. FAULT TREE ANALYSIS**
**Appendix C. CRITICAL ITEMS LIST**

# LIST OF ILLUSTRATIONS

Figure 1. 75 Ton Mobile Hydraulic Crane Side Dimensional ..... 7
Figure 2. 75 Ton Mobile Hydraulic Crane Front Dimensional ..... 8
Figure 3. 75 Ton Mobile Hydraulic Crane Function Block Diagram ..... 11

# LIST OF TABLES

Table 1. Criticality Assessment Worksheet – K60-3188 ..... 12
Table 2. Passive Component List ..... 13
Table 3. FMEA – Hoist System ..... 14
Table 4. FMEA - Mechanical ..... 17
Table 5. FMEA - Carrier System ..... 18
Table 6. FMEA - Swing System ..... 19
Table 7. FMEA – Mechanical Boom System ..... 22
Table 8. FMEA – Mechanical Outrigger Section ..... 25
Table 9. FMEA –Electrical System ..... 28

Table 10. Flexhose FMEA ..... 30
Table 11. Filter FMEA..... 33
Table 12. Hazard Analysis Worksheet – K60-3188 ..... 35

# ACRONYMS

| | |
|---|---|
| APU | Auxiliary Power Unit |
| CALC | Confine Area Lifting Capacities |
| CIL | Critical Items List |
| EO | Engineering Order |
| FD | Function Designator |
| FMEA | Failure Modes and Effects Analysis |
| FMN | Failure Mode Number |
| INCS | Integrated Network Control System |
| KCCS | Kennedy Complex Control System |
| KSC | Kennedy Space Center |
| LMI | Load Moment Indicator |
| LPS | Launch Processing System |
| NC | Non-Critical |
| PMN | Program Model Number |
| SAA | System Assurance Analysis |
| USA | United Space Alliance |

# 1 SYSTEM ASSURANCE ANALYSIS SUMMARY

The 75 Ton Mobile Hydraulic Crane is assessed as Reliability Critical because failure of the system to support the load could cause a sudden drop of the load resulting in loss of life/vehicle and/or loss (damage) of a vehicle system.

The system is assessed as Safety Critical because it contains:

- Hydraulics and pneumatics.
- Hoisting equipment.

## 1.1 FINDINGS SUMMARY

| | Category | Quantity |
|---|---|---|
| Critical Items | 1 | 1 |
| | 1S | - |
| | 2 | 1 |
| 1R Non-CIL Items | 1R | 2 |
| Critical Flexhoses | 1S | - |
| | 2 | - |
| Critical Orifices | 1S | - |
| | 2 | - |
| Critical Filters | 1S | - |
| | 2 | - |
| Hazard Reports | Accepted Risk | - |
| | Controlled | 2 |

## 1.2 AREAS OF CONCERN

There were no Areas of Concern identified with this system.

## 1.3 DOCUMENTATION LIST

| Document/Drawing No. | Rev | Outstanding EO/Change Number(s) | Title |
|---|---|---|---|
| NASA-STD-8719.9 | - | - | Standard for Lifting Devices and Equipment |
| NSTS 22206 | D | 22-39 | Requirements for Preparation and Approval of Failure Modes and Effects Analysis (FMEA) and Critical Items List (CIL) |
| NSTS 22254 | B | 5-18 | Methodology for Conduct of Space Shuttle Program Hazard Analyses |
| VEN-5430 | - | - | Operator's Manual |
| VEN-5431 | - | - | Schematic, Air Control, Model F2 Hydraulic Schematic, Electric Schematic |
| VEN-5470 | - | - | Part's List |

# 2 SYSTEM DESCRIPTION

## 2.1 General

The Link-Belt 75 ton mobile hydraulic Model HTC-8675LB is commercial-off-the-shelf equipment is used to lift flight hardware and the APU carts at the pad.

The 75 Ton crane consists of the following major systems, which include:

- Boom / Hoist and Winch for raising and lowering load
- A crane control monitoring system
- Swing system for 360 degree rotation of the cab and boom
- Outrigger system to provide balanced and stable lifting platform
- A drive system for crane travel to and from lifting sites. The drive system includes a six-cylinder diesel engine that provides power to all systems.
- 169 Gallon hydraulic reservoir

All hoist motors, boom extend cylinders, and boom hoist cylinders are equipped with counterbalance valves to provide load lowering and to prevent accidental load drop if hydraulic power is suddenly reduced.

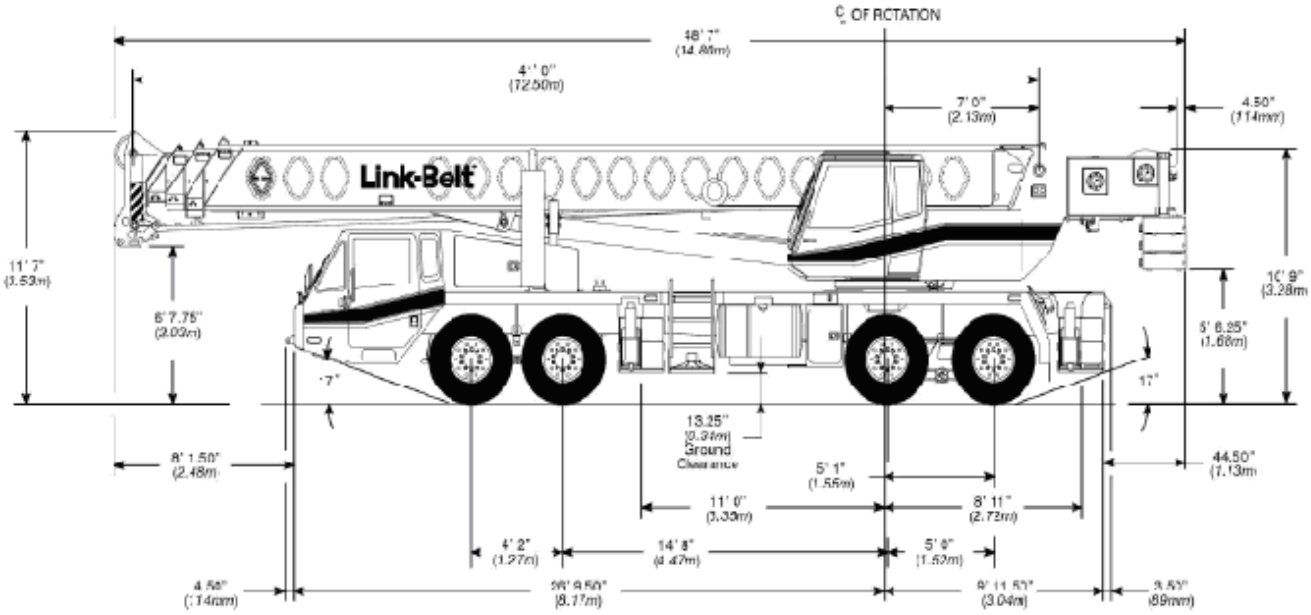


Figure 1. 75 Ton Mobile Hydraulic Crane Side Dimensional

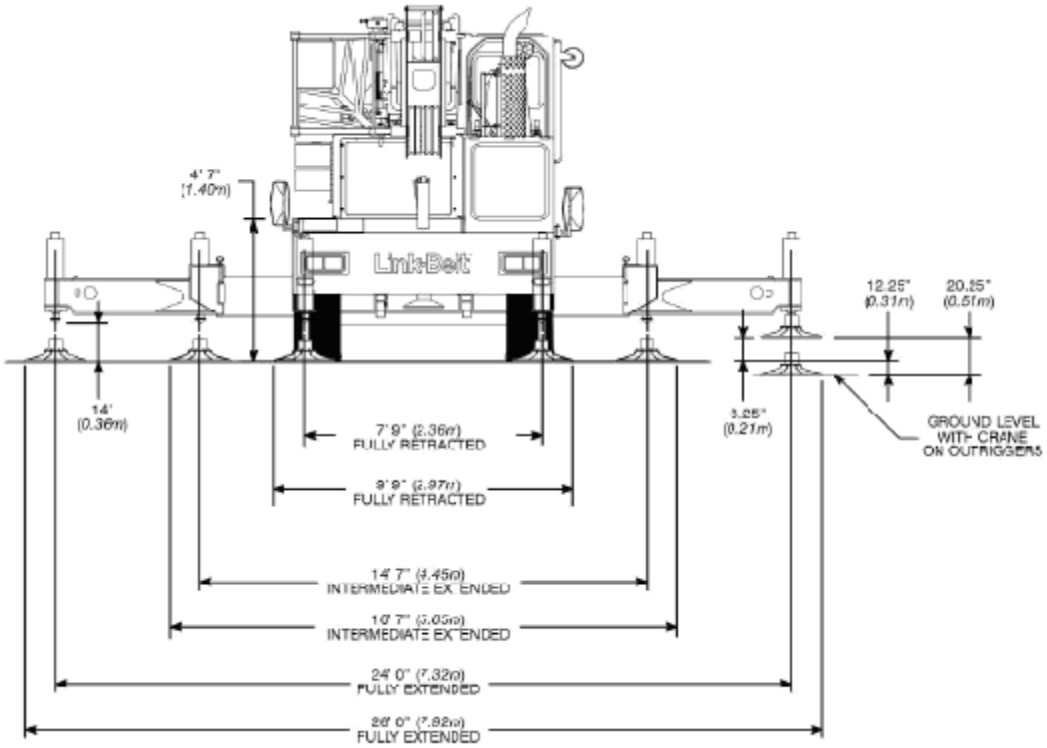


Figure 2. 75 Ton Mobile Hydraulic Crane Front Dimensional

## 2.2 Boom and Hoist System

The telescoping feature, of the boom sections, is operated using hydraulic cylinders and a cable/sheave mechanism, which are an integral part of the boom assembly. The boom has four sections consisting of one base section and three telescoping sections. The first telescoping section extends independently by means of one double-acting, single stage hydraulic cylinder with integrating holding valves. The second and third telescoping sections extend proportionally by means of one double-acting, single stage cylinder with integrated holding valves and cables. There are two modes of boom extension controlled from the operator's cab: A-Mode and B-Mode. A-Mode provides superior capacities by extending the first telescoping section to 69.6 feet. B-Mode synchronizes all the telescoping sections proportionally to 127 feet. This is controlled from the operator's cab. Maximum extension of the boom (tip height) is 200 ft, which is provided by the Fly Base (which extends 39 feet 6 in. to 172 ft.) the feet Tip Fly (which extends 39 ft. 6 in. to a total tip height of 200 feet).

## 2.3 Crane Monitoring Systems

Integrated into the Rated Capacity Limiter System is an anti-two block warning system. The system is an electromechanical system designed to alert the operator before the hook block or hook ball contacts the head machinery of the main boom, auxiliary lifting sheave, or fly. When a two-block situation is imminent, an audio/visual alarm is activated to alert the operator of the pending danger.

Also part of the Rated Capacity Limiter System is a MicroGuard 434, which is intended to aid the operator in the efficient operation of the crane by continually monitoring the load and warning of an approach to an overload or unsafe condition. The system monitors crane functions by means of high accuracy sensors and continuously compares the load with a copy of the crane capacity chart, which is stored in the computer memory. If an overload is approached, the system warns by means of audible and visual

alarms and is configured to cause function limitation. MicroGuard 434 Rated Capacity Limiter provides the operator with a continuous display of:

- Rated Capacity
- Actual Load
- Percentage of Rated Capacity
- Radius of the load
- Angle of the main boom
- Crane configuration
- Length of the Main Boom

An additional feature of the system is the provision of operator settable alarms. These alarms, when properly set, provide a method of obstacle avoidance. This is achieved by means of minimum and maximum boom angle, maximum boom length, maximum height, left and right swing, and defined area alarms. These alarms can be programmed for each job site and set rapidly for the prevailing site conditions thereby aiding the operator in safe operation of the crane.

## 2.4 Swing System

Rotation of the upper assembly over the carrier is controlled by the swing system. The Swing System is a bi-directional hydraulic swing motor mounted to a planetary reducer for 360°continuous swing at 1.7 rpm. The Swing Park Brake is 360°, electric over hydraulic, (spring applied/hydraulic released) multi-disc brake mounted on the speed reducer operated by a switch from the operator's cab. The Swing Brake is a 360°, foot operated, hydraulic applied disc brake mounted to the speed reducer. The Swing Lock is a two-position swing lock (boom over front or rear) operated from the operator's cab.

## 2.5 Winch Assembly

The load hoist system consists of a main winch with two-speed motor and automatic brake for power to raise and lower the boom. A bidirectional piston type hydraulic motor driven through a planetary reduction unit provides load control. In winch operation the input section of the drive assembly is bolted to the motor end support and cannot rotate. The drive housing is the output member of the gear set and is bolted to the winch drum.

The primary sun gear is directly splined to the hydraulic motor by the inner race of the brake clutch assembly. As the motor turns in the hoisting direction (normally clockwise), the three planetary assemblies reduce the input speed of the motor and rotate the ring gear and winch drum. Since the output reducer planet carrier is held from turning by the bearing support, the drum rotates in the opposite direction of the motor input shaft. In the hoisting direction, the static brake remains fully applied and the input shaft rotates freely through the sprag clutch.

When the motor is stopped, the load tries to rotate the winch gear train in the opposite direction. The sprag clutch on the input shaft immediately locks up, allowing the fully applied static brake to hold the load from dropping.

The shaft located between the drum and brake is splined, which is a method approved by hoisting standards. Bearings on the drums and shafts were analyzed and it was determined that if they failed the load would not drop.

The service brakes on the winch are always set. Movements on winch joystick cause the hydraulic line to pressurize and release the brakes on the winch shaft. The counterbalance valve for the winch motor is used to stop the motor if the pressure drops in the line.

### 2.6 Outriggers

Outriggers are contained in two double boxes, with front and rear welds to the carrier frame. It is designed with four dual stage beams with Confine Area Lifting Capacities (CALC), which provide selected outrigger extensions of full, intermediate and retracted positions. The outriggers (with integral check valves) are hydraulically controlled from the operator's cab and on both sides of the carrier. A fifth front bumper outrigger (with integral check valve) is hydraulically controlled from the operator's cab and at the front bumper of the carrier. The fifth outrigger is powered by the steering gear pump since steering and outrigger operation are not performed simultaneously. There are four aluminum pontoons with a contact area of 453 in². The fifth pontoon is constructed of steel with a contact area of 171 in². The main jack is designed for 97,000 lbs force and 215.5 psi ground bearing pressure. The outriggers are used to lift and stabilize the crane during lifting operations.

### 2.7 Hydraulic Systems

The hydraulic system consists of five fixed displacement gear pumps that operate the main outriggers, main and auxiliary wenches, boom hoist and telescope. It also has one fixed displacement gear pump for steering and the front bumper outrigger and a variable displacement piston pump for the controls circuit. The filtration system consists of a 10-micron filter. All oil is filtered prior to return to reservoir. The crane uses ISO-46 hydraulic fluid.

## 3 ANALYSIS GROUNDRULES

This analysis has been developed in accordance with NSTS 22206 and NSTS 22254.

The following additional groundrules and assumptions were used during this analysis:

a. Equipment is operated by trained and certified personnel.
b. Hoists shall be provided with two means of braking: a holding brake and a control brake. For a telescoping boom crane the use of a counterbalance valve that locks the hydraulic fluid when the control is in the neutral position shall be an acceptable braking means per NASA-STD-8719.9.
c. Due to an orifice in the neutral section of the control valve spool the boom cylinder and boom telescope cylinder will drift slow enough that correcting action can be implemented.
d. The Rated Capacity Limiter and the Settable Alarm will not be used to mitigate a failure.

## 4 FAILURE MODES AND EFFECTS ANALYSIS

### 4.1 CRITICALITY ASSESSMENT AND END-TO-END ANALYSIS

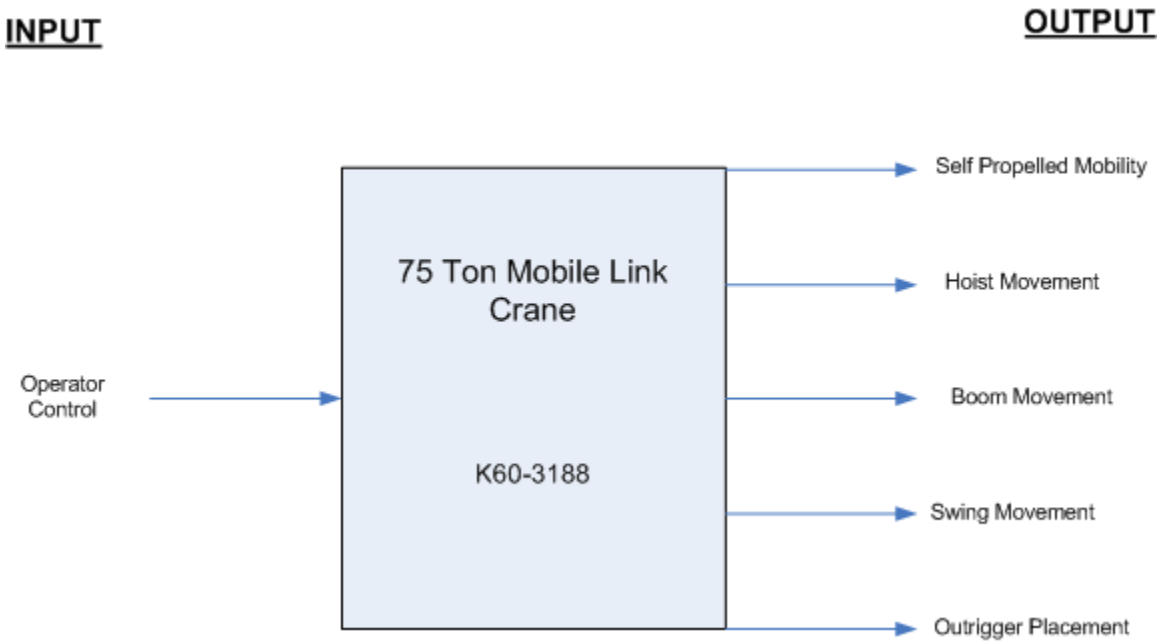


Figure 3. 75 Ton Mobile Hydraulic Crane Function Block Diagram

| **Table 1. Criticality Assessment Worksheet – K60-3188** | | | | | Pages 12 to 12 |
|---|---|---|---|---|---|
| **System / Subsystem:** 75 Ton Mobile Hydraulic Crane<br>**Location:** KSC | | | | | **Baseline Number:** 330.00 |
| **Input / Output** | **Function** | **Time Period** | **Effect of Loss / Failure**<br>If Function Fails to Operate or Cease Operation on Time, Fails During Operation, and/or Prematurely Operates | **Crit / Noncrit** | **Notes** |
| **Input** | | | | | |
| Operator Control | Operator provides the input to the unit to control all movements | As required | Operator error could result in possible contact with flight hardware causing loss (damage) of a vehicle system. | C | See Hazard Analysis |
| **Output** | | | | | |
| Self propelled mobility | Provides means to reach operations site. | As required for support | Failure of cranes self-powered mobility could result in delayed operations. | NC | |
| Hoist movement | Provides ability to raise, lower and hold load. | During Operations | Failure of hoist system during lifting, lowering and or holding operations could result in uncontrolled movement causing loss of life and or damage to flight hardware. | C | See FMEA |
| Boom (telescoping) movement | Provides the ability to extend (raise), hold position and retract (lower) the boom and or load. | During Operations | Failure of the boom to extend (raise), hold position or retract (lower) could result in uncontrolled movement causing injury, loss of life and or damage to flight hardware. | C | See FMEA |
| Swing (lateral) movement | Enables the lift (upper) unit to pivot 360 degrees | During Operations | Failure of the swing to rotate, stop rotation or hold position could result in uncontrolled movement causing loss of life and or damage to flight hardware | C | See FMEA |
| Outrigger placement | Provides a stable and level platform for crane operations. | During Operations | Failure of outrigger(s) to provide stability during hoisting operations could result in uncontrolled movement causing loss of life and or damage to flight hardware. | C | See FMEA |

## 4.2 FMEA WORKSHEETS

The Failure Modes and Effects Analysis follows.

### 4.2.1 Passive Components

Passive items are components that may be necessary for the performance of the system but do not change state during critical operations, or static structural members that do not transfer an applied force to an object to make the object move in some manner, unless otherwise accepted in NSTS 22206 as a passive component.

The following components were considered passive in the analysis:

**Table 2. Passive Component List**

| Item | Rationale |
|---|---|
| Static Structural Components | Static structural components do not provide an active function and are considered passive per NSTS 22206 paragraph 4.4.1.a.6 |
| Hook, Load Block, Wire Rope, Sheaves, Rope Drum | These components accepted as passive per NSTS 22206 paragraph 4.5.1.g. However, the drum shafts shall be analyzed as to the attachment method. See paragraph 2.5. |

The Hazard Analysis contains passive components that constitute a safety concern.

### 4.2.2 Wire Harnesses, Cables and Connectors

There are no GSE wire harnesses, cables, or connectors associated with the analysis for this system.

| **Table 3. FMEA – Hoist System** | | | | | | Pages 14 to 16 |
|---|---|---|---|---|---|---|
| **System / Subsystem:** 75 Ton Mobile Hydraulic Crane/Hoist System<br>**PMN:** K60-3188 | | | | | **Drawing No.:** VEN-5470<br>**Reference:** None | |
| **Find No.<br>Part No.** | **Part Name** | **Part Function** | **a. Failure Mode<br>b. Cause<br>c. FMN<br>d. Detection Method<br>e. Correcting Action<br>f. Time to Effect<br>g. Timeframe** | **Failure Effect On System Performance** | **Failure Effect On Vehicle Systems And / Or Personnel Safety** | **Crit Cat** |
| F2J0367 | Hydraulic Pump (winch) | Provides hydraulic pressure to drive winch motor. | Low/No output | Not enough pressure to operate winch motor. Delay of Operations. | No effect. | 3 |
| D7J0397 | Control Valve | Provides hydraulic movement control for raising, lowering a load. | a. Fails Open<br>b. Structural/Mechanical Failure<br>c. NA<br>d. Visual<br>e. Emergency Stop<br>f. 10-30 seconds<br>g. 2-5 seconds | Boom Hoist would continue to operate. Emergency stop prevents further movement. Delay of Operations. | No effect. Correcting action prevents further movement of Boom Hoist. | 3 |
| | | | Fails closed | Function selected (Raise/Lower) will not proceed. Load locked in position by winch brake. Delay of Operations. | No effect. | 3 |
| N3D0001 | Winch Assembly | Transfer torque from the hydraulic motor to the winch drum | a. Gears disengage<br>b. Structural failure of gears or shaft<br>c. 00210.002<br>d. Visual, Audible<br>e. None<br>f. Immediate<br>g. NA | Torque for stopping drum rotation will be lost. Load will continue to drop until an object stops it. | Possible loss of life and/ or flight hardware. | 1 |
| 3D 0342 | Bearings | Support winch drive shaft and allows rotation of the drum. | Bearings seizes | Winch drum will not turn. Delay of Operations. | No effect. | 3 |

**Table 3. FMEA – Hoist System** | Pages 14 to 16

**System / Subsystem:** 75 Ton Mobile Hydraulic Crane/Hoist System
**PMN:** K60-3188
**Drawing No.:** VEN-5470
**Reference:** None

| Find No. Part No. | Part Name | Part Function | a. Failure Mode<br>b. Cause<br>c. FMN<br>d. Detection Method<br>e. Correcting Action<br>f. Time to Effect<br>g. Timeframe | Failure Effect On System Performance | Failure Effect On Vehicle Systems And / Or Personnel Safety | Crit Cat |
|---|---|---|---|---|---|---|
| F2J0332 | Hydraulic motor assembly | Drives winch drum via planetary gear / winch assembly | Inoperative | Disk brake and clutch will hold load. Delay of Operations. | No effect. | 3 |
| D6J0867 | Counter balance valve assembly | Allows hydraulic fluid to flow through the winch motor. Serves as holding brake and prevents the load from dropping. | Fails open | 5 section closed centered control valve would hold load. Winch Brake would also hold the load. Multiple failures required. Delay of Operations. | No effect. | 3 |
| | | | Fails closed | Blocks fluid to the winch motor. Winch valve becomes inoperative. Delay of Operations. | No effect. | 3 |
| D7J0397 | Relief Valve | Relieves system overpressure | Fails to relieve | System over pressurized and shutdown. Delay of Operations. | No effect. | 3 |
| | | | Fails open | Relieves and dumps hydraulic fluid to tank. Delay of Operations. | No effect. | 3 |
| D6J0294 | 1 Section Control Valve Assembly | Controls Counterweight Removal Cylinder Assembly | Fails Open | Does not allow retraction of counterweight cylinder. Delay of operations. | No effect. | 3 |
| | | | Fails Closed | Does not allow counterweight to be put in place. Delay of operation. | No effect. | 3 |
| D7J0357 | Counterweight Removal Cylinder Assembly | Lifts counterweights before operations | Fails Open | Does not allow retraction of counterweight cylinder. Delay of operations. | No effect. | 3 |

| **Table 3. FMEA – Hoist System** | | | | | | Pages 14 to 16 |
|---|---|---|---|---|---|---|
| **System / Subsystem:** 75 Ton Mobile Hydraulic Crane/Hoist System<br>**PMN:** K60-3188 | | | | | **Drawing No.:** VEN-5470<br>**Reference:** None | |
| **Find No.<br>Part No.** | **Part Name** | **Part Function** | **a. Failure Mode<br>b. Cause<br>c. FMN<br>d. Detection Method<br>e. Correcting Action<br>f. Time to Effect<br>g. Timeframe** | **Failure Effect On System Performance** | **Failure Effect On Vehicle Systems And / Or Personnel Safety** | **Crit Cat** |
| | | | Fails Closed | Does not allow counterweight to be put in place. Delay of operation. | No effect. | 3 |

| **Table 4. FMEA - Mechanical** | | | | | | Pages 17 to 17 |
|---|---|---|---|---|---|---|
| **System / Subsystem:** 75 Ton Mobile Hydraulic Crane/Mechanical<br>**PMN:** K60-3188 | | | | | **Drawing No.:** VEN-5430<br>**Reference:** None | |
| **Find No.<br>Part No.** | **Part Name** | **Part Function** | **a. Failure Mode<br>b. Cause<br>c. FMN<br>d. Detection Method<br>e. Correcting Action<br>f. Time to Effect<br>g. Timeframe** | **Failure Effect On System Performance** | **Failure Effect On Vehicle Systems And / Or Personnel Safety** | **Crit Cat** |
| Reference Link-Belt Operator's Manual | Detroit Diesel Series 60, 12.7-liter 6 cylinder engine | Provides motive power for crane travel and all crane systems through hydraulic pumps and motors. | Inoperative | All pumps inoperative. All hydraulic lines to pumps and motors are blocked locking the valves and causing hydraulic motors to act as redundant holding brakes. Delay of Operations. | No effect. | 3 |

| **Table 5. FMEA - Carrier System** | | | | | | Pages 18 to 18 |
|---|---|---|---|---|---|---|
| **System / Subsystem:** 75 Ton Mobile Hydraulic Crane/Carrier System<br>**PMN:** K60-3188 | | | | | **Drawing No.:** VEN-5430<br>**Reference:** None | |
| **Find No.<br>Part No.** | **Part Name** | **Part Function** | **a. Failure Mode<br>b. Cause<br>c. FMN<br>d. Detection Method<br>e. Correcting Action<br>f. Time to Effect<br>g. Timeframe** | **Failure Effect On System Performance** | **Failure Effect On Vehicle Systems And / Or Personnel Safety** | **Crit Cat** |
| Reference Link-Belt No. 01-048-200 | Rotating Joint Assembly | Provides channels for hydraulic fluid supply to upper unit | Fails to operate | System holding valves will lock and safe system. Delay of Operations. | No effect. | 3 |

**Table 6. FMEA - Swing System** | Pages 19 to 21

**System / Subsystem:** 75 Ton Mobile Hydraulic Crane/Swing System
**PMN:** K60-3188
**Drawing No.:** VEN-5470
**Reference:** None

| Find No. Part No. | Part Name | Part Function | a. Failure Mode<br>b. Cause<br>c. FMN<br>d. Detection Method<br>e. Correcting Action<br>f. Time to Effect<br>g. Timeframe | Failure Effect On System Performance | Failure Effect On Vehicle Systems And / Or Personnel Safety | Crit Cat |
|---|---|---|---|---|---|---|
| F2J0367 | Swing pump | Provides hydraulic pressure for swing functions | Low output | Crane holding counterbalance valves would safe and hold system. Delay of Operations. | No effect. | 3 |
| | | | No output | Crane holding counterbalance valves would safe and hold system. Delay of Operations. | No effect. | 3 |
| E9J0230 | Swing control valves | Provides movement control for upper swing system. | a. Fails Open<br>b. Structural/Mechanical Failure<br>c. NA<br>d. Visual<br>e. Emergency Stop<br>f. 10-30 seconds<br>g. 2-5 seconds | Swing would continue to operate. Emergency stop prevents further movement. Delay of Operations. | No effect. Correcting action prevents further movement of Boom Hoist. | 3 |
| | | | Fails closed | Swing movement inoperative. Delay of Operations. | No effect. | 3 |
| D6J0648 | Swing hydraulic motor | Provides power necessary to rotate the upper structure 360 deg. | Inoperative | Upper structure fails to rotate. Delay of Operations. | No effect | 3 |
| D6F0002 | Swing Brake | Self contained dry multiple disc type brake used for holding the upper assembly, in any position over the carrier during normal, stationary crane operations. | Fails to engage | Reverse pressure to the swing control valve stops rotation. Delay of Operations. | No effect. | 3 |
| | | | Fails to disengage | Brake remains on, upper swing cannot rotate. Delay of Operations. | No effect. | 3 |

**Table 6. FMEA - Swing System** | Pages 19 to 21

**System / Subsystem:** 75 Ton Mobile Hydraulic Crane/Swing System
**PMN:** K60-3188
**Drawing No.:** VEN-5470
**Reference:** None

| Find No. Part No. | Part Name | Part Function | a. Failure Mode<br>b. Cause<br>c. FMN<br>d. Detection Method<br>e. Correcting Action<br>f. Time to Effect<br>g. Timeframe | Failure Effect On System Performance | Failure Effect On Vehicle Systems And / Or Personnel Safety | Crit Cat |
|---|---|---|---|---|---|---|
| 69J0575 | 2-position solenoid valve | Locks and unlocks swing brake | Fails to lock | Redundant service brake will prevent load from swinging. Delay of Operations. | No effect. | 3 |
| | | | Fails to unlock | Cannot rotate the swing. Delay of Operations. | No effect. | 3 |
| D3J0381 | Swing Brake Actuator | Used to stop rotation of the upper assembly over the carrier | Internal/ External leakage | Will lead to failure to actuate. Redundant service brake will prevent load from swinging. Delay of Operations. | No effect. | 3 |
| | | | Fails to actuate (Brake release) | Redundant service brake will prevent load from swinging. Delay of Operations. | No effect. | 3 |
| F2F0012 | Swing drive assembly | Transfer torque from the hydraulic motor to the turret assembly. | a. Gears disengage<br>b. Structural failure of the gears or shafts<br>c. 00210.001<br>d. Visual, Audible<br>e. None<br>f. Immediate<br>g. NA | Torque for stopping horizontal rotation will be lost. Boom will continue to swing until the weight of the load or object stops it. | Possible damage to flight hardware. | 2 |
| D6F0002 | 360 degree swing lock | Maintains set position of carrier to upper | Fails to hold | Swing brake would hold position. Delay of Operations. | No effect. | 3 |
| 65J0530 | Inlet relief valve | Prevent overpressure | Fails open | System inoperable. Delay of Operations. | No effect. | 3 |
| | | | Fails closed | Need over pressure condition. Double failure required. Delay of Operations. | No effect. | 3 |

| **Table 6. FMEA - Swing System** | | | | | | Pages 19 to 21 |
|---|---|---|---|---|---|---|
| **System / Subsystem:** 75 Ton Mobile Hydraulic Crane/Swing System<br>**PMN:** K60-3188 | | | | | **Drawing No.:** VEN-5470<br>**Reference:** None | |
| **Find No.<br>Part No.** | **Part Name** | **Part Function** | **a. Failure Mode<br>b. Cause<br>c. FMN<br>d. Detection Method<br>e. Correcting Action<br>f. Time to Effect<br>g. Timeframe** | **Failure Effect On System Performance** | **Failure Effect On Vehicle Systems And / Or Personnel Safety** | **Crit Cat** |
| D6J0263 | Check Valve | Keeps oil in the system during shutdown | Fails Open | No effect. Normal mode of operation will commence. | No effect. | 3 |
| | | | Fails Closed | Loss or diminished hydraulic fluid. Delay in operations. Multiple failures required. | No effect. | 3 |

**Table 7. FMEA – Mechanical Boom System** | Pages 22 to 24

**System / Subsystem:** 75 Ton Mobile Hydraulic Crane/Mechanical Boom System
**PMN:** K60-3188
**Drawing No.:** VEN-5431
**Reference:** None

| Find No. Part No. | Part Name | Part Function | a. Failure Mode<br>b. Cause<br>c. FMN<br>d. Detection Method<br>e. Correcting Action<br>f. Time to Effect<br>g. Timeframe | Failure Effect On System Performance | Failure Effect On Vehicle Systems And / Or Personnel Safety | Crit Cat |
|---|---|---|---|---|---|---|
| D7J0184 | Boom Telescope Cylinder | Uses hydraulic pressure provided by pump to extend, hold and retract boom. | Internal leak | Leak would cause failure to hold telescope position causing the load to drift downward. See ground rule 3c. | No effect. | 3 |
| | | | External leak | Telescope counterbalance would hold load. Delay of Operations. | No effect. | 3 |
| E8J0029 | Boom telescope Cylinder Counterbalance | Controls boom telescope cylinder and holds in position in the event of power loss | Fails open | 5 section closed centered control valve would hold load. Delay of Operations. | No effect. | 3 |
| | | | Fails closed | Boom hoist counterbalance valve would hold load, multiple failures required. Delay of Operations. | No effect. | 3 |
| D6J0371 | Thermal Relief Valve | Relieves pressure due to thermal expansion | Fails open | 5 section closed centered control valve would hold load. Delay of Operations. | No effect. | 3 |
| | | | Fails closed | Boom hoist counterbalance valve would hold load, multiple failures required. Delay of Operations. | No effect. | 3 |
| E9J0250 | 5 Section Control Valve | Provides controlled movement for boom extend/retract | a. Fails Open<br>b. Structural/Mechanical Failure<br>c. NA<br>d. Visual<br>e. Emergency Stop<br>f. 10-30 seconds<br>g. 2-5 seconds | Boom telescope would continue to operate. Emergency stop prevents further movement. Delay of Operations. | No effect. Correcting action prevents further movement of Boom Hoist. | 3 |

**Table 7. FMEA – Mechanical Boom System** | Pages 22 to 24

**System / Subsystem:** 75 Ton Mobile Hydraulic Crane/Mechanical Boom System
**PMN:** K60-3188
**Drawing No.:** VEN-5431
**Reference:** None

| Find No. Part No. | Part Name | Part Function | a. Failure Mode<br>b. Cause<br>c. FMN<br>d. Detection Method<br>e. Correcting Action<br>f. Time to Effect<br>g. Timeframe | Failure Effect On System Performance | Failure Effect On Vehicle Systems And / Or Personnel Safety | Crit Cat |
|---|---|---|---|---|---|---|
| | | | Fails closed | Boom telescope cylinder counterbalance would hold load. Delay of Operations. | No effect. | 3 |
| F2J0367 | 5 Section Gear Pump | Provides hydraulic pressure for boom and telescoping cylinders | Low output | Loss of hydraulic power and boom hoist functions. Fluid holding valves would safe and hold system. Delay of Operations. | No effect. | 3 |
| | | | No output | Loss of hydraulic power and boom hoist functions. Fluid holding valves would safe and hold system. Delay of Operations. | No effect. | 3 |
| F7J0358 | Single Axis Controllers | Allows operator to control movement | Fails to operate | Control loss, power shut down. Delay of Operations. Multiple failures required. | No effect. | 3 |
| D3J0284 | Foot Control Valve | Allows operator to control movement of telescopic cylinder | Fails to operate | Control loss, power shut down. Delay of Operations. Multiple failures required. | No effect. | 3 |
| | | | Fails in operate position | Single Axis controller can still operate movement. Delay in operations. | No effect. | 3 |
| F2D0021 | Reeling Drum | Provides boom travel distance | Fails to operate | Operator visually checks position. Delay of Operations. | No effect. | 3 |
| F2J0289 | Boom Cylinder | Uses hydraulic pressure provided by main pump to lift boom | Internal leak | Leak would cause failure to hold boom position causing the load to drift downward. See ground rule 3c. | No effect. | 3 |
| | | | External leak | Hoist will not drift unless piston seal is broken. Delay of Operations. | No effect. | 3 |

**Table 7. FMEA – Mechanical Boom System** | Pages 22 to 24

**System / Subsystem:** 75 Ton Mobile Hydraulic Crane/Mechanical Boom System
**PMN:** K60-3188
**Drawing No.:** VEN-5431
**Reference:** None

| Find No. Part No. | Part Name | Part Function | a. Failure Mode<br>b. Cause<br>c. FMN<br>d. Detection Method<br>e. Correcting Action<br>f. Time to Effect<br>g. Timeframe | Failure Effect On System Performance | Failure Effect On Vehicle Systems And / Or Personnel Safety | Crit Cat |
|---|---|---|---|---|---|---|
| D7J0373 | Boom hoist counterbalance valve | Uses hydraulic pressure provided by main pump to lift hold and lower boom. | Fails open | Boom hoist cylinder Control Valve would hold load, double failure required. Delay of Operations. | No effect. | 3 |
| | | | Fails closed | Boom hoist cylinder hydraulically locked in position. Delay of Operations. | No effect. | 3 |
| D6J0862 | Section control valve | Provides controlled movement for boom hoist and extend | a. Fails Open<br>b. Structural/Mechanical Failure<br>c. NA<br>d. Visual<br>e. Emergency Stop<br>f. 10-30 seconds<br>g. 2-5 seconds | Boom telescope would continue to operate. Emergency stop prevents further movement. Delay of Operations. | No effect. Correcting action prevents further movement of Boom Hoist. | 3 |
| | | | Fails closed | Control for raising, lowering boom inoperative. Delay of Operations. | No effect. | 3 |
| 65J0568 | Velocity Fuse | Closes and holds the pressure in the boom hoist cylinder during a break in the LMI line. | a. Fails Open<br>b. Structural/Mechanical Failure<br>c. 00210.003<br>d. N/A<br>e. N/A<br>f. 2-5 seconds<br>g. N/A | Failure of the velocity switch and subsequent break in the flex hose would lead to uncontrolled drop of the boom. | Possible loss of life and/ or damage to flight hardware. | 1R |
| | | | Fails closed | Lose control of LMI controls. Delay of operations. | No effect | 3 |

**Table 8. FMEA – Mechanical Outrigger Section** | Pages 25 to 27

**System / Subsystem:** 75 Ton Mobile Hydraulic Crane/Mechanical outrigger section
**PMN:** K60-3188
**Drawing No.:** VEN-5431
**Reference:** None

| Find No. Part No. | Part Name | Part Function | a. Failure Mode<br>b. Cause<br>c. FMN<br>d. Detection Method<br>e. Correcting Action<br>f. Time to Effect<br>g. Timeframe | Failure Effect On System Performance | Failure Effect On Vehicle Systems And / Or Personnel Safety | Crit Cat |
|---|---|---|---|---|---|---|
| D6J1069 | Left outrigger beam cylinder assembly | Extend or retract outrigger beam | Fails to extend | Inability to extend outrigger beam. Delay of Operations. | No effect. | 3 |
| | | | Fails to retract | Inability to retract outrigger beam. Delay of Operations. | No effect. | 3 |
| D6J1068 | Right outrigger beam cylinder assembly | Extend or retract outrigger beam | Fails to extend | Inability to extend outrigger beam. Delay of Operations. | No effect. | 3 |
| | | | Fails to retract | Inability to retract outrigger beam. Delay of Operations. | No effect. | 3 |
| E9J0260 | Outrigger Jack Cylinder Assembly | Lift and lower crane when outriggers are used for operations | Internal leak | The holding valve will prevent the fluid from coming out of the cylinder. Multiple failures required. Delay of Operations. | No effect. | 3 |
| | | | External leak | The holding valve will prevent the fluid from coming out of the cylinder. Multiple failures required. Delay of Operations. | No effect. | 3 |
| 69J0057 | Holding valve | Thermal relief valve prevents excessive pressure build up due to thermal expansion of the hydraulic fluid | Fails open | Outrigger 2-way solenoid valve and 4-way directional valve would hold load. Multiple failures required. Delay of Operations. | No effect. | 3 |
| | | | Fails closed | Control for moving the outriggers inoperative. Delay of Operations. | No effect. | 3 |

**Table 8. FMEA – Mechanical Outrigger Section** | Pages 25 to 27

**System / Subsystem:** 75 Ton Mobile Hydraulic Crane/Mechanical outrigger section
**PMN:** K60-3188
**Drawing No.:** VEN-5431
**Reference:** None

| Find No. Part No. | Part Name | Part Function | a. Failure Mode<br>b. Cause<br>c. FMN<br>d. Detection Method<br>e. Correcting Action<br>f. Time to Effect<br>g. Timeframe | Failure Effect On System Performance | Failure Effect On Vehicle Systems And / Or Personnel Safety | Crit Cat |
|---|---|---|---|---|---|---|
| F1J0079 | Outrigger 2 way solenoid valve | Controls hydraulic fluid flow for outrigger extension and retraction | Fails open | Holding valve and 4-way directional valve would hold load. Multiple failures required. Delay of Operations. | No effect. | 3 |
| | | | Fails closed | Control for moving the outriggers inoperative. Delay of Operations. | No effect. | 3 |
| D7J0438 | 4-way Directional Valve | Controls hydraulic fluid flow for outrigger extension and retraction | Fails open | Outrigger 2-way solenoid valve and holding valve would hold load. Multiple failures required. Delay of Operations. | No effect. | 3 |
| | | | Fails closed | Control for moving the outriggers inoperative. Delay of Operations. | No effect. | 3 |
| F8J0302 | 5th Outrigger Directional Control Valve | Controls extension and retraction of 5th outrigger cylinder. | Fails open | Selected function will operate unimpeded. Delay of Operations. | No effect. | 3 |
| | | | Fails closed | Control for moving the outrigger inoperative. Delay of Operations. | No effect. | 3 |
| L8J0010 | 5th Outrigger Jack Cylinder Assembly | Lift and lower crane when outriggers are used for operations | Internal leak | The holding valve will prevent the fluid from coming out of the cylinder. Multiple failures required. Delay of Operations. | No effect. | 3 |
| | | | External leak | The holding valve will prevent the fluid from coming out of the cylinder. Multiple failures required. Delay of Operations. | No effect. | 3 |
| L8J0648 | Relief Valve | Relieves overpressure condition | Fails open | Continual dump back to reservoir. Delay of Operations. | No effect. | 3 |

| **Table 8. FMEA – Mechanical Outrigger Section** | | | | | | Pages 25 to 27 |
|---|---|---|---|---|---|---|
| **System / Subsystem:** 75 Ton Mobile Hydraulic Crane/Mechanical outrigger section<br>**PMN:** K60-3188 | | | | | **Drawing No.:** VEN-5431<br>**Reference:** None | |
| **Find No.<br>Part No.** | **Part Name** | **Part Function** | **a. Failure Mode<br>b. Cause<br>c. FMN<br>d. Detection Method<br>e. Correcting Action<br>f. Time to Effect<br>g. Timeframe** | **Failure Effect On System Performance** | **Failure Effect On Vehicle Systems And / Or Personnel Safety** | **Crit Cat** |
| | | | Fails closed | System overpressure. Delay of Operations. | No effect. | 3 |

**Table 9. FMEA –Electrical System** | Pages 28 to 29

**System / Subsystem:** 75 Ton Mobile Hydraulic Crane/Electrical System
**PMN:** K60-3188
**Drawing No.:** VEN-5431
**Reference:** None

| Find No. Part No. | Part Name | Part Function | a. Failure Mode<br>b. Cause<br>c. FMN<br>d. Detection Method<br>e. Correcting Action<br>f. Time to Effect<br>g. Timeframe | Failure Effect On System Performance | Failure Effect On Vehicle Systems And / Or Personnel Safety | Crit Cat |
|---|---|---|---|---|---|---|
| Reference Link-Belt Operator's Manual | Outrigger control switch | Select and empower either the extend or retract mode of outrigger beams and jacks. | Fails extend (beam) | Failure to extend beam. Delay of Operations. | No effect. | 3 |
| | | | Fails retract (beam) | Fails to retract beam. Delay of Operations. | No effect. | 3 |
| | | | Fails extend (jack) | Failure to extend jack. Delay of Operations. | No effect. | 3 |
| | | | Fails retract (jack) | Fails to retract jack. Delay of Operations. | No effect. | 3 |
| E8L0014 | Anti-two Block Switch | Activates the audio/visual warning to operator of approaching two-block situation. Provides cutout function to prevent further lifting operations. | Fails open | Audio/visual warning system will not operate. Operator will visually note approaching condition and halt lifting operation. | No effect. | 3 |
| | | | Fails closed | There will be a continuous, erroneous two-block indication. Delay of Operations. | No effect. | 3 |
| Microguard 434 | Rated Capacity Limiter | Displays various crane functions | Displays not available | This system is used as an aid to the operator. Load charts are used to calculate crane capacity for all lifts. | No effect. | 3 |
| | | | Displays incorrect | This system is used as an aid to the operator. Load charts are used to calculate crane capacity for all lifts. | No effect. | 3 |

| **Table 9. FMEA –Electrical System** | | | | | | Pages 28 to 29 |
|---|---|---|---|---|---|---|
| **System / Subsystem:** 75 Ton Mobile Hydraulic Crane/Electrical System<br>**PMN:** K60-3188 | | | | | **Drawing No.:** VEN-5431<br>**Reference:** None | |
| **Find No.<br>Part No.** | **Part Name** | **Part Function** | **a. Failure Mode<br>b. Cause<br>c. FMN<br>d. Detection Method<br>e. Correcting Action<br>f. Time to Effect<br>g. Timeframe** | **Failure Effect On System Performance** | **Failure Effect On Vehicle Systems And / Or Personnel Safety** | **Crit Cat** |
| N3R0056 | Winch Drum Rotational Indicator | Provides signal to operator's control hand giving indication of drum speed, by vibration. | Rotation sensor does not function. | Operator visually checks speed of lift/lower. Delay of Operations. | No effect. | 3 |
| | E-Stop | Cuts power to the engine in event of emergency. | Fails open | Cannot run the engine. No hydraulic functions can be run. | No effect. | 3 |
| | | | Fails closed | Cannot cut power in emergency. Multiple failures required. | No effect. | 3 |

**Table 10. Flexhose FMEA** | Pages 30 to 32

**System / Subsystem:** 75 Ton Mobile Hydraulic Crane
**PMN:** K60-3188

**Drawing No.:** VEN-5470
**Reference:** None

| Find No. Qty NASA Part No. | MFG Name MFG Part No. | Material | Fluid Media | Inside Dia. (in.) | Max Oper / Proof / Burst Pressure (psig) | Bend Radius (in.) | Failure Effect On System Performance, Vehicle Systems, And / Or Personnel Safety | Crit Cat |
|---|---|---|---|---|---|---|---|---|
| | D3J0214 | | | | | | Outrigger supply and return hose. Failure of the hose would not cause any fluid to leak from the outrigger. Holding valve or 2-way solenoid valve will prevent fluid from leaking out of cylinder. Fluid will spill on ground. Delay of operations. | 3 |
| | D6J0881 | | | | | | Left front outrigger supply and return hoses. Failure of the hose would not cause any fluid to leak from the outrigger. Holding valve or 2-way solenoid valve will prevent fluid from leaking out of cylinder. Fluid will spill on ground. Delay of operations. | 3 |
| | D6J0882 | | | | | | Left rear outrigger supply and return hoses. Failure of the hose would not cause any fluid to leak from the outrigger. Holding valve or 2-way solenoid valve will prevent fluid from leaking out of cylinder. Fluid will spill on ground. Delay of operations. | 3 |
| | D6J0881 | | | | | | Right front outrigger supply and return hoses. Failure of the hose would not cause any fluid to leak from the outrigger. Holding valve or 2-way solenoid valve will prevent fluid from leaking out of cylinder. Fluid will spill on ground. Delay of operations. | 3 |
| | D6J0882 | | | | | | Right rear outrigger supply and return hoses. Failure of the hose would not cause any fluid to leak from the outrigger. Holding valve or 2-way solenoid valve will prevent fluid from leaking out of cylinder. Fluid will spill on ground. Delay of operations. | 3 |

**Table 10. Flexhose FMEA** | Pages 30 to 32

**System / Subsystem:** 75 Ton Mobile Hydraulic Crane
**PMN:** K60-3188

**Drawing No.:** VEN-5470
**Reference:** None

| Find No. Qty NASA Part No. | MFG Name MFG Part No. | Material | Fluid Media | Inside Dia. (in.) | Max Oper / Proof / Burst Pressure (psig) | Bend Radius (in.) | Failure Effect On System Performance, Vehicle Systems, And / Or Personnel Safety | Crit Cat |
|---|---|---|---|---|---|---|---|---|
| | F2M0087 | | | | | | Telescope cylinder supply and return hoses. Failure of the hose would not cause any fluid to leak from the telescope cylinder holding valve will prevent fluid from leaking out. Delay of operations. | 3 |
| | F2M0088 | | | | | | Telescope cylinder supply and return hoses. Failure of the hose would not cause any fluid to leak from the telescope cylinder. Holding valve will prevent fluid from leaking out. Delay of operations. | 3 |
| | 69J0393 | | | | | | Rear Winch supply hose. Failure of the hose would not cause any fluid to leak from the telescope cylinder. Holding valve will prevent fluid from leaking out. Delay of operations. | 3 |
| | 65J0447 | | | | | | Rear Winch return hose. Failure of the hose would not cause any fluid to leak from the telescope cylinder. Holding valve will prevent fluid from leaking out. Delay of operations. | 3 |
| | D3J0214 | | | | | | Swing Motor supply and return hoses. Failure of the hose would not cause any fluid to leak from the telescope cylinder. Holding valve will prevent fluid from leaking out. Delay of operations. | 3 |
| | 65J0887 | | | | | | Swing Motor supply and return hoses. Failure of the hose would not cause any fluid to leak from the telescope cylinder. Holding valve will prevent fluid from leaking out. Delay of operations. | 3 |
| | D7J0466 | | | | | | Boom cylinder supply and return hoses. Failure of the hose would not cause any fluid to leak from the telescope cylinder. Holding valve will prevent fluid from leaking out. Delay of operations. | 3 |

**Table 10. Flexhose FMEA** | Pages 30 to 32

**System / Subsystem:** 75 Ton Mobile Hydraulic Crane
**PMN:** K60-3188

**Drawing No.:** VEN-5470
**Reference:** None

| Find No. Qty NASA Part No. | MFG Name MFG Part No. | Material | Fluid Media | Inside Dia. (in.) | Max Oper / Proof / Burst Pressure (psig) | Bend Radius (in.) | Failure Effect On System Performance, Vehicle Systems, And / Or Personnel Safety | Crit Cat |
|---|---|---|---|---|---|---|---|---|
| NA<br>1<br>None | Link-Belt<br>E9J0263 | Black, oil and abrasion resistant Neoprene | ISO-46 hydraulic fluid | 1/4″ | 4000/5000/20000 | 2″ | Failure of the hose would cause fluid to flow out of the blind end of the boom hoist cylinder. This along with failure of the velocity switch could cause loss of life/damage to flight hardware. FMN00210.004. | 1R |

| **Table 11. Filter FMEA** | | | | | | | | Pages 33 to 33 |
|---|---|---|---|---|---|---|---|---|
| **System / Subsystem:** 75 Ton Mobile Hydraulic Crane<br>**PMN:** K60-3188 | | | | | | | **Drawing No.:** VEN-5431<br>**Reference:** None | |
| **Find No.<br>Qty<br>NASA Part No.** | **MFG Name<br>MFG Part No.** | **Part Function** | **Filter Rating (μ)** | **Design / Burst Pressure (psig)** | **Element Collapse Pressure (psid)** | **Failure Mode** | **Failure Effect On System Performance, Vehicle Systems, And / Or Personnel Safety** | **Crit Cat** |
| F2J0261 | | Prevent contamination of down-stream components | | | | Clogs | Hydraulic fluid return flow to reservoir restricted, delay in operations | 3 |
| | | | | | | Passes contaminants | Cylinders, lines or valves may clog restricting motion. Delay in operations. | 3 |

### 4.3 COMPUTER INTERFACE ANALYSIS

This system does not use an LPS, INCS, or KCCS computer interface for remote control and/or monitoring of the critical system functions identified in Section 4.1.

## 5 HAZARD ANALYSIS

The Hazard Report database was researched and the following Hazard Reports were identified.

| **SSP Shuttle Hazard Reports** | |
|---|---|
| **Number** | **Title** |
| LL-0025 | Failure of PCR Floor if Load Dropped During Lift |
| USA Intranet Home Page - Data Warehouse (ADAM) – WebPCASS – Hazard Reports | |

| **KSC Industrial Hazard Reports** | |
|---|---|
| **Number** | **Title** |
| LL-0012 | Personnel Required to Perform Work While Beneath Suspended Loads During Flight Hardware Processing at KSC/DFRF/CLS/VAFB |
| USA Intranet Home Page – Departments – 54500, Mission Assurance – Safety Engineering – Hazard Reports | |

The Hazard Analysis Worksheets follow. Appendix B contains the Fault Tree Analysis.

| **Table 12. Hazard Analysis Worksheet – K60-3188** | | | Pages 35 to 36 |
|---|---|---|---|
| **System / Subsystem:** 75 Ton Mobile Hydraulic Crane | | | **Location:** KSC |
| **Gate No.<br>Hazardous Condition** | **Severity** | **Event No.<br>Event Nomenclature (Hazard Cause)** | **Safety Requirements & Hazard Cause Control<br>Provision / Verification** |
| Gate 001<br>Loss of Life/Vehicle, Flight Hardware Damage, and/or Personnel Injury | CA | Event1<br>Operator error | All operators are trained and certified (CSR-342 or 343) in the operation of the 75 Ton Link Belt Mobile Crane. The certs require the operator to be familiar with the E-Stop and emergency operations of the 75 Ton Link Belt Mobile Crane. These requirements include familiarity of the emergency lowering functions designed into the 75 Ton Link Belt Mobile Crane and any correcting action that has to be taken in the event the booms were to drift downward. |
| | | Event 2<br>Lack of Maintenance | Job plan HE202031MQ requires quarterly maintenance and Job plan HE202031MA requires annual maintenance. Annual load tests are performed per Job Plan 202031. |
| | | Event3<br>Failure of Swing Drive Assembly<br>FMN: 00210.001 | See CIL sheet. |
| | | Event4<br>Failure of Winch Assembly<br>FMN: 00210.002 | See CIL sheet. See HR LL-0012. See HR LL-0025. |
| | | Event5<br>Hardware Failure | Annual load tests are performed per Job Plan 202031. |
| | | Event6<br>Release Rocker Switch | All operators are trained and certified (CSR-342 or 343) in the operation of the 75 Ton Link Belt Mobile Crane. The certs require the operator to be familiar with the E-Stop and emergency operations of the 75 Ton Link Belt Mobile Crane. These requirements include familiarity of the emergency lowering functions designed into the 75 Ton Link Belt Mobile Crane and any correcting action that has to be taken in the event the booms were to drift downward. |

| Table 12. Hazard Analysis Worksheet – K60-3188 | | | Pages 35 to 36 |
|---|---|---|---|
| **System / Subsystem:** 75 Ton Mobile Hydraulic Crane | | | **Location:** KSC |
| **Gate No. Hazardous Condition** | **Severity** | **Event No. Event Nomenclature (Hazard Cause)** | **Safety Requirements & Hazard Cause Control Provision / Verification** |
| | | Event 7<br>Reposition the Boom | All operators are trained and certified (CSR-342 or 343) in the operation of the 75 Ton Link Belt Mobile Crane. The certs require the operator to be familiar with the E-Stop and emergency operations of the 75 Ton Link Belt Mobile Crane. These requirements include familiarity of the emergency lowering functions designed into the 75 Ton Link Belt Mobile Crane and any correcting action that has to be taken in the event the booms were to drift downward. |
| | | Event 8<br>Outrigger Holding Valve Failure | Outriggers are tested, inspected per Job Plan 202031. |
| | | Event 9<br>Outrigger Cylinder Piston Seal Failure | Outriggers are tested, inspected per Job Plan 202031. |
| | | Event 10<br>Solenoid Valve Failure | Outriggers are tested, inspected per Job Plan 202031. |
| | | Event 11<br>LMI Flex hose Rupture<br>FMN: 00210.004 | See CIL sheet. |
| | | Event 12<br>Velocity Fuse Failure<br>FMN: 00210.003 | See CIL sheet. |

# Appendix A. DEFINITIONS

The following FMEA criticality categories, hazard analysis data elements, and definitions were used throughout this analysis.

## A.1 FMEA CRITICALITY CATEGORIES

| Category | Definitions |
|---|---|
| 1 | Single failure, which could result in loss of life or vehicle. |
| 1R | Two redundant hardware items, which if both failed, could result in loss of life or vehicle (or loss of one or more of the safety or hazard monitoring systems listed in Table 4.5, NSTS 22206). |
| 1S | Single failure in a safety or hazard monitoring system that could cause the system to fail to detect, combat, or operate when needed during the existence of a hazardous condition and could result in loss of life or vehicle. |
| 2 | Single failure which could result in loss (damage) of a vehicle system. |
| 3 | All others. (Note: Category 3 single failure points are not CIL items) |

## A.2 HAZARD ANALYSIS DATA ELEMENTS

**Severity Level** – The severity level is an assessment of the most severe effects of a hazard

- **Catastrophic (CA)** – Hazard could result in a mishap causing fatal injury to personnel and/or loss of one or more major elements of the flight vehicle or ground facility.
- **Critical (CR)** – Hazard could result in serious injury to personnel and/or damage to flight or ground equipment which would cause mission abort or a signification program delay.
- **Marginal (MR)** – Hazard could result in a mishap of minor nature inflicting firs-aid injury to personnel and/or damage to flight or ground equipment that can be tolerated without abort or repaired with significant program delay.

**Likelihood of Occurrence** – The likelihood of occurrence is an assessment of the most severe effects of a hazard transpiring. Likelihood is assessed considering the effectiveness of the controls in place for the life of the program.

- **Probable** – Expected to happen in the life of the program.
- **Infrequent** – Could happen in the life of the program. Controls have significant limitations or uncertainties.
- **Remote** – Could happen in the life of the program, but not expected. Controls have minor limitations or uncertainties.
- **Improbable** – Extremely remote possibility that it will happen in the life of the program. Strong controls in place.

## A.3 DEFINITIONS

**Critical Item** – A critical item is defined as any on of the following:

a) A Criticality Category 1, 1S or 2 Single Failure Point.

b) A redundant hardware item where the second failure results in loss of life or vehicle and the item is not capable of checkout during normal ground operations (i.e., a single fault tolerant item which fails Redundancy Screen A.) This a Criticality Category 1R item

**Critical System** – A system is assessed as critical if loss of overall system function or improper performance of a system function could result in loss of life, loss of vehicle, or damage to a vehicle system.

**Criticality** – The relative measure of the consequences of a failure mode.

**Passive Component** – A component that may be necessary to the performance or structural integrity of the system but has no active function.

**Safety Critical** - As defined in NSTS 5300.4(1D−2), Facility, support, test, and flight systems containing:

a) Pressurized vessels, lines, and components.
b) Propellants, including cryogenics and hypergolics.
c) Hydraulics and pneumatics.
d) High voltages.
e) Radiation sources.
f) Ordnance and explosive devices or devices used for ordnance and explosive checkout.
g) Flammable, toxic, cryogenic, hypergolic, or reactive elements or compounds.
h) High temperatures.
i) Electrical equipment that operates in the area where flammable fluids or solids are located.
j) Equipment used for handling program hardware.
k) Equipment used for personnel walking and work platforms.
l) High volume flow.
m) Radiant energy equipment with high-speed dynamic powered components in its operation.
n) Electrical equipment utilized for control of safety critical, and personnel rescue equipment.
o) Hoisting equipment.

**Single Failure Point** – A single item of hardware, the failure of which could result in loss of life/vehicle or damage to a vehicle system.

**1R Non-CILs** – Functional Criticality 1R failure modes which exceed the NSTS 07700, Volume X, fail-safe requirement by being at least single-fault tolerant, and satisfy the NSTS 07700, Volume X, requirements for redundancy verification and/or separation of critical functions (i.e., pass NSTS 22206 redundancy screens and/or NSTS 08080-1 Standards 4B and criticality 1S applicable to 20A).

## A.4 FAULT TREE SYMBOLS

**AND** GATE
Output fault occurs only if all of the multiple input faults occur.

**OR** GATE
Output fault occurs if any one of the multiple input faults occur.

**VOTING** GATE
Output occurs if and only if at least m out of the n input faults occur.

**TRANSFER**
Indicates that the Fault Tree continues on another page or comes from another another page as indicated by associated text.

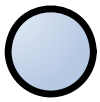

**BASIC** EVENT
A basic initiating fault requiring no further development.

**UNDEVELOPED** EVENT
An initiating fault not developed further because another analysis covers the event, there is insufficient information, or further development does not aid in identifying system faults.

**EXPECTED** EVENT, also called a **HOUSE** EVENT
An event that is normally expected to occur.

# Appendix B. FAULT TREE ANALYSIS

Relex Software Report

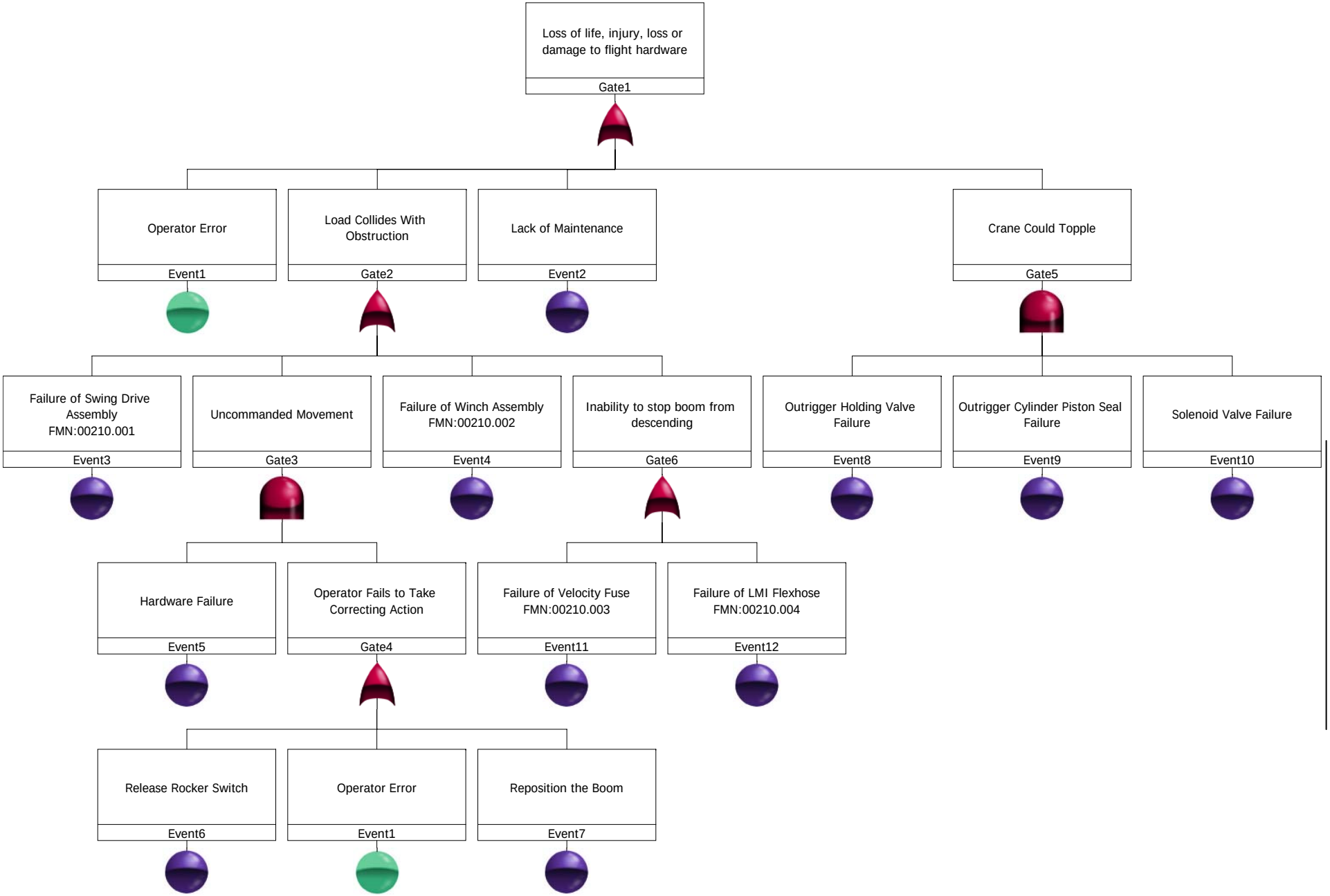

# Appendix C. CRITICAL ITEMS LIST

**USA Ground Operations CIL Sheet**

**Critical Item:** Swing Drive Assembly
**Criticality Category:** 2
**NASA Part No:** None
**Total Quantity:** 1
**Mfg/Part No:** Link-Belt / F2F0012
**System:** 075-Ton Link-Belt Mobile Crane

| Find No. | Qty | Area | PMN | Baseline | Drawing / Sheet |
|---|---|---|---|---|---|
| None | 1 | KSC | K60-3188 | 330.00 | VEN-5470 / 797 |

**Function:**

Transfer torque from the hydraulic motor to the turret assembly.

| Failure Mode No.<br>Failure Mode | Failure Cause<br>Failure Effect | Detection Method<br>Time to Effect | Crit Cat |
|---|---|---|---|
| 00210.001<br><br>Gear disengages | Structural failure of the gears or shafts<br><br>Torque for stopping horizontal rotation will be lost. Boom will continue to swing until the weight of the load or object stops it. Possible loss (damage) to flight hardware. | Audible, Visual<br><br>Immediate | 2 |

**ACCEPTANCE RATIONALE**

**Design:**

- The crane is designed and manufactured to the following standards:
  - ANSI B30.5 (American National Standard Mobile and Locomotive Cranes)
  - CFR 29 (Codes of Federal Regulations) Part 1910.180 Occupational Safety and Health Standards Crawler, Locomotive and Truck Cranes
  - CFR 29 (Codes of Federal Regulations) Part 1926.550 Safety and Health Regulations for Construction Cranes and Derricks.
- Per operating procedures for critical lifts, an additional downgrade of 75% from the ANSI standard load of 85% provides an additional factor of safety.

**Test:**

- OMRSD File VI requires annual operational test of turret rotation in accordance with NASA-STD-8719.9.
- Oil sampling testing is performed annually per Job Plan HE202031MA.

**Inspection:**

- OMRSD File VI requires annual inspection of the ring and pinion gears in accordance with NASA-STD-8719.9.

**Failure History:**

- Current data on test failures, unexplained anomalies, and other failures experienced during ground processing activities can be found in the PRACA database. The PRACA database was researched and no data was found on this component in the critical failure mode.

- The GIDEP database was researched and no data was found on this component in the critical failure mode.

**Operational Use:**

| Correcting Action | Timeframe |
|---|---|
| There is no action which can be taken to mitigate the failure effect. | Since no correcting action is available, timeframe does not apply. |

**USA Ground Operations CIL Sheet**

**Critical Item:** Winch Assembly
**Criticality Category:** 1
**NASA Part No:** None
**Total Quantity:** 1
**Mfg/Part No:** Link-Belt / N3D0001
**System:** 075-Ton Link-Belt Mobile Crane

| Find No. | Qty | Area | PMN | Baseline | Drawing / Sheet |
|---|---|---|---|---|---|
| None | 1 | KSC | K60-3188 | 330.00 | VEN-5470 / 904 |

**Function:**

Transfer torque from the hydraulic motor to the winch drum.

| Failure Mode No.<br>Failure Mode | Failure Cause<br>Failure Effect | Detection Method<br>Time to Effect | Crit Cat |
|---|---|---|---|
| 00210.002<br><br>Gears Disengage | Structural failure of the gears or shaft<br><br>Torque for holding the load will be lost. Load suspended from the hook will drop. Possible loss of life or vehicle. The worst case of criticality applies because of plans to use the crane to lift flight hardware and/or GSE containing hazardous materials (e.g., the hydrazine cart at the launch Pad, contingency.) | Audible, Visual<br><br>Immediate | 1 |

**ACCEPTANCE RATIONALE**

**Design:**

- The crane is designed and manufactured to the following standards:
  - ANSI B30.5 (American National Standard Mobile and Locomotive Cranes)
  - CFR 29 (Codes of Federal Regulations) Part 1910.180 Occupational Safety and Health Standards Crawler, Locomotive and Truck Cranes
  - CFR 29 (Codes of Federal Regulations) Part 1926.550 Safety and Health Regulations for Construction Cranes and Derricks.
- Per operating procedures for critical lifts, an additional downgrade of 75% from the ANSI standard load of 85% provides an additional factor of safety.

**Test:**

- OMRSD File VI requires performance of an annual rated load test in accordance with NASA-STD-8719.9.
- Oil sampling testing is performed annually per Job Plan HE202031MA.

**Inspection:**

- None

**Failure History:**

- Current data on test failures, unexplained anomalies, and other failures experienced during ground processing activities can be found in the PRACA database. The PRACA database was researched and no data was found on this component in the critical failure mode.

- The GIDEP database was researched and no data was found on this component in the critical failure mode.

**Operational Use:**

| Correcting Action | Timeframe |
|---|---|
| There is no action which can be taken to mitigate the failure effect. | Since no correcting action is available, timeframe does not apply. |

## USA Ground Operations 1R Non-CIL Sheet

**1R Non-CIL Item:** Velocity Fuse
**NASA Part No:** None
**Mfg/Part No:** Link-Belt / None
**System:** 075-Ton Link Belt Mobile Crane

**Criticality Category:** 1R
**Total Quantity:** 1

| Find No. | Qty | Area | PMN | Baseline | Drawing / Sheet |
|---|---|---|---|---|---|
| None | 1 | KSC | K60-3188 | 330.00 | VEN-5470 / N/A |

**Function:**

Closes and holds the pressure in the boom hoist cylinder during a break in the LMI line.

| Failure Mode No.<br>Failure Mode | Failure Cause<br>Failure Effect | Detection Method<br>Time to Effect | Crit Cat |
|---|---|---|---|
| 00210.003<br><br>Fails open | Structural failure of velocity fuse<br><br>Failure of the velocity fuse and subsequent break in the LMI flexhose would lead to uncontrolled drop of the boom. Possible loss of life. | Visual<br><br>Seconds | 1R |

**ACCEPTANCE RATIONALE**

| **Redundancy Screens:** | | **Pass/Fail** |
|---|---|---|
| **A** | Item is verifiable during normal ground operations | Pass |
| **B** | Item loss is readily detectable by the ground crew | Fail |
| **C** | Loss of all redundant items cannot result from a single cause | Pass |

**Conforms to NSTS 08080-1:** N/A

**Test and Inspection:**

OMRS File VI requires an annual pressure test of the Velocity Fuse.

## USA Ground Operations 1R Non-CIL Sheet

**1R Non-CIL Item:** LMI Flexhose
**Criticality Category:** 1R
**NASA Part No:** None
**Total Quantity:** 1
**Mfg/Part No:** Link Belt / None
**System:** 075-Ton Link Belt Mobile Crane

| Find No. | Qty | Area | PMN | Baseline | Drawing / Sheet |
|---|---|---|---|---|---|
| None | 1 | KSC | K60-3188 | 330.00 | VEN-5470 / N/A |

**Function:**

Transfers hydraulic fluid from Load Moment Indicator to Boom Cylinder.

| Failure Mode No.<br>Failure Mode | Failure Cause<br>Failure Effect | Detection Method<br>Time to Effect | Crit Cat |
|---|---|---|---|
| 00210.004<br><br>Ruptures | Rupture in flexhose.<br><br>Failure of the hose would cause fluid to flow out of the blind end of the boom hoist cylinder. This along with failure of the velocity switch could cause loss of life/damage to flight hardware. | Visual<br><br>Seconds | 1R |

**ACCEPTANCE RATIONALE**

| **Redundancy Screens:** | | **Pass/Fail** |
|---|---|---|
| **A** | Item is verifiable during normal ground operations | Pass |
| **B** | Item loss is readily detectable by the ground crew | Pass |
| **C** | Loss of all redundant items cannot result from a single cause | Pass |

**Conforms to NSTS 08080-1:** N/A

**Test and Inspection:**

OMRS File VI requires annual inspection of LMI Flexhose.