APPROVAL SHEET FOR SUSPENDED LOAD OPERATIONS

SLO-KSC-2010-001

TITLE

MSL Suspended Load Identification and Description

DOCUMENT
NUMBER/TITLE: MSL-213-3316

PREPARED BY: Ronald T. Welch, MSL Project Safety DATE: 04/23/11

CHECK APPROPRIATE BOX:

☐ Single Occurrence Operation ☒ Multiple Occurrence Operation ☐ Revision to Existing SLOAA

IF REVISION TO EXISTING SLOAA, SUMMARIZE CHANGES / RATIONALE:

REQUIRED APPROVAL:

CONTRACTOR _____DESIGN _____R & QA _____OPERATIONS _____SAFETY

NASA _____DESIGN _____R & QA _____OPERATIONS _____SAFETY

TYPE OR PRINT NAME	SIGNATURE	ORG.	DATE
Joe Torsani (KSC LDEM)		SA-G2	6 MAY 2011
Megan Jaunich		SA-D1	05/06/11

CONTRACTOR DIRECTOR OF SAFETY

[See SLOAA Cover for additional signatures]

Mars Science Laboratory

Suspended Load Operations Conducted at the Kennedy Space Center Payload Hazardous Servicing Facility (PHSF)

JPL D-67901
MSL 213-3316

April 2011

Prepared by:

4/12/11

Ronald T. Welch - MSL Project Safety Engineer

Approved by:

Cami Vongsouthy 4/12/11

Cami Vongsouthy - JPL Systems Safety Program Office Manager

4-12-2011

Fred Battle – JPL Lifting Device Manager

4/12/11

Dave Gruel – MSL ATLO Manager

Jet Propulsion Laboratory
California Institute of Technology
Pasadena, California

Information contained in this document may be subject to U.S. export control laws and regulations (22 C.F.R. 120-130) and (15 C.F.R. 730-774). To the extent that information contained within is subject to U.S. export control laws and regulations, the recipient has the responsibility to obtain export licenses or other export authority as may be required before exporting such information to foreign countries or providing access to foreign nationals.

Paper copies of this document may not be current and should not be relied on for official purposes. The current version is in the MSL Project Library at https://charlie-lib.jpl.nasa.gov/docushare/dsweb/View/Collection-1035 in the Controlled Documents and Records folder.

This Page Intentionally Left Blank

DOCUMENT CHANGE LOG

CHANGE NUMBER	DATE	PAGES AFFECTED	CHANGES/ NOTES	GENERAL COMMENTS
001	4/1/2011	All	Preliminary Release	
002	4/23/2011	All	Updated per KSC Comments	

This Page Intentionally Left Blank

Table of Contents

1.0 INTRODUCTION……1

2.0 PURPOSE/APPLICABILITY ……2

3.0 IDENTIFIED SUSPENDED LOAD OPERATIONS……2

3.1 Cruise Stage Handling……2

3.2 Rover Mass Properties……3

4.0 SLOAA Requirements……4

Figures

3.1-1 Lift Cruise Stage from and to Assembly Cart……9

3.1-2 Placement and Removal of Cruise Stage on SCARF……10

3.2-1 Rover Handling Procedure – Mass Properties……11

References

The following documents contain requirements and/or guidelines for the MSL Flight System, payload, ground support equipment and operations and may be referenced in this document.

JPL Documents

D-560	JPL Standard for Systems Safety
JPL ID 27131	MSL Project Safety Plan
JPL ID 10570	Laboratory Safety Policy
JPL D-33464	MSL Missile Systems Prelaunch Safety Package (MSPSP)
ES - 501492	JPL Safety Requirements for Mechanical Support Equipment
MSL-HR-009	Hazard Report for Ground Support (GSE) Failure

NASA

KNPR 8715.3	KSC Safety Practices Procedural Requirements
NASA-STD-5001	Structural Design and Test Factors of Safety for Flight Hardware
NPD 8700.1	NASA Policy for Safety and Mission Success
NPG 8715.3	NASA Safety Manual
NASA-STD 8719.9	NASA Safety Standard for Lifting Devices and Equipment

FEDERAL

Occupational Safety and Health Standards (OSHA) - 29 Code of Federal Regulations (CFR), 1910.179(j) – Materials Handling and Storage, Overhead and Gantry Cranes

MSL SUSPENDED LOAD OPERATIONS
KSC- PHSF

1.0 INTRODUCTION

The Mars Science Laboratory (MSL) Project supports the NASA Office of Space Science plan for the exploration of the Solar System. The MSL mission is a follow-on to a series of prior missions to Mars that have been charged with mapping the topography of the planet, conducting remote sensing and in-situ measurements of the Martian environment.

The MSL Flight System will be delivered to the KSC Payload Hazardous Servicing Facility (PHSF) in the May, 2011 timeframe. Once in the PHSF, the project will begin its final assembly and test operations, fueling, encapsulation into the Atlas V fairing and delivery to the SLC-41 Vertical Integration Facility (VIF) for final launch preparations and launch in the November/December, 2011 timeframe. It is the policy of the National Aeronautics and Space Administration (NASA) and the Jet Propulsion Laboratory that "Mission Success Starts with Safety." As such, all project activities shall be conducted in a manner to achieve this objective.

NASA Standard 8719.9 "Lifting Devices and Equipment" addresses Lifting safety and in Appendix 'A' provides requirements for dealing with unavoidable suspended load issues. An operation is considered a suspended load operation if it meets all three of the following criteria:

1) The operation involves the use of a crane or hoist that supports the weight of a suspended load. (This excludes operations where the load is secured in a holding fixture or on substantial blocks supporting the entire load even though the crane/hoist hook may still be attached.) No distinction is made between a static load and a dynamic load. Rigging, i.e., slings, Hydra-sets, lifting fixtures, shackles, straps, when attached to the hook, is considered part of the load.

2) Personnel involved in the operation have any part of the body directly beneath the suspended load. (This excludes operations where employees have their hands on the sides of a load, i.e., to guide the load.)

3) In the event of a crane/hoist failure, as the load drops it could contact personnel working directly beneath it, with injury or death as a possible result. (This excludes operations where employees have their hands only partially under a load such that a crane or hoist device failure would push their hands out of the way not resulting in injury. This also excludes situations where the falling load would come to rest on hardware that is not suspended before an employee could be injured.)

2.0 PURPOSE/APPLICABILITY

The purpose of this document is to describe those MSL lifting operations which have been identified as suspended load operations. The MSL Project has reviewed all lifting operations that will be conducted during the course of MSL Assembly and Test operations at KSC and CCAFS and have narrowed down the suspended load issues to those lifts identified in this document. Any Suspended load issues that have been missed or misidentified will be addressed real time in accordance with the review and approval guidelines specified in KNPR 8715.3 for procedures and 8719.9 for specific lift operations.

3.0 Identified Suspended Load Operations

3.1 Cruise Stage Handling

During processing of the MSL Cruise Stage (Figure 3.1-1 and 3.1-2) the technician will need to access the center of the Cruise Stage in order to attach the lift hardware (slings and spreader bar) to the four swivel hoist rings located on the inside structure. The purpose of this step is to be able to lift the Cruise Stage off of the Assembly Cart and position on the Spacecraft Assembly and Turnover Fixture (SCARF) and perform these steps in reverse order. This step is brief (approximately 3 minutes) in its completion but at the same time places the technician under the lift assembly. This process will need to be repeated no more than four times.

Note: Prior to the installation of the Solar Arrays, when the CRUISE STAGE is on the Assembly Cart the technician will be able to access the lift rings by crawling into the open bay of the Solar Array mounting structure thus placing themselves outside the suspended load.

An additional step in this procedure will be to remove the Cruise Stage Stiffening Ring from the inside of the Cruise Stage (while on the SCARF). This will also require the technician to be positioned under the lift hardware, for approximately three minutes, to attach the lift slings to the three swivel hoist rings on the Stiffing Ring.

The following lift hardware will be required for the above steps:

- 6K Variable CG Lift Fixture
- Four point Spreader Frame
- 10K Hydra-set
- 10K Hydra-set Ballast
- Cruise Stage Stiffening Ring
- Fabric Lift Slings (for Cruise Stage Ring removal)
- Inverted Cruise Stage Lifting Adapter

Lifted Weight (approx):

- Payload = 1585 #
- Lift Equipment = 2500 #

Procedure: 'Cruise Stage Handling Procedure' (MSL-356-8501)

3.2 Rover Handling Procedure

The Rover Handling Procedure (MSL 356-8301) contains steps that meet the requirements for a Suspended Load. During processing of the MSL Rover (Figure 3.2-1) the technician will need to access the edges of the Rover in order to install and/or remove the three interface bolts as the Rover is mated to and de-mated from the Vibe Plate. The purpose of this step is to be able to lift the Rover onto and off of the Rover Vibration Fixture assembly that is used for shipping the Rover and for the Rover Mass Properties Testing.

The above-described step takes approximately five minutes and places the technician's hands and head under the lift assembly. This process will need to be repeated no more than three times. Because of the height of the Rover interface points, it is necessary to utilize an elevated work platform (Diving Board or Ballymore) in which the technician lies in a prone position in order to access the three interface bolts. The bolts are inserted and removed from the underside (when inverted this is the top) of the Rover and extend through the Rover to the Interface Plate (Vibe Fixture).

The above operation will be repeated three times as follows:

1) Removal of the Rover from the Shipping Container
2) Placement of the Rover on to the Spin (mass properties) Table
3) Removal of the Rover from the Spin Table (Fig 3.2-1)

The following lift hardware will be required for the above steps:

- 6K Variable CG Lift Fixture
- Rover Spreader Frame (P/N 10296452)
- 10K Load Cell
- 10K Hydra-set
- Lift Cable Assembly
- Rover Hoist Clevises, 4 ea. 10254099-1
- Ballymore or MSL Diving Board

Lifted Weight (approx):

- Payload = 2000 #
- Lift Equipment = 1200 #
- Total Lifted Mass = 3200#

Procedure: 'Rover Handling Procedure' (MSL 356-8301)

4.0 Requirements

The following requirements are from the NASA Lifting Standard 8719.9, Appendix A and are addressed individually for the Cruise Stage Handling Procedure:

A.4.1 All suspended load operations will be approved by the Center/facility NASA Director of Safety based upon a detailed engineering hazards analysis of the operation. The hazards analysis will be prepared by the responsible safety organization and coordinated through appropriate engineering and design offices. The analysis documentation will include the following:

a. A justification why the operation cannot be conducted without personnel beneath the load. Feasible procedure/design options will be investigated to determine if the work can be accomplished without personnel working under a load suspended from a crane/hoist.

Cruise Stage:

The MSL Spacecraft is a very large and complicated assembly. Because of the large diameter of the Cruise Stage, it is impossible to safely access the center lift points using ladders, work platforms, mobile lift platforms, etc. The MSL project has investigated all resources but has found nothing feasible to safely address this issue.

Rover:

For the Rover interface to Spin Table (as well as removing the Rover from the shipping container) the lift fixture must be in place and holding the load for the safe installation and removal of the interface plate bolts. The only safe way to access these bolts is by the technician laying prone on the elevated work platform (Ballymore) and placing their hands and head under the Rover Spreader Frame. Wood blocking has been used in the past, but it was found to be in the way of the wrench handle swing and thus became more of an issue.

b. Details of the precautions taken to protect personnel should the load drop. Secondary support systems, i.e., equipment designed to assume support of (catch) the load preventing injury to personnel should the crane/hoist fail, shall be evaluated and used whenever feasible. Secondary support systems will be constructed with a minimum safety factor of 2 to yield.

The MSL Project has investigated other load abatement methods for the Cruise Stage lift and Rover lift but was unable to produce a feasible option for either. A rigid system such as blocking would have to rest on the Cruise Stage or Rover structure or on the Solar Arrays when the Cruise Stage has been rotated. Blocking placed on any of these elements would result in excessive load and risk of damage to flight hardware. A mobile fall protection system that would protect the technician from potential impact could not be configured in such a way as to avoid contacting the lift slings and affecting the capability of the variable CG lift fixture for both the Cruise Stage and Rover lifts.

c. The maximum number of exposed personnel allowed. Steps shall be taken to limit the number of personnel working under a load suspended from a crane/hoist. Only those essential personnel absolutely necessary to perform the operation will be allowed to work in the safety controlled area.

The steps involved in this lift will only be accomplished by a single individual located on the inside of the Cruise Stage and a single person on the work platform for the Rover application.

d. The time of exposure. Steps shall be taken to ensure that personnel do not remain under the load any longer than necessary to complete the work.

The time of technician's exposure to the suspended load will be minimized to assure that the connections are made safely but at the same time their exposure is no longer than necessary. Based on similar Cruise Stage lift operations, the exposure time should be no longer than three minutes for each of the below listed Cruise Stage operations for a total of 12 minutes. Based on similar Rover lift operations, the exposure time should be no longer than five minutes for each of the below listed Rover operations for a total of 15 minutes.

A.4.2 Each operation will be reviewed on a case-by-case basis.

JPL as well as KSC Safety will witness each lift of the Cruise Stage and Rover utilizing this SLOAA in accordance with detailed handling procedures (see above).

The following individual lift operations will utilize this SLOAA:

<u>Cruise Stage Suspended Load Operations:</u>

1) Movement of the Cruise Stage from the SCARF to the Assembly Cart after initial rotation. This will place the Cruise Stage in the proper orientation for Solar Array installation. (3 min max exposure)
2) Movement of the Cruise Stage (Solar Arrays installed) to the SCARF for rotation. (3 min max exposure)
3) Movement of the Cruise Stage from the SCARF back to the Assembly Cart for testing. (3 min max exposure)
4) Movement of the Cruise Stage from the Assembly Cart to the SCARF for rotation in preparation for integration. (3 min max exposure)

Note: Repeat of any of the above may be required for unplanned testing, modifications or repair.

<u>Rover Suspended Load Operations:</u>

1) Removal of the Rover from the Shipping Container (5 min max exposure)
2) Placement of the Rover on to the Spin (mass properties) Table (5 min max exposure)

3) Removal of the Rover from the Spin Table (Fig 3.2-1) – 5 min max exposure

A.4.3 Only those suspended load operations approved by the Center/facility NASA Director of Safety will be permitted, subject to this standard. A list of approved suspended load operations will be maintained by NASA Safety and made available to OSHA personnel upon request.

This document satisfies the above requirement and will be filed with the KSC Safety Office and is available on-line at http://ksc-lde.ndc.nasa.gov/. The SLOAA will also be referenced in the text of the Cruise Stage and Rover Handling Procedures.

A.4.4 The operational procedures document (e.g., Operations and Maintenance Instruction, Technical Operating Procedure, Work Authorization Document) will be revised to specify the necessary additional requirements identified by the hazard analysis discussed in paragraph A.4.1. The procedures will be available on site for inspection during the operation.

The Cruise Stage (MSL-356-8501) and Rover (MSL-356-8301) Handling Procedure(s) will be available for review prior to utilization of the lifts in question as well as on the floor during the lift. The details of this lift will be discussed at the morning Safety Briefing prior to the start of the day's activities.

A.4.5 During a suspended load operation, if a new procedure not covered by the original analysis is deemed necessary due to unusual or unforeseen circumstances, the NASA Center/facility Safety Office will be consulted and must approve and document the procedure before operations continue. Safety will coordinate with Operations, Engineering, and other organizations as appropriate. If the new procedure is to be performed on a regular basis, a detailed hazards analysis and approval as outlined in paragraph A.4.1 are required.

The MSL lifting operations, that will be conducted in the PHSF have been reviewed by the KSC Lifting Device and Equipment Manager. Based on this review, it was determined that the two procedures identified within the scope of this SLOAA were the only ones of concern.

A.4.6 The crane/hoist shall be designed, tested, inspected, maintained, and operated in accordance with the NASA Standard for Lifting Devices and Equipment (NASA-STD-8719.9). Test, inspection, and maintenance procedures will be developed and approved by qualified, responsible NASA engineers. Qualified specialists will perform the procedures and resolve noted discrepancies. NASA Quality Assurance will perform an independent annual inspection of all cranes/hoists involved in suspended load operations. The results of the annual inspections will be maintained and made available to OSHA personnel upon request.

The two cranes in the PHSF High Bay have undergone inspection and proof testing and will be in current certification at the time of the operations. The two cranes have been designed, maintained, inspected and tested in accordance with NASA STD 8719.9.

A.4.7 Each crane/hoist involved in suspended load operations shall undergo a Failure Modes and Effects Analysis (FMEA) that shall be approved by the Center/facility NASA Director of Safety. The FMEA will determine Single Failure Points (SFP), assessing all critical mechanical functional components and support systems in the drive trains and critical electrical components.

The PHSF cranes have been analyzed for Single Point Failure modes (SPF). Document SAA01HS11-005 and SAA01HS11-003 respectively, include a Failure Modes and Effects Analysis, Critical Items List and a hazard analysis. There are no Single Point Failure modes in either of the PHSF HB cranes that would result in dropping the load. Passive components such as rope, drum, wire rope and hook are verified through preventive maintenance. Total lifted mass for the Cruise Stage lift is approximately 4085 Lbs, which is well within the 50 ton rated capacity of each crane.

A.4.8 Before lifting the load involved in a suspended load operation, the crane/hoist will undergo a visual inspection (without major disassembly) of components instrumental in assuring that the load will not be dropped (e.g., primary and secondary brake systems, hydraulics, mechanical linkages, and wire rope per NASA-STD-8719.9). Noted discrepancies will be resolved before the operation continues. This pre-lift inspection will be in addition to the inspections required in 29 CFR, 1910.179(j).

Prior to start of daily operations in PHSF, the overhead cranes will be inspected and run through all directions to assure proper operation and functionality of the fail safe devices. Any noted discrepancies will be resolved before operations commence for the day. This pre-lift inspection will be in addition to the inspections required in 1910.179(j).

A.4.9 A trained and licensed operator (certified per NASA-STD-8719.9) shall remain at the crane/hoist controls while personnel are under the load.

JPL Crane operators will be trained in accordance with NASA-STD-8719.9 and JPL Standard Crane Operations Training. In addition, each operator will have undergone hands-on specific training on the PHSF High Bay Cranes as well as the PHSF Air Lock crane. The training will be overseen and conducted by a NASA/KSC Certified Crane Operator licensed and certified for the PHSF cranes. Crane operator will remain at the crane controls when personnel are under the suspended load. Per JPL requirements, a person shall remain at the crane dead-man switch at all times when critical hardware is on the hook as well as when anyone is under a suspended load.

A.4.10 Safety controlled areas shall be established with appropriate barriers (rope, cones, etc.). All nonessential personnel shall be required to remain behind the barriers.

Non-essential personnel will be kept clear of the lift operation as noted in the procedure. A controlled area will be established for all crane operations in the PHSF. Appropriate barriers will be set-up prior to start of lift and removed only when lift has been completed. A detailed discussion of the controlled area will be conducted at the pre-lift briefing to assure all participants are familiar with the defined boundary.

A.4.11 Prior to the suspended load operation, a meeting with the crane/hoist operator(s), signal person(s), person(s) who will work under the load, and the person responsible for the task shall be held to plan and review the approved operational procedures that will be followed, including procedures for entering and leaving the safety controlled area.

At the pre-lift briefing (as described in 4.10) a detailed discussion will be conducted to go over the suspended load steps and precautionary measures. The meeting will include the crane operator, lift lead, JPL Safety Engineer, KSC Safety, JPL Quality Assurance Engineer, lift technicians and any other authorized parties. The Suspended Load Operation will also be discussed at the morning briefing and the details of the procedure addressed.

A.4.12 Communications (voice, radio, hard wired, or visual) between the operator(s), signal person(s), and the person(s) working under the load shall be maintained. Upon communication loss, operations shall stop immediately, personnel shall clear the hazardous area, and the load shall be safed. Operations shall not continue until communications are restored.

Communication and direct visual contact will be maintained at all times between the crane operator and lift lead as well as between the crane operator and the technician under the suspended load. Upon visual or communication loss the lift will be halted immediately and persons under the suspended load will move to a safe area outside the envelope of the suspended load until the line of sight and/or communication can be re-established. All lifts in the PHSF, including the suspended load lifts in question, will be conducted with direct voice communication w/o the use of communication devices.

A.4.13 Personnel working beneath the load shall remain in continuous sight of the operator(s) and/or the signal person(s). See above response

A.4.14 NASA shall conduct periodic reviews to ensure the continued safety of the procedures. As a minimum, NASA will annually evaluate the implementation of this procedure at each Center with operations on the suspended load list.

All hazardous procedures, including suspended load operations, will be reviewed in accordance with the standard TOPs review process as described in KNPR 8715.3. The appropriate NASA/KSC Safety organizations will review and approve all hazardous procedures well in advance of the commencement of the operation with at least seven days lead time after approval.

A.4.15 A list of approved suspended load operations, list of cranes/hoists used for suspended load operations, and copies of the associated hazards analyses will be provided to the OSHA Office of Federal Agency Programs via NASA Headquarters for distribution to the appropriate regional and area OSHA offices. (NASA Headquarters, in conjunction with OSHA, will develop a format for transmittal of this information.) Quarterly updates to the documentation will be provided as needed.

Figure 3.1-1 Lift Cruise Stage from and to Assembly Cart

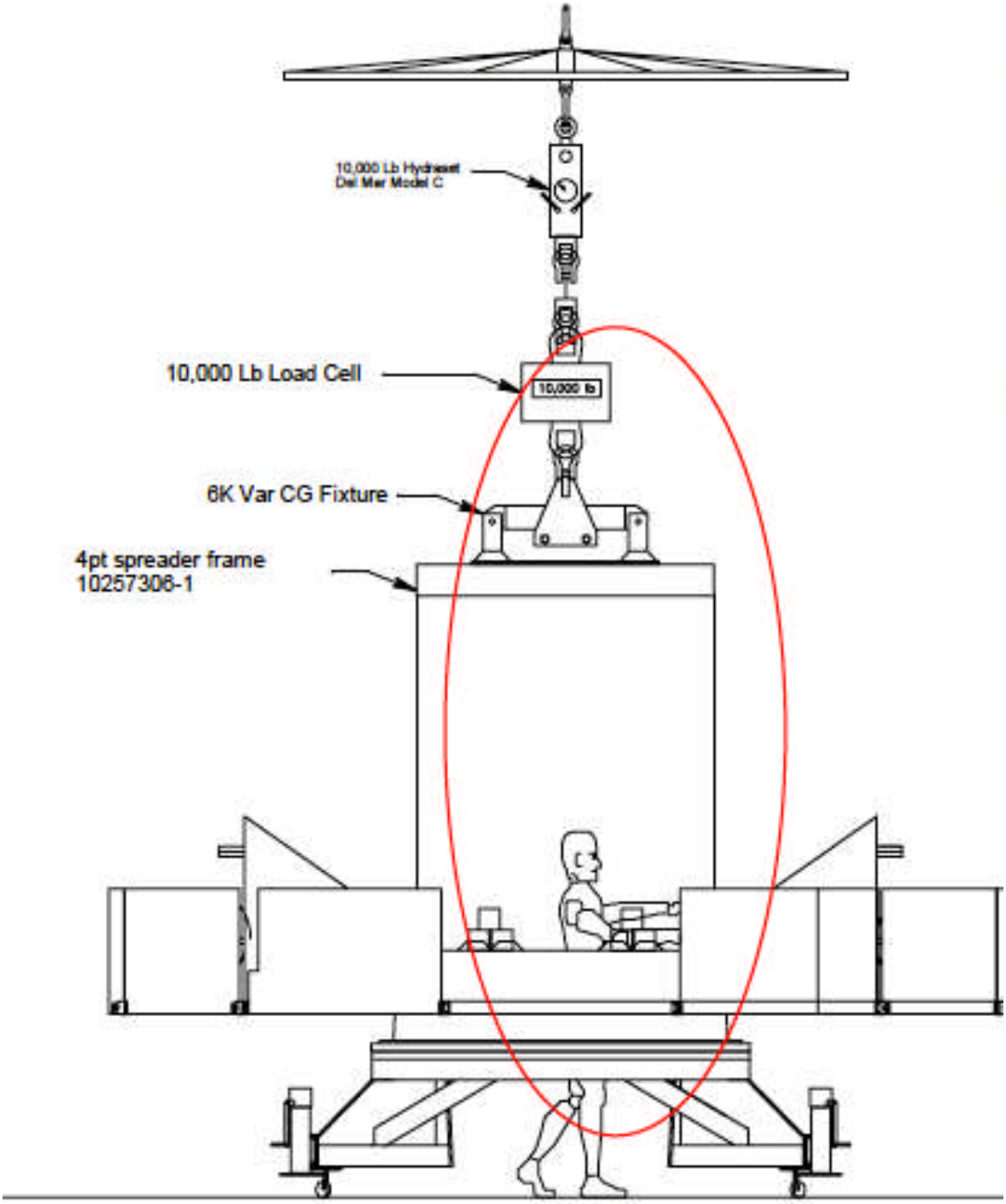

Figure 3.1-2 Placement and Removal of Cruise Stage on SCARF

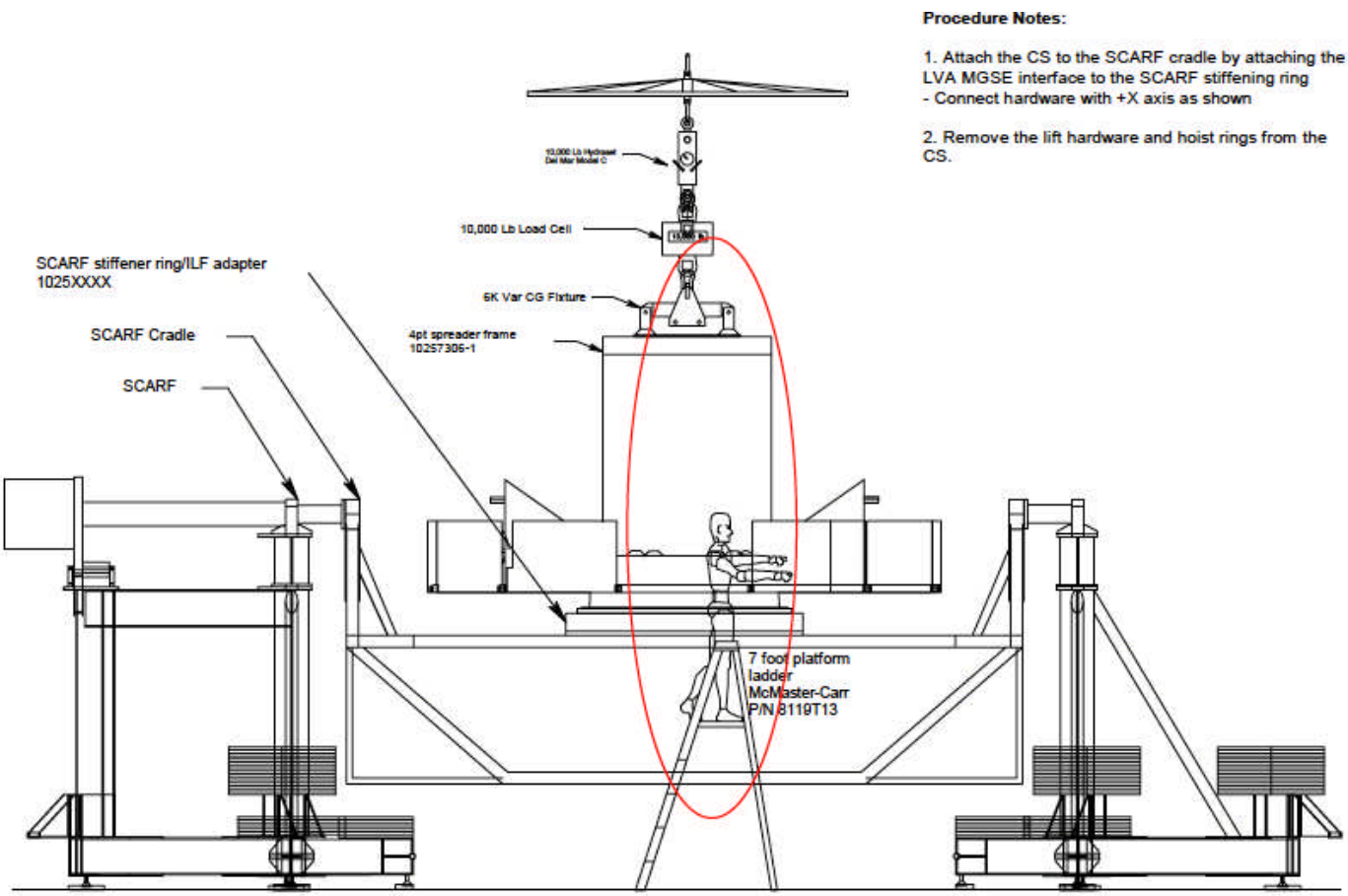

Figure 3.2-1 Rover Handling Procedure - Mass Properties

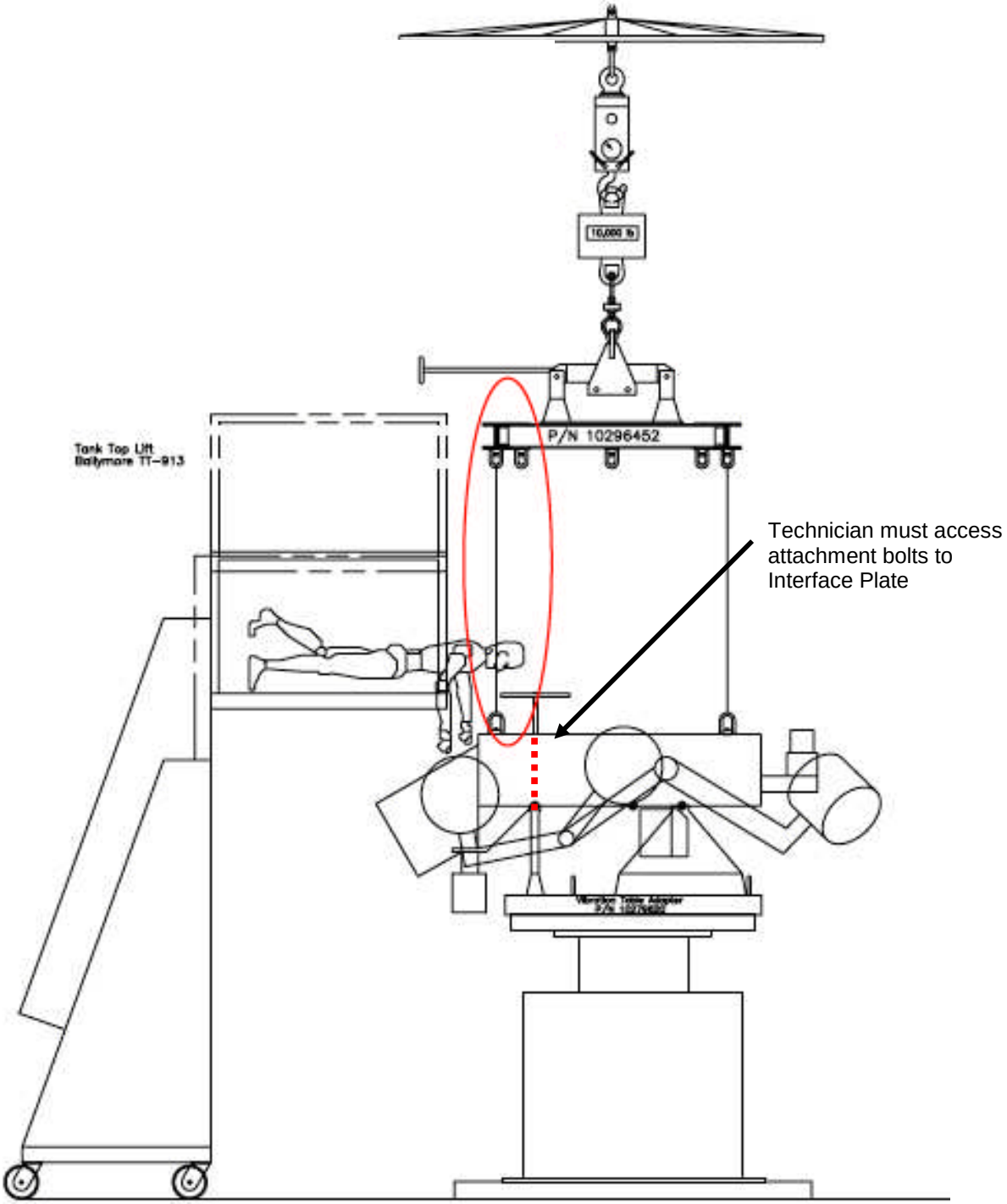

Signature Sheet:

Richard Boutin: Date: 5/6/2011

Chief, Launch Services Division Safety and Mission Assurance