APPROVAL SHEET FOR SUSPENDED LOAD OPERATIONS

SLO-KSC - 2010-003

TITLE: NASA Suspended Load Operation Analysis and Approval (SLOAA) for Robonaut Online Operation

DOCUMENT NUMBER/TITLE:

PREPARED BY: Michael Haddock/NE-M3 DATE: 8-2-10

CHECK APPROPRIATE BOX:

☐ Single Occurrence Operation ☐ Multiple Occurrence Operation ☒ Revision to Existing SLOAA

IF REVISION TO EXISTING SLOAA, SUMMARIZE CHANGES / RATIONALE:

Review and approval by Boeing.

REQUIRED APPROVAL

CONTRACTOR _____ DESIGN _____ R & QA _____ OPERATIONS _____ SAFETY

NASA _____ DESIGN _____ R & QA _____ OPERATIONS _____ SAFETY

TYPE OR PRINT NAME	SIGNATURE	ORG.	DATE
William D Jones III	William D Jones	Boeing	8-13-10
Jim Burnett	Jim Burnett	Boeing	8-13-10
Joe Degaud SARAH C PATTERSON for	Sarah C Patterson	BOEING	8-13-10
Maynette E. Smith	Maynette E Smith	NASA SA-C	8-13-10

CONTRACTOR DIRECTOR OF SAFETY

Sarah C Patterson 8/13/10

Sarah Patterson/Boeing/S&MA Director

KSC FORM 20-200 NS (REV. 07/09) PREVIOUS EDITIONS ARE OBSOLETE

APPROVAL SHEET FOR SUSPENDED LOAD OPERATIONS

SLO-KSC-2010-003

TITLE: NASA Suspended Load Operation Analysis and Approval (SLOAA) for Robonaut Online Operation

DOCUMENT NUMBER/TITLE:

PREPARED BY: Michael Haddock / NE-M3 DATE: 8-2-10

CHECK APPROPRIATE BOX:

[X] Single Occurrence Operation [ ] Multiple Occurrence Operation [ ] Revision to Existing SLOAA

IF REVISION TO EXISTING SLOAA, SUMMARIZE CHANGES / RATIONALE:

N/A

REQUIRED APPROVAL

CONTRACTOR _____ DESIGN _____ R & QA _____ OPERATIONS _____ SAFETY

NASA _____ DESIGN _____ R & QA _____ OPERATIONS _____ SAFETY

TYPE OR PRINT NAME	SIGNATURE	ORG.	DATE
Tim Aramil	Timothy Aramil	Wyle / BC S&MA	8/2/10
Gina Young	Gina Young	Wyle / BC Prj Mgr	8/2/10
Ben Greene	Ben Greene	NASA / EC7	8/2/10
JOE TO RSAVI		LDEM	4 Aug 10
Maynette Smith	Maynette E. Smith	NASA-KSC SA-C	8/4/10

CONTRACTOR DIRECTOR OF SAFETY

(for)

Dan Butler / Bioastronautics Contract (BC) S&MA Section Manager

KSC FORM 20-200 NS (REV. 07/09) PREVIOUS EDITIONS ARE OBSOLETE

NASA Suspended Load Operation Analysis and Approval (SLOAA) for Robonaut Online Operation

Suspended Load Operation: Hoist Robonaut from ground stanchion and transfer to Flight Support Equipment (FSE) bottom panel (See Figure 1).

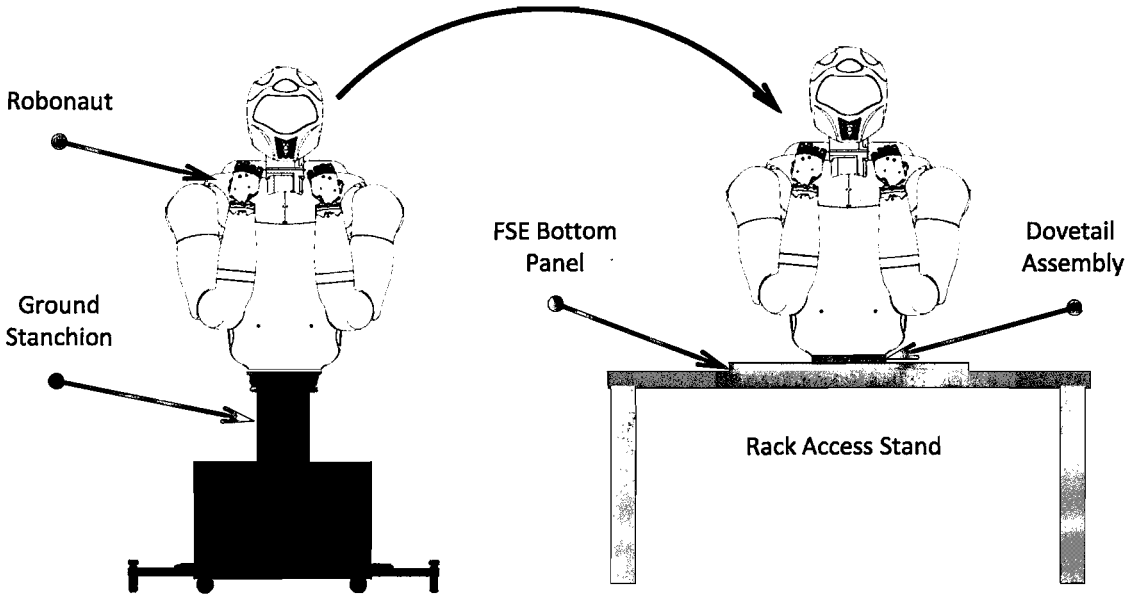

Figure 1: Robonaut transfer from ground stanchion to FSE bottom panel

Operations:

1. Crane rigging from Robonaut to the SSPF overhead crane will be configured as shown in Figure 2.

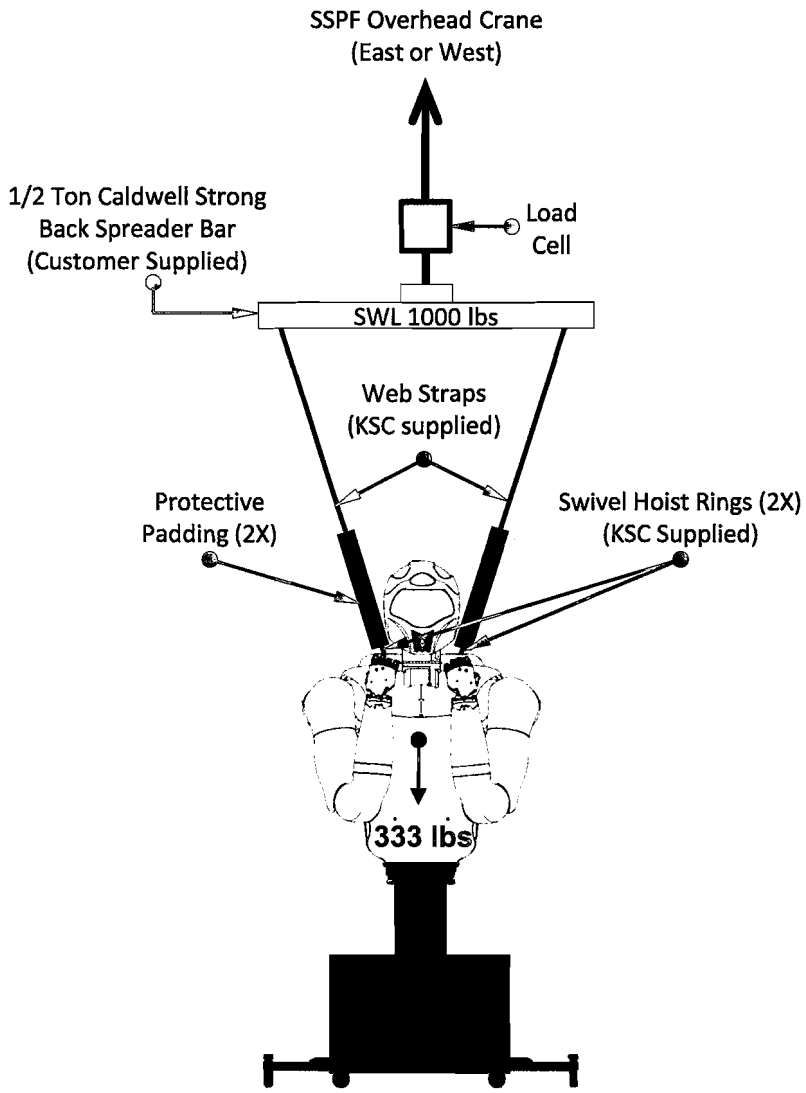

Figure 2: Crane rigging detail for Robonaut

Operations: (continued)

2. Before Robonaut can be lifted from its ground stanchion, two fasteners and a restraint bar on the forward edge of the stanchion must be removed (See Figure 3). Before the fasteners are loosened, the overhead crane will raise and preload the rigging as shown in Figure 4 (reference Attachment A for preload calculation). Preloading the rigging will ensure Robonaut is stable and poses no falling hazard when the stanchion fasteners and restraint bar are removed. As defined in Section A.3 of NASA -STD-8719.9, Operator 1 is not under a suspended load while loosening and removing the fasteners and restraint bar.

Figure 3: Stanchion fasteners/ restraint bar removal

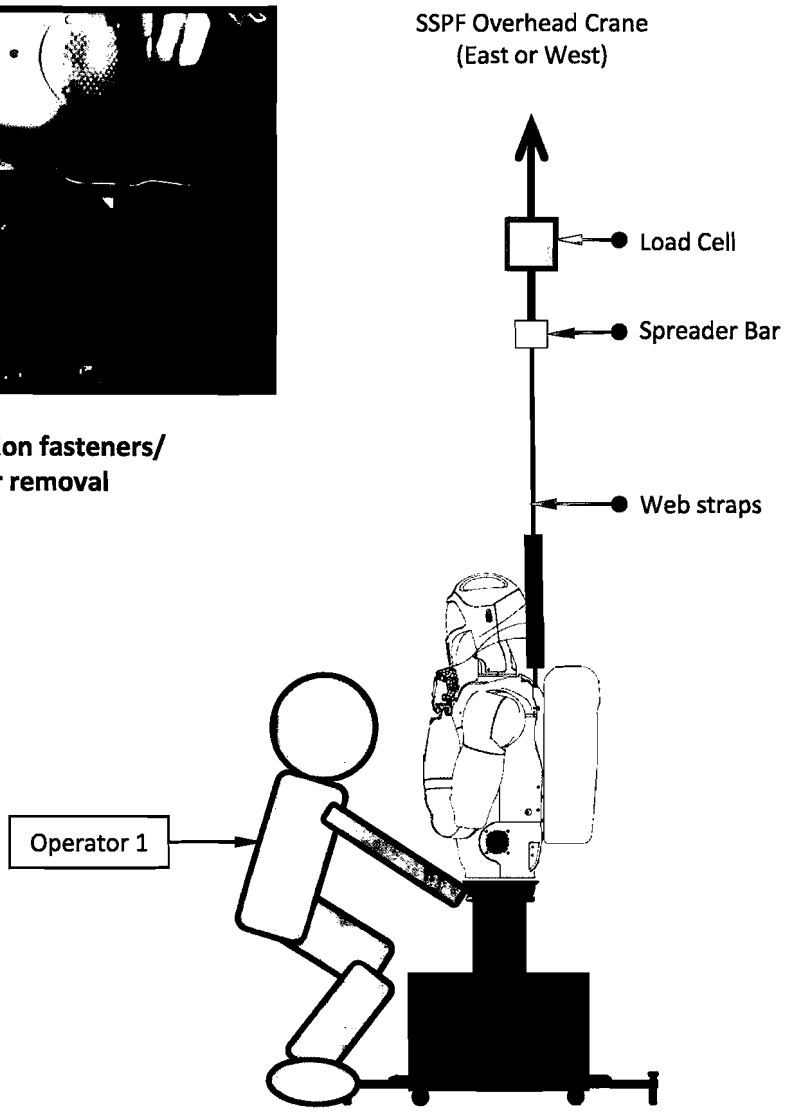

Figure 4: Pre-lifting configuration with rigging preloaded

Operations: (continued)

3. Once the two fasteners and restraint bar are removed from the ground stanchion, the overhead crane slowly assumes the full load of Robonaut to initiate the lift from the ground stanchion. Two operators will guide the load as it is raised from the ground stanchion. As the crane assumes the load, Robonaut will slowly pitch forward due to the initial offset between the Robonaut CG and the hoist points on the shoulders (reference Attachment B for Robonaut CG location). Crane movement in micro mode and guidance by Operators 1 & 2 will allow the forward pitch to take place in a controlled fashion. As defined in Section A.3.2 of NASA -STD-8719.9, Operators 1 and 2 are not under the suspended load when guiding it from the sides by hand (See Figure 5).

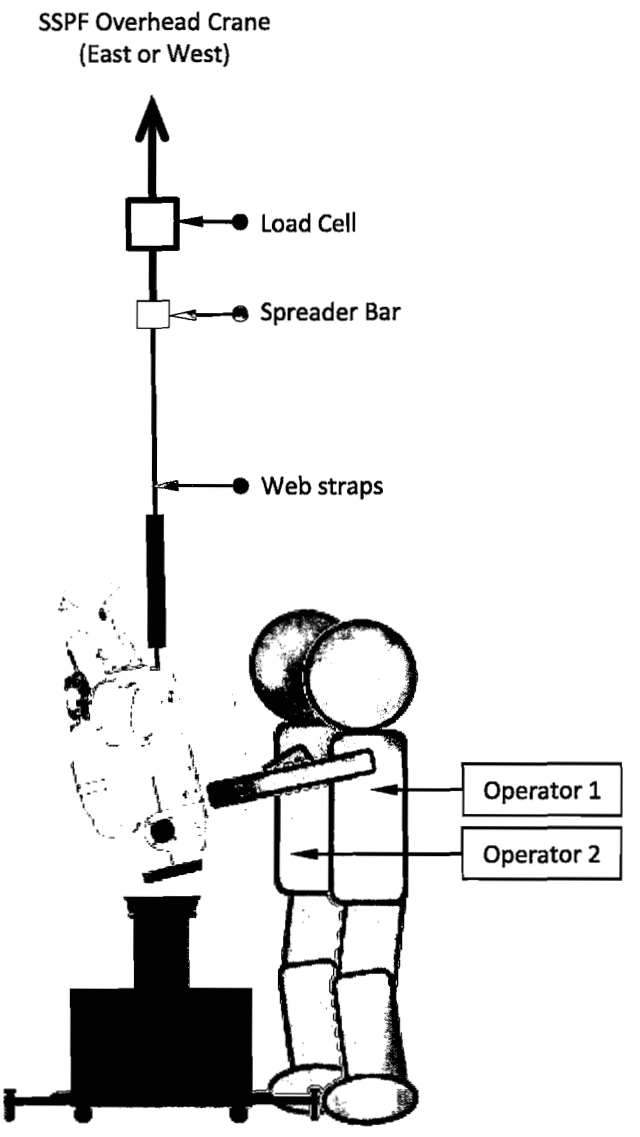

Figure 5: Robonaut lifted from ground stanchion

Operations: (continued)

4. After Robonaut clears the ground stanchion, the SSPF overhead crane will transfer Robonaut to the Rack Access Stand where the Robonaut Flight Support Equipment (FSE) bottom panel and dovetail assembly are prepositioned. No operators are required in proximity to the suspended load for Robonaut's translation to the Rack Access Stand (See Figure 6).

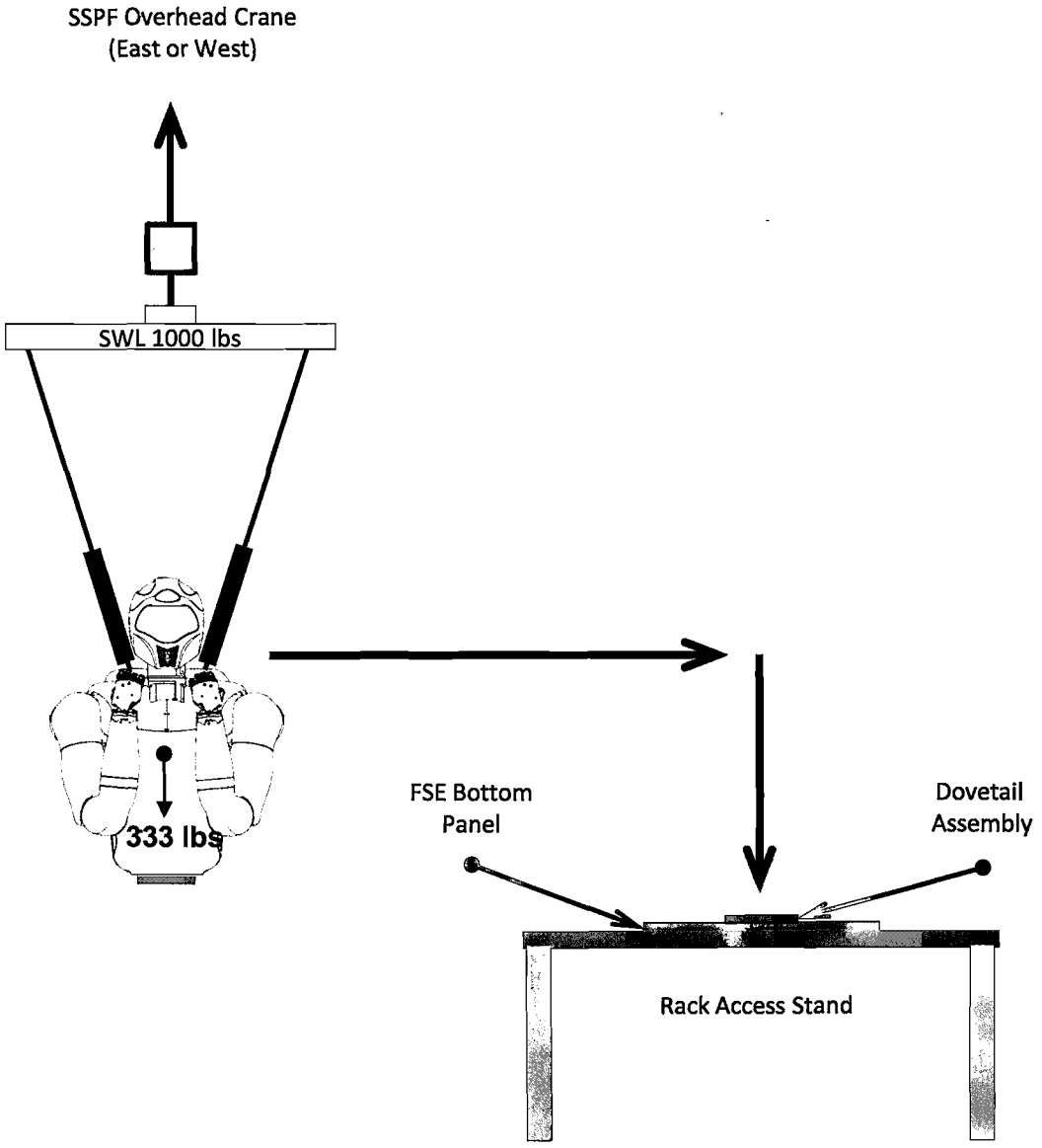

Figure 6: Robonaut transfer to Rack Access Stand

Operations: (continued)

5. The SSPF Overhead Crane lowers Robonaut into position directly above the FSE bottom panel and dovetail assembly (See Figure 7). The crane lowers Robonaut while Operators 1 & 2 simultaneously guide the dovetail leading edge on Robonaut into the dovetail assembly on the FSE bottom panel. After initial contact is made with the dovetail assembly, Robonaut will slowly rotate from the forward-pitched orientation to the vertical orientation. As defined in Section A.3.2 of NASA -STD-8719.9, Operators 1 and 2 are not under the suspended load when guiding it from the sides by hand (See Figure 7).

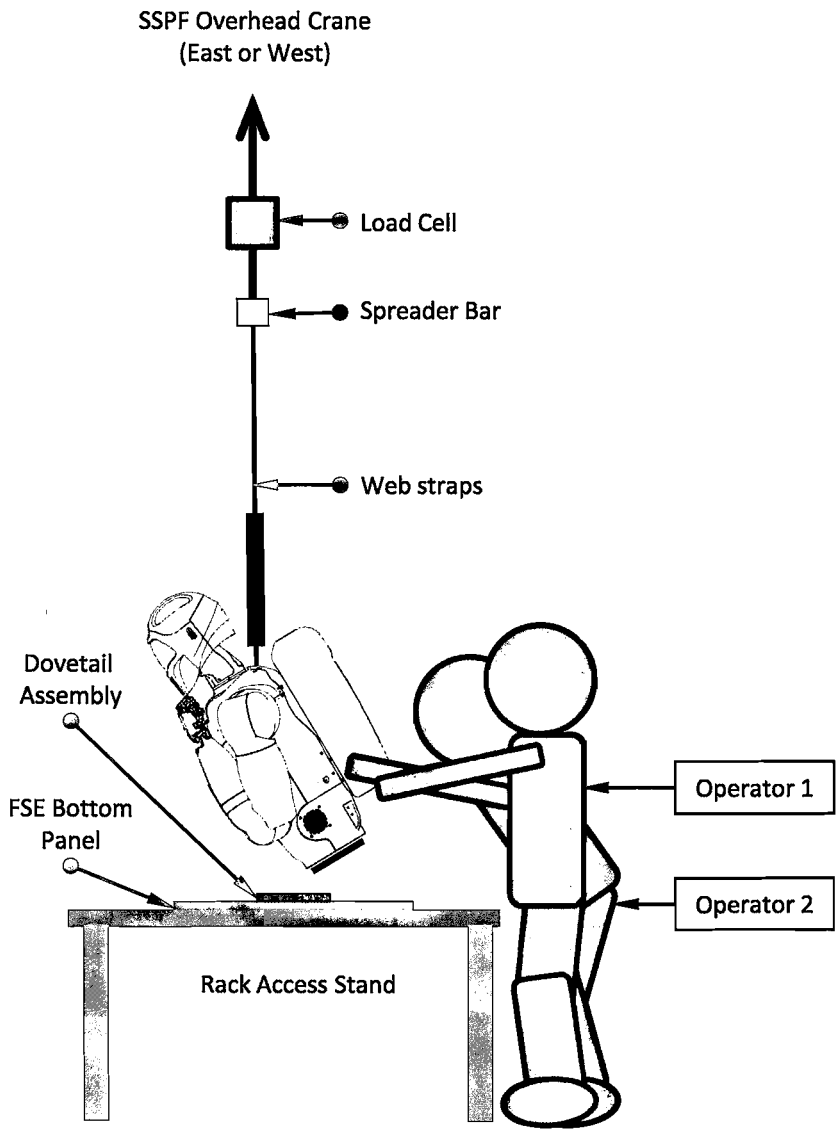

Figure 7: Robonaut installation onto FSE Bottom Panel

Operations: (continued)

6. Robonaut is now vertical and resting in static equilibrium in the dovetail assembly. The SSPF overhead crane rigging remains installed and is taut at this point to protect against inadvertent tip over. Operator 1 will fasten the sliding dovetail bracket to the fixed dovetail bracket to rigidly affix Robonaut to the FSE Bottom Panel. The operator is not directly beneath the suspended load during the installation of the sliding dovetail bracket (See Figure 8).

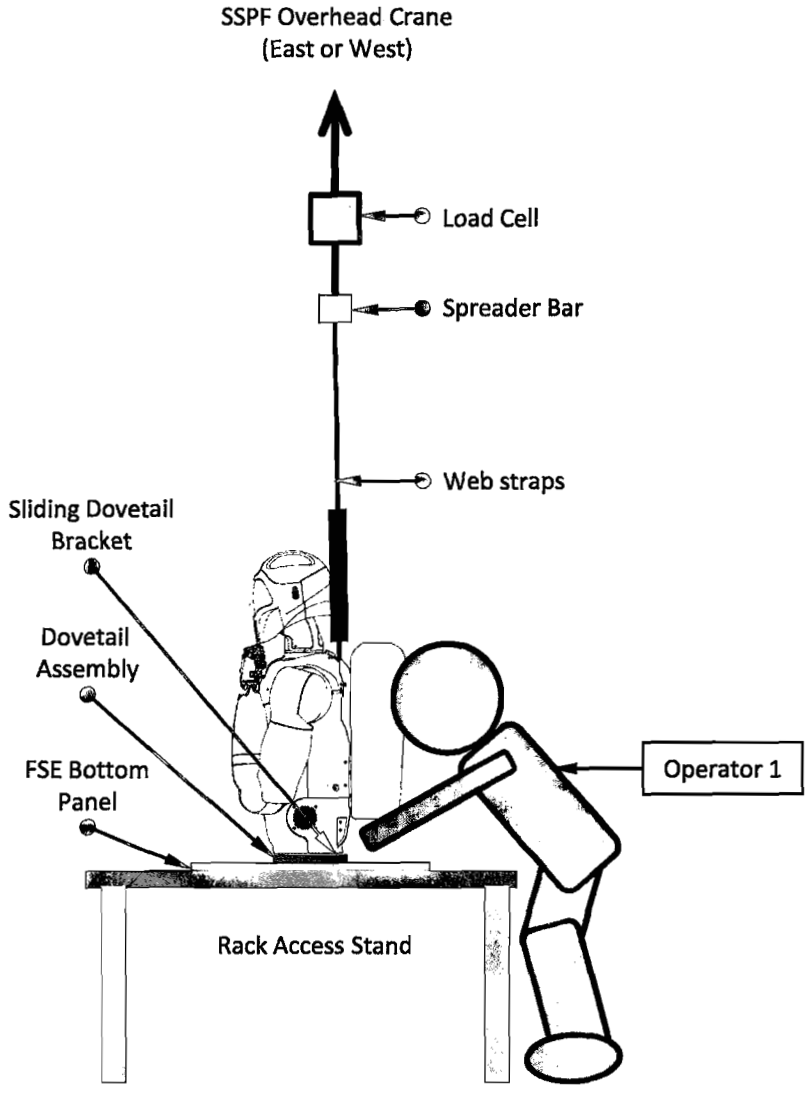

Figure 8: Fastening Robonaut to Dovetail Assembly

Operations: (continued)

7. With Robonaut installed on the FSE bottom panel, the rigging can be disconnected. The crane will be lowered slightly to provide slack in the web straps . Operator 1 will then disconnect the web straps from Robonaut's swivel hoist rings on the right and left shoulders. Operator 1 will not be directly below the suspended rigging (See Figure 9).

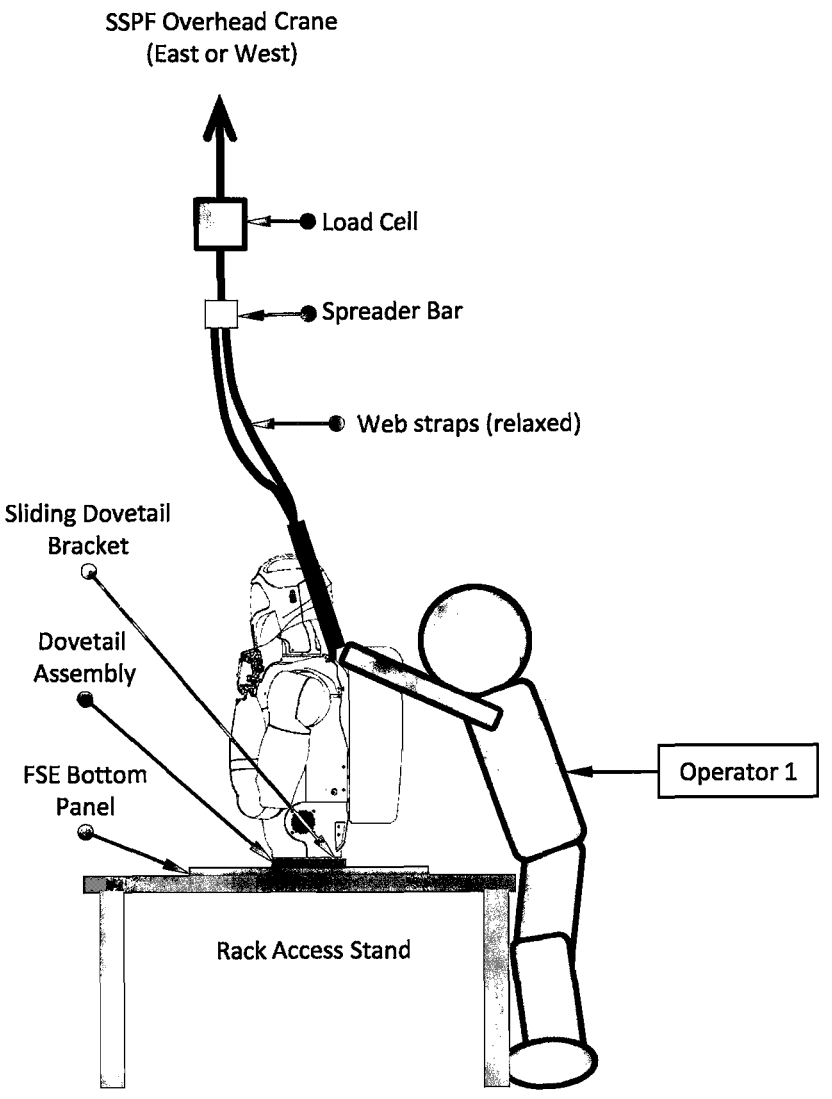

Figure 9: Disconnecting web straps

Operations: (continued)

8. Once the crane rigging is disconnected from Robonaut 's shoulders, the crane will lower the spreader bar and attached web straps to the ground. The spreader bar will then be removed from the hook to complete all suspended load operations. No operators will be required to perform work beneath the suspended rigging (See Figure 10).

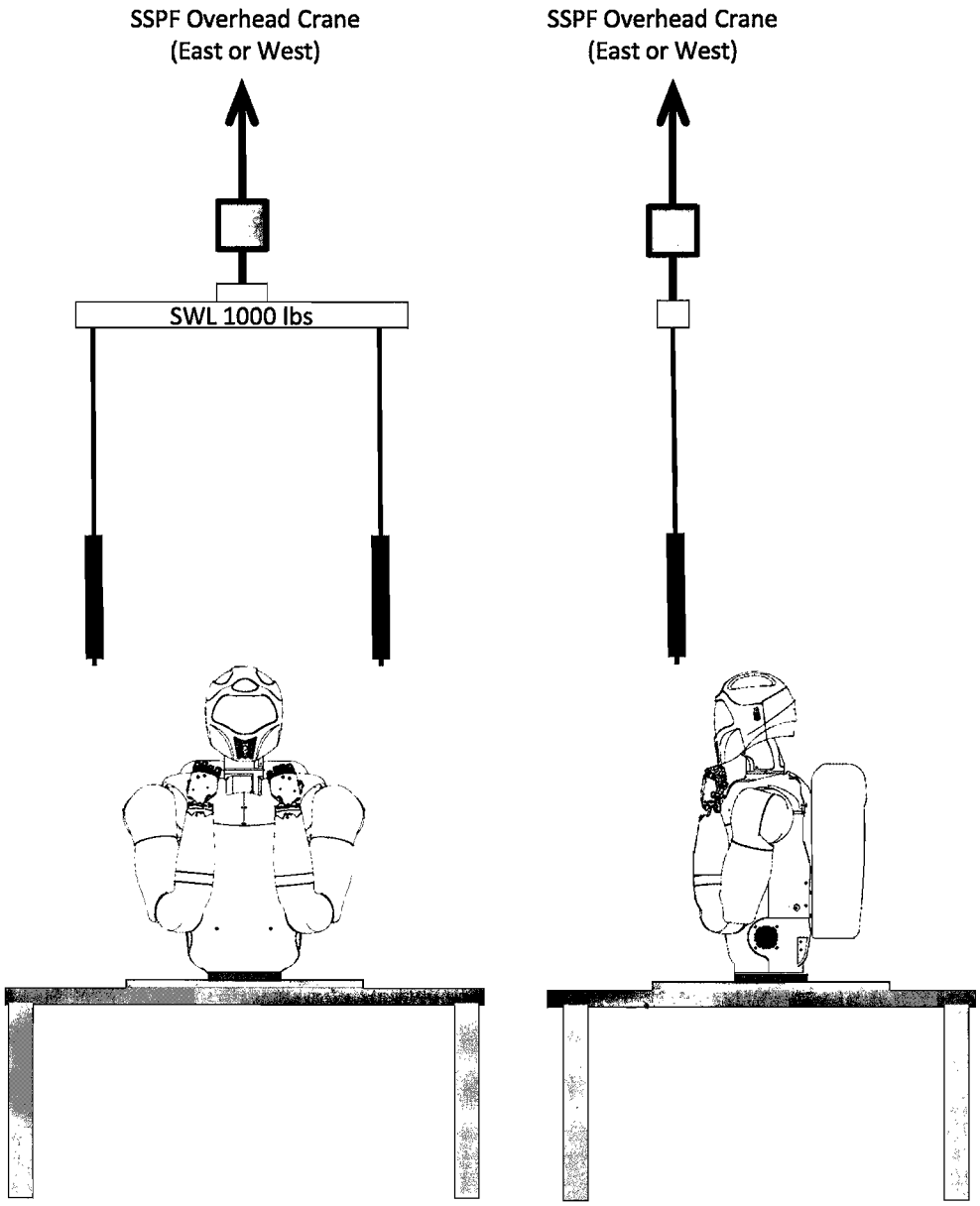

Figure 10: Hoisting operations complete

Rationale / Analysis

The suspended load tasks described herein comply with the NASA Alternate Safety Standard for Suspended Load Operations as follows (as defined in NASA-STD-8719.9, Section A.4):

A.4.1a:

The operations described in this SLOAA require operators to work within close proximity to the suspended load, but none require operators to work directly beneath the suspended load. Reference the operations illustrated in Figures 3, 4, 5, 7, 8 & 9 as they clearly depict operators doing work around Robonaut, but none require work directly beneath Robonaut. Although work under the suspended load is not anticipated, this SLOAA is being processed due to the potential for personnel to be under the spreader bar momentarily during manipulation of Robonaut. There are no design, procedural, or operational means to eliminate the work in close proximity to the suspended load as shown in this SLOAA.

A.4.1b:

The working location of each operator has deliberately been selected to prevent injury to personnel should the load drop. For example, operators shown in Figures 5 & 7 are positioned behind Robonaut. Should Robonaut drop, it would fall away from the operators due to its forward pitch and CG location relative to the point of impact (reference Attachment B for Robonaut CG location). The operators shown in Figures 8 & 9 are working around Robonaut with the load fully supported by the Rack Access Stand. Risk to the operator(s) would therefore be limited to sole failure of the crane rigging at which time it is not bearing a suspended load. For the operation shown in Figure 4, the operator risk is also limited to a failure of the crane rigging at a time when it is not bearing a suspended load. Robonaut is resting on its ground stanchion during the operation and remains a captured load until the operator has removed the front restraint bar. Risk to the operator is minimal as Robonaut is completely supported by the ground stanchion and the operator is not beneath the crane rigging at any point in the operation.

The use of a secondary support system is not considered necessary for the operations outlined in this SLOAA as 1) no operators will be working directly beneath the suspended load of Robonaut and 2) Robonaut poses no risk to operators should the load drop.

With the exception of the customer provided spreader bar assembly, all rigging utilized for the lift described herein consists of KSC provided lifting hardware from the SSPF instrument library. Details of the customer provided spreader bar assembly are included in the Robonaut Ground Safety Data Package (JSC 47303, Table 5.1). For Non-Destructive Inspection (NDI) details of the spreader bar assembly, reference JSC Lifting Beam NDT Report on Process Control No. 1007-001 / Work Order No. Fab Express Track #218.

A.4.1c:
The maximum number of personnel allowed in proximity to Robonaut during Robonaut's transfer to the Flight Support Equipment (FSE) bottom panel is as follows:

Per Figure 4, the maximum number of personnel required to disconnect the front restraint bar on the Robonaut ground stanchion will be limited to 1. Note that Robonaut is fully supported by the ground stanchion and the crane rigging is taut to further preclude Robonaut from falling.

Per Figures 5 & 7, the maximum number of personnel required to handle Robonaut will be limited to 2. Two personnel are required to maneuver Robonaut from its ground stanchion and align Robonaut to the dovetail assembly on the FSE bottom panel.

Per Figures 9 & 10, the maximum number of personnel required to fasten the dovetail assembly and remove the web straps is limited to 1. Both operations are performed with Robonaut supported by the Rack Access Stand.

A.4.1d:
The time of exposure for all personnel working in proximity to the suspended loads will be minimized. Times of exposure are estimated as follows:

Removal of the front restraint bar from the ground stanchion < 5 minutes (See Figures 3 &4)
Guiding Robonaut during lift from ground stanchion < 5 minutes (See Figure 5)
Aligning Robonaut to dovetail assembly on FSE bottom panel < 5 minutes (See Figure 7)
Fastening Robonaut to dovetail assembly on FSE bottom panel < 10 minutes (See Figure 8)
Disconnecting web straps from Robonaut < 2 minutes (See Figure 9)

A.4.2:
Each operation in this SLOAA will be reviewed on a case-by-case basis.

A.4.3:
Only those suspended load operations approved by the Center/facility NASA Director of Safety will be permitted, subject to NASA-STD-8719.9. A list of approved suspended load operations will be maintained by NASA Safety and made available to OSHA personnel upon request.

A.4.4:
The work authorizing documents (OMI E5533 and TAP P13304) for the operations described in this SLOAA will be quality controlled to allow only required personnel in proximity to suspended load operations. Both the OMI and TAP will be available on site for inspection during the operation.

A.4.5:
During a suspended load operation, if a new procedure not covered by the original analysis is deemed necessary due to unusual or unforeseen circumstances, the NASA Center/facility Safety Office will be consulted and must approve and document the procedure before operations continue. Safety will coordinate with Operations, Engineering, and other organizations as appropriate. If the new procedure is to be performed on a regular basis, a detailed hazards analysis and approval as outlined in paragraph A.4.1 are required.

A.4.6:
The crane used to hoist the Robonaut is provided by KSC and is designed, tested, inspected, maintained, and operated in accordance with the NASA Standard for Lifting Devices and Equipment, NASA-STD-8719.9. The crane used will be one of the SSPF 30 Ton Bridge Cranes. Both SSPF east and west overhead cranes are on the approved list for suspended loads with System Assurance Analysis (SAA) #SAA21CRS1-001.

A.4.7:
The crane used to hoist the Robonaut is provided by KSC as identified in A.4.6 above. The Failure Modes and Effects Analysis (FMEA) and hazard analysis specific to this crane are documented in SAA #SAA21CRS1-001. All cranes and rigging equipment are tested, inspected, and maintained in accordance with NASA-STD-8719.9.

A.4.8:
In accordance with NASA-STD-8719.9, visual inspections for cracks or damage will be performed on the hoist rings, spreader bar assembly, web straps and shackles. Crane functional checks and visual inspections will also be performed before each operation. Note that NDI was completed on the customer-provided Commercial Off-The-Shelf (COTS) spreader bar assembly. Reference JSC Lifting Beam NDT Report on Process Control No. 1007-001 / Work Order No. Fab Express Track #218. The spreader bar assembly has a rated load of 1000 lbs with a proof load of 2000 lbs. The KSC-supplied GSE shoulder hoist rings are Carr Lane P/N CL-1000-SHR-1 Swivel Hoist Rings each rated to 1000 lbs with an initial proof load of 2000 lbs (200%) and Periodic Load Tests (PLT) of 1250 lbs each. The actual load of Robonaut will be 333 lbs to be split among the 2 hoist rings.

A.4.9:
A trained and licensed operator (certified per NASA-STD-8719.9) shall remain at the crane/hoist controls while personnel are under the load.

A.4.10:
As documented in OMI E5533 (Flight Hardware/GSE Multi-Purpose Hoisting), controlled areas will be established using flashing beacons, warning signs, rope and stanchions, as directed by safety personnel, for personnel safety. Changes to the controlled area will be coordinated between the task leader and Boeing Safety without a deviation, provided there is no increase in the hazard to personnel. The Task leader & Safety are responsible to keep the controlled area clear of all nonessential personnel (reference OMI E5533, Section 1.6.3, Specific Requirements).

A.4.11:
A safety briefing for all personnel will be completed prior to the operations. Personnel will be instructed on their specific tasks and potential hazards will be identified (reference OMI E5533, Section 1.6.3, Specific Requirements).

A.4.12:
The personnel under/near the suspended load will be in voice communication with the crane operators. Upon communication loss, operations will stop immediately, personnel will clear the hazardous area, and the load will be safed. Operations will not continue until communications are restored.

A.4.13:
Personnel working beneath the load will be in continuous sight of the crane operator(s) and /or the signal person(s).

A.4.14:
NASA will conduct periodic reviews to ensure the continued safety of the procedures. As a minimum, NASA will annually evaluate the implementation of this procedure at each Center with operations on the suspended load list. Note that the Robonaut hoist and transfer from the ground stanchion to the Flight Support Equipment (FSE) bottom panel is a onetime procedure.

A.4.15:
A list of approved suspended load operations, list of cranes/hoists used for suspended load operations, and copies of the associated hazards analyses will be provided to the OSHA Office of Federal Agency Programs via NASA Headquarters for distribution to the appropriate regional and area OSHA offices. Quarterly updates to the documentation will be provided as needed. Note that the Robonaut hoist and transfer from the ground stanchion to the Flight Support Equipment (FSE) bottom panel is a onetime procedure.

Attachment A: Preload Calculation

The following calculation applies to Operation 2 as described and illustrated in this SLOAA. The calculation is necessary to ensure the crane does not exceed the calculated preload before Operator 1 removes the restraint bar from the Robonaut ground stanchion. Preloading the rigging in excess of the calculated value will cause Robonaut to pivot forward as the restraint bar is removed. The calculation below determines the maximum preload "P" the crane can assume before Robonaut begins to pivot about point "A."

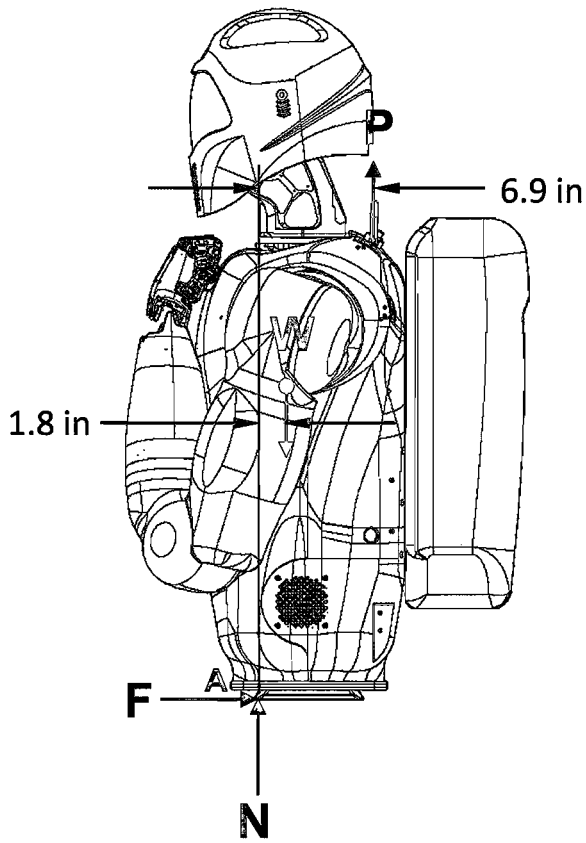

Figure A1: Free Body Diagram

For equilibrium:

$\sum F_y = 0$

$N+P-W = 0$

$\sum F_x = 0$

$F = 0$

$\sum M_A = 0$

W (1.8) – P (6.9) = 0

P = (1.8/6.9) W = 0.261 W where W = 322 lbs (See attachment B)

P = 84.0 lbs

Attachment B: Robonaut Center of Gravity Location

CG LOCATION FROM 3 BACKPACK SURFACES

X FROM LEFT SIDE AS VIEWED FROM REAR
Y FROM BOTTOM SIDE
Z FROM FORWARD SURFACE
(NOTE: X, Y, Z SHOWN ARE CAD MODEL REFS AND NOT WEIGHT & CG PHOTO REFS)

Weight as shown = 322 lb.
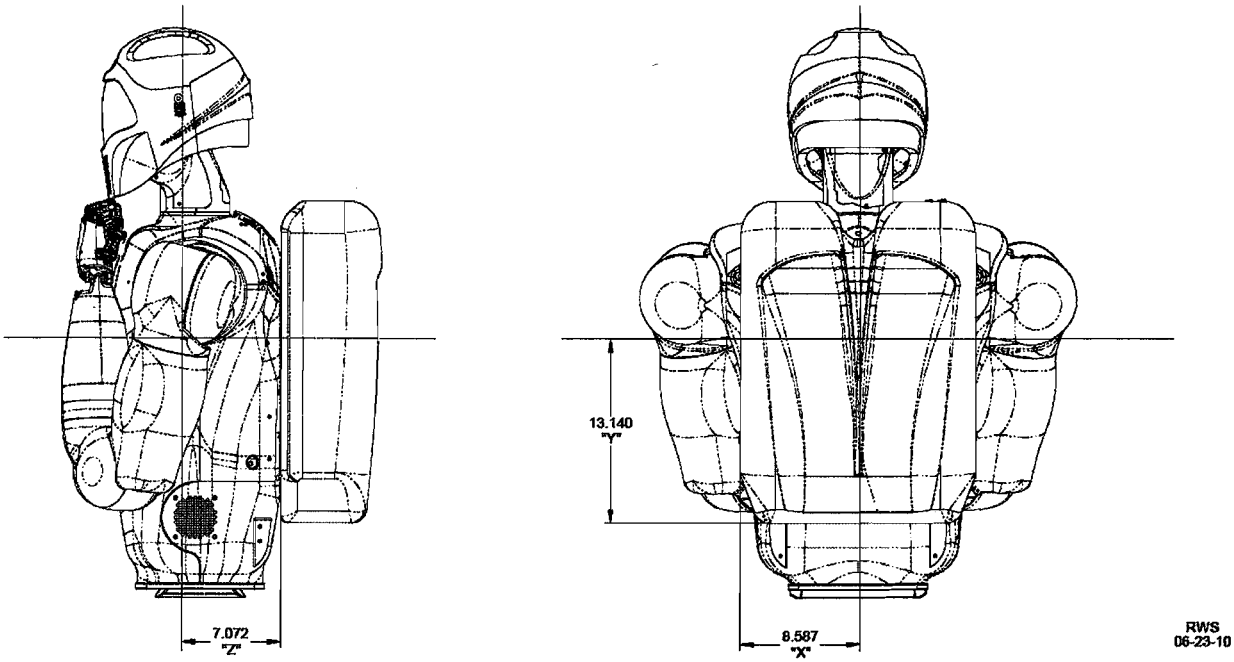
Weight ±10 lbs and CG (X, Y, and Z) within +/- .25 in.