SAA09FY091-007
MARCH 1991

# SYSTEM ASSURANCE ANALYSIS

# OF THE

# 30-TON BRIDGE CRANES

# AT THE

# ORBITER PROCESSING FACILITY

# HIGH BAY 3

Baseline Number: 380.00

PMN: H70-1379-01

WUC: GDFCRFN000

SS/FC: GD

SYSTEM: CRITICAL

National Aeronautics and
Space Administration

**John F. Kennedy Space Center**

NASA

KSC FORM 16-12 (REV. 8/76)

NOTICE — When Government drawings, specifications, or other data are used for any purpose other than in connection with a definitely related Government procurement operation, the United States Government thereby incurs no responsibility nor obligation whatsoever; and the fact that the Government may have formulated, furnished, or in any way supplied the said drawings, specifications or other data is not to be regarded by implication or otherwise as in any manner licensing the holder or any other person or corporation, or conveying any rights or permission to manufacture, use, or sell any patented invention that may in any way be related thereto.

| APPLICATION | | PART NO. | MF | REVISIONS | | | |
|---|---|---|---|---|---|---|---|
| NEXT ASSY | USED ON | | | SYM | DESCRIPTION | DATE | APPROVAL |
| | | | | NEW | | | |

PREPARED BY: Peter Clukey 6-26-91
P. CLUKEY LSOC 51-22
RELIABILITY ENGINEER

CONCURRENCE: Pam Trudel 6/26/91
P. TRUDEL LSOC 52-10
SYSTEM SAFETY ENGINEER

APPROVED: for Brian Joyner
J. JOYNER RT-ENG

CONCURRENCE: Richard F. Christie 7/12/91
D. CHRISTIE LSOC 17-83
SYSTEMS DESIGN ENGINEERING

APPROVED: 7/1/91
R. HABER DF-FED-3
FACILITIES ENGINEERING

CONCURRENCE: Robert R. Galinanes
R. GALINANES LSOC 33-27
CRANES, DOORS, PLATFORMS & ELEVATOR OPRTNS & MNTNCE

APPROVED: Emery W. Lamar 7/9/91
E. LAMAR TE-FAC-2
STRUCTURAL SYSTEMS ENGR.

| | | | |
|---|---|---|---|
| UNLESS OTHERWISE SPECIFIED DIMENSIONS ARE IN INCHES TOLERANCES ON FRACTIONS DECIMALS ANGLES | ORIGINAL DATE OF DRAWING 3/91 | SYSTEM ASSURANCE ANALYSIS OF THE 30-TON BRIDGE CRANES IN THE ORBITER PROCESSING FACILITY HIGH BAY 3 OMD BASELINE NO. 380.00 | JOHN F. KENNEDY SPACE CENTER, NASA |
| MATERIAL | DRAFTSMAN / CHECKER | | KENNEDY SPACE CENTER FLORIDA |
| | TRACER / CHECKER | | |
| | ENGINEER CLUKEY / ENGINEER | | |
| HEAT TREATMENT | SUBMITTED Melvin K. Green 7/29/91 M.K. GREEN, SUPR REL ENG | | |
| FINAL PROTECTIVE FINISH | APPROVED 9/17/91 A.M. STEVENS, MGR REL ENG | SCALE / UNIT WT | DWG SIZE A / SAA09FY091-007 / SHEET 1 OF 241 |

KSC FORM 21-2C (REV. 3/76)

# TABLE OF CONTENTS

**1.0 SUMMARY OF FINDINGS AND RECOMMENDATIONS** . . . . . 5
1.1 SYSTEM CRITICALITY . . . . . 5
1.2 MECHANICAL FMEA SUMMARY . . . . . 5
1.3 ELECTRICAL FMEA SUMMARY . . . . . 5
1.4 LPS CONTROL/MONITOR FUNCTIONS REVIEW SUMMARY . . . . . 5
1.5 HAZARD ANALYSIS SUMMARY . . . . . 6
1.6 FLEXHOSE FMEA SUMMARY . . . . . 6
1.7 ORIFICE FMEA SUMMARY . . . . . 6
1.8 FILTER FMEA SUMMARY . . . . . 6
1.9 AREAS OF CONCERN SUMMARY . . . . . 6
1.10 SNEAK CIRCUIT ANALYSIS SUMMARY . . . . . 6
1.11 RECOMMENDATIONS . . . . . 6
1.12 CRITICALITY CATEGORY 1R ITEMS SUMMARY . . . . . 6

**2.0 SYSTEM BASELINE/GROUND RULES/DEFINITIONS/DOCUMENTATION** . . . . . 6
2.1 SYSTEM BASELINE . . . . . 6
2.2 GROUND RULES . . . . . 7
2.3 DEFINITIONS OF CRITICALITY AND HAZARD CATEGORIES . . . . . 7
2.3.1 Criticality Definitions and Categories. . . . . 7
2.3.2 Hazard Definitions and Categories. . . . . 9
2.4 DOCUMENTATION LIST . . . . . 10

**3.0 SYSTEM DESCRIPTION** . . . . . 13
3.1 GENERAL . . . . . 13
3.2 BRIDGE . . . . . 14
3.3 TROLLEY . . . . . 14
3.4 HOIST . . . . . 14
3.5 CONTROL CAB . . . . . 14
3.6 HOIST COMPUTER CONTROL . . . . . 15

**4.0 CRITICALITY ASSESSMENT** . . . . . 24

**5.0 FAILURE MODES AND EFFECTS ANALYSIS (FMEA)** . . . . . 29
5.1 MECHANICAL FMEA . . . . . 29
5.2 ELECTRICAL FMEA . . . . . 53
5.3 FLEXHOSE FMEA . . . . . 206
5.4 ORIFICE FMEA . . . . . 206
5.5 FILTER FMEA . . . . . 206

**6.0 CRITICAL ITEMS LIST** . . . . . 206
6.1 CRITICAL HARDWARE LIST . . . . . 206
6.2 CRITICAL ITEMS SHEETS . . . . . 208

**7.0 HAZARD ANALYSIS** . . . . . 216

**8.0 LPS CONTROL/MONITOR FUNCTIONS REVIEW** . . . . . 228

8.1 APPLICATION SET CONTROL LOGIC REVIEW . . . . . 228
8.1.1 PREREQUISITE CONTROL LOGIC REVIEW. . . . . 228
8.1.2 REACTIVE CONTROL LOGIC REVIEW. . . . . 228
8.2 LAUNCH COMMIT CRITERIA AND GROUND LAUNCH SEQUENCER REVIEW . . . . 228
8.3 LPS/CCMS CONTROL FUNCTION ANALYSIS . . . . . 228

**9.0 END-TO-END ANALYSIS** . . . . . 228

**10.0 SNEAK CIRCUIT ANALYSIS** . . . . . 230

**11.0 EMERGENCY SAFING ANALYSIS** . . . . . 230

**12.0 CRITICALITY CATEGORY 1R ANALYSIS** . . . . . 230
12.1 RELIABILITY BLOCK DIAGRAM . . . . . 230
12.2 CRITICALITY CATEGORY 1R ITEMS . . . . . 235

**13.0 AREAS OF CONCERN** . . . . . 238

**Appendix A. ABBREVIATIONS** . . . . . 239

## LIST OF ILLUSTRATIONS

1. 30-TON BRIDGE CRANES IN OPF HIGH BAY 3 . . . . . 16
2. 30-TON BRIDGE CRANE IN OPF HIGH BAY 3 . . . . . 17
3. BRIDGE DRIVE ASSEMBLY FOR 30-TON BRIDGE CRANES IN OPF HIGH BAY 3 . . . . 18
4. TROLLEY DRIVE ASSEMBLY FOR THE 30-TON BRIDGE CRANES IN OPF HIGH BAY 3 19
5. HOIST DRIVE ASSEMBLY FOR THE 30-TON BRIDGE CRANES IN OPF HIGH BAY 3 . . 20
6. CAB CONTROLS AND DISPLAYS FOR THE 30-TON BRIDGE CRANES IN OPF HIGH BAY 3 . . . . . 21
7. CAB CONTROLLER ARRANGEMENT FOR THE 30-TON BRIDGE CRANES IN OPF HIGH BAY 3 . . . . . 22
8. HOIST COMPUTER CONTROLLER SYSTEM BLOCK DIAGRAM . . . . . 23
9. SYSTEM FUNCTIONS BLOCK DIAGRAM OF THE 30-TON BRIDGE CRANES, OPF HB-3 25
10. BRIDGE DRIVE MECHANICAL POWER FLOW FOR THE 30-TON BRIDGE CRANES IN OPF HIGH BAY THREE . . . . . 31
11. TROLLEY DRIVE MECHANICAL POWER FLOW FOR THE 30-TON BRIDGE CRANES IN OPF HIGH BAY THREE . . . . . 38
12. HOIST MECHANICAL POWER FLOW FOR THE 30-TON BRIDGE CRANES IN OPF HIGH BAY THREE . . . . . 43
13. TACH/SELSYN/FEEDBACK ASSEMBLY FOR HOIST SYSTEM OF THE 30-TON BRIDGE CRANES IN OPF HIGH BAY THREE . . . . . 48
14. OVERSPEED SWITCH/LIMIT SWITCH ASSEM. FOR THE HOIST SYS. OF THE 30-TON BRIDGE CRANES IN OPF HB-3 . . . . . 50
15. END-TO-END BLOCK DIAGRAM OF THE 30-TON BRIDGE CRANE . . . . . 229

# LIST OF TABLES


1. Electrical Critical Items . . . . . 5
2. System Documentation List . . . . . 10
3. SYSTEM CRITICALITY ASSESSMENT SUMMARY . . . . . 26
4. Mechanical Passive Item List . . . . . 30
5. MECHANICAL FMEA - BRIDGE . . . . . 32
6. Mechanical Passive Item List . . . . . 37
7. MECHANICAL FMEA - TROLLEY . . . . . 39
8. Mechanical Passive Item List . . . . . 42
9. MECHANICAL FMEA - HOIST . . . . . 44
10. MECHANICAL FMEA - HOIST TACH/RESOLV/SELSYN . . . . . 49
11. MECHANICAL FMEA - HOIST OVERSPEED ASSEMBLY . . . . . 51
12. ELECTRICAL FMEA - MAIN POWER . . . . . 55
13. ELECTRICAL FMEA - SELSYN . . . . . 71
14. ELECTRICAL FMEA - BRIDGE . . . . . 75
15. ELECTRICAL FMEA - TROLLEY . . . . . 110
16. ELECTRICAL FMEA - HOIST . . . . . 142
17. ELECTRICAL FMEA - PIC . . . . . 192
18. Critical Hardware List . . . . . 207
19. SYSTEM HAZARD ANALYSIS . . . . . 223
20. Interfacing System Loss Assessment . . . . . 228
21. CRITICALITY CATEGORY 1R ITEMS SUMMARY . . . . . 236

# 1.0 SUMMARY OF FINDINGS AND RECOMMENDATIONS

## 1.1 SYSTEM CRITICALITY

The 30-Ton Bridge Cranes in the Orbiter Processing Facility are assessed as critical. Failure of the system during raising or lowering, lateral east/west, or north/south direction movement of Orbiter Payloads, Orbiter Components, and Ground Support Equipment could cause loss of life, vehicle, and/or loss (damage) of a vehicle system. See section 4.0 for additional information.

## 1.2 MECHANICAL FMEA SUMMARY

There were no mechanical Critical Items identified in the critical functions assessed in section 4.0 for this system. See section 5.1 for additional information.

## 1.3 ELECTRICAL FMEA SUMMARY

There were six (6) electrical Critical Items identified in the critical functions assessed in section 4.0 for this system. They are summarized below. See sections 5.2 and 6.0 for additional information.

Table 1. **Electrical Critical Items**

| Ref Des/ Find No. | Nomenclature | Critical Failure Mode | Criticality Category |
|---|---|---|---|
| AN-DC50 | BRIDGE TACHOMETER | FAILS OPEN/SHORT | 2 |
| AN-DC50 | TROLLEY TACHOMETER | FAILS OPEN/SHORT | 2 |
| RN55C | BRIDGE TACHOMETER SCALING RESISTOR | FAILS OPEN | 2 |
| RN55C | TROLLEY TACHOMETER SCALING RESISTOR | FAILS OPEN | 2 |
| EC-1890 | BRIDGE TRAVEL INTERFACE MODULE | FAILS OPEN | 2 |
| EC-1890 | TROLLEY TRAVEL INTERFACE MODULE | FAILS OPEN | 2 |

## 1.4 LPS CONTROL/MONITOR FUNCTIONS REVIEW SUMMARY

There are no LPS control/monitor functions associated with this system.

## 1.5 HAZARD ANALYSIS SUMMARY

There were no hazards identified during this analysis. See section 7.0 for additional information

## 1.6 FLEXHOSE FMEA SUMMARY

There are no flexhoses associated with this system.

## 1.7 ORIFICE FMEA SUMMARY

There are no orifices associated with this system.

## 1.8 FILTER FMEA SUMMARY

There are no filters associated with this system.

## 1.9 AREAS OF CONCERN SUMMARY

There were 4 Areas of Concern identified with this system.

- Three (3) catagories of non-compliance with NSS/GO 1740.9 requirements
- Elimination of a critical single failure point

See section 13.0 for additional information.

## 1.10 SNEAK CIRCUIT ANALYSIS SUMMARY

There was no Sneak Circuit Analysis performed on this system. See section 10.0 for additional information.

## 1.11 RECOMMENDATIONS

The risk associated with the Critical Items identified in section 6.0 should be accepted by management based upon the acceptance rationale provided on the associated Critical Items List Sheets.

## 1.12 CRITICALITY CATEGORY 1R ITEMS SUMMARY

There were 10 criticality category 1R items identified in the critical functions assessed in section 4.0 for this system. See section 12.0 for additional information.

# 2.0 SYSTEM BASELINE/GROUND RULES/DEFINITIONS/DOCUMENTATION

## 2.1 SYSTEM BASELINE

This system is baselined for STS by 79K09579, "KSC Facilities, Systems, and Equipment Organizational Level OMD Baseline," dated 01/31/91. The OMD Baseline Number is 380.00.

## 2.2 GROUND RULES

This analysis has been developed in accordance with NSTS 22206, Rev. C, "Requirements for Preparation and Approval of Failure Modes and Effects Analysis (FMEA) and Critical Items List (CIL)."

The following additional ground rules and assumptions were used during this analysis.

a. All crane motion within three (3) feet of flight hardware will be in slow speed range. When approaching flight hardware, the crane will be stopped at a distance of three (3) feet or greater and all crane functions will be set into low speed range. Therefore, failures in switching to low speed range will have at least three (3) feet of clearance when motion starts.

b. Failure modes for the bridge, trolley, and hoist master switches regarding contacts failing closed are not credible due to series contact and cam mechanism design. These failures will not be considered.

## 2.3 DEFINITIONS OF CRITICALITY AND HAZARD CATEGORIES

The following criticality and hazard categories were used throughout this analysis.

**2.3.1 Criticality Definitions and Categories.** Criticality definitions and categories are defined as follows:

| Category | Definitions |
|---|---|
| 1 | Single failure which could result in loss of life or vehicle. |
| 1R | Two hardware items, which if failed, could result in loss of life or vehicle. |
| 1S | Single failure in a safety or hazard monitoring system that could cause the system to fail to detect, combat, or operate when needed during the existence of a hazardous condition and could result in loss of life or vehicle. |
| 2 | Single failure that could result in loss (damage) of a vehicle system. |
| 3 | All others. |

Cause - Major reason or event that produces a failure mode.

Component - A combination of parts, devices, and structures, usually self contained, which perform a distinctive function in the operation of the overall equipment. A "black box" (e.g., transmitter, power supply, cryogenic pump, filter assembly).

Correcting Action - An identification of actions, automatic or manual, which could be taken to mitigate the effect of failure.

Critical System - Ground Support Equipment/Facility Systems (GSE) is assessed as critical if loss of overall system function or improper performance of a system function could result in the loss of life, loss of vehicle, or loss (damage) of a vehicle system.

Critical Item - A critical item is defined as a Criticality Category 1, 1S, or 2 Single Failure Point or a redundant hardware item where the second failure results in loss of life or vehicle and the item is not capable of checkout prior to use.

Criticality Assessment - An analysis of each system function to determine if loss or improper performance of the function could result in loss of life, vehicle, and/or loss (damage) of a vehicle system without regard to redundancy.

Fail Safe - The ability to sustain a failure without causing loss of life/vehicle or damage to a vehicle system. (Includes the capability to safe the systems and successfully terminate operations).

Failure - The inability of a system, subsystem, component, or part to perform its required function within specified limits, under specified conditions for a specified duration.

Failure Mode - A description of the manner in which an item can fail.

Function - The activity or operation that a part, component, or system must perform to accomplish its intended purpose.

Interface - The point or area where a relationship exists between two or more parts, systems, programs, persons, or procedures wherein physical and/or functional compatibility is required.

Like Redundancy - Identical hardware items performing the same function.

Redundancy Screens - The following screens will be evaluated for all identified criticality category 1R items.

Screen A - The redundant item is capable of being checked and verified prior to use.

Screen B - Loss of the redundant item is readily detectable by the ground crew. (This screen is not applicable to standby redundancy.)

Screen C - Loss of all redundant items cannot result from a single credible cause, such as contamination.

Line Replaceable Unit (LRU) - An item whose replacement constitutes the optimum organizational maintenance repair action for a higher indenture item, i.e., any assembly which can be removed and replaced as a unit from the system at the operating location.

Loss (Damage) of Vehicle System - Loss of the capability to provide the level of system performance required for normal or emergency operations.

Operational Redundancy - Redundant elements, all of which are fully energized during the subsystem operating cycle. Operational redundancy includes load sharing redundancy wherein redundant elements are connected in such a manner that, upon failure of one unit,

the remaining redundant elements will continue to perform the subsystem function. Switching out the failed element is not required.

Passive Component - A component that may be necessary to the performance or structural integrity of the system but has no active function.

Prerequisite Control Logic - GSE software program logic that assures proper sequence of commands.

Reactive Control Logic - GSE software program logic that assures automatic reaction to indicated failures.

Safety or Hazard Monitoring System - A system whose function is to detect, combat, or operate when needed during a hazardous condition which has occurred because of prior failures or events.

Standby Redundancy - Redundant hardware items that are nonoperative until they are switched into the subsystem upon failure of the primary items. Switching can be accomplished by either automatic or manual means.

Unlike Redundancy - Non-identical items performing the same function.

**2.3.2 Hazard Definitions and Categories.** Hazard definitions and categories are defined as follows:

Hazard - The presence of a potential risk situation caused by an unsafe act or condition.

Hazard Analysis - The determination of potential sources of danger and recommended resolutions in a timely manner for those conditions found in either the hardware/software systems, the person-machine relationship, or both, which cause loss of personnel capability, loss of system, or loss of life or injury to the public.

Hazard Report Closure Classification.

a. Eliminated Hazard - A hazard that has been eliminated by removing the hazard source or by deleting the hazardous operations.

b. Controlled Hazard - The likelihood of occurrence has been reduced to an acceptable level by implementing the appropriate hazard reduction precedence sequence to comply with program requirements.

c. Accepted Risk - Hazard which has not been counteracted by redundancy purge provisions, appropriate safety factors, containment/isolation provision, backup system/operation, safety devices, alarm/caution and warning devices, or special automatic/manual procedures. Catastrophic hazards, critical hazards, hazards resulting from failure to meet program requirements, and Single Failure Points (SFPs) in emergency systems will be documented. A hazard will be classified as an "accepted risk" only after (1) all reasonable risk avoidance measures have been identified, studied, and documented; (2) project/program management has made a decision to accept the risk on the basis of documented risk acceptance rationale; and (3) Safety management has concurred in the accepted risk rationale.

Severity Level - Should the hazard occur, its worst case severity would be:

a. Catastrophic - Hazard could result in a mishap causing fatal injury to personnel, and/or loss of one or more major elements of the flight vehicle or ground facility.

b. Critical - Hazard could result in serious injury to personnel, and/or damage to flight or ground equipment which would cause mission abort or a significant program delay (one or more days).

c. Marginal - Hazard could result in a mishap of minor nature inflicting first-aid injury to personnel, and/or damage to flight or ground equipment which can be tolerated without abort or repaired without significant program delay (less than one day).

Hazard Report Status.

a. Closed - Corrective action to eliminate or control the hazard is completed, evaluated, and verified and management actions to accept the safety risks are completed. Actions taken, organization which performed actions and completion dates are to be documented in this data element.

b. Open - Corrective action evaluation and verification is in progress. The status shall remain open until management has reviewed the actions taken and accepted the safety risk. Actions required, organization responsible for performing the actions and due dates are to be documented in this data element.

## 2.4 DOCUMENTATION LIST

The following documents were used in completing this analysis:

Table 2 (Page 1 of 4). **System Documentation List**

| Document/Drawing No. | Rev. | Outstanding EO Numbers | Title |
|---|---|---|---|
| NSTS 22206 | C | - | Requirements for Preparation and Approval of Failure Modes and Effects Analysis (FMEA) and Critical Items List (CIL) |
| NSTS 22254 | - | - | Methodology for Conduct of NSTS Hazard Analyses |
| OMI Q6331 | - | - | Maintenance Instructions for the 30-Ton Bridge Crane, OMRF |
| OMI Q3516 | - | - | Operating Instructions for the 30-Ton Cranes, OPF-3 |
| 79K11839 | B | - | SDL OPF Facility System Crane 30 Ton |
| 79K28786 | B | - | Orbiter Modification and Refurbishment Facility, 30-Ton Bridge Crane |

Table 2 (Page 2 of 4). **System Documentation List**

| Document/Drawing No. | Rev. | Outstanding EO Numbers | Title |
|---|---|---|---|
| 79K28787 | B | - | OMRF 30-Ton Bridge Crane (Orbiter Modification and Refurbishment Facility) Specification for, PCN 92833 |
| F-10314 | - | - | Erection Drawing, 30-Ton Capacity OMRF Bridge Crane, NASA - JFK Space Center (Ederer Incorporated) |
| 80K53512 | - | - | LC-39 OPF High Bay 3 30-Ton Overhead Crane Electrical |
| EB-2286 | F | - | Crane Control Elementary Drawings for NASA OMRF (Ederer Incorporated) |
| EA-2052 | A | - | Power and Control One-Line Diagram (30-Ton Capacity Bridge Crane for the OMRF, Ederer Incorporated) |
| EA-2046 | E | - | DC Hoist with Load Float and Redundant Drives Block Diagram (30-Ton Capacity Bridge Crane for the OMRF, Ederer Incorporated) |
| NSS/G0 1740.9 | - | - | NASA Safety Standard for Lifting Devices and Equipment |
| 79K32800 | A | - | OMRF Second 30 Ton Bridge Crane |
| 79K32801 | - | - | OMRF Second 30 Ton Bridge Crane |
| _____ | - | - | Note: The Following are vendor drawings from Ederer Incorporated. |
| F-1828 | - | - | OMRF, 30-Ton Overhead Traveling Bridge Crane, Operation and Maintenance Manual. |
| VEN-1612, 1613 | - | - | OMRF 30 Ton Bridge Crane As-Built |
| PF-1170 | D | - | Clearance Drawing 30 Ton Capacity O.M.R.F. |
| F-10310 | B | - | Bridge Squaring Shaft Assembly 30 Ton Bridge Crane OMRF |
| EA-2115 | B | - | DC Travel Interface Module Lock Diagram |
| EA-2070 | B | - | Travel Interface Module |
| EA-2069 | B | - | Hoist Interface Module |

Table 2 (Page 3 of 4). **System Documentation List**

| Document/Drawing No. | Rev. | Outstanding EO Numbers | Title |
|---|---|---|---|
| EA-2065 | B | - | Trolley Bridge Control Schematic |
| EA-2064 | B | - | Main Hoist Control Panel |
| EA-2063 | B | - | Cab Console Arrangement |
| EA-2058 | B | - | Dual Tachometer Overspeed Module |
| EA-2057 | B | - | Interconnection Diagram |
| EA-2054 | B | - | Trolley Powertrack and Mainline Festoon |
| EA-2046 | D | - | DC Hoist with Load Float and Redundant Drives |
| D-14524 | - | - | Flexible Coupling |
| D-14511 | - | - | Flexible Coupling |
| D-14510 | A | - | Floating Shaft |
| D-14487 | - | - | Squaring Shaft |
| D-14486 | - | - | Squaring Shaft |
| D-14485 | - | - | Floating Shaft |
| C-22223 | - | - | Sprocket Rework Overspeed Switch Assembly |
| C-22222 | - | - | Hub Overspeed Switch Sprocket |
| C-22188 | - | - | Equalizer Bar |
| C-22164 | B | - | Adapter Shaft |
| C-22162 | - | - | Adapter Shaft Trolley |
| C-22126 | A | - | Adapter Shaft |
| C-22121 | - | - | Coupling Assembly |
| C-22090 | - | - | Coupling Modification Hoist Output Coupling |
| C-22089 | - | - | Trolley Wheel Shaft Idler |
| C-22088 | - | - | Trolley Wheel Shaft Driver |
| C-22033 | - | - | Bridge Wheel Shaft Idler |
| C-22032 | A | - | Bridge Wheel Shaft Driver |
| B-17349 | - | - | Crane Stop 30 Ton OMRF Crane |
| B-17330 | C | - | Hoist Position Indicator |

Table 2 (Page 4 of 4). **System Documentation List**

| Document/Drawing No. | Rev. | Outstanding EO Numbers | Title |
|---|---|---|---|
| B-17329 | A | - | Bridge Travel Position Indicator |
| B-17328 | B | - | Trolley Travel Position Indicator |
| B-17321 | - | - | Bumper Stop Assembly and Details |
| B-17314 | - | - | Coupling Spacer Bridge Drive Output Coupling |
| B-17312 | - | - | Overspeed Switch/Limit Switch Assembly |
| B-17301 | B | - | Tachometer/Selsyn/Feedback Assembly 30 Ton Crane OMRF |
| B-17282 | B | - | Hydraulic Shock Absorber |
| A-13773 | - | - | Bridge Travel Limit Switch Arrangement |
| A-13767 | - | - | Trolley Travel Limit Switch Arrangement |
| A-13750 | B | - | Cab Arrangement 30 Ton OMRF Crane |
| A-13726 | A | - | Trolley Drive Assembly 30 Ton OMRF Crane |
| A-13725 | B | - | Hoist Assembly 30 Ton OMRF Crane |
| A-13724 | B | - | Trolley Assembly 30 Ton OMRF Crane |

## 3.0 SYSTEM DESCRIPTION

### 3.1 GENERAL

The 30-Ton Bridge Cranes in OPF High Bay 3 are used to raise or lower and provide lateral East/West or North/South direction movement of Orbiter Payloads, Orbiter components, and Ground Support Equipment (see figure 1). Each of the two 30-Ton cranes, built by Ederer Cranes, is a double girder, double rail bridge crane spanning 141 feet 6 1/4 inches (see figure 2). The bridges moves in North/South directions on parallel rails fixed to the structure of the OPF High Bay. Trolleys move in East/West directions on rails mounted on each bridge structure. Each trolley carries a complete hoist assembly which has a capacity of 30 tons. The maximum speeds for all speed ranges and functions will be matched between the two cranes for simultaneous crane operations.

## 3.2 BRIDGE

The purpose of the bridge drive assembly is to move the 30-Ton Bridge Crane laterally (North/South) across the length of the OPF High Bay (see figure 3). The drive assembly consists of two electric motors connected by a squaring shaft, two gear reducers, two electric brakes, and associated couplings connecting to a drive wheel on each end of the bridge.

The bridge drive is two-speed reversible, allowing bridge motion in either direction (North/South). Each speed range is fully controllable from zero to maximum speed, proportional to the control lever position. The maximum speed in low range is 5 feet per minute and the maximum speed in high range is 30 feet per minute.

## 3.3 TROLLEY

The purpose of the trolley drive assembly is to move the hoist assembly laterally (East/West) across the length of the bridge (see figure 4). The drive assembly consists of an electric motor, electric brake, and a gear reducer which drive a shaft to each of the two drive wheels.

The trolley drive is two-speed reversible, allowing trolley motion in either (East/West) direction. Each speed range is fully controllable from zero to maximum speed, proportional to the control lever position. The maximum speed in low range is 5 feet per minute and the maximum speed in high range is 31 feet per minute.

## 3.4 HOIST

The purpose of the hoist assembly is to lift, hold, and lower the load suspended from the load hook (see figure 5). The hoist assembly consists of a wire rope drum and shaft which is driven on each end by a gear reducer, electric motor, electric brake, and associated couplings.

The hoist is three-speed reversible, allowing hoist motion in either (up/down) direction. Each speed range is fully controllable from zero to maximum speed, proportional to the control lever position. The maximum speed in high range is 13 feet per minute, maximum speed in low range is 3 feet per minute, and the maximum speed in float mode is 0.5 feet per minute. The hoist has two (2) independant overspeed detection devices, one electronic, as part of the computer controller, and the other is a centrifugal switch driven directly from the wire rope drum.

## 3.5 CONTROL CAB

The operator's control cab is mounted on the East end of the bridge. All crane controls are mounted on a console on the West side of the cab excluding the float mode footswitch which is mounted on the floor under the hoist controls (see figure 7). The console is divided into three stations, one for each of the crane motions.

Each station has two position displays. A digital readout displays elapsed motion and is resettable to zero at any time. A calibrated dial indicator shows relative motion and is used for small movements. The bridge and trolley dials are incremented in 1/32 inches and the hoist dial is incremented in 1/64 inches. The position information is relayed through a Selsyn system using remote transmitters mechanically coupled to each drive system. The hoist has

redundant Selsyn transmitters. A switch is provided on the hoist control panel to select which transmitter is active.

Each station has an annunciator panel (see figure 6). For each motor there is an ammeter and indicator lights for overtemp warning and shutdown. The hoist panel has two additional lights. One indicates a load imbalance between the hoist motors and the other indicates a fault with the computer controller. The trolley panel also has an extra light which indicates when the main crane power is activated and an indicator test button which tests all indicator lights.

Each station has a control panel containing the control lever to command direction and proportional speed, and a switch to select the speed range (see figure 6). The trolley control panel also contains the crane main power on, off, and emergency stop buttons. The hoist control panel contains the float mode potentiometer which controls float mode speed and direction when the float mode footswitch is depressed.

## 3.6 HOIST COMPUTER CONTROL

Hoist operation is computer controlled. The computer control allows for precise positioning (1/64 of an inch) and a very large operating speed range. The computer control also allows the full load to be "floated" with the motor brakes released for up to ten minutes. The control system uses redundant motors and motor controllers allowing the second motor to hold the load if one control trips off line.

The computer control consists of a Programmable Industrial Computer (PIC), Hoist Interface Module (HIM), Motor Control Modules (MCM), and Hoist Overspeed Module (HOM).

The PIC forms a position loop using resolver feedback, this is the outermost control loop (see figure 8). The output is a rate (velocity) command to the HIM. The PIC provides zero speed detection and brake setting control to minimize brake wear. The PIC provides torque proving to verify armature current before each movement.

The HIM forms a rate (velocity) loop using tachometer feedback (see figure 8). The output is a current (torque) command to the MCM. The HIM provides control lever and float mode potentiometer interfaces. The HIM also provides the field normal/economize command.

The MCM forms a current (torque) loop using armature current feedback (see figure 8). The MCM provides regulated motor armature and motor field current. The MCM includes relay circuits, motor current overload detection and shutdown, input current limiting and shutdown, motor overvolts and shutdown.

The HOM provides electronic motor overspeed detection and shutdown. The HOM also provides detection and shutdown when the hoist moves opposite to the direction commanded.

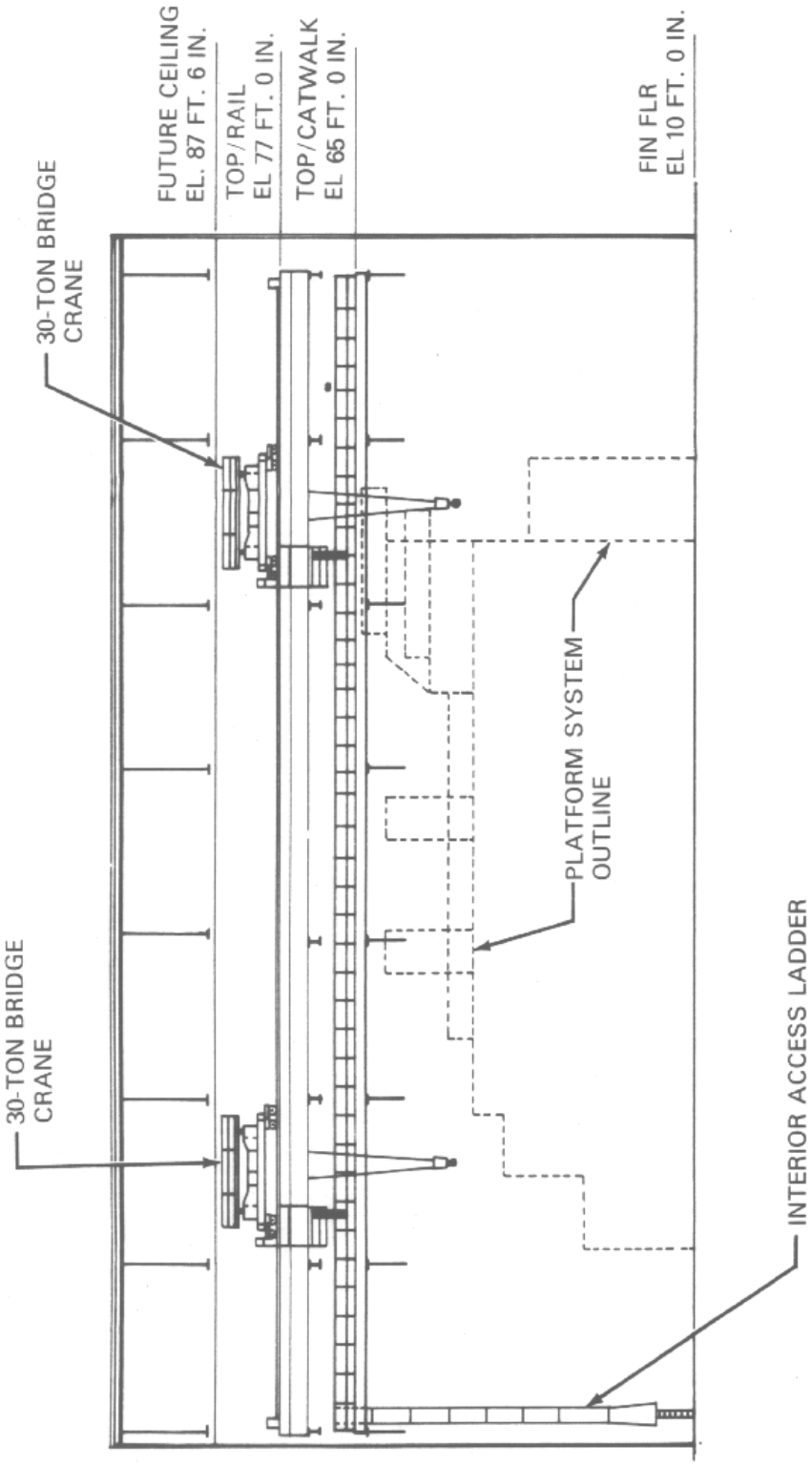


FIGURE 1. 30-TON BRIDGE CRANES IN OPF HIGH BAY 3

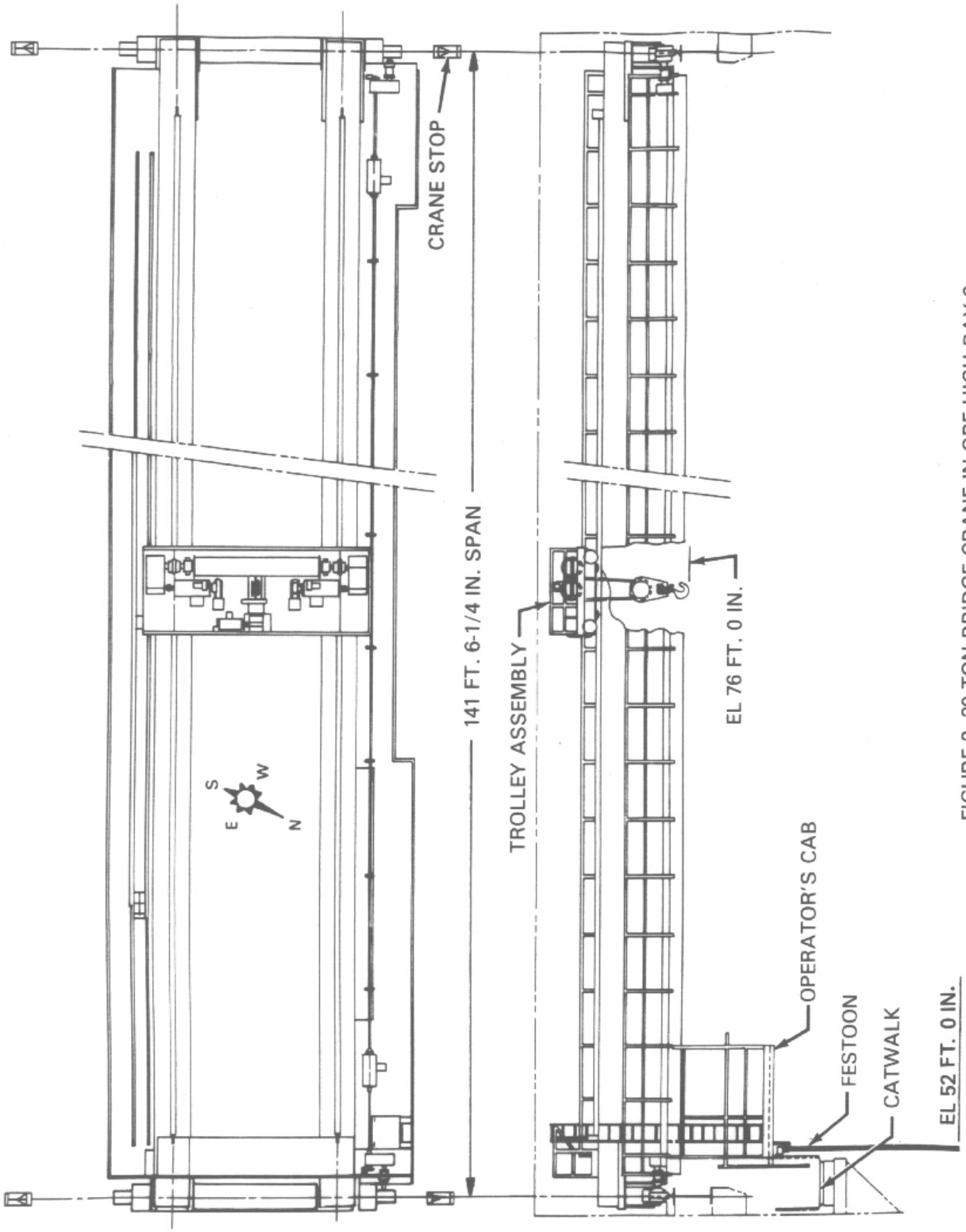


FIGURE 2. 30-TON BRIDGE CRANE IN OPF HIGH BAY 3

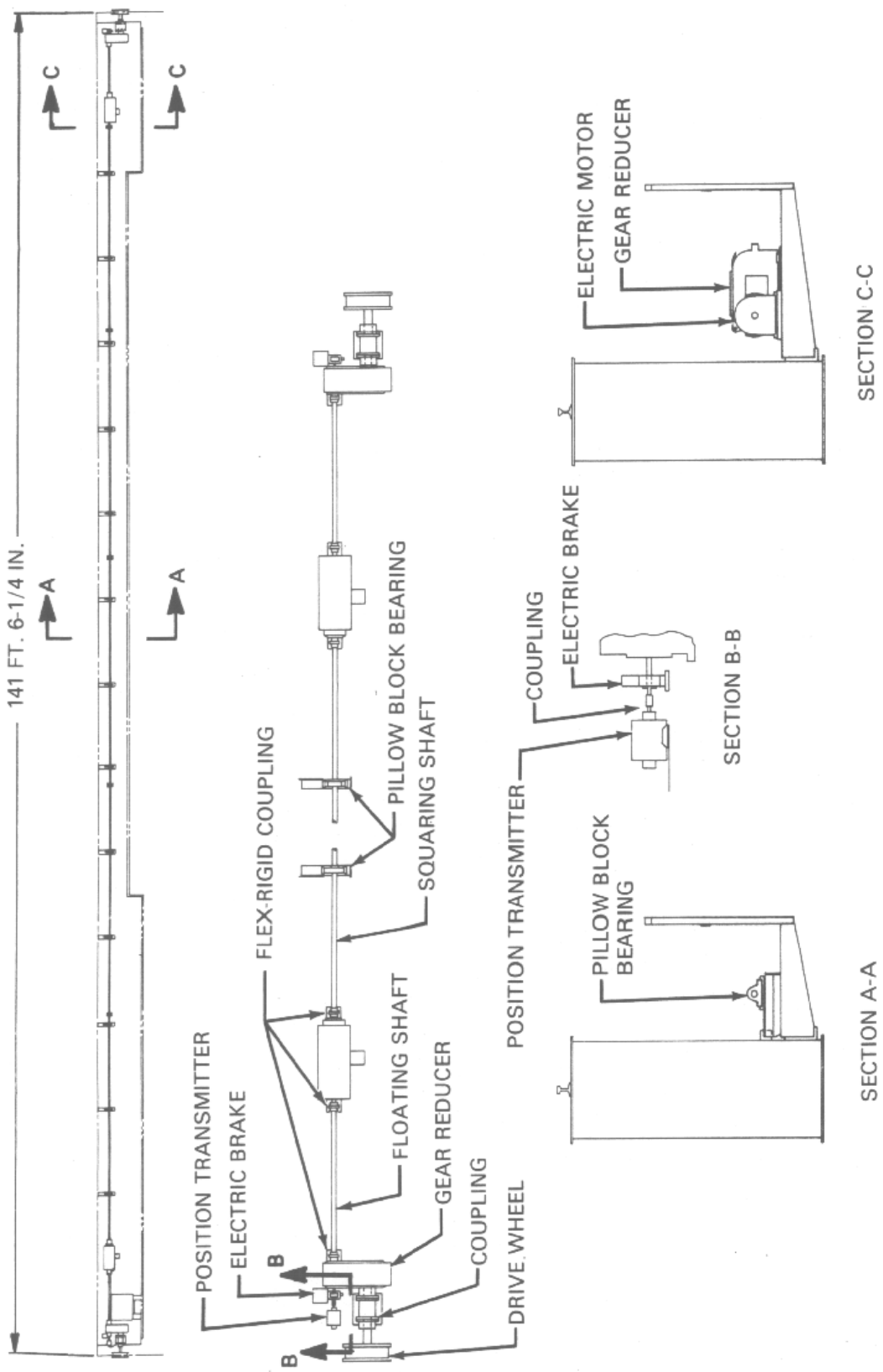


FIGURE 3. BRIDGE DRIVE ASSEMBLY FOR 30-TON BRIDGE CRANES IN OPF HIGH BAY 3

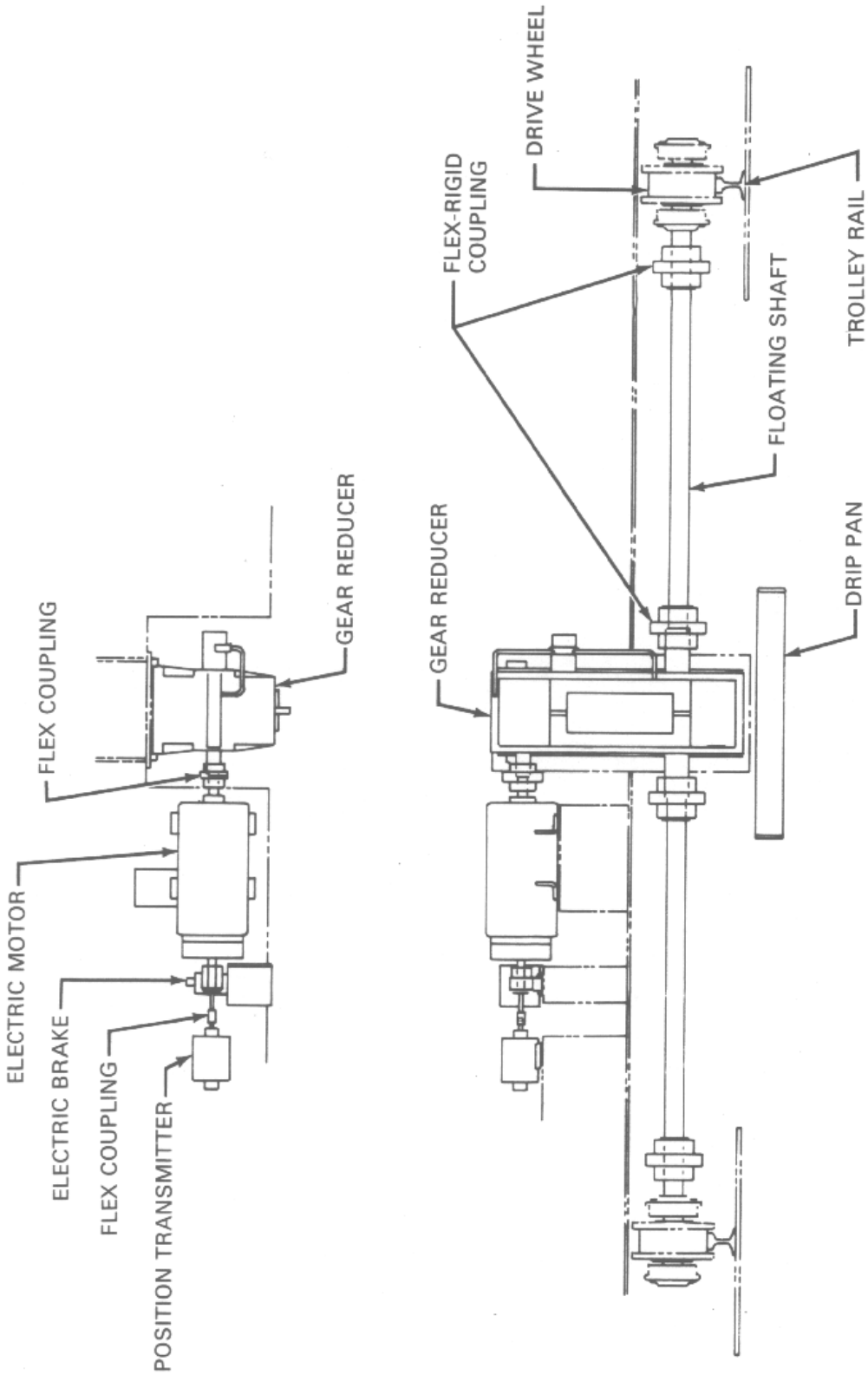


FIGURE 4. TROLLEY DRIVE ASSEMBLY FOR THE 30-TON BRIDGE CRANES IN OPF HIGH BAY 3

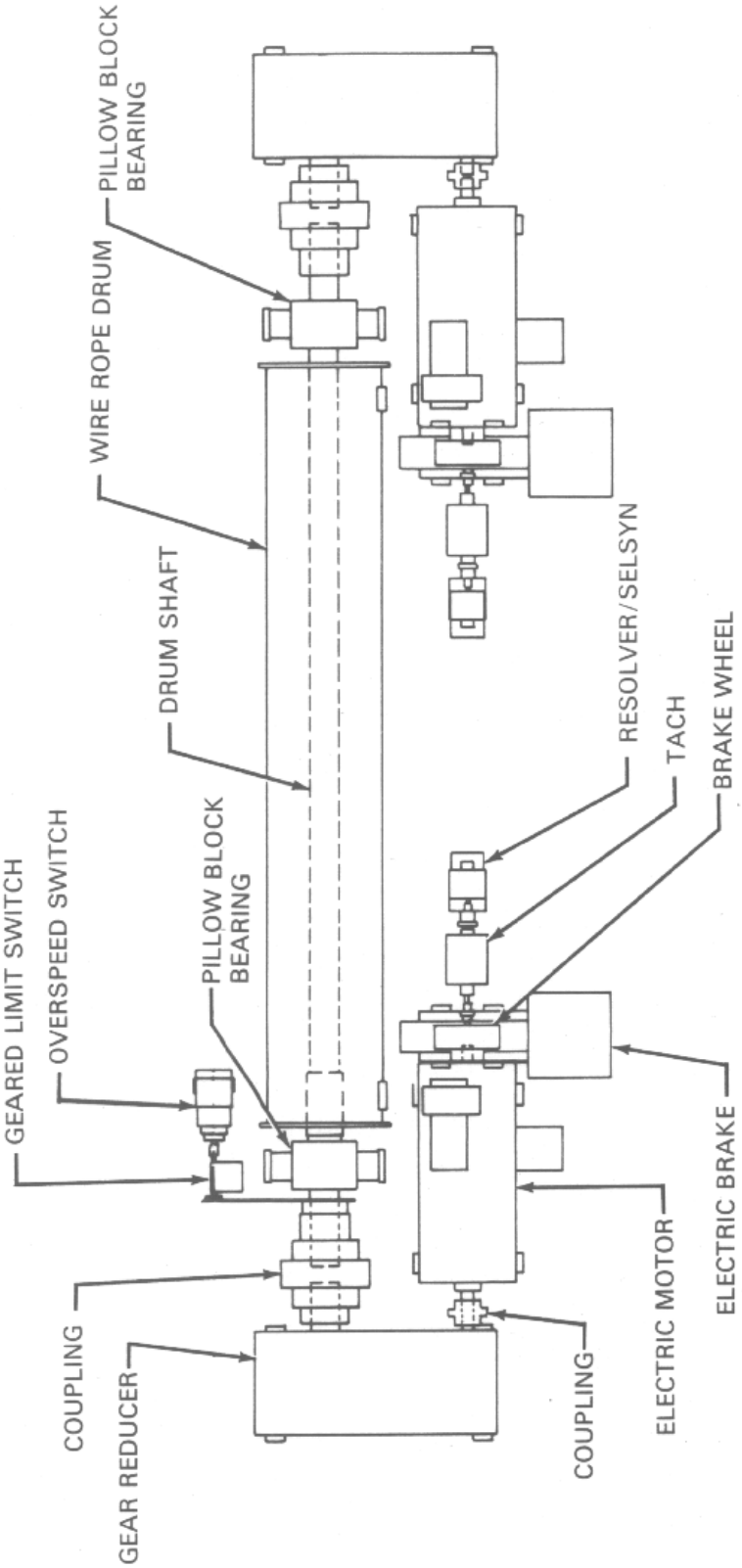


FIGURE 5. HOIST DRIVE ASSEMBLY FOR THE 30-TON BRIDGE CRANES IN OPF HIGH BAY 3

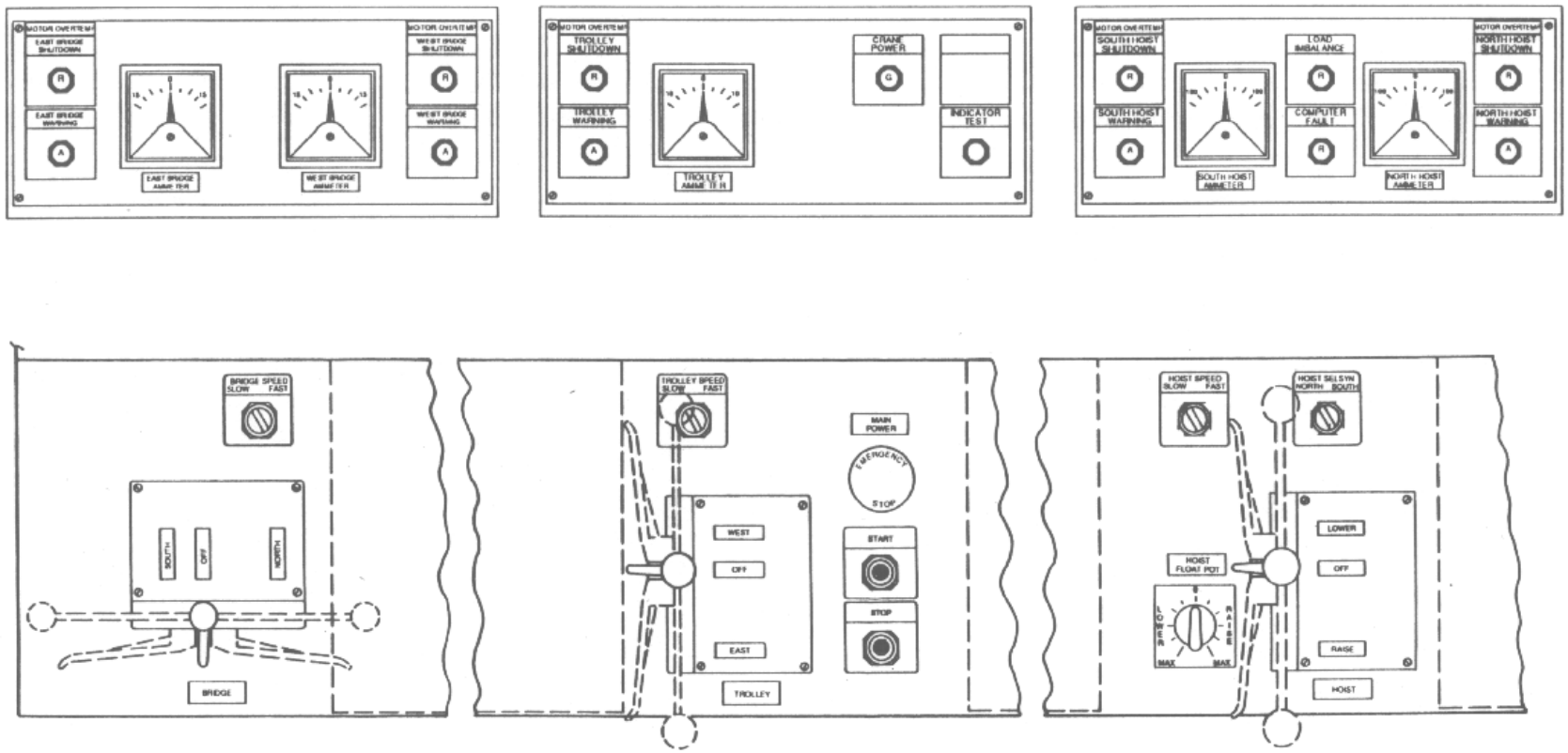


FIGURE 6. CAB CONTROLS AND DISPLAYS FOR THE 30-TON BRIDGE CRANES IN OPF HIGH BAY 3

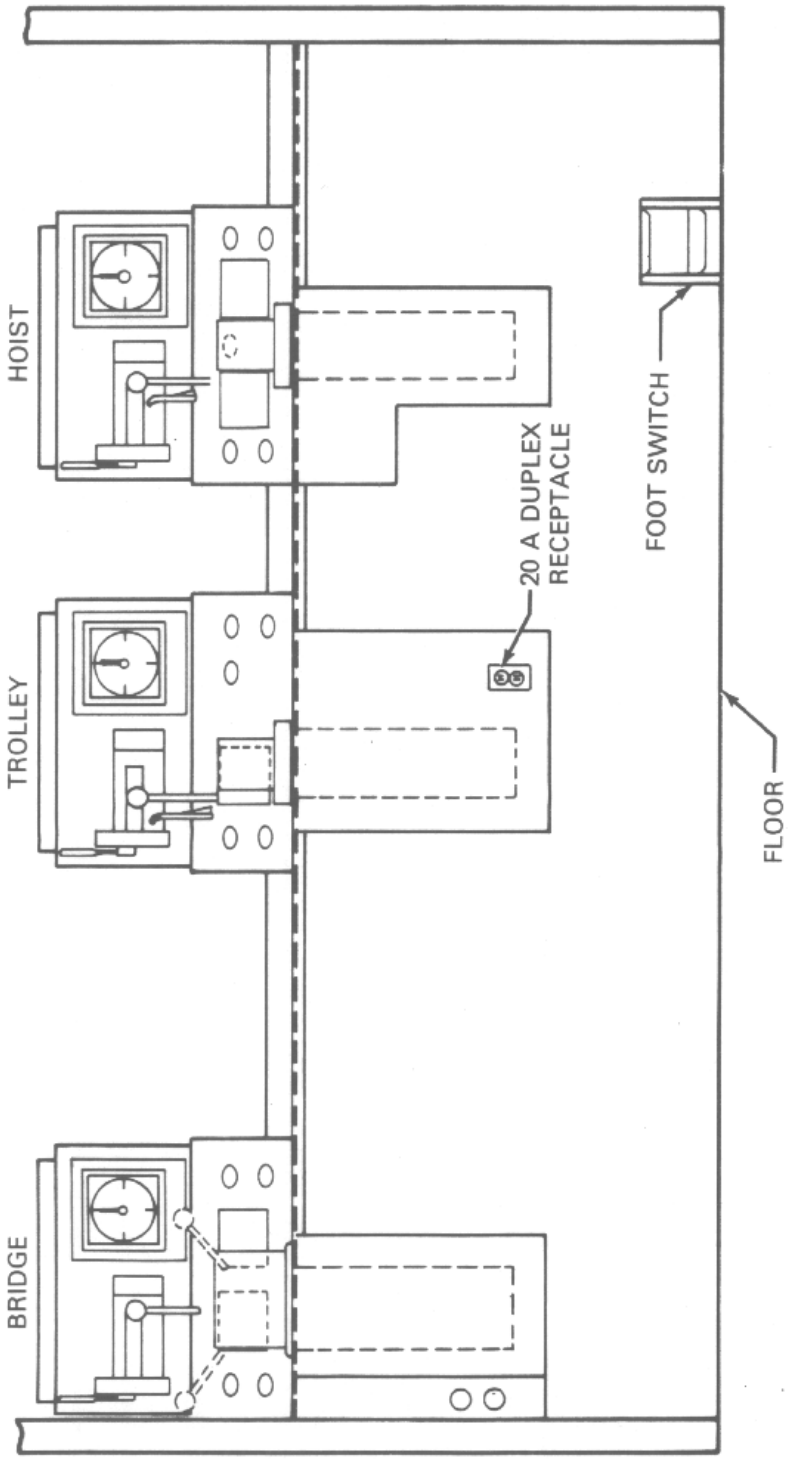


FIGURE 7. CAB CONTROLLER ARRANGEMENT FOR THE 30-TON BRIDGE CRANES IN OPF HIGH BAY 3

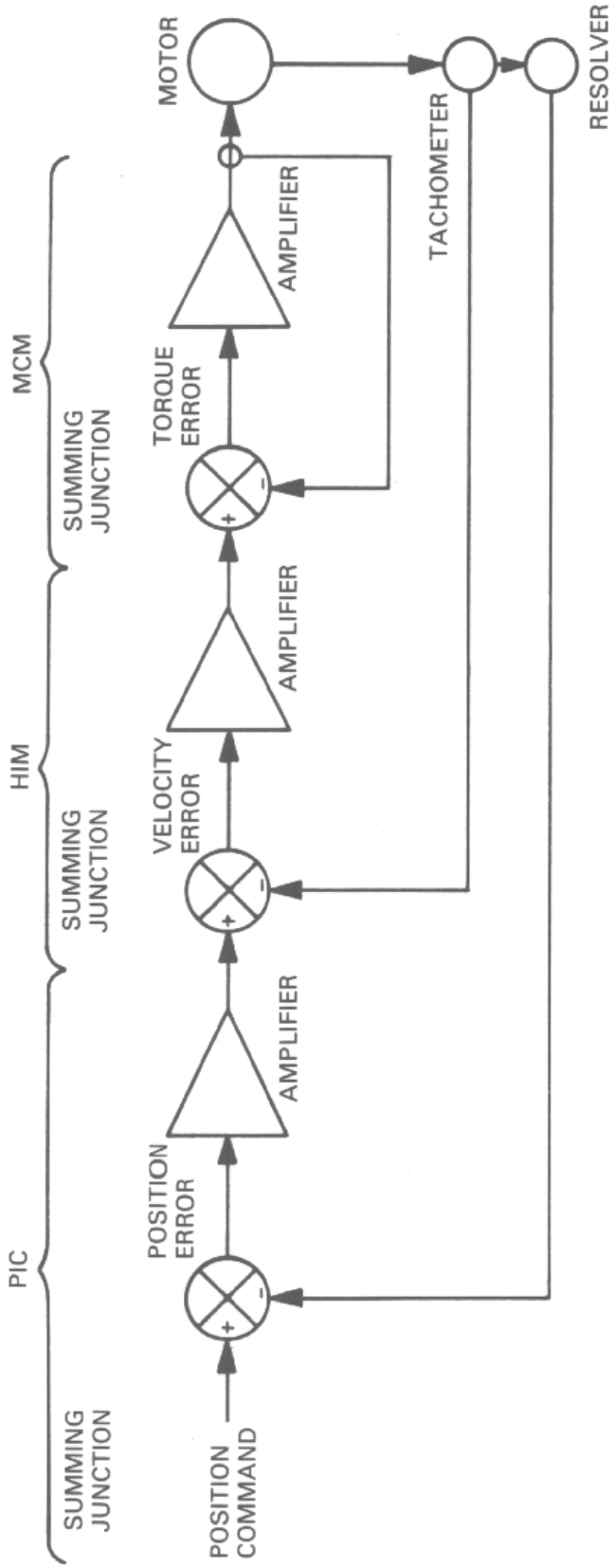


FIGURE 8. HOIST COMPUTER CONTROLLER SYSTEM BLOCK DIAGRAM

## 4.0 CRITICALITY ASSESSMENT

The system functions are identified in figure 9, System Functions Block Diagram, and assessed on the following System Criticality Assessment Summary Sheets (Worksheet 5122-002).

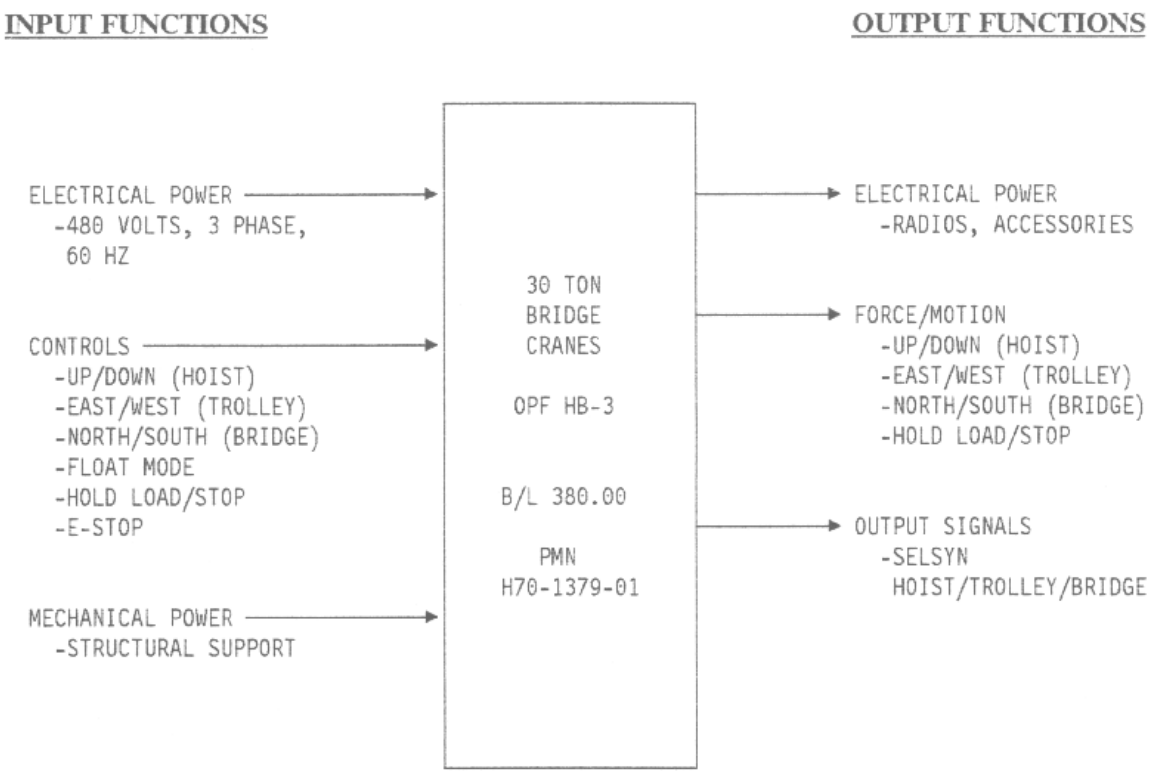


FIGURE 9. SYSTEM FUNCTIONS BLOCK DIAGRAM OF THE 30-TON BRIDGE CRANES, OPF HB-3

Table 3 (Page 1 of 3). **SYSTEM CRITICALITY ASSESSMENT SUMMARY**

**Program Model Number** H70-1379-01
**Baseline Number** 380.00

**System/Subsystem** 30-TON BRIDGE CRANE
**Location** OPF HIGH BAY 3

**Station Set/Facility Code** GD
**Date** MARCH 1991
**Prepared By** P. CLUKEY, LSOC 51-22

| INPUT/OUTPUT | FUNCTION | TIME PERIOD | EFFECT OF LOSS/FAILURE IF:<br>a. FAILS TO OPERATE ON TIME<br>b. FAILS TO CEASE OPERATION ON TIME<br>c. FAILS DURING OPERATION<br>d. PREMATURELY OPERATES | CRIT/ NONCRIT | NOTES |
|---|---|---|---|---|---|
| **INPUT** | | | | | |
| o ELECTRIC POWER<br>- 480 VOLTS, 3 PHASE, 60 HZ AC | SUPPLIES POWER TO OPERATE MOTORS AND BRAKES FOR HOIST, TROLLEY, AND BRIDGE. | DURING CRANE OPER-ATIONS. | a. WOULD DELAY LAUNCH PREPARATIONS OF ORBITER VEHICLE AND/OR PAYLOAD.<br>b. NO EFFECT. SYSTEM CAN BE ISOLATED FROM FACILITY POWER.<br>c. WOULD DELAY LAUNCH PREPARATIONS OF ORBITER VEHICLE AND/OR PAYLOAD.<br>d. NA | a. NC<br>b. NC<br>c. NC<br>d. NC | a. ALL ACTIVE COMPONENTS ARE IN THE OPF HB-3 60 HZ POWER SYSTEM.<br>b. ALL ACTIVE COMPONENTS ARE IN THE OPF HB-3 60 HZ POWER SYSTEM.<br>c. ALL ACTIVE COMPONENTS ARE IN THE OPF HB-3 60 HZ POWER SYSTEM.<br>d. ALL ACTIVE COMPONENTS ARE IN THE OPF HB-3 60 HZ POWER SYSTEM. |
| o CONTROLS<br>- UP/DOWN (HOIST) | OPERATES HOIST IN SPECIFIED DIREC-TION. | AS REQUIRED | a. WILL NOT RAISE OR LOWER LOAD.<br>b. LOAD WOULD CONTINUE TO MOVE IN SPECIFIED DIREC-TION AND COULD RESULT IN DAMAGE TO A VEHICLE SYSTEM.<br>c. LOAD MOTION IN SPECIFIED DIRECTION WOULD CEASE.<br>d. NA | a. NC<br>b. C<br>c. NC<br>d. NC | a. NONE<br>b. SEE FMEA<br>c. NONE<br>d. NONE |
| - EAST/WEST (TROLLEY) | OPERATES TROLLEY IN SPECIFIED DIRECTION. | AS REQUIRED | a. WILL NOT TROLLEY IN SPECIFIED DIRECTION.<br>b. LOAD WILL CONTINUE TO MOVE IN SPECIFIED DIRECTION AND COULD RESULT IN DAMAGE TO A VEHICLE SYSTEM.<br>c. LOAD MOTION IN SPECIFIED DIRECTION WOULD CEASE.<br>d. NA | a. NC<br>b. C<br>c. NC<br>d. NC | a. NONE<br>b. SEE FMEA<br>c. NONE<br>d. NONE |
| - NORTH/SOUTH (BRIDGE) | OPERATES BRIDGE IN SPECIFIED DIRECTION. | AS REQUIRED | a. WILL NOT MOVE BRIDGE IN SPECIFIED DIRECTION.<br>b. LOAD WILL CONTINUE TO MOVE IN SPECIFIED DIRECTION AND COULD RESULT IN DAMAGE TO A VEHICLE SYSTEM.<br>c. LOAD MOTION IN SPECIFIED DIRECTION WOULD CEASE.<br>d. NA | a. NC<br>b. C<br>c. NC<br>d. NC | a. NONE<br>b. SEE FMEA<br>c. NONE<br>d. NONE |
| - FLOAT MODE (HOIST) | ALLOWS PRECISE HOISTING AND LOW-ERING OF LOAD. | AS REQUIRED | a. WILL NOT FLOAT LOAD.<br>b. LOAD WOULD CONTINUE TO MOVE IN SPECIFIED DIREC-TION AND COULD RESULT IN DAMAGE TO A VEHICLE SYSTEM.<br>c. LOAD MOTION IN FLOAT MODE WOULD CEASE.<br>d. NA | a. NC<br>b. C<br>c. NC<br>d. NC | a. NONE<br>b. SEE FMEA<br>c. NONE<br>d. NONE |

Table 3 (Page 2 of 3). **SYSTEM CRITICALITY ASSESSMENT SUMMARY**

**Program Model Number** H70-1379-01
**Baseline Number** 380.00

**System/Subsystem** 30-TON BRIDGE CRANE
**Location** OPF HIGH BAY 3

**Station Set/Facility Code** GD
**Date** MARCH 1991
**Prepared By** P. CLUKEY, LSOC 51-22

| INPUT/OUTPUT | FUNCTION | TIME PERIOD | EFFECT OF LOSS/FAILURE IF:<br>a. FAILS TO OPERATE ON TIME<br>b. FAILS TO CEASE OPERATION ON TIME<br>c. FAILS DURING OPERATION<br>d. PREMATURELY OPERATES | CRIT/ NONCRIT | NOTES |
|---|---|---|---|---|---|
| - HOLD LOAD/STOP (HOIST/TROLLEY/ BRIDGE) | TERMINATES LIFTING/LOWERING AND LATERAL MOTION. | AS REQUIRED | a. UNABLE TO STOP NORMAL OR ABNORMAL CRANE MOTION. POSSIBLE LOSS OF LIFE AND/OR VEHICLE OR DAMAGE TO A VEHICLE SYSTEM.<br>b. WOULD NOT BE ABLE TO MOVE LOAD IN THE DIRECTION SPECIFIED.<br>c. UNABLE TO COMPLETELY STOP NORMAL OR ABNORMAL CRANE MOTION. POSSIBLE LOSS OF LIFE AND/OR VEHICLE OR DAMAGE TO A VEHICLE SYSTEM.<br>d. WOULD NOT BE ABLE TO MOVE LOAD IN THE DIRECTION SPECIFIED. | a. C<br>b. NC<br>c. C<br>d. NC | a. SEE FMEA<br>b. NONE<br>c. SEE FMEA<br>d. NONE |
| - E-STOP (HOIST/TROLLEY/ BRIDGE) | PROVIDES EMERGENCY STOP CAPABILITY. | AS REQUIRED | a. UNABLE TO STOP ABNORMAL CRANE MOTION. POSSIBLE LOSS OF LIFE AND/OR VEHICLE OR DAMAGE TO A VEHICLE SYSTEM.<br>b. UNABLE TO MOVE LOAD IN THE DIRECTION SPECIFIED.<br>c. UNABLE TO STOP ABNORMAL CRANE MOTION. POSSIBLE LOSS OF LIFE AND/OR VEHICLE OR DAMAGE TO A VEHICLE SYSTEM.<br>d. UNABLE TO MOVE LOAD IN THE DIRECTION SPECIFIED. | a. C<br>b. NC<br>c. C<br>d. NC | a. SEE FMEA<br>b. NONE<br>c. NONE<br>d. NONE |
| o MECHANICAL POWER<br>- STRUCTURAL SUPPORT | SUPPORTS 30-TON BRIDGE CRANES | AS REQUIRED | a. NA<br>b. NA<br>c. LOSS OF ABILITY TO SUPPORT 30-TON BRIDGE CRANE<br>d. NA | a. NC<br>b. NC<br>c. C<br>d. NC | a. NONE<br>b. NONE<br>c. FMEA NOT REQUIRED PER NSTS 22206 REV C.<br>d. NONE |
| **OUTPUT** | | | | | |
| o ELECTRICAL POWER | SUPPLY 120 VOLTS AC TO RADIOS AND ACCESSORIES | AS REQUIRED | a. POWER WILL NOT BE SUPPLIED TO RADIOS. CRANE OPERATIONS WILL NOT BEGIN.<br>b. NA<br>c. LOSS OF POWER TO RADIOS. COULD RESULT IN DAMAGE TO A VEHICLE SYSTEM IF REMOTE OPERATOR FAILS TO PRESS E-STOP.<br>d. NA | a. NC<br>b. NC<br>c. C<br>d. NC | a. NONE<br>b. NONE<br>c. SEE FMEA<br>d. NONE |
| o FORCE/MOTION<br>- UP/DOWN (HOIST) | RAISE/LOWER AND POSITION FLIGHT HARDWARE. | AS REQUIRED | a. CAN NOT RAISE OR LOWER THE LOAD.<br>b. LOAD WILL CONTINUE TO MOVE IN SPECIFIED DIRECTION AND COULD RESULT IN DAMAGE TO A VEHICLE SYSTEM.<br>c. LOAD MOTION IN SPECIFIED DIRECTION WOULD CEASE.<br>d. NA | a. NC<br>b. C<br>c. NC<br>d. NC | a. NONE<br>b. SEE FMEA<br>c. NONE<br>d. NONE |

Table 3 (Page 3 of 3). **SYSTEM CRITICALITY ASSESSMENT SUMMARY**

| | | | |
|---|---|---|---|
| **Program Model Number** H70-1379-01<br>**Baseline Number** 380.00 | **System/Subsystem** 30-TON BRIDGE CRANE<br>**Location** OPF HIGH BAY 3 | | **Station Set/Facility Code** GD<br>**Date** MARCH 1991<br>**Prepared By** P. CLUKEY, LSOC 51-22 |

| INPUT/OUTPUT | FUNCTION | TIME PERIOD | EFFECT OF LOSS/FAILURE IF:<br>a. FAILS TO OPERATE ON TIME<br>b. FAILS TO CEASE OPERATION ON TIME<br>c. FAILS DURING OPERATION<br>d. PREMATURELY OPERATES | CRIT/ NONCRIT | NOTES |
|---|---|---|---|---|---|
| - EAST/WEST (TROLLEY) | POSITION FLIGHT HARDWARE. | AS REQUIRED | a. CAN NOT TROLLEY IN SPECIFIED DIRECTION.<br>b. LOAD WILL CONTINUE TO MOVE IN SPECIFIED DIRECTION AND COULD RESULT IN DAMAGE TO A VEHICLE SYSTEM.<br>c. LOAD MOTION IN SPECIFIED DIRECTION WOULD CEASE.<br>d. NA | a. NC<br>b. C<br>c. NC<br>d. NC | a. NONE<br>b. SEE FMEA<br>c. NONE<br>d. NONE |
| - NORTH/SOUTH (BRIDGE) | POSITION FLIGHT HARDWARE. | AS REQUIRED | a. CAN NOT MOVE BRIDGE IN SPECIFIED DIRECTION.<br>b. LOAD WILL CONTINUE TO MOVE IN SPECIFIED DIRECTION AND COULD RESULT IN DAMAGE TO A VEHICLE SYSTEM.<br>c. LOAD MOTION IN SPECIFIED DIRECTION WOULD CEASE.<br>d. NA | a. NC<br>b. C<br>c. NC<br>d. NC | a. NONE<br>b. SEE FMEA<br>c. NONE<br>d. NONE |
| - HOLD LOAD/STOP (HOIST/TROLLEY/ BRIDGE) | STOP AND HOLD LOAD IN FIXED POSITION. | AS REQUIRED | a. UNABLE TO STOP NORMAL OR ABNORMAL CRANE MOTION. POSSIBLE LOSS OF LIFE AND/OR VEHICLE OR DAMAGE TO A VEHICLE SYSTEM.<br>b. WILL NOT BE ABLE TO MOVE LOAD IN THE SPECIFIED DIRECTION.<br>c. UNABLE TO STOP NORMAL OR ABNORMAL CRANE MOTION. POSSIBLE LOSS OF LIFE AND/OR VEHICLE OR DAMAGE TO A VEHICLE SYSTEM.<br>d. WILL NOT BE ABLE TO MOVE LOAD IN THE SPECIFIED DIRECTION. | a. C<br>b. NC<br>c. C<br>d. NC | a. SEE FMEA<br>b. NONE<br>c. SEE FMEA<br>d. NONE |
| o OUTPUT SIGNAL<br>- SELSYN (HOIST/TROLLEY/ BRIDGE) | USED FOR PRE-CISELY DETER-MINING THE SPEED AND DIRECTION OF VARIOUS CRANE MOTION. | DURING CRANE OPERATIONS | a. WOULD FAIL TO INDICATE CRANE MOTION. POSSIBLE DAMAGE TO FLIGHT HARDWARE.<br>b. WOULD INDICATE CRANE MOTION WHEN NONE EXISTED. CRANE OPERATOR WOULD HIT E-STOP FOR MOTION THAT DID NOT EXIST.<br>c. WOULD FAIL TO INDICATE CRANE MOTION. POSSIBLE DAMAGE TO FLIGHT HARDWARE.<br>d. WOULD INDICATE CRANE MOTION WHEN NONE EXISTED. CRANE OPERATOR WOULD HIT E-STOP FOR MOTION THAT DID NOT EXIST. | a. C<br>b. NC<br>c. C<br>d. NC | a. SEE FMEA.<br>b. NONE<br>c. SEE FMEA.<br>d. NONE |

# 5.0 FAILURE MODES AND EFFECTS ANALYSIS (FMEA)

## 5.1 MECHANICAL FMEA

The mechanical components of the critical functions assessed in section 4.0 for this system were identified from the documents and diagrams referenced in the Documentation List and are depicted on the following figure(s) and analyzed in the associated Mechanical FMEA (Worksheet 5122-003). A passive items list precedes the Mechanical FMEA and is shown on the following page (Worksheet 5122-004).

Part numbers for the components of the two cranes are listed as crane 1/crane 2. If a single part number is listed, the part is common to both cranes

**MECHANICAL FAILURE MODES AND EFFECTS ANALYSIS**

**FOR THE**

30-TON BRIDGE CRANE

Bridge Subsystem

PMN H70-1379-01

The following components were considered passive in the analysis for this system.

Table 4. **Mechanical Passive Item List**

| Find Number | Nomenclature |
|---|---|
| C-22126/ C-23714 | Adapter Shaft |
| D-14485 | Floating Shaft |
| D-14486 | Squaring Shaft |
| D-14487 | Squaring Shaft |
| (N/A) | Position Transmitter* |
| (N/A) | Bridge Structure |

*Considered mechanically passive. See electrical FMEA for other Failure modes.

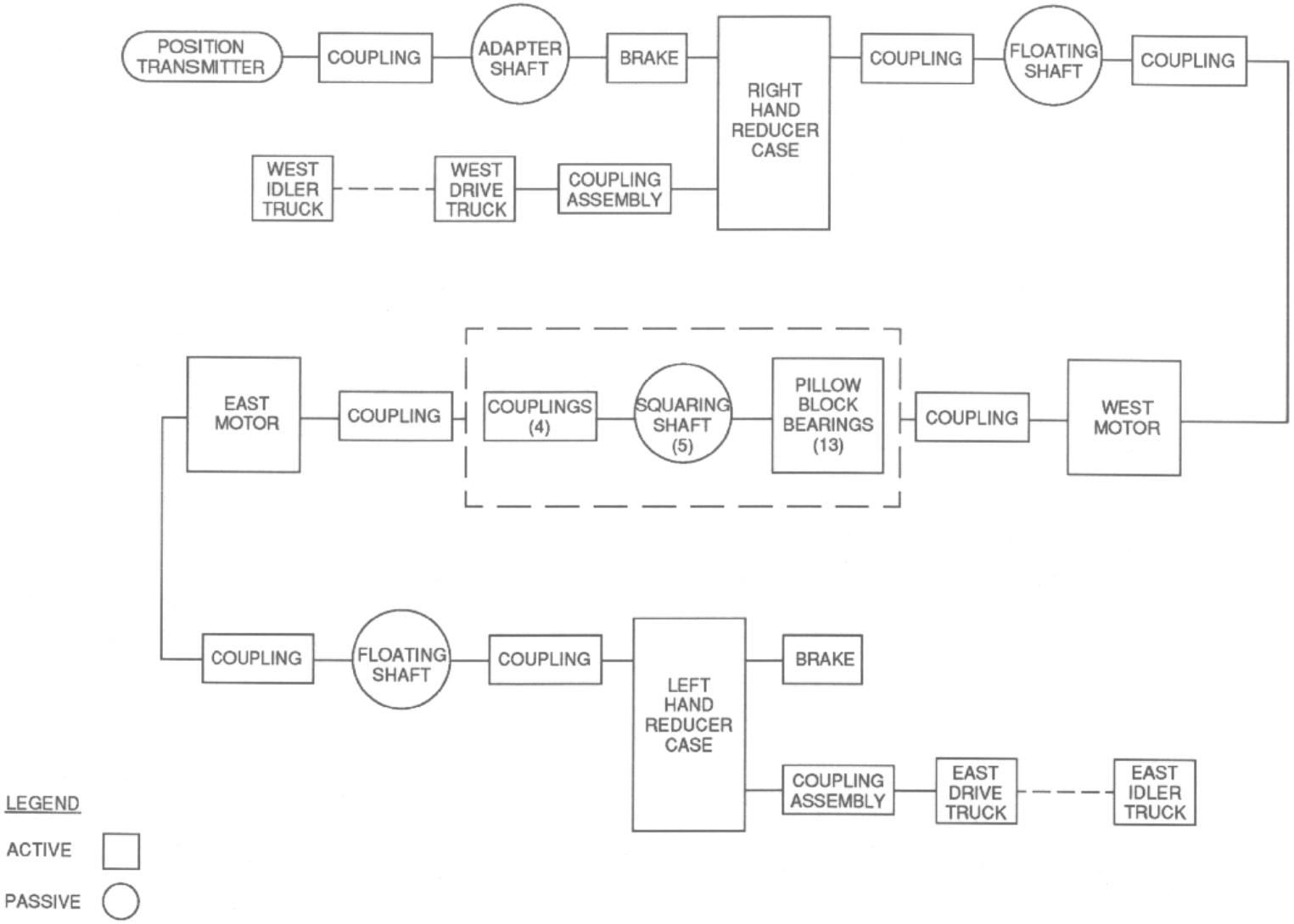


FIGURE 10. BRIDGE DRIVE MECHANICAL POWER FLOW FOR THE 30-TON BRIDGE CRANES IN OPF HIGH BAY THREE

SAA09FY091_007/FIG10_BRIDGE_DRIVE

Table 5 (Page 1 of 5). **MECHANICAL FMEA - BRIDGE**

**System** 30-TON BRIDGE CRANE, OPF-3
**Subsystem** BRIDGE
**Drawing No.** EDERER F-10310, F-10368 **Sheet No.**
**PMN** H70-1379-01

**Program** SPACE SHUTTLE

**Station Set/Facility Code** GD
**Date** MARCH 1991
**Reference Figure Used** 10
**Prepared By** P. CLUKEY, LSOC 51-22

| FIND NO. PART NO. | PART NAME | PART FUNCTION | a. FAILURE MODE<br>b. CAUSE<br>c. FMN<br>d. DETECTION METHOD<br>e. CORRECTING ACTION<br>f. TIME TO EFFECT<br>g. TIMEFRAME | FAILURE EFFECT ON SYSTEM PERFORMANCE | FAILURE EFFECT ON VEHICLE SYSTEMS AND/OR PERSONNEL SAFETY | CRIT CAT |
|---|---|---|---|---|---|---|
| (N/A)<br>A-13731<br>B-17232<br>C-22172 | EAST END IDLER TRUCK IDLER WHEELS BUMPER ASSY. | SUPPORTS AND TRANSLATES BRIDGE, TROLLEY, HOIST AND LOAD ON BRIDGE RAILS. | a. WHEEL WILL NOT TURN | WHEEL CANNOT ROLL. BRIDGE WILL MOVE WITH HESITATION OR NOT AT ALL. DELAY IN OPERATION FOR REPAIR. | NO EFFECT. | 3 |
| (N/A)<br>A-13731<br>B-17231<br>B-17232<br>C-22172 | EAST END DRIVE TRUCK DRIVE WHEEL IDLER WHEEL BUMPER ASSY. | SUPPORTS AND TRANSLATES BRIDGE, TROLLEY, HOIST AND LOAD ON BRIDGE RAILS. | a. GEAR DISENGAGEMENT | LOSS OF BRIDGE EAST DRIVE AND BRIDGE EAST DRIVE TRUCK CON-NECTION TO BRIDGE EAST BRAKE. BRIDGE WEST BRAKE WILL SLOW/STOP BRIDGE TRAVEL. DELAY IN OPERATION FOR REPAIR. | NO EFFECT. | 3 |
| | | | a. WHEEL WILL NOT TURN | WHEEL CANNOT ROLL. DELAY IN OPERATION FOR REPAIR. | NO EFFECT. | 3 |
| (3)<br>C-22121/<br>C-23712 | COUPLING ASSEMBLY (EAST END) | PROVIDES MECHANICAL LINK BETWEEN BRIDGE EAST END GEAR REDUCER AND BRIDGE EAST DRIVE TRUCK. | a. KEY DISENGAGEMENT | NO TORQUE TRANSMITTED TO BRIDGE EAST DRIVE TRUCK. BRIDGE WEST BRAKE WILL SLOW/STOP BRIDGE TRAVEL. DELAY IN OPERATION FOR REPAIR. | NO EFFECT. | 3 |
| (1)<br>SDN-160/<br>2060Y3-L | GEAR REDUCER (EAST) | TRANSMITS TORQUE FROM BRIDGE EAST MOTOR AND BRAKE TO BRIDGE EAST DRIVE TRUCK. | a. GEAR DISENGAGEMENT | LOSS OF BRIDGE EAST DRIVE AND BRIDGE EAST DRIVE TRUCK CON-NECTION TO BRIDGE EAST BRAKE. BRIDGE WEST BRAKE WILL SLOW/STOP BRIDGE TRAVEL. DELAY IN OPERATION FOR REPAIR. | NO EFFECT. | 3 |
| (N/A)<br>DS9516 | BRAKE (EAST) | PROVIDES TORQUE TO SLOW/STOP BRIDGE TRAVEL. | a. FAILS TO RELEASE | LOSS OF ABILITY TO MOVE BRIDGE. DELAY IN OPERATION FOR REPAIR. | NO EFFECT | 3 |

Table 5 (Page 2 of 5). **MECHANICAL FMEA - BRIDGE**

**System** 30-TON BRIDGE CRANE, OPF-3
**Subsystem** BRIDGE
**Drawing No.** EDERER F-10310, F-10368 **Sheet No.**
**PMN** H70-1379-01

**Program** SPACE SHUTTLE

**Station Set/Facility Code** GD
**Date** MARCH 1991
**Reference Figure Used** 10
**Prepared By** P. CLUKEY, LSOC 51-22

| FIND NO. PART NO. | PART NAME | PART FUNCTION | a. FAILURE MODE<br>b. CAUSE<br>c. FMN<br>d. DETECTION METHOD<br>e. CORRECTING ACTION<br>f. TIME TO EFFECT<br>g. TIMEFRAME | FAILURE EFFECT ON SYSTEM PERFORMANCE | FAILURE EFFECT ON VEHICLE SYSTEMS AND/OR PERSONNEL SAFETY | CRIT CAT |
|---|---|---|---|---|---|---|
| | | | a. FAILS TO ENGAGE | LOSS OF TORQUE FROM EAST BRAKE TO SLOW/STOP BRIDGE TRAVEL. WEST BRAKE WILL SLOW/STOP BRIDGE. DELAY IN OPERATIONS FOR REPAIR. | NO EFFECT | 3 |
| (10) C-22127/ C-23713 | BRAKE WHEEL (EAST) | PROVIDES TORQUE TO SLOW/STOP BRIDGE TRAVEL. | a. KEY DISENGAGEMENT | LOSS OF TORQUE FROM EAST BRAKE TO SLOW/STOP BRIDGE TRAVEL. WEST BRAKE WILL SLOW/STOP BRIDGE. DELAY IN OPERATIONS FOR REPAIR. | NO EFFECT | 3 |
| (12) L050 | COUPLING (POSITION TRANS-MITTER) | PROVIDES MECHANICAL LINK BETWEEN BRAKE WHEEL ADAPTER SHAFT AND POSI-TION TRANSMITTER. | a. KEY DISENGAGEMENT | LOSS OF POSITION FEEDBACK TO CAB DISPLAY. MOTION IN CLOSE PROX-IMITY OF FLIGHT HARDWARE WILL BE 'JOGGED' OR AT EXTREMELY SLOW SPEED. OBSERVER WITH REMOTE E-STOP WILL WARN OF POSSIBLE CONTACT. CAB AMMETERS WILL INDI-CATE ANY MOTOR CURRENT. | NO EFFECT | 3 |
| | | | a. SET SCREW DISENGAGE-MENT | LOSS OF POSITION FEEDBACK TO CAB DISPLAY. MOTION IN CLOSE PROX-IMITY OF FLIGHT HARDWARE WILL BE 'JOGGED' OR AT EXTREMELY SLOW SPEED. OBSERVER WITH REMOTE E-STOP WILL WARN OF POSSIBLE CONTACT. CAB AMMETERS WILL INDI-CATE ANY MOTOR CURRENT. | NO EFFECT | 3 |
| (4) FS-101 1/4 | COUPLING (WEST SIDE OF EAST GEAR REDUCER) | PROVIDES MECHANICAL LINK BETWEEN BRIDGE EAST FLOATING SHAFT AND BRIDGE WEST (RIGHT HAND MODEL) GEAR REDUCER. | a. KEY DISENGAGEMENT | NO TORQUE TRANSMITTED TO EAST BRIDGE GEAR REDUCER. DELAY IN OPERATION FOR REPAIR. | NO EFFECT. | 3 |

Table 5 (Page 3 of 5). **MECHANICAL FMEA - BRIDGE**

**System** 30-TON BRIDGE CRANE, OPF-3
**Subsystem** BRIDGE
**Drawing No.** EDERER F-10310, F-10368 **Sheet No.**
**PMN** H70-1379-01

**Program** SPACE SHUTTLE

**Station Set/Facility Code** GD
**Date** MARCH 1991
**Reference Figure Used** 10
**Prepared By** P. CLUKEY, LSOC 51-22

| FIND NO. PART NO. | PART NAME | PART FUNCTION | a. FAILURE MODE<br>b. CAUSE<br>c. FMN<br>d. DETECTION METHOD<br>e. CORRECTING ACTION<br>f. TIME TO EFFECT<br>g. TIMEFRAME | FAILURE EFFECT ON SYSTEM PERFORMANCE | FAILURE EFFECT ON VEHICLE SYSTEMS AND/OR PERSONNEL SAFETY | CRIT CAT |
|---|---|---|---|---|---|---|
| (4)<br>FS-101 1/4 | COUPLING (EAST SIDE OF EAST MOTOR) | PROVIDES MECHANICAL LINK BETWEEN BRIDGE EAST MOTOR AND WEST END OF BRIDGE EAST FLOATING SHAFT. | a. KEY DISENGAGEMENT | NO TORQUE TRANSMITTED TO EAST BRIDGE GEAR REDUCER. DELAY IN OPERATION FOR REPAIR. | NO EFFECT. | 3 |
| NONE<br>CD2813ATZ | EAST MOTOR | PROVIDE TORQUE TO DRIVE/SLOW BRIDGE | a. FAILS TO OPERATE | LOSS OF ABILITY FOR EAST MOTOR TO DRIVE/SLOW BRIDGE. WEST MOTOR WILL PROVIDE TORQUE TO DRIVE/SLOW BRIDGE. | NO EFFECT | 3 |
| (4)<br>FS-101 1/4 | COUPLING (WEST SIDE OF EAST MOTOR) | PROVIDES MECHANICAL LINK BETWEEN BRIDGE EAST MOTOR AND SQUARING SHAFT. | a. KEY DISENGAGEMENT | NO TORQUE TRANSMITTED FROM EAST TO WEST ENDS OF BRIDGE AND VICE VERSA. BRIDGE MAY NOT STAY SQUARE ON RAILS. DELAY IN OPERATION FOR REPAIR. | NO EFFECT. | 3 |
| (6)<br>SKF SYRS 115E/<br>PKE-B22431H | PILLOW / BLOCK BEARINGS (SQUARING SHAFT) | PROVIDES SUPPORT TO BRIDGE SQUARING SHAFT AS IT CONNECTS BRIDGE MOTORS. | a. BEARING SEIZES | SQUARING SHAFT WILL NOT TURN, PREVENTING BRIDGE FROM MOVING. DELAY IN OPERATION FOR REPAIR. | NO EFFECT. | 3 |
| | | | a. BEARING FAILS | SQUARING SHAFT NOT SUPPORTED BY BEARING, REQUIRING OTHER BEARINGS TO BEAR SHAFT WEIGHT. SQUARING SHAFT WILL STILL TURN. DELAY IN OPERATION FOR REPAIR. | NO EFFECT. | 3 |
| (5)<br>FR-101 1/4 | COUPLING (SQUARING SHAFT) | PROVIDES MECHANICAL LINK BETWEEN SECTIONS OF SQUARING SHAFT. | a. KEY DISENGAGEMENT | NO TORQUE TRANSMITTED FROM EAST TO WEST ENDS OF BRIDGE AND VICE VERSA. BRIDGE MAY NOT STAY SQUARE WITH RAILS. DELAY IN OPERATION FOR REPAIR. | NO EFFECT. | 3 |
| (4)<br>FS-101 1/4 | COUPLING (EAST SIDE OF WEST MOTOR) | PROVIDES MECHANICAL LINK BETWEEN BRIDGE WEST MOTOR AND SQUARING SHAFT. | a. KEY DISENGAGEMENT | NO TORQUE TRANSMITTED FROM WEST TO EAST ENDS OF BRIDGE AND VICE VERSA. BRIDGE MAY NOT STAY SQUARE ON RAILS. DELAY IN OPERATION FOR REPAIR. | NO EFFECT. | 3 |

Table 5 (Page 4 of 5). **MECHANICAL FMEA - BRIDGE**

**System** 30-TON BRIDGE CRANE, OPF-3
**Subsystem** BRIDGE
**Drawing No.** EDERER F-10310, F-10368 **Sheet No.**
**PMN** H70-1379-01

**Program** SPACE SHUTTLE

**Station Set/Facility Code** GD
**Date** MARCH 1991
**Reference Figure Used** 10
**Prepared By** P. CLUKEY, LSOC 51-22

| FIND NO. PART NO. | PART NAME | PART FUNCTION | a. FAILURE MODE<br>b. CAUSE<br>c. FMN<br>d. DETECTION METHOD<br>e. CORRECTING ACTION<br>f. TIME TO EFFECT<br>g. TIMEFRAME | FAILURE EFFECT ON SYSTEM PERFORMANCE | FAILURE EFFECT ON VEHICLE SYSTEMS AND/OR PERSONNEL SAFETY | CRIT CAT |
|---|---|---|---|---|---|---|
| NONE<br>CD2813ATZ | WEST MOTOR | PROVIDE TORQUE TO DRIVE/SLOW BRIDGE. | a. FAILS TO OPERATE | LOSS OF ABILITY FOR WEST MOTOR TO DRIVE/SLOW BRIDGE. EAST MOTOR WILL PROVIDE TORQUE TO DRIVE/SLOW BRIDGE. | NO EFFECT. | 3 |
| (4)<br>FS-101 1/4 | COUPLING (WEST SIDE OF WEST MOTOR) | PROVIDES MECHANICAL LINK BETWEEN BRIDGE WEST MOTOR AND EAST END OF BRIDGE WEST FLOATING SHAFT. | a. KEY DISENGAGEMENT | NO TORQUE TRANSMITTED TO WEST BRIDGE GEAR REDUCER. DELAY IN OPERATION FOR REPAIR. | NO EFFECT. | 3 |
| (4)<br>FS-101 1/4 | COUPLING (EAST SIDE OF WEST GEAR REDUCER) | PROVIDES MECHANICAL LINK BETWEEN BRIDGE WEST FLOATING SHAFT AND BRIDGE WEST (LEFT HAND MODEL) GEAR REDUCER. | a. KEY DISENGAGEMENT | NO TORQUE TRANSMITTED TO WEST BRIDGE GEAR REDUCER. DELAY IN OPERATION FOR REPAIR. | NO EFFECT. | 3 |
| (2)<br>SDN-160/<br>2060Y3-L | GEAR REDUCER (WEST) | TRANSMITS TORQUE FROM BRIDGE WEST MOTOR AND BRAKE TO BRIDGE WEST DRIVE TRUCK. | a. GEAR DISENGAGEMENT | LOSS OF BRIDGE WEST DRIVE AND BRIDGE WEST DRIVE TRUCK CONNECTION TO BRIDGE WEST BRAKE. BRIDGE EAST BRAKE WILL SLOW/STOP BRIDGE TRAVEL. DELAY IN OPERATION FOR REPAIR. | NO EFFECT. | 3 |
| (N/A)<br>DS9516 | BRAKE (WEST) | PROVIDE TORQUE TO SLOW/STOP BRIDGE TRAVEL. | a. FAILS TO RELEASE | LOSS OF ABILITY TO MOVE BRIDGE. DELAY IN OPERATION FOR REPAIR. | NO EFFECT | 3 |
| | | | a. FAILS TO ENGAGE | LOSS OF TORQUE FROM WEST BRAKE TO SLOW/STOP BRIDGE TRAVEL. EAST BRAKE WILL SLOW/STOP BRIDGE. DELAY IN OPERATIONS FOR REPAIR. | NO EFFECT | 3 |
| (10)<br>C-22127/<br>C-23713 | BRAKE WHEEL (WEST) | PROVIDES TORQUE TO SLOW/STOP BRIDGE TRAVEL. | a. KEY DISENGAGEMENT | LOSS OF TORQUE FROM WEST BRAKE TO SLOW/STOP BRIDGE TRAVEL. EAST BRAKE WILL SLOW/STOP BRIDGE. DELAY IN OPERATIONS FOR REPAIR. | NO EFFECT | 3 |

Table 5 (Page 5 of 5). **MECHANICAL FMEA - BRIDGE**

**System** 30-TON BRIDGE CRANE, OPF-3
**Subsystem** BRIDGE
**Drawing No.** EDERER F-10310, F-10368 **Sheet No.**
**PMN** H70-1379-01

**Program** SPACE SHUTTLE

**Station Set/Facility Code** GD
**Date** MARCH 1991
**Reference Figure Used** 10
**Prepared By** P. CLUKEY, LSOC 51-22

| FIND NO. PART NO. | PART NAME | PART FUNCTION | a. FAILURE MODE<br>b. CAUSE<br>c. FMN<br>d. DETECTION METHOD<br>e. CORRECTING ACTION<br>f. TIME TO EFFECT<br>g. TIMEFRAME | FAILURE EFFECT ON SYSTEM PERFORMANCE | FAILURE EFFECT ON VEHICLE SYSTEMS AND/OR PERSONNEL SAFETY | CRIT CAT |
|---|---|---|---|---|---|---|
| (3)<br>C-22121/<br>C-23712 | COUPLING ASSEMBLY (WEST END) | PROVIDES MECHANICAL LINK BETWEEN BRIDGE WEST END GEAR REDUCER AND BRIDGE WEST DRIVE TRUCK. | a. KEY DISENGAGEMENT | NO TORQUE TRANSMITTED TO BRIDGE WEST DRIVE TRUCK. BRIDGE EAST BRAKE WILL SLOW/STOP BRIDGE TRAVEL. DELAY IN OPERATION FOR REPAIR. | NO EFFECT. | 3 |
| (N/A)<br>A-13731<br>B-17231<br>B-17232<br>C-22172 | WEST END DRIVE TRUCK DRIVE WHEEL IDLER WHEEL BUMPER ASSY. | SUPPORTS AND TRANSLATES BRIDGE, TROLLEY, HOIST AND LOAD ON BRIDGE RAILS. | a. GEAR DISENGAGEMENT | LOSS OF BRIDGE WEST DRIVE AND BRIDGE WEST DRIVE TRUCK CONNECTION TO BRIDGE WEST BRAKE. BRIDGE EAST BRAKE WILL SLOW/STOP BRIDGE TRAVEL. DELAY IN OPERATION FOR REPAIR. | NO EFFECT. | 3 |
| | | | a. WHEEL WILL NOT TURN | BRIDGE WILL MOVE WITH HESITATION OR NOT AT ALL. DELAY IN OPERATION FOR REPAIR. | NO EFFECT. | 3 |
| (N/A)<br>A-13731<br>B-17232<br>C-22172 | WEST END IDLER TRUCK IDLER WHEELS BUMPER ASSY. | SUPPORTS AND TRANSLATES BRIDGE, TROLLEY, HOIST AND LOAD ON BRIDGE RAILS. | a. WHEEL WILL NOT TURN | WHEEL CANNOT ROLL. BRIDGE WILL MOVE WITH HESITATION OR NOT AT ALL. DELAY IN OPERATION FOR REPAIR. | NO EFFECT. | 3 |



SAA09FY091-007

**MECHANICAL FAILURE MODES AND EFFECTS ANALYSIS**

**FOR THE**

30-TON BRIDGE CRANE

Trolley Subsystem

PMN H70-1379-01

The following components were considered passive in the analysis for this system.

Table 6. **Mechanical Passive Item List**

| Find Number | Nomenclature |
|---|---|
| D-14510 | Floating Shaft |
| C-22162/ C-23885 | Adapter Shaft |
| B-17240 | Drip Pan |
| (N/A) | Position Transmitter* |
| (N/A) | Trolley Structure |

*Considered mechanically passive. See electrical FMEA for other Failure modes.

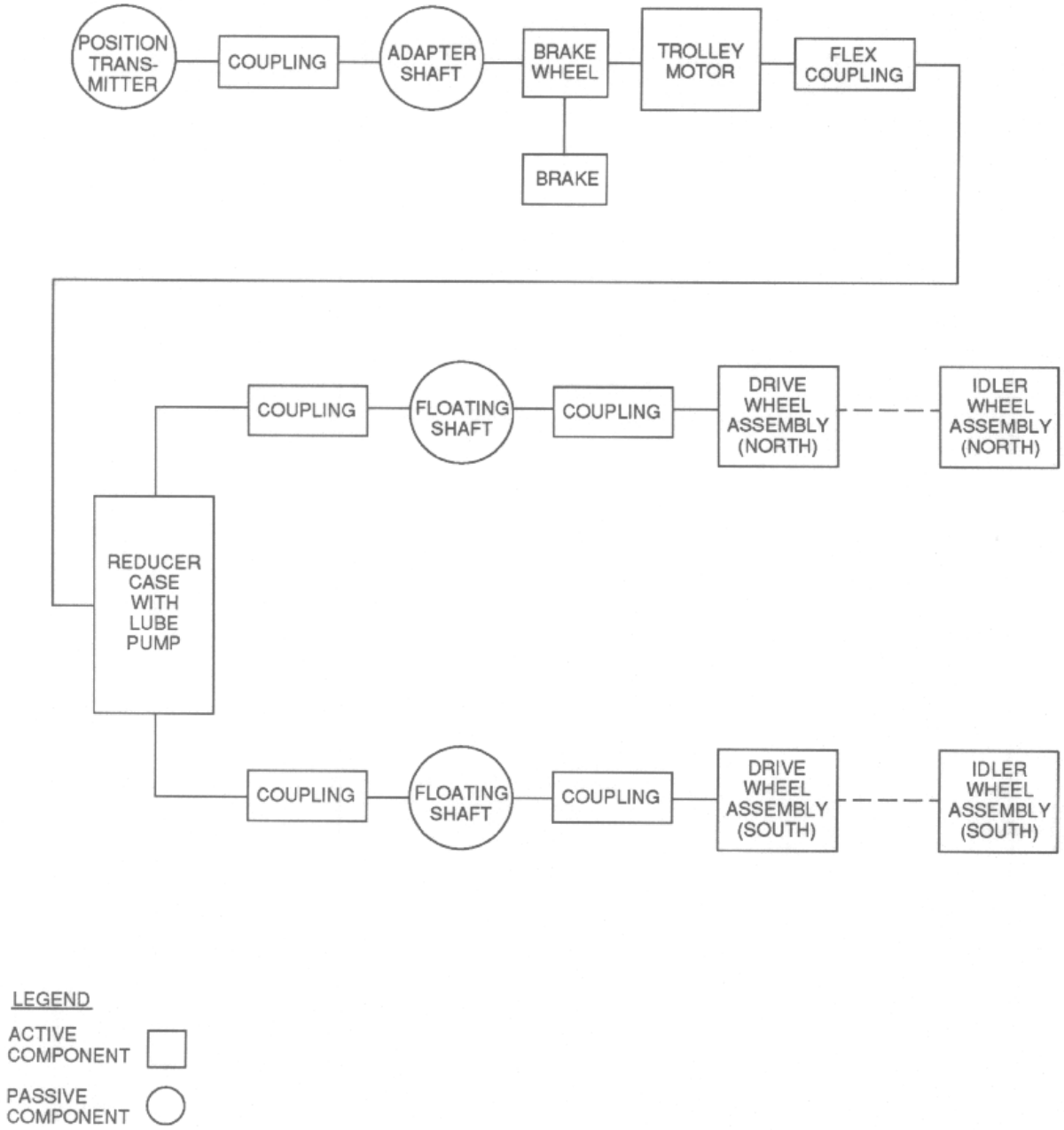


FIGURE 11. TROLLEY DRIVE MECHANICAL POWER FLOW FOR THE 30-TON BRIDGE CRANES IN OPF HIGH BAY THREE

Table 7 (Page 1 of 3). **MECHANICAL FMEA - TROLLEY**

**System** 30-TON BRIDGE CRANE, OPF-3
**Subsystem** TROLLEY
**Drawing No.** EDERER A-13726, A-14546 **Sheet No.**
**PMN** H70-1379-01

**Program** SPACE SHUTTLE

**Station Set/Facility Code** GD
**Date** MARCH 1991
**Reference Figure Used** 11
**Prepared By** P. CLUKEY, LSOC 51-22

| FIND NO. PART NO. | PART NAME | PART FUNCTION | a. FAILURE MODE<br>b. CAUSE<br>c. FMN<br>d. DETECTION METHOD<br>e. CORRECTING ACTION<br>f. TIME TO EFFECT<br>g. TIMEFRAME | FAILURE EFFECT ON SYSTEM PERFORMANCE | FAILURE EFFECT ON VEHICLE SYSTEMS AND/OR PERSONNEL SAFETY | CRIT CAT |
|---|---|---|---|---|---|---|
| (7)<br>D-14511 | COUPLING (POSITION TRANS-MITTER) | PROVIDES MECHANICAL LINK BETWEEN BRAKE WHEEL ADAPTER SHAFT AND POSI-TION TRANSMITTER. | a. KEY DISENGAGEMENT | LOSS OF POSITION FEEDBACK TO CAB DISPLAY. MOVEMENT IN CLOSE PROXITMITY OF FLIGHT HARDWARE WILL BE 'JOGGED' OR AT EXTREMELY SLOW SPEED. OBSERVER WITH REMOTE E-STOP WILL WARN OF POS-SIBLE CONTACT. CAB AMMETERS WILL INDICATE ANY MOTOR CURRENT. | NO EFFECT | 3 |
| | | | a. SET SCREW DISENGAGE-MENT | LOSS OF POSITION FEEDBACK TO CAB DISPLAY. MOVEMENT IN CLOSE PROXITMITY OF FLIGHT HARDWARE WILL BE 'JOGGED' OR AT EXTREMELY SLOW SPEED. OBSERVER WITH REMOTE E-STOP WILL WARN OF POS-SIBLE CONTACT. CAB AMMETERS WILL INDICATE ANY MOTOR CURRENT. | NO EFFECT | 3 |
| (5)<br>C-22162/<br>C-23875 | BRAKE WHEEL | PROVIDES TORQUE TO SLOW/ STOP TROLLEY TRAVEL. | a. KEY DISENGAGEMENT | APPLYING/SETTING TROLLEY BRAKE WILL NOT SLOW/STOP TROLLEY MOVE-MENT. LOSS OF TROLLEY MOMENTUM DUE TO FRICTION AND OPERATIONAL PROCEDURES WHICH REQUIRE THE USE OF THE SLOW SPEED NEAR THE VEHICLE, EQUIPMENT AND STRUC-TURES WILL PREVENT COLLISIONS WITH THE LOAD. DELAY IN OPERA-TION FOR REPAIR. | NO EFFECT | 3 |
| (N/A)<br>DS9516 | BRAKE | PROVIDES TORQUE TO SLOW/STOP TROLLEY TRAVEL. | a. FAILS TO RELEASE | LOSS OF ABILITY TO MOVE TROLLEY. DELAY IN OPERATION FOR REPAIR. | NO EFFECT | 3 |

Table 7 (Page 2 of 3). **MECHANICAL FMEA - TROLLEY**

**System** 30-TON BRIDGE CRANE, OPF-3
**Subsystem** TROLLEY
**Drawing No.** EDERER A-13726, A-14546 **Sheet No.**
**PMN** H70-1379-01

**Program** SPACE SHUTTLE

**Station Set/Facility Code** GD
**Date** MARCH 1991
**Reference Figure Used** 11
**Prepared By** P. CLUKEY, LSOC 51-22

| FIND NO. PART NO. | PART NAME | PART FUNCTION | a. FAILURE MODE<br>b. CAUSE<br>c. FMN<br>d. DETECTION METHOD<br>e. CORRECTING ACTION<br>f. TIME TO EFFECT<br>g. TIMEFRAME | FAILURE EFFECT ON SYSTEM PERFORMANCE | FAILURE EFFECT ON VEHICLE SYSTEMS AND/OR PERSONNEL SAFETY | CRIT CAT |
|---|---|---|---|---|---|---|
| | | | a. FAILS TO SET | APPLYING/SETTING TROLLEY BRAKE WILL NOT SLOW/STOP TROLLEY MOVEMENT. LOSS OF TROLLEY MOMENTUM DUE TO FRICTION AND OPERATIONAL PROCEDURES WHICH REQUIRE THE USE OF THE SLOW SPEED NEAR THE VEHICLE, EQUIPMENT AND STRUCTURES WILL PREVENT COLLISIONS WITH THE LOAD. DELAY IN OPERATION FOR REPAIR. | NO EFFECT | 3 |
| NONE CD219ATY | TROLLEY MOTOR | PROVIDES TORQUE TO DRIVE/SLOW TROLLEY. | a. FAILS TO OPERATE | LOSS OF ABILITY TO MOVE TROLLEY. DELAY IN OPERATION FOR REPAIR. | NO EFFECT. | 3 |
| (2) F-101 1/2 / F-201 1/2 | COUPLING | PROVIDES MECHANICAL LINK BETWEEN TROLLEY MOTOR AND TROLLEY GEAR REDUCER. | a. KEY DISENGAGEMENT | APPLYING/SETTING TROLLEY BRAKE WILL NOT SLOW/STOP TROLLEY MOVEMENT. LOSS OF TROLLEY MOMENTUM DUE TO FRICTION AND OPERATIONAL PROCEDURES WHICH REQUIRE THE USE OF THE SLOW SPEED NEAR THE VEHICLE, EQUIPMENT AND STRUCTURES WILL PREVENT COLLISIONS WITH THE LOAD. DELAY IN OPERATION FOR REPAIR. | NO EFFECT | 3 |
| (1) 9173 RH-DO | GEAR REDUCER | TRANSMITS TORQUE FROM TROLLEY MOTOR TO TROLLEY DRIVE SHAFTS. | a. GEAR DISENGAGEMENT | APPLYING/SETTING TROLLEY BRAKE WILL NOT SLOW/STOP TROLLEY MOVEMENT. LOSS OF TROLLEY MOMENTUM DUE TO FRICTION AND OPERATIONAL PROCEDURES WHICH REQUIRE THE USE OF THE SLOW SPEED NEAR THE VEHICLE, EQUIPMENT AND STRUCTURES WILL PREVENT COLLISIONS WITH THE LOAD. DELAY IN OPERATION FOR REPAIR. | NO EFFECT | 3 |

Table 7 (Page 3 of 3). **MECHANICAL FMEA - TROLLEY**

**System** 30-TON BRIDGE CRANE, OPF-3
**Subsystem** TROLLEY
**Drawing No.** EDERER A-13726, A-14546 **Sheet No.**
**PMN** H70-1379-01

**Program** SPACE SHUTTLE

**Station Set/Facility Code** GD
**Date** MARCH 1991
**Reference Figure Used** 11
**Prepared By** P. CLUKEY, LSOC 51-22

| FIND NO. PART NO. | PART NAME | PART FUNCTION | a. FAILURE MODE<br>b. CAUSE<br>c. FMN<br>d. DETECTION METHOD<br>e. CORRECTING ACTION<br>f. TIME TO EFFECT<br>g. TIMEFRAME | FAILURE EFFECT ON SYSTEM PERFORMANCE | FAILURE EFFECT ON VEHICLE SYSTEMS AND/OR PERSONNEL SAFETY | CRIT CAT |
|---|---|---|---|---|---|---|
| (3) F-102 1/2 / F-201 1/2 | COUPLING (NORTH SIDE OF GEAR REDUCER) | PROVIDES MECHANICAL LINK BETWEEN TROLLEY GEAR REDUCER AND TROLLEY NORTH DRIVE SHAFT. | a. KEY DISENGAGEMENT | APPLYING/SETTING TROLLEY BRAKE WILL RESULT IN BRAKING ONLY WITH THE SOUTH DRIVE SHAFT AND WHEEL. DELAY IN OPERATION FOR REPAIR. | NO EFFECT | 3 |
| (3) F-102 1/2 / F-201 1/2 | COUPLING (SOUTH SIDE OF GEAR REDUCER) | PROVIDES MECHANICAL LINK BETWEEN TROLLEY GEAR REDUCER AND TROLLEY SOUTH DRIVE SHAFT. | a. KEY DISENGAGEMENT | APPLYING/SETTING TROLLEY BRAKE WILL RESULT IN BRAKING ONLY WITH THE NORTH DRIVE SHAFT AND WHEEL. DELAY IN OPERATION FOR REPAIR. | NO EFFECT | 3 |
| (3) F-102 1/2 / F-201 1/2 | COUPLING (NEXT TO NORTH DRIVE WHEEL) | PROVIDES MECHANICAL LINK BETWEEN TROLLEY NORTH DRIVE SHAFT AND TROLLEY NORTH DRIVE WHEEL. | a. KEY DISENGAGEMENT | APPLYING/SETTING TROLLEY BRAKE WILL RESULT IN BRAKING ONLY WITH THE SOUTH DRIVE WHEEL. DELAY IN OPERATION FOR REPAIR. | NO EFFECT | 3 |
| (3) F-102 1/2 / F-201 1/2 | COUPLING (NEXT TO SOUTH DRIVE WHEEL) | PROVIDES MECHANICAL LINK BETWEEN TROLLEY SOUTH DRIVE SHAFT AND TROLLEY SOUTH DRIVE WHEEL. | a. KEY DISENGAGEMENT | APPLYING/SETTING TROLLEY BRAKE WILL RESULT IN BRAKING ONLY WITH THE NORTH DRIVE WHEEL. DELAY IN OPERATION FOR REPAIR. | NO EFFECT | 3 |
| (N/A) B-17254 | TROLLEY DRIVE WHEEL ASSEMBLY (NORTH AND SOUTH) | SUPPORTS AND TRANSLATES TROLLEY, HOIST, AND LOAD ON TROLLEY RAILS. | a. WHEEL WILL NOT TURN | WHEEL CANNOT ROLL OR TROLLEY WILL MOVE WITH HESITATION OR NOT AT ALL. DELAY IN OPERATION FOR REPAIR. | NO EFFECT | 3 |
| (N/A) B-17255 | TROLLEY IDLER WHEEL ASSEMBLY (NORTH AND SOUTH) | SUPPORTS AND TRANSLATES TROLLEY, HOIST, AND LOAD ON TROLLEY RAILS. | a. WHEEL WILL NOT TURN | WHEEL CANNOT ROLL OR TROLLEY WILL MOVE WITH HESITATION OR NOT AT ALL. DELAY IN OPERATION FOR REPAIR. | NO EFFECT | 3 |

**MECHANICAL FAILURE MODES AND EFFECTS ANALYSIS**

**FOR THE**

30-TON BRIDGE CRANE

Hoist Subsystem

PMN H70-1379-01

The following components were considered passive in the analysis for this system.

Table 8. **Mechanical Passive Item List**

| Find Number | Nomenclature |
|---|---|
| A-13727 | Lower Block Assembly |
| A-13730 | Drum Shaft |
| B-17259/ B-18155 | Wire Rope Drum |
| A-13728 | Upper Block |
| C-22173 | Wire Rope |
| **TACH/RESOLV/SELSYN ASSEMBLY** | |
| (N/A) | Selsyn Transmitter* 2JA33-BB1 |
| (N/A) | Feedback Transducer* 36-306-308 |
| (N/A) | Tachometer* 5BC46AB1582 |
| C-22164 | Adapter Shaft |
| **OVERSPEED SWITCH/LIMIT SWITCH ASSEMBLY** | |
| C-22223 | Sprocket |

*Considered mechanically passive. See electrical FMEA for other Failure modes.

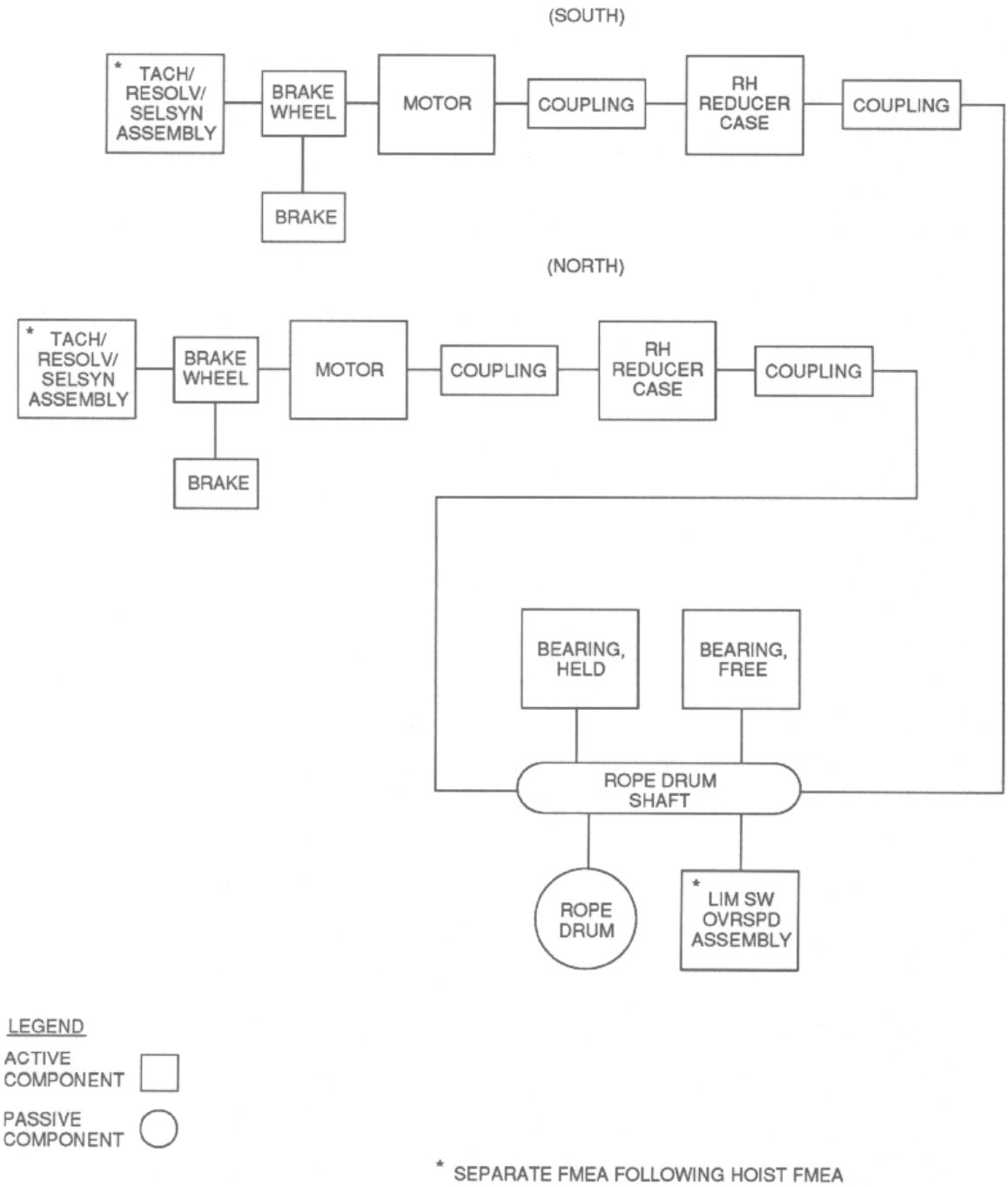


LEGEND

ACTIVE COMPONENT □

PASSIVE COMPONENT ○

* SEPARATE FMEA FOLLOWING HOIST FMEA

FIGURE 12. HOIST MECHANICAL POWER FLOW FOR THE 30-TON BRIDGE CRANES IN OPF HIGH BAY THREE

Table 9 (Page 1 of 4). **MECHANICAL FMEA - HOIST**

**System** 30-TON BRIDGE CRANE, OPF-3
**Subsystem** HOIST
**Drawing No.** EDERER A-13725, A-13725 **Sheet No.**
**PMN** H70-1379-01

**Program** SPACE SHUTTLE

**Station Set/Facility Code** GD
**Date** MARCH 1991
**Reference Figure Used** 12
**Prepared By** P. CLUKEY, LSOC 51-22

| FIND NO. PART NO. | PART NAME | PART FUNCTION | a. FAILURE MODE<br>b. CAUSE<br>c. FMN<br>d. DETECTION METHOD<br>e. CORRECTING ACTION<br>f. TIME TO EFFECT<br>g. TIMEFRAME | FAILURE EFFECT ON SYSTEM PERFORMANCE | FAILURE EFFECT ON VEHICLE SYSTEMS AND/OR PERSONNEL SAFETY | CRIT CAT |
|---|---|---|---|---|---|---|
| (9)<br>C-22163/<br>C-23826 | BRAKE WHEEL (NORTH) | PROVIDES TORQUE TO HOLD LOAD. | a. KEY DISENGAGES<br>b. STRUCTURAL FAILURE<br>c. 09FY091-007.001<br>d. VISUAL<br>e. NONE<br>f. IMMEDIATE<br>g. NA | LOSS OF ABILITY FOR NORTH BRAKE TO HOLD LOAD. SOUTH BRAKE, SOUTH MOTOR, AND NORTH MOTOR WILL CONTROL LOAD. PIC WILL DETECT TACHOMETER OR DRIVE IMBALANCE WHEN NORTH DRIVE TAKES UP BACKLASH AND TORSIONAL DEFLECTION. PIC WILL SHUT DOWN HOIST. | REQUIRES FAILURE IN SOUTH MOTOR/BRAKE LOAD PATH TO LOSE CONTROL OF LOAD. COULD CAUSE LOSS OF LIFE OR VEHICLE. | 1R |
| (N/A)<br>DS9528-C101 | BRAKE (NORTH) | PROVIDES TORQUE TO HOLD LOAD. | a. FAILS TO ENGAGE<br>b. STUCK, WORN, OR GLAZED<br>c. 09FY091-007.002<br>d. VISUAL<br>e. NONE<br>f. IMMEDIATE<br>g. NA | LOSS OF ABILITY FOR NORTH BRAKE TO HOLD LOAD. SOUTH BRAKE, SOUTH MOTOR, AND NORTH MOTOR WILL CONTROL LOAD. PIC WILL DETECT TACHOMETER OR DRIVE IMBALANCE WHEN NORTH DRIVE TAKES UP BACKLASH AND TORSIONAL DEFLECTION. PIC WILL SHUT DOWN HOIST. | REQUIRES FAILURE IN SOUTH MOTOR/BRAKE LOAD PATH TO LOSE CONTROL OF LOAD. COULD CAUSE LOSS OF LIFE OR VEHICLE. | 1R |
| | | | a. FAILS TO RELEASE | LOSS OF ABILITY TO RAISE/LOWER LOAD. DELAY IN OPERATION FOR REPAIR. | NO EFFECT | 3 |
| NONE<br>CD2813AT | NORTH MOTOR | PROVIDES TORQUE TO LIFT/LOWER/HOLD LOAD. | a. FAILS TO OPERATE | TORQUE WILL NOT BE PROVED AND HOIST WILL NOT RUN. | NO EFFECT | 3 |
| (10)<br>F101 1/2 /<br>F-201 1/2 | COUPLING (NORTH MOTOR) | PROVIDES MECHANICAL LINK BETWEEN NORTH MOTOR SHAFT AND LH REDUCER. | a. KEY DISENGAGES<br>b. STRUCTURAL FAILURE<br>c. 09FY091-007.003<br>d. VISUAL<br>e. NONE<br>f. IMMEDIATE<br>g. NA | LOSS OF ABILITY FOR NORTH MOTOR TO RAISE/LOWER LOAD AND FOR NORTH BRAKE TO HOLD LOAD. SOUTH MOTOR AND BRAKE WILL STILL CONTROL LOAD. PIC WILL DETECT MOTOR IMBALANCE AND SHUT DOWN HOIST. | REQUIRES FAILURE IN SOUTH MOTOR/BRAKE LOAD PATH TO LOSE CONTROL OF LOAD. COULD CAUSE LOSS OF LIFE OR VEHICLE. | 1R |

Table 9 (Page 2 of 4). **MECHANICAL FMEA - HOIST**

**System** 30-TON BRIDGE CRANE, OPF-3
**Subsystem** HOIST
**Drawing No.** EDERER A-13725, A-13725 **Sheet No.**
**PMN** H70-1379-01

**Program** SPACE SHUTTLE

**Station Set/Facility Code** GD
**Date** MARCH 1991
**Reference Figure Used** 12
**Prepared By** P. CLUKEY, LSOC 51-22

| FIND NO. PART NO. | PART NAME | PART FUNCTION | a. FAILURE MODE<br>b. CAUSE<br>c. FMN<br>d. DETECTION METHOD<br>e. CORRECTING ACTION<br>f. TIME TO EFFECT<br>g. TIMEFRAME | FAILURE EFFECT ON SYSTEM PERFORMANCE | FAILURE EFFECT ON VEHICLE SYSTEMS AND/OR PERSONNEL SAFETY | CRIT CAT |
|---|---|---|---|---|---|---|
| (1)<br>SDN-250 | LH REDUCER (NORTH) | TRANSMITS TORQUE FROM NORTH MOTOR AND BRAKE TO NORTH DRUM SHAFT COUPLING. | a. GEAR DISENGAGES<br>b. STRUCTURAL FAILURE<br>c. 09FY091-007.004<br>d. VISUAL<br>e. NONE<br>f. IMMEDIATE<br>g. NA | LOSS OF ABILITY FOR NORTH MOTOR TO RAISE/LOWER LOAD AND FOR NORTH BRAKE TO HOLD LOAD. SOUTH MOTOR AND BRAKE WILL STILL CONTROL LOAD. PIC WILL DETECT MOTOR IMBALANCE AND SHUT DOWN HOIST. | REQUIRES FAILURE IN SOUTH MOTOR/BRAKE LOAD PATH TO LOSE CONTROL OF LOAD. COULD CAUSE LOSS OF LIFE OR VEHICLE. | 1R |
| (3)<br>C-22090/<br>C-23884 | COUPLING (NORTH END OF DRUM SHAFT) | TRANSMITS TORQUE FROM LH REDUCER TO DRUM SHAFT. | a. KEY DISENGAGES<br>b. STRUCTURAL FAILURE<br>c. 09FY091-007.005<br>d. VISUAL<br>e. NONE<br>f. IMMEDIATE<br>g. NA | LOSS OF ABILITY FOR NORTH MOTOR TO RAISE/LOWER LOAD AND FOR NORTH BRAKE TO HOLD LOAD. SOUTH MOTOR AND BRAKE WILL STILL CONTROL LOAD. PIC WILL DETECT MOTOR IMBALANCE AND SHUT DOWN HOIST. | REQUIRES FAILURE IN SOUTH MOTOR/BRAKE LOAD PATH TO LOSE CONTROL OF LOAD. COULD CAUSE LOSS OF LIFE OR VEHICLE. | 1R |
| (4)<br>SKF SAFS<br>22224 | BEARING, FREE (PILLOW BLOCK) | SUPPORTS AND HOLD DRUM SHAFT IN PLACE WHILE ALLOWING IT TO ROTATE FREELY. | a. BEARING SEIZES | WIRE ROPE DRUM WILL CEASE TO ROTATE. DELAY IN OPERATION FOR REPAIR. | NO EFFECT. | 3 |
| (5)<br>SKF SAFS<br>22224 W/SR | BEARING, HELD (PILLOW BLOCK) | SUPPORTS AND HOLD DRUM SHAFT IN PLACE WHILE ALLOWING IT TO ROTATE FREELY. | a. BEARING SEIZES | WIRE ROPE DRUM WILL CEASE TO ROTATE. DELAY IN OPERATION FOR REPAIR. | NO EFFECT. | 3 |
| (3)<br>C-22090/<br>C-23884 | COUPLING (SOUTH END OF DRUM SHAFT) | TRANSMITS TORQUE FROM RH REDUCER TO DRUM SHAFT | a. KEY DISENGAGES<br>b. STRUCTURAL FAILURE<br>c. 09FY091-007.006<br>d. VISUAL<br>e. NONE<br>f. IMMEDIATE<br>g. NA | LOSS OF ABILITY FOR SOUTH MOTOR TO RAISE/LOWER LOAD AND FOR SOUTH BRAKE TO HOLD LOAD. NORTH MOTOR AND BRAKE WILL CONTROL LOAD. PIC WILL DETECT MOTOR IMBALANCE AND SHUT DOWN HOIST. | REQUIRES FAILURE IN NORTH MOTOR/BRAKE LOAD PATH TO LOSE CONTROL OF LOAD. COULD CAUSE LOSS OF LIFE OR VEHICLE. | 1R |

Table 9 (Page 3 of 4). **MECHANICAL FMEA - HOIST**

**System** 30-TON BRIDGE CRANE, OPF-3
**Subsystem** HOIST
**Drawing No.** EDERER A-13725, A-13725 **Sheet No.**
**PMN** H70-1379-01

**Program** SPACE SHUTTLE

**Station Set/Facility Code** GD
**Date** MARCH 1991
**Reference Figure Used** 12
**Prepared By** P. CLUKEY, LSOC 51-22

| FIND NO. PART NO. | PART NAME | PART FUNCTION | a. FAILURE MODE<br>b. CAUSE<br>c. FMN<br>d. DETECTION METHOD<br>e. CORRECTING ACTION<br>f. TIME TO EFFECT<br>g. TIMEFRAME | FAILURE EFFECT ON SYSTEM PERFORMANCE | FAILURE EFFECT ON VEHICLE SYSTEMS AND/OR PERSONNEL SAFETY | CRIT CAT |
|---|---|---|---|---|---|---|
| (2)<br>SDN-250 | RH REDUCER (SOUTH) | TRANSMITS TORQUE FROM SOUTH MOTOR AND BRAKE TO SOUTH DRUM SHAFT COUPLING. | a. GEAR DISENGAGES<br>b. STRUCTURAL FAILURE<br>c. 09FY091-007.007<br>d. VISUAL<br>e. NONE<br>f. IMMEDIATE<br>g. NA | LOSS OF ABILITY FOR SOUTH MOTOR TO RAISE/LOWER LOAD AND FOR SOUTH BRAKE TO HOLD LOAD. NORTH MOTOR AND BRAKE WILL CONTROL LOAD. PIC WILL DETECT MOTOR IMBALANCE AND SHUT DOWN HOIST. | REQUIRES FAILURE IN NORTH MOTOR/BRAKE LOAD PATH TO LOSE CONTROL OF LOAD. COULD CAUSE LOSS OF LIFE OR VEHICLE. | 1R |
| (10)<br>F-101 1/2 /<br>F-201 1/2 | COUPLING (SOUTH MOTOR) | TRANSMITS TORQUE FROM SOUTH MOTOR SHAFT AND RH REDUCER | a. KEY DISENGAGES<br>b. STRUCTURAL FAILURE<br>c. 09FY091-007.008<br>d. VISUAL<br>e. NONE<br>f. IMMEDIATE<br>g. NA | LOSS OF ABILITY FOR SOUTH MOTOR TO RAISE/LOWER LOAD AND FOR SOUTH BRAKE TO HOLD LOAD. NORTH MOTOR AND BRAKE WILL CONTROL LOAD. PIC WILL DETECT MOTOR IMBALANCE AND SHUT DOWN HOIST. | REQUIRES FAILURE IN NORTH MOTOR/BRAKE LOAD PATH TO LOSE CONTROL OF LOAD. COULD CAUSE LOSS OF LIFE OR VEHICLE. | 1R |
| NONE<br>CD2813AT | SOUTH MOTOR | PROVIDES TORQUE TO LIFT/LOWER/HOLD LOAD. | a. FAILS TO OPERATE | TORQUE WILL NOT BE PROVED AND HOIST WILL NOT RUN. | NO EFFECT. | 3 |
| (9)<br>C-22163/<br>C-23826 | BRAKE WHEEL (SOUTH) | PROVIDES TORQUE TO SLOW/STOP HOIST TRAVEL. | a. KEY DISENGAGES<br>b. STRUCTURAL FAILURE<br>c. 09FY091-007.009<br>d. VISUAL<br>e. NONE<br>f. IMMEDIATE<br>g. NA | LOSS OF ABILITY FOR SOUTH BRAKE TO HOLD LOAD. NORTH BRAKE, NORTH MOTOR, AND SOUTH MOTOR WILL CONTROL LOAD. PIC WILL DETECT TACHOMETER OR DRIVE IMBALANCE WHEN SOUTH DRIVE TAKES UP BACKLASH AND TORSIONAL DEFLECTION. PIC WILL SHUT DOWN HOIST. | REQUIRES FAILURE IN NORTH MOTOR/BRAKE LOAD PATH TO LOSE CONTROL OF LOAD. COULD CAUSE LOSS OF LIFE OR VEHICLE. | 1R |
| (N/A)<br>DS9528-C101 | BRAKE (SOUTH) | PROVIDES TORQUE TO SLOW/STOP HOIST TRAVEL WHEN DE-ENERGIZED. | a. FAILS TO SET<br>b. STUCK, WORN, OR GLAZED<br>c. 09FY091-007.010<br>d. VISUAL<br>e. NONE<br>f. IMMEDIATE<br>g. NA | LOSS OF ABILITY FOR SOUTH BRAKE TO HOLD LOAD. NORTH BRAKE, NORTH MOTOR, AND SOUTH MOTOR WILL CONTROL LOAD. PIC WILL DETECT TACHOMETER OR DRIVE IMBALANCE WHEN SOUTH DRIVE TAKES UP BACKLASH AND TORSIONAL DEFLECTION. PIC WILL SHUT DOWN HOIST. | REQUIRES FAILURE IN NORTH MOTOR/BRAKE LOAD PATH TO LOSE CONTROL OF LOAD. COULD CAUSE LOSS OF LIFE OR VEHICLE. | 1R |

Table 9 (Page 4 of 4). **MECHANICAL FMEA - HOIST**

**System** 30-TON BRIDGE CRANE, OPF-3
**Subsystem** HOIST
**Drawing No.** EDERER A-13725, A-13725 **Sheet No.**
**PMN** H70-1379-01

**Program** SPACE SHUTTLE

**Station Set/Facility Code** GD
**Date** MARCH 1991
**Reference Figure Used** 12
**Prepared By** P. CLUKEY, LSOC 51-22

| FIND NO. PART NO. | PART NAME | PART FUNCTION | a. FAILURE MODE<br>b. CAUSE<br>c. FMN<br>d. DETECTION METHOD<br>e. CORRECTING ACTION<br>f. TIME TO EFFECT<br>g. TIMEFRAME | FAILURE EFFECT ON SYSTEM PERFORMANCE | FAILURE EFFECT ON VEHICLE SYSTEMS AND/OR PERSONNEL SAFETY | CRIT CAT |
|---|---|---|---|---|---|---|
| | | | a. FAILS TO RELEASE | LOSS OF ABILITY TO RAISE/LOWER LOAD. DELAY IN OPERATION FOR REPAIR. | NO EFFECT. | 3 |
| (8)<br>C-22188 | EQUALIZER BAR | PIVOTS TO DISTRIBUTE LOAD BETWEEN BOTH WIRE ROPES. | a. FAILS TO PIVOT | EQUALIZER BAR WILL NOT DISTRIBUTE LOAD EVENLY. SINGLE WIRE ROPE AND GEARTRAIN WILL HOLD LOAD. | NO EFFECT | 3 |
| (14)<br>B-17282 | SHOCK ABSORBER ASSEMBLY | CONTROL PIVOT SPEED OF EQUALIZER BAR IN THE EVENT OF SINGLE WIRE ROPE FAILURE. | a. SEAL FAILS | SHOCK ABSORBER WILL NOT DAMPEN EQUALIZER BAR MOTION, INCREASING IMPACT LOAD ON REMAINING WIRE ROPE AND GEARTRAIN. DOUBLE FAILURE REQUIRED. | NO EFFECT | 3 |

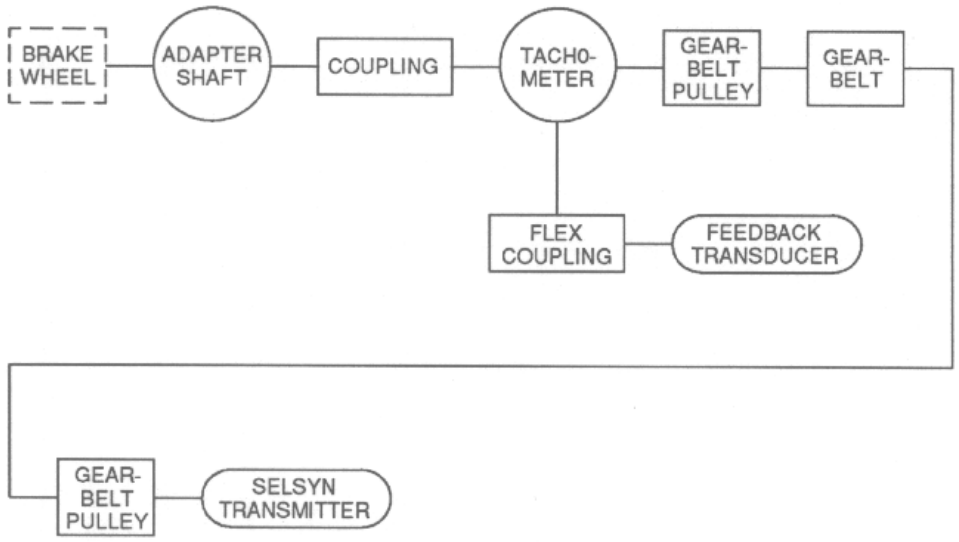


LEGEND

ACTIVE COMPONENT □

PASSIVE COMPONENT ○

FIGURE 13. TACH/SELSYN/FEEDBACK ASSEMBLY FOR HOIST SYSTEM OF THE 30-TON BRIDGE CRANES IN OPF HIGH BAY THREE

## Table 10. MECHANICAL FMEA - HOIST TACH/RESOLV/SELSYN

**System** 30-TON BRIDGE CRANE, OPF-3
**Subsystem** HOIST TACH/RESOLV/SELSYN
**Drawing No.** EDERER B-17301 **Sheet No.**
**PMN** H70-1379-01

**Program** SPACE SHUTTLE

**Station Set/Facility Code** GD
**Date** MARCH 1991
**Reference Figure Used** 13
**Prepared By** P. CLUKEY, LSOC 51-22

| FIND NO. PART NO. | PART NAME | PART FUNCTION | a. FAILURE MODE b. CAUSE c. FMN d. DETECTION METHOD e. CORRECTING ACTION f. TIME TO EFFECT g. TIMEFRAME | FAILURE EFFECT ON SYSTEM PERFORMANCE | FAILURE EFFECT ON VEHICLE SYSTEMS AND/OR PERSONNEL SAFETY | CRIT CAT |
|---|---|---|---|---|---|---|
| (5) 16LF050 | GEARBELT PULLEY (SELSYN) | TRANSMITS TORQUE FROM GEARBELT TO SELSYN TRANSMITTER. | a. SET SCREW DISENGAGES | LOSS OF HOIST POSITION INFORMATION FROM SELSYN SYSTEM. MOTION IN CLOSE PROXIMITY OF FLIGHT HARDWARE WILL BE 'JOGGED' OR AT EXTREMELY SLOW SPEED. OBSERVER WITH REMOTE E-STOP WILL WARN OF POSSIBLE CONTACT. CAB AMMETERS WILL INDICATE ANY MOTOR CURRENT. | NO EFFECT | 3 |
| (6) 210L050 | GEARBELT | PROVIDES MECHANICAL LINK BETWEEN TACHOMETER PULLEY AND SELSYN PULLEY. | a. BELT DISENGAGES | LOSS OF HOIST POSITION INFORMATION FROM SELSYN SYSTEM. MOTION IN CLOSE PROXIMITY OF FLIGHT HARDWARE WILL BE 'JOGGED' OR AT EXTREMELY SLOW SPEED. OBSERVER WITH REMOTE E-STOP WILL WARN OF POSSIBLE CONTACT. CAB AMMETERS WILL INDICATE ANY MOTOR CURRENT. | NO EFFECT | 3 |
| (4) D-14562 | GEARBELT PULLEY (TACHOMETER) | TRANSMITS TORQUE FROM TACHOMETER SHAFT TO GEARBELT. | a. KEY DISENGAGES | LOSS OF HOIST POSITION INFORMATION FROM SELSYN SYSTEM. MOTION IN CLOSE PROXIMITY OF FLIGHT HARDWARE WILL BE 'JOGGED' OR AT EXTREMELY SLOW SPEED. OBSERVER WITH REMOTE E-STOP WILL WARN OF POSSIBLE CONTACT. CAB AMMETERS WILL INDICATE ANY MOTOR CURRENT. | NO EFFECT | 3 |
| (8) 5804 | FLEXIBLE COUPLING (FEEDBACK TRANSDUCER) | TRANSMITS TORQUE FROM TACHOMETER SHAFT TO FEEDBACK TRANSDUCER. | a. COUPLING DISENGAGES | LOSS OF POSITION FEEDBACK TO PIC. PIC WILL SHUTDOWN HOIST OPERATION. DELAY IN OPERATION FOR REPAIR. | NO EFFECT | 3 |
| (7) MODEL 2 | FLEXIBLE COUPLING | TRANSMITS TORQUE FROM BRAKE WHEEL ADAPTER SHAFT TO TACHOMETER SHAFT. | a. COUPLING DISENGAGES | LOSS OF TACHOMETER, RESOLVER AND SELSYN FEEDBACK. PIC WILL SENSE TACHOMETER AND RESOLVER LOSS AND SHUTDOWN HOIST. DELAY IN OPERATION FOR REPAIR. | NO EFFECT | 3 |

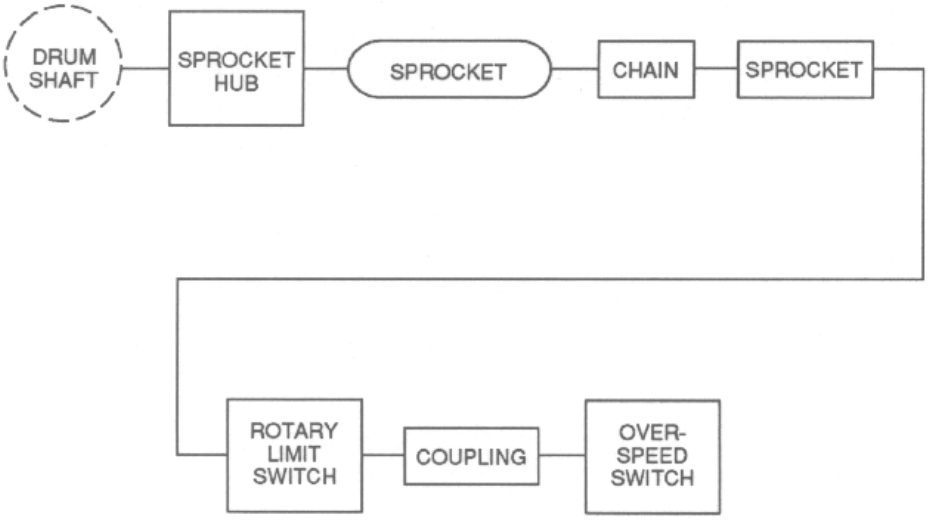


LEGEND

ACTIVE COMPONENT

PASSIVE COMPONENT

FIGURE 14. OVERSPEED SWITCH/LIMIT SWITCH ASSEMBLY FOR THE HOIST SYSTEM OF THE 30-TON BRIDGE CRANES IN OPF HIGH BAY THREE

Table 11 (Page 1 of 2). **MECHANICAL FMEA - HOIST OVERSPEED ASSEMBLY**

**System** 30-TON BRIDGE CRANE, OPF-3
**Subsystem** HOIST OVERSPEED ASSEMBLY
**Drawing No.** EDERER B-17312 **Sheet No.**
**PMN** H70-1379-01

**Program** SPACE SHUTTLE

**Station Set/Facility Code** GD
**Date** MARCH 1991
**Reference Figure Used** 14
**Prepared By** P. CLUKEY, LSOC 51-22

| FIND NO. PART NO. | PART NAME | PART FUNCTION | a. FAILURE MODE<br>b. CAUSE<br>c. FMN<br>d. DETECTION METHOD<br>e. CORRECTING ACTION<br>f. TIME TO EFFECT<br>g. TIMEFRAME | FAILURE EFFECT ON SYSTEM PERFORMANCE | FAILURE EFFECT ON VEHICLE SYSTEMS AND/OR PERSONNEL SAFETY | CRIT CAT |
|---|---|---|---|---|---|---|
| (5)<br>C-22222 | SPROCKET HUB (DRUM SHAFT) | TRANSMITS TORQUE FROM DRUM SHAFT TO CHAIN DRIVING LIMIT SWITCH AND OVERSPEED SWITCH. | a. KEY DISENGAGES | LOSS OF INPUT TO GEARED LIMIT SWITCH AND MECHANICAL OVER-SPEED SWITCH. LOAD BLOCK MAY BE LOWERED ONTO FLOOR. DAMAGE TO HOIST GEARBOX AND WIRE ROPE COULD RESULT IN LOAD BEING DROPPED IF UPPER WEIGHT LIMIT SWITCH FAILS TO STOP HOIST. DOUBLE FAILURE REQUIRED. LOSS OF OVERSPEED CONTROL IF ELECTRONIC OVERSPEED CIRCUIT ALSO FAILS. POSSIBLE DAMAGE TO FLIGHT HARDWARE. DOUBLE FAILURE REQUIRED. | NO EFFECT. | 3 |
| (6)<br>40LL | CHAIN | TRANSMITS TORQUE FROM DRUM SHAFT SPROCKET TO LIMIT SWITCH SPROCKET. | a. CHAIN DISENGAGES | LOSS OF INPUT TO GEARED LIMIT SWITCH AND MECHANICAL OVER-SPEED SWITCH. LOAD BLOCK MAY BE LOWERED ONTO FLOOR. DAMAGE TO HOIST GEARBOX AND WIRE ROPE COULD RESULT IN LOAD BEING DROPPED IF UPPER WEIGHT LIMIT SWITCH FAILS TO STOP HOIST. DOUBLE FAILURE REQUIRED. LOSS OF OVERSPEED CONTROL IF ELECTRONIC OVERSPEED CIRCUIT ALSO FAILS. POSSIBLE DAMAGE TO FLIGHT HARDWARE. DOUBLE FAILURE REQUIRED. | NO EFFECT. | 3 |

Table 11 (Page 2 of 2). **MECHANICAL FMEA - HOIST OVERSPEED ASSEMBLY**

**System** 30-TON BRIDGE CRANE, OPF-3
**Subsystem** HOIST OVERSPEED ASSEMBLY
**Drawing No.** EDERER B-17312 **Sheet No.**
**PMN** H70-1379-01

**Program** SPACE SHUTTLE

**Station Set/Facility Code** GD
**Date** MARCH 1991
**Reference Figure Used** 14
**Prepared By** P. CLUKEY, LSOC 51-22

| FIND NO. PART NO. | PART NAME | PART FUNCTION | a. FAILURE MODE<br>b. CAUSE<br>c. FMN<br>d. DETECTION METHOD<br>e. CORRECTING ACTION<br>f. TIME TO EFFECT<br>g. TIMEFRAME | FAILURE EFFECT ON SYSTEM PERFORMANCE | FAILURE EFFECT ON VEHICLE SYSTEMS AND/OR PERSONNEL SAFETY | CRIT CAT |
|---|---|---|---|---|---|---|
| (3)<br>40B19 | SPROCKET (LIMIT SWITCH) | TRANSMITS TORQUE FROM CHAIN TO ROTARY LIMIT SWITCH. | a. KEY DISENGAGES | LOSS OF INPUT TO GEARED LIMIT SWITCH AND MECHANICAL OVER-SPEED SWITCH. LOAD BLOCK MAY BE LOWERED ONTO FLOOR. DAMAGE TO HOIST GEARBOX AND WIRE ROPE COULD RESULT IN LOAD BEING DROPPED IF UPPER WEIGHT LIMIT SWITCH FAILS TO STOP HOIST. DOUBLE FAILURE REQUIRED. LOSS OF OVERSPEED CONTROL IF ELECTRONIC OVERSPEED CIRCUIT ALSO FAILS. POSSIBLE DAMAGE TO FLIGHT HARDWARE. DOUBLE FAILURE REQUIRED. | NO EFFECT. | 3 |
| N/A<br>CR115E-126122 | ROTARY LIMIT SWITCH | PROVIDES OVERDRIVE PRO-TECTION FOR HOIST IN THE UP AND DOWN DIRECTION. | a. GEAR DISENGAGES | ROTARY LIMIT SWITCH WOULD NOT PREVENT LOAD BLOCK FROM BEING LOWERED ONTO THE FLOOR OR FROM BEING TWO-BLOCKED. DAMAGE TO HOIST GEARBOX AND WIRE ROPE COULD RESULT IN LOAD BEING DROPPED IF HOIST UPPER WEIGHT LIMIT SWITCH FAILS TO STOP HOIST. DOUBLE FAILURE REQUIRED. | NO EFFECT | 3 |
| (7)<br>D-14524 | COUPLING (OVERSPEED SWITCH) | TRANSMIT TORQUE FROM ROTARY LIMIT SWITCH SHAFT TO OVERSPEED SWITCH. | a. KEY DISENGAGES | LOSS OF OVERSPEED CONTROL IF ELECTRONIC OVERSPEED CIRCUIT ALSO FAILS. POSSIBLE DAMAGE TO FLIGHT HARDWARE. DOUBLE FAILURE REQUIRED. | NO EFFECT. | 3 |
| N/A<br>2210-14266135 | OVERSPEED SWITCH | PROVIDES OVERSPEED DETECTION FOR HOIST IN THE UP AND DOWN DIREC-TION. | a. FLYWEIGHTS FROZEN | LOSS OF OVERSPEED CONTROL IF ELECTRONIC OVERSPEED CIRCUIT ALSO FAILS. POSSIBLE DAMAGE TO FLIGHT HARDWARE. DOUBLE FAILURE REQUIRED. | NO EFFECT. | 3 |

## 5.2 ELECTRICAL FMEA

The electrical components of the critical functions assessed in section 4.0 for this system were identified from the documents and diagrams referenced in the Documentation List and are depicted in the following figure(s) and analyzed in the associated Electrical FMEA (Worksheet 5122-016).

Part numbers for the components of the two cranes are listed as crane 1/crane 2. If a single part number is listed, the part is common to both cranes

Part locations in reference to Ederer Inc. drawing EB-2286 are listed under part names. The alpha-numeric designation represents the page number and alpha-numeric coordinate on that page.

# ELECTRICAL FAILURE MODES AND EFFECTS ANALYSIS

## FOR THE

30-TON BRIDGE CRANE

Crane Control Subsystem

PMN H70-1379-01

Wire harnesses, cables, or connectors were not analyzed in the Electrical FMEA for this system since a single failure (open or short) could not result in loss of life or vehicle. (Ref. NSTS 22206 section 4.0, paragraph 4.4.1, subparagraph b[2])

Table 12 (Page 1 of 16). **ELECTRICAL FMEA - MAIN POWER**

**System** 30-TON BRIDGE CRANE, OPF-3
**Subsystem** MAIN POWER
**Drawing No.** EDERER EB-2286 **Sheet No.**
**PMN** H70-1379-01

**Program** SPACE SHUTTLE

**Station Set/Facility Code** GD
**Date** MARCH 1991
**Reference Figure Used** NA
**Prepared By** P. CLUKEY, LSOC 51-22

| FIND NO. PART NO. | PART NAME | PART FUNCTION | a. FAILURE MODE<br>b. CAUSE<br>c. FMN<br>d. DETECTION METHOD<br>e. CORRECTING ACTION<br>f. TIME TO EFFECT<br>g. TIMEFRAME | FAILURE EFFECT ON SYSTEM PERFORMANCE | FAILURE EFFECT ON VEHICLE SYSTEMS AND/OR PERSONNEL SAFETY | CRIT CAT |
|---|---|---|---|---|---|---|
| MCB TED1340-80WL | 80 AMP/3 PHASE MAIN CIRCUIT BREAKER WITH 120V. SHUNT TRIP (3E3) | PROTECTS MAIN POWER LINE FROM OVERLOAD IN MAIN CRANE SYSTEM. | a. PREMATURE OPERATION | LOSS OF POWER TO ALL CRANE SYSTEMS. ALL BRAKES WILL SET. | NO EFFECT. | 3 |
| | | | a. FAILS TO OPERATE | DOWNSTREAM CIRCUIT BREAKERS WILL PROTECT SECONDARY CIRCUIT. REQUIRES DOUBLE FAILURE. | NO EFFECT. | 3 |
| FU1<br>FU2<br>FU3 | FUSE (3) (3G6, 7, 8) | PROTECTS UNDERVOLTAGE, PHASE LOSS, PHASE REVERSAL RELAY FROM SHORT/OVERLOAD. | a. PREMATURE OPERATION | LOSS OF POWER TO ALL CRANE SYSTEMS. ALL BRAKES WILL SET. | NO EFFECT. | 3 |
| | | | a. FAILS TO OPERATE | ASSOCIATED FUSE OR MAIN CIRCUIT BREAKER WILL PROVIDE PROTECTION AGAINST SHORT/OVERLOAD. REQUIRES PREVIOUS FAILURE. | NO EFFECT. | 3 |
| UV SLA-440-ALE | UNDER-VOLTAGE (ADJUST-ABLE), PHASE LOSS, PHASE REVERSAL, RELAY (3K7, 3018) | PROTECTS CRANE SYSTEMS FROM UNDERVOLTAGE, PHASE LOSS, AND PHASE REVERSAL. | a. FAILS DEACTIVATED (DE-ENGERGIZED POSI-TION) | CRANE WILL NOT POWER UP OR HOIST, TROLLEY AND BRIDGE OPERA-TION STOP AND ALL BRAKES SET. DE-ENERGIZES RELAY M1 WHICH DE-ENERGIZES RELAY M WHICH SHUTS OFF POWER TO MOTOR AND BRAKES. | NO EFFECT. | 3 |
| | | | a. FAILS ACTIVATED (ENER-GIZED POSITION) | LOSS OF UNDERVOLTAGE, PHASE LOSS, AND PHASE REVERSAL PRO-TECTION FOR CONTROL CIRCUITS. BRIDGE, TROLLEY, AND HOIST MOTOR CONTROL MODULES WILL DETECT ANY UNDERVOLTAGE, PHASE REVERSAL, OR PHASE LOSS. | NO EFFECT. | 3 |

Table 12 (Page 2 of 16). **ELECTRICAL FMEA - MAIN POWER**

**System** 30-TON BRIDGE CRANE, OPF-3
**Subsystem** MAIN POWER
**Drawing No.** EDERER EB-2286 **Sheet No.**
**PMN** H70-1379-01

**Program** SPACE SHUTTLE

**Station Set/Facility Code** GD
**Date** MARCH 1991
**Reference Figure Used** NA
**Prepared By** P. CLUKEY, LSOC 51-22

| FIND NO. PART NO. | PART NAME | PART FUNCTION | a. FAILURE MODE b. CAUSE c. FMN d. DETECTION METHOD e. CORRECTING ACTION f. TIME TO EFFECT g. TIMEFRAME | FAILURE EFFECT ON SYSTEM PERFORMANCE | FAILURE EFFECT ON VEHICLE SYSTEMS AND/OR PERSONNEL SAFETY | CRIT CAT |
|---|---|---|---|---|---|---|
| | | | a. CONTACT FAILS OPEN | HOIST, TROLLEY AND BRIDGE OPERATION STOP AND ALL BRAKES SET. DE-ENERGIZES RELAY M1 WHICH DE-ENERGIZES RELAY M WHICH SHUTS OFF POWER TO MOTOR AND BRAKES. | NO EFFECT. | 3 |
| | | | a. CONTACT FAILS CLOSED | LOSS OF UNDERVOLTAGE, PHASE LOSS, AND PHASE REVERSAL PROTECTION FOR CONTROL CIRCUITS. BRIDGE, TROLLEY, AND HOIST MOTOR CONTROL MODULES WILL DETECT ANY UNDERVOLTAGE, PHASE REVERSAL, OR PHASE LOSS. | NO EFFECT. | 3 |
| AC8 | ACCESSORIES CIRCUIT BREAKER 20A (3G10) | PROTECTS MAIN LINE FROM OVERLOAD IN ACCESSORIES CIRCUIT. | a. PREMATURE OPERATION | LOSS OF POWER TO SELSYNS, RADIOS, AND OTHER ACCESSORIES. LOSS OF POSITION FEEDBACK WILL BE VISIBLE TO OPERATOR. | NO EFFECT. | 3 |
| | | | a. FAILS TO OPERATE | UPSTREAM CIRCUIT BREAKER (MCB) WILL PROTECT MAINLINE FROM OVERLOAD. PREVIOUS FAILURE OF AN ACCESSORIES COMPONENT REQUIRED. | NO EFFECT. | 3 |
| AT TA-53515-3 | ACCESSORIES TRANSFORMER 7.5 KVA, 480-240/120V. (3L10) | SUPPLIES POWER TO WALKWAY OUTLETS, CAB OUTLETS, CAB LIGHT, FUTURE RADIO SYSTEM, AND SELSYNS. | a. FAILS OPEN | LOSS OF POWER TO SELSYNS, RADIOS, AND OTHER ACCESSORIES. LOSS OF POSITION FEEDBACK WILL BE APPARENT TO OPERATOR. | NO EFFECT. | 3 |

Table 12 (Page 3 of 16). **ELECTRICAL FMEA - MAIN POWER**

**System** 30-TON BRIDGE CRANE, OPF-3
**Subsystem** MAIN POWER
**Drawing No.** EDERER EB-2286 **Sheet No.**
**PMN** H70-1379-01

**Program** SPACE SHUTTLE

**Station Set/Facility Code** GD
**Date** MARCH 1991
**Reference Figure Used** NA
**Prepared By** P. CLUKEY, LSOC 51-22

| FIND NO. PART NO. | PART NAME | PART FUNCTION | a. FAILURE MODE<br>b. CAUSE<br>c. FMN<br>d. DETECTION METHOD<br>e. CORRECTING ACTION<br>f. TIME TO EFFECT<br>g. TIMEFRAME | FAILURE EFFECT ON SYSTEM PERFORMANCE | FAILURE EFFECT ON VEHICLE SYSTEMS AND/OR PERSONNEL SAFETY | CRIT CAT |
|---|---|---|---|---|---|---|
| | | | a. FAILS SHORT | LOSS OF POWER TO SELSYNS, RADIOS, AND OTHER ACCESSORIES. LOSS OF POSITION FEEDBACK WILL BE APPARENT TO OPERATOR. CIRCUIT BREAKER ACB WILL TRIP. | NO EFFECT. | 3 |
| NONE | MAIN ACCESSO-RIES CIRCUIT BREAKER 40A (3P10, 11) | PROTECTS ACCESSORIES TRANSFORMER FROM SHORT/ OVERLOAD IN ACCESSORIES CIRCUIT. | a. PREMATURE OPERATION | LOSS OF POWER TO SELSYNS, RADIOS, AND OTHER ACCESSORIES. LOSS OF POSITION FEEDBACK WILL BE APPARENT TO OPERATOR. | NO EFFECT. | 3 |
| | | | a. FAILS TO OPERATE | SERIES ACCESSORIES CIRCUIT BREAKERS WILL PROTECT ACCESSO-RIES TRANSFORMER. REQUIRES PRE-VIOUS FAILURE IN SELSYN, RADIO, OR ACCESSORIES CIRCUITS. | NO EFFECT. | 3 |
| NONE | SELSYN CIRCUIT BREAKER 15A (3P8) | PROTECTS ACCESSORIES TRANSFORMER FROM SHORT/ OVERLOAD IN SELSYN CIRCUIT. | a. PREMATURE OPERATION | LOSS OF SELSYN POSITION INFORMA-TION. CAB AMMETERS WILL INDICATE ANY CRANE MOTION. | NO EFFECT. | 3 |
| | | | a. FAILS TO OPERATE | MAIN ACCESSORIES CIRCUIT BREAKER WILL PROTECT ACCESSO-RIES TRANSFORMER. REQUIRES PRE-VIOUS FAILURE IN SELSYN CIRCUIT. | NO EFFECT. | 3 |
| NONE | RADIO SYSTEM CIRCUIT BREAKER 20A (3R7) | PROTECTS ACCESSORIES TRANSFORMER FROM SHORT/ OVERLOAD IN RADIO SYSTEM CIRCUIT. | a. PREMATURE OPERATION | LOSS OF POWER TO ONE RADIO SYSTEM. SECOND RADIO SYSTEM WILL BE POWERED FROM SEPERATE CIRCUIT BREAKER. OBSERVER ON NETWORK CAN ENGAGE REMOTE E-STOP TO DE-ENERGIZE CRANE. | NO EFFECT. | 3 |

Table 12 (Page 4 of 16). **ELECTRICAL FMEA - MAIN POWER**

**System** 30-TON BRIDGE CRANE, OPF-3
**Subsystem** MAIN POWER
**Drawing No.** EDERER EB-2286 **Sheet No.**
**PMN** H70-1379-01

**Program** SPACE SHUTTLE

**Station Set/Facility Code** GD
**Date** MARCH 1991
**Reference Figure Used** NA
**Prepared By** P. CLUKEY, LSOC 51-22

| FIND NO. PART NO. | PART NAME | PART FUNCTION | a. FAILURE MODE<br>b. CAUSE<br>c. FMN<br>d. DETECTION METHOD<br>e. CORRECTING ACTION<br>f. TIME TO EFFECT<br>g. TIMEFRAME | FAILURE EFFECT ON SYSTEM PERFORMANCE | FAILURE EFFECT ON VEHICLE SYSTEMS AND/OR PERSONNEL SAFETY | CRIT CAT |
|---|---|---|---|---|---|---|
| | | | a. FAILS TO OPERATE | MAIN ACCESSORIES CIRCUIT BREAKER WILL PROTECT ACCESSORIES TRANSFORMER. REQUIRES PREVIOUS FAILURE IN RADIO CIRCUIT. | NO EFFECT. | 3 |
| NONE | WALKWAY OUTLET CIRCUIT BREAKER 20A (3R8) | PROTECTS ACCESSORIES TRANSFORMER FROM SHORT/ OVERLOAD IN WALKWAY OUTLETS. OR SECOND RADIO SYSTEM. | a. PREMATURE OPERATION | LOSS OF POWER TO WALKWAY OUTLETS. AND SECOND RADIO SYSTEM. FIRST RADIO SYTEM IS POWERED FROM SEPERATE CIRCUIT BREAKER. OBSERVER ON NETWORK CAN ENGAGE REMOTE E-STOP TO DE-ENERGIZE CRANE. | NO EFFECT. | 3 |
| | | | a. FAILS TO OPERATE | MAIN ACCESSORIES CIRCUIT BREAKER WILL PROTECT ACCESSORIES TRANSFORMER. REQUIRES PREVIOUS FAILURE IN WALKWAY OUTLET CIRCUIT. OR SECOND RADIO CIRCUIT. | NO EFFECT. | 3 |
| NONE | CAB OUTLET CIRCUIT BREAKER 20A (3R10) | PROTECTS ACCESSORIES TRANSFORMER FROM SHORT/ OVERLOAD IN CAB OUTLET OR SECOND RADIO SYSTEM. | a. PREMATURE OPERATION | LOSS OF POWER TO CAB OUTLET AND SECOND RADIO SYSTEM. FIRST RADIO SYTEM IS POWERED FROM SEPERATE CIRCUIT BREAKER. OBSERVER ON NETWORK CAN ENGAGE REMOTE E-STOP TO DE-ENERGIZE CRANE. | NO EFFECT. | 3 |
| | | | a. FAILS TO OPERATE | MAIN ACCESSORIES CIRCUIT BREAKER WILL PROTECT ACCESSORIES TRANSFORMER. REQUIRES PREVIOUS FAILURE IN CAB OUTLET OR SECOND RADIO CIRCUIT. | NO EFFECT. | 3 |
| NONE | CAB LIGHT CIRCUIT BREAKER 15A (3R11) | PROTECTS ACCESSORIES TRANSFORMER FROM SHORT/ OVERLOAD IN CAB LIGHT CIRCUIT. | a. PREMATURE OPERATION | LOSS OF POWER TO CAB LIGHT | NO EFFECT. | 3 |

Table 12 (Page 5 of 16). **ELECTRICAL FMEA - MAIN POWER**

**System** 30-TON BRIDGE CRANE, OPF-3
**Subsystem** MAIN POWER
**Drawing No.** EDERER EB-2286 **Sheet No.**
**PMN** H70-1379-01

**Program** SPACE SHUTTLE

**Station Set/Facility Code** GD
**Date** MARCH 1991
**Reference Figure Used** NA
**Prepared By** P. CLUKEY, LSOC 51-22

| FIND NO. PART NO. | PART NAME | PART FUNCTION | a. FAILURE MODE b. CAUSE c. FMN d. DETECTION METHOD e. CORRECTING ACTION f. TIME TO EFFECT g. TIMEFRAME | FAILURE EFFECT ON SYSTEM PERFORMANCE | FAILURE EFFECT ON VEHICLE SYSTEMS AND/OR PERSONNEL SAFETY | CRIT CAT |
|---|---|---|---|---|---|---|
| | | | a. FAILS TO OPERATE | MAIN ACCESSORIES CIRCUIT BREAKER WILL PROTECT ACCESSORIES TRANSFORMER. REQUIRES PREVIOUS FAILURE IN CAB LIGHT CIRCUIT. | NO EFFECT. | 3 |
| NONE | CAB LIGHT SWITCH (3T11) | CONTROLS POWER TO CAB LIGHT. | a. FAILS OPEN | CAB LIGHT WILL NOT ILLUMINATE. | NO EFFECT. | 3 |
| | | | a. FAILS CLOSED | CAB LIGHT WILL REMAIN ON WITH CRANE POWER. | NO EFFECT. | 3 |
| NONE 2V808 | CAB LIGHT (3T11) | PROVIDES ILLUMINATION OF CONTROL CAB | a. FAILS OPEN | CAB LIGHT WILL NOT ILLUMINATE. | NO EFFECT. | 3 |
| | | | a. FAILS SHORT | CAB LIGHT CIRCUIT BREAKER WILL PROTECT ACCESSORIES TRANSFORMER | NO EFFECT. | 3 |
| NONE | CAB OUTLET (3U10) | PROVIDES POWER FOR EXTERNAL DEVICES AND SECOND RADIO | a. FAILS OPEN | LOSS OF POWER FOR EXTERNAL DEVICES AND SECOND RADIO SYSTEM. FIRST RADIO SYTEM IS POWERED FROM SEPERATE CIRCUIT BREAKER. OBSERVER ON NETWORK CAN ENGAGE REMOTE E-STOP TO DE-ENERGIZE CRANE. | NO EFFECT. | 3 |
| | | | a. FAILS SHORT | CAB OUTLET CIRCUIT BREAKER WILL PROTECT ACCESSORIES TRANSFORMER. LOSS OF POWER FOR EXTERNAL DEVICES AND SECOND RADIO SYSTEM. FIRST RADIO SYTEM IS POWERED FROM SEPERATE CIRCUIT BREAKER. OBSERVER ON NETWORK CAN ENGAGE REMOTE E-STOP TO DE-ENERGIZE CRANE. | NO EFFECT. | 3 |

Table 12 (Page 6 of 16). **ELECTRICAL FMEA - MAIN POWER**

**System** 30-TON BRIDGE CRANE, OPF-3
**Subsystem** MAIN POWER
**Drawing No.** EDERER EB-2286 **Sheet No.**
**PMN** H70-1379-01

**Program** SPACE SHUTTLE

**Station Set/Facility Code** GD
**Date** MARCH 1991
**Reference Figure Used** NA
**Prepared By** P. CLUKEY, LSOC 51-22

| FIND NO. PART NO. | PART NAME | PART FUNCTION | a. FAILURE MODE b. CAUSE c. FMN d. DETECTION METHOD e. CORRECTING ACTION f. TIME TO EFFECT g. TIMEFRAME | FAILURE EFFECT ON SYSTEM PERFORMANCE | FAILURE EFFECT ON VEHICLE SYSTEMS AND/OR PERSONNEL SAFETY | CRIT CAT |
|---|---|---|---|---|---|---|
| NONE | WALKWAY OUTLETS (3U9) | PROVIDES POWER FOR EXTERNAL DEVICES. | a. FAILS OPEN | LOSS OF POWER FOR EXTERNAL DEVICE | NO EFFECT. | 3 |
| | | | a. FAILS SHORT | WALKWAY OUTLET CIRCUIT BREAKER WILL PROTECT ACCESSORIES TRANS-FORMER. LOSS OF POWER TO WALKWAY OUTLETS AND SECOND RADIO SYSTEM. FIRST RADIO SYTEM IS POWERED FROM SEPERATE CIRCUIT BREAKER. OBSERVER ON NETWORK CAN ENGAGE REMOTE E-STOP TO DE-ENERGIZE CRANE. | NO EFFECT. | 3 |
| FU4 FU5 | (2) FUSE (3G14, 16) | PROTECTS MAIN LINE FROM SHORT/OVERLOAD IN CRANE CONTROLS. | a. PREMATURE OPERATION | RELAYS M1 AND M DROP OUT. LOSS OF POWER TO HOIST, TROLLEY, AND BRIDGE CONTROLS. ALL BRAKES WILL SET. | NO EFFECT. | 3 |
| | | | a. FAILS TO OPERATE | OPPOSING FUSE WILL PROTECT MAIN POWER LINE FROM OVERLOAD. RELAYS M1 AND M DROP OUT. LOSS OF POWER TO HOIST, TROLLEY, AND BRIDGE CONTROLS. ALL BRAKES WILL SET. | NO EFFECT. | 3 |
| CT TA-1-81218 | CONTROL TRANS-FORMER 1.5 KVA, 480-120V. (3K15) | SUPPLIES 120 VAC POWER TO CONTROLS. | a. FAILS OPEN | RELAYS M1 AND M DROP OUT. LOSS OF POWER TO HOIST, TROLLEY, AND BRIDGE CONTROLS. ALL BRAKES WILL SET. | NO EFFECT. | 3 |
| | | | a. FAILS SHORT | FUSE PROTECTING MAIN POWER LINE WILL BLOW. RELAYS M1 AND M DROP OUT. LOSS OF POWER TO HOIST, TROLLEY, AND BRIDGE CONTROLS. ALL BRAKES WILL SET. | NO EFFECT. | 3 |

Table 12 (Page 7 of 16). **ELECTRICAL FMEA - MAIN POWER**

**System** 30-TON BRIDGE CRANE, OPF-3
**Subsystem** MAIN POWER
**Drawing No.** EDERER EB-2286 **Sheet No.**
**PMN** H70-1379-01

**Program** SPACE SHUTTLE

**Station Set/Facility Code** GD
**Date** MARCH 1991
**Reference Figure Used** NA
**Prepared By** P. CLUKEY, LSOC 51-22

| FIND NO. PART NO. | PART NAME | PART FUNCTION | a. FAILURE MODE b. CAUSE c. FMN d. DETECTION METHOD e. CORRECTING ACTION f. TIME TO EFFECT g. TIMEFRAME | FAILURE EFFECT ON SYSTEM PERFORMANCE | FAILURE EFFECT ON VEHICLE SYSTEMS AND/OR PERSONNEL SAFETY | CRIT CAT |
|---|---|---|---|---|---|---|
| FU6 | FUSE (3A016) | PROTECTS CT SECONDARY LINE FROM SHORT/OVERLOAD IN CRANE CONTROLS. | a. PREMATURE OPERATION | RELAYS M1 AND M DROP OUT. LOSS OF POWER TO HOIST, TROLLEY, AND BRIDGE CONTROLS. ALL BRAKES WILL SET. | NO EFFECT. | 3 |
| | | | a. FAILS TO OPERATE | LOSS OF CURRENT OVERLOAD PROTECTION. WOULD REQUIRE A PREVIOUS FAILURE OF A CONTROL CIRCUIT COMPONENT. POSSIBLE DAMAGE TO UPSTREAM WIRING. | NO EFFECT. | 3 |
| NONE 9001-KR-IU | INDICATOR LIGHT TEST SWITCH (3Q16) | ENERGIZES CIRCUIT TO TEST THE CAB INDICATOR LIGHTS. | a. FAILS OPEN | TEST OF INDICATOR LIGHTS FAILS. | NO EFFECT. | 3 |
| | | | a. FAILS CLOSED | INDICATOR LIGHTS WILL REMAIN ILLUMINATED WHEN TEST BUTTON RELEASED. | NO EFFECT. | 3 |
| 1LT1 700-P600A1 | INDICATOR LIGHT TEST RELAY (3T16, 3027, 3029, 9H29, 9M23) | WHEN ENERGIZED, CLOSES CONTACTS TO TEST THE "POWER ON," "COMPUTER FAULT," "DRIVE LOAD IMBALANCE," "NORTH HOIST MOTOR OVERTEMP WARNING," "NORTH HOIST MOTOR OVERTEMP SHUTDOWN," "SOUTH HOIST MOTOR OVERTEMP WARNING," AND "SOUTH HOIST MOTOR OVERTEMP SHUTDOWN" INDICATOR LIGHTS. | a. FAILS DEACTIVATED (DE-ENERGIZED POSITION) | TEST OF ALL SEVEN INDICATOR LIGHTS FAILS. | NO EFFECT. | 3 |
| | | | a. FAILS OPEN (ANY ONE OF SEVEN CONTACTS) | TEST OF ASSOCIATED INDICATOR LIGHT FAILS. | NO EFFECT. | 3 |

Table 12 (Page 8 of 16). **ELECTRICAL FMEA - MAIN POWER**

**System** 30-TON BRIDGE CRANE, OPF-3
**Subsystem** MAIN POWER
**Drawing No.** EDERER EB-2286 **Sheet No.**
**PMN** H70-1379-01

**Program** SPACE SHUTTLE

**Station Set/Facility Code** GD
**Date** MARCH 1991
**Reference Figure Used** NA
**Prepared By** P. CLUKEY, LSOC 51-22

| FIND NO. PART NO. | PART NAME | PART FUNCTION | a. FAILURE MODE<br>b. CAUSE<br>c. FMN<br>d. DETECTION METHOD<br>e. CORRECTING ACTION<br>f. TIME TO EFFECT<br>g. TIMEFRAME | FAILURE EFFECT ON SYSTEM PERFORMANCE | FAILURE EFFECT ON VEHICLE SYSTEMS AND/OR PERSONNEL SAFETY | CRIT CAT |
|---|---|---|---|---|---|---|
| | | | a. FAILS CLOSED (ANY ONE OF SEVEN CONTACTS) | ASSOCIATED INDICATOR LIGHT WILL BE LIT WHEN CONDITION INDICATED MAY NOT EXIST. | NO EFFECT. | 3 |
| 1LT2<br>700-P600A1 | INDICATOR LIGHT TEST RELAY (3T17, 14N14, 17N17) | WHEN ENERGIZED, CLOSES CONTACTS TO TEST THE "TROLLEY OVERTEMP WARNING," "TROLLEY SHUTDOWN," "BRIDGE EAST MOTOR OVERTEMP WARNING," "BRIDGE EAST MOTOR OVERTEMP SHUTDOWN," "BRIDGE WEST MOTOR OVERTEMP WARNING," AND "BRIDGE WEST MOTOR OVERTEMP SHUTDOWN" INDICATOR LIGHTS. | a. FAILS DEACTIVATED (DE-ENERGIZED POSITION) | TEST OF ALL SIX INDICATOR LIGHTS FAILS. | NO EFFECT. | 3 |
| | | | a. FAILS OPEN (ANY ONE OF SIX CONTACTS) | TEST OF ASSOCIATED INDICATOR LIGHT FAILS. | NO EFFECT. | 3 |
| | | | a. FAILS CLOSED (ANY ONE OF SIX CONTACTS) | ASSOCIATED INDICATOR LIGHT WILL BE LIT WHEN CONDITION INDICATED MAY NOT EXIST. | NO EFFECT. | 3 |
| NONE<br>9001-KR-1U | STOP SWITCH, PUSH-BUTTON, CIRCUIT OPENING (3H18) | CUTS POWER TO THE CONTROL CIRCUITS RESULTING IN STOPPING HOIST, BRIDGE, TROLLEY, AND SETTING ALL BRAKES. | a. FAILS OPEN | HOIST, TROLLEY AND BRIDGE OPERATION STOP AND ALL BRAKES SET. | NO EFFECT. | 3 |

Table 12 (Page 9 of 16). **ELECTRICAL FMEA - MAIN POWER**

**System** 30-TON BRIDGE CRANE, OPF-3
**Subsystem** MAIN POWER
**Drawing No.** EDERER EB-2286 **Sheet No.**
**PMN** H70-1379-01

**Program** SPACE SHUTTLE

**Station Set/Facility Code** GD
**Date** MARCH 1991
**Reference Figure Used** NA
**Prepared By** P. CLUKEY, LSOC 51-22

| FIND NO. PART NO. | PART NAME | PART FUNCTION | a. FAILURE MODE b. CAUSE c. FMN d. DETECTION METHOD e. CORRECTING ACTION f. TIME TO EFFECT g. TIMEFRAME | FAILURE EFFECT ON SYSTEM PERFORMANCE | FAILURE EFFECT ON VEHICLE SYSTEMS AND/OR PERSONNEL SAFETY | CRIT CAT |
|---|---|---|---|---|---|---|
| | | | a. FAILS CLOSED | LOSS OF MAIN STOPPING FUNCTION. WOULD REQUIRE A PREVIOUS FAILURE OF A CONTROL CIRCUIT COMPONENT. POSSIBLE DAMAGE TO A VEHICLE SYSTEM IF POWER CANNOT BE REMOVED FROM CONTROL CIRCUIT. EMERGENCY STOP WILL DE-ENERGIZE CRANE AND SET ALL BRAKES. | NO EFFECT. | 3 |
| NONE 9001-KR-1U | START SWITCH, PUSH-BUTTON, CIRCUIT (3K18) | ENERGIZES CONTROL CIRCUIT TO ALLOW OPERATION OF HOIST, BRIDGE, AND TROLLEY. | a. FAILS OPEN | HOIST, TROLLEY AND BRIDGE WILL NOT OPERATE. | NO EFFECT. | 3 |
| | | | a. FAILS CLOSED | WHEN STOP BUTTON IS DEPRESSED AND HELD FOR 1/2 SECOND, SYSTEM WILL POWER DOWN. WHEN THE STOP BUTTON IS RELEASED, SYSTEM WILL POWER UP. EMERGENCY STOP WILL DE-ENERGIZE CRANE AND SET ALL BRAKES. | NO EFFECT. | 3 |
| M1 700-PT400A1 | START RELAY (3T18, 3L18, 3021, 8C17, 8C19, 14D6, 17D8) | WHEN ENERGIZED, CLOSES 1) TIME DELAY OPENING CONTACT THAT ENERGIZES THE MAIN CONTACTOR (M) RELAY, 2) CONTACT PARALLELING START SWITCH ON START LINE, 3) CONTACTS (2) FOR CONTROL OF HOIST 120V. CONTROL POWER, 4) CONTACT FOR CONTROL OF TROLLEY TRAVEL, AND 5) CONTACT FOR CONTROL OF BRIDGE TRAVEL. | a. FAILS DEACTIVATED (DE-ENERGIZED POSITION) | START CIRCUIT WILL NOT OPERATE, PREVENTING HOIST, BRIDGE AND TROLLEY FROM OPERATING. ALL BRAKES WILL REMAIN SET. | NO EFFECT. | 3 |

Table 12 (Page 10 of 16). **ELECTRICAL FMEA - MAIN POWER**

**System** 30-TON BRIDGE CRANE, OPF-3
**Subsystem** MAIN POWER
**Drawing No.** EDERER EB-2286 **Sheet No.**
**PMN** H70-1379-01

**Program** SPACE SHUTTLE

**Station Set/Facility Code** GD
**Date** MARCH 1991
**Reference Figure Used** NA
**Prepared By** P. CLUKEY, LSOC 51-22

| FIND NO. PART NO. | PART NAME | PART FUNCTION | a. FAILURE MODE b. CAUSE c. FMN d. DETECTION METHOD e. CORRECTING ACTION f. TIME TO EFFECT g. TIMEFRAME | FAILURE EFFECT ON SYSTEM PERFORMANCE | FAILURE EFFECT ON VEHICLE SYSTEMS AND/OR PERSONNEL SAFETY | CRIT CAT |
|---|---|---|---|---|---|---|
| | | | a. FAILS OPEN (ANY OF FIVE CONTACTS LISTED UNDER PART FUNCTION) | ASSOCIATED CIRCUIT IN WHICH CONTACT IS TO BE FOUND WILL NOT BE CLOSED, PREVENTING OPERATION OF THAT FUNCTION. | NO EFFECT. | 3 |
| | START CONTACTS (3021) | TIME DELAY OPENING CONTACT THAT ENERGIZES THE MAIN CONTACT RELAY | a. FAILS CLOSED | WHEN STOP BUTTON IS PRESSED, POWER TO HOIST, TROLLEY AND BRIDGE MOTOR CONTROL MODULES REMAINS ENERGIZED, CONTROL CIRCUITS WILL BE DE-ENERGIZED, AND BRAKES WILL BE SET. | NO EFFECT. | 3 |
| | START CONTACT (3L18) | HOLDS M1 RELAY ENERGIZED WHEN START BUTTON IS RELEASED. | a. FAILS CLOSED | WHEN STOP BUTTON IS DEPRESSED, THE SYSTEM WILL POWER DOWN. WHEN STOP SWITCH IS RELEASED, SYSTEM WILL POWER UP. EMERGENCY STOP WILL DE-ENERGIZE CRANE AND SET ALL BRAKES. | NO EFFECT. | 3 |
| | START CONTACTS (8C17, 8C19) | SERIES CONTACTS FOR HOIST CONTROL POWER. | a. ONE CONTACT FAILS CLOSED | SYSTEM WILL FUNCTION NORMALLY. | NO EFFECT. | 3 |
| | START CONTACT (14D6) | CONTACT FOR TROLLEY CONTROL POWER. | a. FAILS CLOSED | HOIST CONTROL POWER WILL DE-ENERGIZE AFTER A 0.5 SECOND DELAY. | NO EFFECT. | 3 |
| | START CONTACT (17D8) | CONTACT FOR BRIDGE CONTROL POWER. | a. FAILS CLOSED | BRIDGE CONTROL POWER WILL DE-ENERGIZE AFTER A 0.5 SECOND DELAY. | NO EFFECT. | 3 |
| M 500-D0D930 | MAIN CONTACTOR RELAY (3T21) | WHEN ENERGIZED, CLOSES 1) POWER ON INDICATOR LAMP CONTACT, 2) OPENS NORMALLY CLOSED CONTACT FOR MOTOR SPACE HEATERS, AND 3) MAIN POWER LINE CONTACTS (3). | a. FAILS DEACTIVATED (DE-ENERGIZED POSITION) | CRANE WILL NOT POWER UP. ALL BRAKES WILL REMAIN SET. | NO EFFECT. | 3 |

Table 12 (Page 11 of 16). **ELECTRICAL FMEA - MAIN POWER**

**System** 30-TON BRIDGE CRANE, OPF-3
**Subsystem** MAIN POWER
**Drawing No.** EDERER EB-2286 **Sheet No.**
**PMN** H70-1379-01

**Program** SPACE SHUTTLE

**Station Set/Facility Code** GD
**Date** MARCH 1991
**Reference Figure Used** NA
**Prepared By** P. CLUKEY, LSOC 51-22

| FIND NO. PART NO. | PART NAME | PART FUNCTION | a. FAILURE MODE b. CAUSE c. FMN d. DETECTION METHOD e. CORRECTING ACTION f. TIME TO EFFECT g. TIMEFRAME | FAILURE EFFECT ON SYSTEM PERFORMANCE | FAILURE EFFECT ON VEHICLE SYSTEMS AND/OR PERSONNEL SAFETY | CRIT CAT |
|---|---|---|---|---|---|---|
| | CONTACT (3H28) | ENERGIZES POWER ON INDICATOR. | a. FAILS OPEN | POWER ON INDICATOR LAMP WILL NOT ILLUMINATE DURING NORMAL SYSTEM OPERATION. | NO EFFECT. | 3 |
| | | | a. FAILS CLOSED | POWER ON INDICATOR LAMP WILL BE ILLUMINATED PRIOR TO THE START SWITCH CLOSING. | NO EFFECT. | 3 |
| | CONTACT (3AJ5) | REMOVES POWER FROM MOTOR SPACE HEATERS WHEN CONTROLS ARE ENERGIZED. | a. FAILS OPEN | MOTOR SPACE HEATERS WILL NOT TURN ON AFTER CRANE CONTROL SHUT DOWN RESULTING IN THE POSSIBILITY OF MOISTURE BUILD-UP IN THE HOIST, TROLLEY AND BRIDGE MOTORS WHICH MAY CAUSE MOTOR DAMAGE. | NO EFFECT. | 3 |
| | | | a. FAILS CLOSED | MOTOR SPACE HEATERS WILL REMAIN ON CONTINUOUSLY WITH THE POSSIBILITY OF THE MOTORS OVERHEATING DURING OPERATIONS. MOTOR OVERTEMP WARNING WOULD BE ACTIVATED AND IF TEMPERATURE HIGH ENOUGH, MOTOR OVERTEMP SHUTDOWN WOULD BE ACTIVATED. | NO EFFECT. | 3 |
| | CONTACTS (3AE14) | | a. FAILS OPEN | HOIST, BRIDGE AND TROLLEY WILL NOT BE ENERGIZED. ALL BRAKES WILL REMAIN ON OR BE SET. | NO EFFECT. | 3 |
| | | | a. FAILS CLOSED | WHEN STOP BUTTON IS PRESSED, POWER TO BRIDGE, TROLLEY, AND HOIST MOTOR CONTROL MODULES WILL REMAIN ENERGIZED. CONTROL CIRCUITS WILL BE DE-ENERGIZED, AND BRAKES WILL BE SET. | NO EFFECT. | 3 |

Table 12 (Page 12 of 16). **ELECTRICAL FMEA - MAIN POWER**

**System** 30-TON BRIDGE CRANE, OPF-3
**Subsystem** MAIN POWER
**Drawing No.** EDERER EB-2286 **Sheet No.**
**PMN** H70-1379-01

**Program** SPACE SHUTTLE

**Station Set/Facility Code** GD
**Date** MARCH 1991
**Reference Figure Used** NA
**Prepared By** P. CLUKEY, LSOC 51-22

| FIND NO. PART NO. | PART NAME | PART FUNCTION | a. FAILURE MODE<br>b. CAUSE<br>c. FMN<br>d. DETECTION METHOD<br>e. CORRECTING ACTION<br>f. TIME TO EFFECT<br>g. TIMEFRAME | FAILURE EFFECT ON SYSTEM PERFORMANCE | FAILURE EFFECT ON VEHICLE SYSTEMS AND/OR PERSONNEL SAFETY | CRIT CAT |
|---|---|---|---|---|---|---|
| NONE<br>9001-KR-5R05 | EMERGENCY STOP SWITCH (E-STOP) 3H21) | WHEN CLOSED, IT WILL ENERGIZE THE SHUNT TRIP RELAY COIL (ST) TO OPEN THE 80 AMP/3 PHASE MAIN CIRCUIT BREAKER (MCB), THEREBY DE-ENERGIZING ALL CRANE SYSTEMS AND SETTING ALL BRAKES. | a. FAILS OPEN | SHUNT TRIP FOR MCB WILL NOT BE ENERGIZED TO OPEN MCB. CRANE MAY BE DE-ENERGIZED AND ALL BRAKES APPLIED BY (1) MANUALLY DEPRESSING THE STOP SWITCH ON THE CAB CONTROL PANEL OR (2) USING ONE OF THE REMOTE EMERGENCY STOP STATIONS. THE HOIST, TROLLEY, AND BRIDGE MASTER SWITCHES WILL ALSO STOP THE FUNCTIONS THEY CONTROL. | NO EFFECT. | 3 |
| | | | a. FAILS CLOSED | SHUNT TRIP WILL OPEN MCB AND DE-ENERGIZE ALL CRANE SYSTEMS AND SET ALL BRAKES. MCB WILL STAY OPEN UNTIL E-STOP REPAIRED. | NO EFFECT. | 3 |
| NONE<br>IC9445-C200 | FINAL UPPER LIMIT SWITCH (HOIST UPPER WEIGHT LIMIT) (3K23) | REDUNDANT UPPER LIMIT SWITCH. WHEN CLOSED, IT WILL ENERGIZE THE SHUNT TRIP RELAY COIL TO OPEN THE 80 AMP/3 PHASE MAIN CIRCUIT BREAKER (MCB), THEREBY DE-ENERGIZING ALL CRANE SYSTEMS AND SETTING ALL BRAKES. | a. FAILS OPEN | SHUNT TRIP FOR MCB WILL NOT BE ENERGIZED, HOIST COULD BE TWO-BLOCKED. REQUIRES MULTIPLE FAILURES. (FIRST FAILURE WOULD BE OF HOIST UPPER ROTARY LIMIT SWITCH THEN SECOND FAILURE WOULD BE WEIGHT OPERATED LIMIT SWITCH. THEN THE STOP SWITCH WOULD HAVE TO FAIL AND THEN THE E-STOP SWITCH WOULD HAVE TO FAIL.) | NO EFFECT. | 3 |

Table 12 (Page 13 of 16). **ELECTRICAL FMEA - MAIN POWER**

**System** 30-TON BRIDGE CRANE, OPF-3
**Subsystem** MAIN POWER
**Drawing No.** EDERER EB-2286 **Sheet No.**
**PMN** H70-1379-01

**Program** SPACE SHUTTLE

**Station Set/Facility Code** GD
**Date** MARCH 1991
**Reference Figure Used** NA
**Prepared By** P. CLUKEY, LSOC 51-22

| FIND NO. PART NO. | PART NAME | PART FUNCTION | a. FAILURE MODE b. CAUSE c. FMN d. DETECTION METHOD e. CORRECTING ACTION f. TIME TO EFFECT g. TIMEFRAME | FAILURE EFFECT ON SYSTEM PERFORMANCE | FAILURE EFFECT ON VEHICLE SYSTEMS AND/OR PERSONNEL SAFETY | CRIT CAT |
|---|---|---|---|---|---|---|
| | NOTE: DOES NOT COMPLY WITH NSS/ G0-1740.9 REQUIRE-MENTS WITH REGARD TO NORMALLY CLOSED CONTACTS FOR FINAL UPPER LIMIT SWITCH. | | a. FAILS CLOSED | SHUNT TRIP WILL OPEN MCB AND DE-ENERGIZE ALL CRANE SYSTEMS AND SET ALL BRAKES. MCB WILL STAY OPEN UNTIL SWITCH REPAIRED. | NO EFFECT. | 3 |
| ST TED1340-80WL | SHUNT TRIP FOR MAIN CIRCUIT BREAKER (MCB) (3T22) | WHEN ACTIVATED, IT WILL OPEN THE 80 AMP/3 PHASE MAIN CIRCUIT BREAKER (MCB), THEREBY DE-ENERGIZING ALL CRANE SYSTEMS AND ALL BRAKES. | a. FAILS DEACTIVATED | MCB WILL NOT BE OPENED BY SHUNT TRIP. CRANE MAY BE DE-ENERGIZED AND ALL BRAKES APPLIED BY (1) MANUALLY DEPRESSING THE STOP SWITCH ON THE CAB CONTROL PANEL OR (2) USING ONE OF THE REMOTE EMERGENCY STOP STATIONS. THE HOIST, TROLLEY, AND BRIDGE MASTER SWITCHES WILL ALSO STOP THE FUNCTIONS THEY CONTROL. | NO EFFECT. | 3 |
| NONE | POWER ON INDICATOR LAMP (3T28) | INDICATES WHEN CONTROL CIRCUIT IS ENERGIZED. | a. FAILS OPEN | ENERGIZATION OF CIRCUIT WILL NOT BE INDICATED. | NO EFFECT. | 3 |
| | | | a. FAILS SHORT | FU6 WILL PROTECT CONTROL TRANS-FORMER FROM SHORT/OVERLOAD. | NO EFFECT. | 3 |
| NONE | COMPUTER FAULT INDI-CATOR LAMP | INDICATES WHEN A COM-PUTER FAULT EXISTS | a. FAILS OPEN | WILL NOT INDICATE WHEN A COM-PUTER FAULT EXISTS. REQUIRES DOUBLE FAILURE. | NO EFFECT. | 3 |

Table 12 (Page 14 of 16). **ELECTRICAL FMEA - MAIN POWER**

**System** 30-TON BRIDGE CRANE, OPF-3
**Subsystem** MAIN POWER
**Drawing No.** EDERER EB-2286 **Sheet No.**
**PMN** H70-1379-01

**Program** SPACE SHUTTLE

**Station Set/Facility Code** GD
**Date** MARCH 1991
**Reference Figure Used** NA
**Prepared By** P. CLUKEY, LSOC 51-22

| FIND NO. PART NO. | PART NAME | PART FUNCTION | a. FAILURE MODE b. CAUSE c. FMN d. DETECTION METHOD e. CORRECTING ACTION f. TIME TO EFFECT g. TIMEFRAME | FAILURE EFFECT ON SYSTEM PERFORMANCE | FAILURE EFFECT ON VEHICLE SYSTEMS AND/OR PERSONNEL SAFETY | CRIT CAT |
|---|---|---|---|---|---|---|
| | | | a. FAILS SHORT | FUSE WILL PROTECT HCT FROM OVER-LOAD. | NO EFFECT. | 3 |
| NONE | MOTOR SPACE HEATERS (3AM7) | PREVENTS MOISTURE ACCU-MULATION IN NORTH HOIST, SOUTH HOIST, TROLLEY, EAST BRIDGE, AND WEST BRIDGE MOTORS. | a. FAILS OPEN | HEATER WILL NOT OPERATE RESULTING IN POSSIBLE DAMAGE TO THE MOTORS DUE TO MOISTURE ACCUMULATION AND CORROSION. | NO EFFECT. | 3 |
| | | | a. FAILS SHORT | CONTROL CIRCUIT FUSE WILL OPEN AND STOP ALL MOTORS AND SET BRAKES. | NO EFFECT. | 3 |
| SW1/SW2 | HOIST CONTROL PANEL LIGHT SWITCH AND BRIDGE/ TROLLEY CONTROL PANEL LIGHT SWITCH (3AP9, 3AP10) | TURNS ON AND OFF THE HOIST CONTROL PANEL LIGHTS AND BRIDGE/ TROLLEY CONTROL PANEL LIGHTS. | a. FAILS OPEN | ASSOCIATED CONTROL PANEL LIGHTS WILL NOT OPERATE. | NO EFFECT. | 3 |
| | | | a. FAILS CLOSED | CONTROL PANEL LIGHTS WILL REMAIN ON WITH CRANE CONTROL POWER. | NO EFFECT. | 3 |
| NONE | HOIST AND BRIDGE/ TROLLEY CONTROL PANEL LIGHTS (3AR9, R10) | PROVIDE ILLUMINATION OF CONTROL PANEL CABINETS. | a. FAILS OPEN | LOSS OF LIGHTING TO ASSOCIATED CONTROL PANEL CABINET. | NO EFFECT. | 3 |

Table 12 (Page 15 of 16). **ELECTRICAL FMEA - MAIN POWER**

**System** 30-TON BRIDGE CRANE, OPF-3
**Subsystem** MAIN POWER
**Drawing No.** EDERER EB-2286 **Sheet No.**
**PMN** H70-1379-01

**Program** SPACE SHUTTLE

**Station Set/Facility Code** GD
**Date** MARCH 1991
**Reference Figure Used** NA
**Prepared By** P. CLUKEY, LSOC 51-22

| FIND NO. PART NO. | PART NAME | PART FUNCTION | a. FAILURE MODE<br>b. CAUSE<br>c. FMN<br>d. DETECTION METHOD<br>e. CORRECTING ACTION<br>f. TIME TO EFFECT<br>g. TIMEFRAME | FAILURE EFFECT ON SYSTEM PERFORMANCE | FAILURE EFFECT ON VEHICLE SYSTEMS AND/OR PERSONNEL SAFETY | CRIT CAT |
|---|---|---|---|---|---|---|
| | | | a. FAILS SHORT | CONTROL CIRCUIT FUSE WILL OPEN AND STOP ALL MOTORS AND SET BRAKES. | NO EFFECT. | 3 |
| HBT AC1500C-17V13A | HOIST BRAKE POWER TRANS-FORMER 1.5 KVA 480-240 V. (3AK21) | SUPPLIES 240 VAC POWER TO HOIST BRAKE CIRCUIT. | a. FAILS OPEN | LOSS OF POWER TO HOIST BRAKE CIRCUIT. HOIST BRAKES WILL SET. | NO EFFECT. | 3 |
| | | | a. FAILS SHORT | FUSE PROTECTING MAIN POWER WILL BLOW LOSS OF POWER TO HOIST BRAKE CIRCUIT. HOIST BRAKES WILL SET. | NO EFFECT. | 3 |
| FU7, FU8 | FUSE (3AG20, 3AG22) | PROTECT MAIN LINE FROM SHORT/OVERLOAD IN HOIST BRAKE. TRANSFORMER OR HOIST BRAKE POWER. | a. PREMATURE OPERATION | LOSS OF POWER TO HOIST BRAKE CIRCUIT. HOIST BRAKES WILL SET. | NO EFFECT. | 3 |
| | | | a. FAILS TO OPERATE | OPPOSING FUSE WILL PROTECT MAIN POWER LINE FROM OVERLOAD. LOSS OF POWER TO HOIST BRAKE CIRCUIT. HOIST BRAKES WILL SET. | NO EFFECT. | 3 |
| FU9 | FUSE (3AN20) | PROTECT HOIST BRAKE TRANSFORMER SECONDARY FROM SHORT/ OVERLOAD IN HOIST BRAKE CIRCUIT. | a. PREMATURE OPERATION | LOSS OF POWER TO HOIST BRAKE CIRCUIT. HOIST BRAKES WILL SET. | NO EFFECT. | 3 |
| | | | a. FAILS TO OPERATE | LOSS OF CURRENT OVERLOAD PRO-TECTION. WOULD REQUIRE PREVIOUS FAILURE OF A HOIST BRAKE CIRCUIT COMPONENT. | NO EFFECT. | 3 |

Table 12 (Page 16 of 16). **ELECTRICAL FMEA - MAIN POWER**

**System** 30-TON BRIDGE CRANE, OPF-3
**Subsystem** MAIN POWER
**Drawing No.** EDERER EB-2286 **Sheet No.**
**PMN** H70-1379-01

**Program** SPACE SHUTTLE

**Station Set/Facility Code** GD
**Date** MARCH 1991
**Reference Figure Used** NA
**Prepared By** P. CLUKEY, LSOC 51-22

| FIND NO. PART NO. | PART NAME | PART FUNCTION | a. FAILURE MODE b. CAUSE c. FMN d. DETECTION METHOD e. CORRECTING ACTION f. TIME TO EFFECT g. TIMEFRAME | FAILURE EFFECT ON SYSTEM PERFORMANCE | FAILURE EFFECT ON VEHICLE SYSTEMS AND/OR PERSONNEL SAFETY | CRIT CAT |
|---|---|---|---|---|---|---|
| TBT TA-1-81217 | TRAVEL BRAKE POWER TRANS-FORMER 1 KVA 480 - 120 V. (3AK27) | SUPPLIES 120 VAC POWER TO TROLLEY BRAKE CIRCUIT AND BRIDGE BRAKE CIRCUIT. | a. FAILS OPEN | LOSS OF POWER TO TROLLEY AND BRIDGE BRAKE CIRCUIT. TROLLEY AND BRIDGE BRAKES WILL SET. | NO EFFECT. | 3 |
| | | | a. FAILS SHORT | FUSE PROTECTING MAIN POWER WILL BLOW. LOSS OF POWER TO TROLLEY AND BRIDGE BRAKE CIRCUIT. TROLLEY AND BRIDGE BRAKES WILL SET. | NO EFFECT. | 3 |
| FU10 FU12 | FUSE (3AG27, 3AG29) | PROTECT MAIN POWER LINE FROM SHORT/OVERLOAD IN TRAVEL BRAKE TRANS-FORMER. | a. PREMATURE OPERATION | LOSS OF POWER TO TROLLEY AND BRIDGE BRAKE CIRCUIT. TROLLEY AND BRIDGE BRAKES WILL SET. | NO EFFECT. | 3 |
| | | | a. FAILS TO OPERATE | OPPOSING FUSE WILL PROTECT MAIN POWER LINE FROM OVERLOAD. LOSS OF POWER TO TROLLEY AND BRIDGE BRAKE CIRCUIT. TROLLEY AND BRIDGE BRAKES WILL SET. | NO EFFECT. | 3 |
| FU11 | FUSE (3AN26) | PROTECT TRAVEL BRAKE TRANSFORMER FROM SHORT/OVERLOAD IN BRIDGE OR TROLLEY BRAKE CIR-CUITS. | a. PREMATURE OPERATION | LOSS OF POWER TO BRIDGE AND TROLLEY BRAKE CIRCUITS. BRIDGE AND TROLLEY BRAKES WILL SET. | NO EFFECT. | 3 |
| | | | a. FAILS TO OPERATE | LOSS OF CURRENT OVERLOAD PRO-TECTION. WOULD REQUIRE PREVIOUS FAILURE OF A BRIDGE OR TROLLEY BRAKE CIRCUIT COMPONENT. | NO EFFECT. | 3 |

Table 13 (Page 1 of 4). **ELECTRICAL FMEA - SELSYN**

**System** 30-TON BRIDGE CRANE, OPF-3
**Subsystem** SELSYN
**Drawing No.** EDERER EB-2286 **Sheet No.** 18
**PMN** H70-1379-01

**Program** SPACE SHUTTLE

**Station Set/Facility Code** GD
**Date** MARCH 1991
**Reference Figure Used** NA
**Prepared By** P. CLUKEY, LSOC 51-22

| FIND NO. PART NO. | PART NAME | PART FUNCTION | a. FAILURE MODE b. CAUSE c. FMN d. DETECTION METHOD e. CORRECTING ACTION f. TIME TO EFFECT g. TIMEFRAME | FAILURE EFFECT ON SYSTEM PERFORMANCE | FAILURE EFFECT ON VEHICLE SYSTEMS AND/OR PERSONNEL SAFETY | CRIT CAT |
|---|---|---|---|---|---|---|
| NONE | NORTH/SOUTH SELSYN TRANS-MITTER SELECTOR SWITCH (18L2) | SELECTS EITHER NORTH OR SOUTH SELSYN TRANS-MITTER FOR HOIST SELSYN CIRCUIT. | a. FAILS OPEN | UNABLE TO SELECT SOUTH SELSYN TRANSMITTER. REQUIRES FAILURE OF NORTH SELSYN TRANSMITTER TO LOSE SELSYN POSITION INFORMA-TION. | NO EFFECT. | 3 |
| | | | a. FAILS CLOSED | UNABLE TO SELECT NORTH SELSYN TRANSMITTER. REQUIRES FAILURE OF SOUTH SELSYN TRANSMITTER TO LOSE SELSYN POSITION INFORMA-TION. | NO EFFECT. | 3 |
| SELR 700-P400A1 | HOIST SELSYN SELECTOR RELAY (18Q2, 18L8-12) | CONNECTS HOIST NORTH SELSYN TRANSMITTER TO HOIST SELSYN RECEIVER WHEN DE-ENERGIZED. SWITCHES TO HOIST SOUTH TRANSMITTER WHEN ENER-GIZED. | a. FAILS DEACTIVATED (DE-ENERGIZED POSI-TION) | UNABLE TO SELECT SOUTH SELSYN TRANSMITTER. REQUIRES FAILURE OF NORTH SELSYN TRANSMITTER TO LOSE SELSYN POSITION INFORMA-TION. | NO EFFECT. | 3 |
| | CONTACTS (18L8-10) | CONNECTS/DISCONNECTS NORTH HOIST SELSYN TRANSMITTER. | a. CONTACT FAILS CLOSED | NO EFFECT. PARALLEL SIGNAL PATH THROUGH NORTH SELSYN TRANS-MITTER WILL NOT EXIST. | NO EFFECT. | 3 |
| | | | a. CONTACT FAILS OPEN | LOSS OF SIGNAL FROM NORTH SELSYN TRANSMITTER. WOULD REQUIRE FAILURE IN SOUTH SELSYN TRANSMITTER TO LOSE POSITION INFORMATION. | NO EFFECT. | 3 |
| | CONTACTS (8L10-12) | CONNECTS/DISCONNECTS SOUTH HOIST SELSYN TRANSMITTER. | a. CONTACT FAILS OPEN | LOSS OF SIGNAL FROM SOUTH SELSYN TRANSMITTER. WOULD REQUIRE FAILURE IN NORTH SELSYN TRANSMITTER TO LOSE POSITION INFORMATION. | NO EFFECT. | 3 |

Table 13 (Page 2 of 4). **ELECTRICAL FMEA - SELSYN**

**System** 30-TON BRIDGE CRANE, OPF-3
**Subsystem** SELSYN
**Drawing No.** EDERER EB-2286 **Sheet No.** 18
**PMN** H70-1379-01

**Program** SPACE SHUTTLE

**Station Set/Facility Code** GD
**Date** MARCH 1991
**Reference Figure Used** NA
**Prepared By** P. CLUKEY, LSOC 51-22

| FIND NO. PART NO. | PART NAME | PART FUNCTION | a. FAILURE MODE<br>b. CAUSE<br>c. FMN<br>d. DETECTION METHOD<br>e. CORRECTING ACTION<br>f. TIME TO EFFECT<br>g. TIMEFRAME | FAILURE EFFECT ON SYSTEM PERFORMANCE | FAILURE EFFECT ON VEHICLE SYSTEMS AND/OR PERSONNEL SAFETY | CRIT CAT |
|---|---|---|---|---|---|---|
| | | | a. CONTACT FAILS CLOSED | NO EFFECT. PARALLEL SIGNAL PATH THROUGH SOUTH HOIST TRANSMITTER WILL NOT EXIST. | NO EFFECT. | 3 |
| NONE 2JA33-BB1 | NORTH HOIST SELSYN TRANSMITTER (8H5) | RELAYS ROTATIONAL INFORMATION FROM NORTH HOIST MOTOR TO HOIST SELSYN RECEIVER. | a. FAILS SHORT | SELSYN CIRCUIT BREAKER WILL PROTECT ACCESSORIES CIRCUIT FROM OVERLOAD. | NO EFFECT. | 3 |
| | | | a. FAILS OPEN | LOSS OF SIGNAL FROM NORTH HOIST SELSYN TRANSMITTER. WOULD REQUIRE FAILURE IN SOUTH HOIST SELSYN TRANSMITTER TO LOSE POSITION INFORMATION. | NO EFFECT. | 3 |
| NONE 2JDA66-PA10B | HOIST SELSYN RECEIVER (8S9) | RECEIVES ROTATIONAL INFORMATION FROM EITHER HOIST SELSYN TRANSMITTER AND MECHANICALLY DRIVES HOIST POSITION INDICATOR. | a. FAILS SHORT | SELSYN CIRCUIT BREAKER WILL PROTECT ACCESSORIES CIRCUIT FROM OVERLOAD. | NO EFFECT. | 3 |
| | | | a. FAILS OPEN | LOSS OF POSITION INDICATION FOR HOIST. CAB AMMETER WILL INDICATE ANY HOIST MOTION. | NO EFFECT. | 3 |
| NONE 2JA33-BB1 | SOUTH HOIST SELSYN TRANSMITTER (8H14) | RELAYS ROTATIONAL INFORMATION FROM SOUTH HOIST MOTOR TO HOIST SELSYN RECEIVER. | a. FAILS SHORT | SELSYN CIRCUIT BREAKER WILL PROTECT ACCESSORIES CIRCUIT FROM OVERLOAD. | NO EFFECT. | 3 |
| | | | a. FAILS OPEN | LOSS OF SIGNAL FROM SOUTH HOIST SELSYN TRANSMITTER. WOULD REQUIRE FAILURE IN NORTH HOIST SELSYN TRANSMITTER TO LOSE POSITION INFORMATION. | NO EFFECT. | 3 |

Table 13 (Page 3 of 4). **ELECTRICAL FMEA - SELSYN**

**System** 30-TON BRIDGE CRANE, OPF-3
**Subsystem** SELSYN
**Drawing No.** EDERER EB-2286 **Sheet No.** 18
**PMN** H70-1379-01

**Program** SPACE SHUTTLE

**Station Set/Facility Code** GD
**Date** MARCH 1991
**Reference Figure Used** NA
**Prepared By** P. CLUKEY, LSOC 51-22

| FIND NO. PART NO. | PART NAME | PART FUNCTION | a. FAILURE MODE<br>b. CAUSE<br>c. FMN<br>d. DETECTION METHOD<br>e. CORRECTING ACTION<br>f. TIME TO EFFECT<br>g. TIMEFRAME | FAILURE EFFECT ON SYSTEM PERFORMANCE | FAILURE EFFECT ON VEHICLE SYSTEMS AND/OR PERSONNEL SAFETY | CRIT CAT |
|---|---|---|---|---|---|---|
| NONE<br>2JA33-BB1 | TROLLEY SELSYN TRANS-MITTER (8H18) | RELAYS ROTATIONAL INFOR-MATION FROM TROLLEY MOTOR TO TROLLEY SELSYN RECEIVER. | a. FAILS SHORT | SELSYN CIRCUIT BREAKER WILL PROTECT ACCESSORIES CIRCUIT FROM OVERLOAD. | NO EFFECT. | 3 |
| | | | a. FAILS OPEN | LOSS OF SIGNAL TO TROLLEY SELSYN RECEIVER. CAB AMMETERS WILL INDICATE ANY TROLLEY MOTION. | NO EFFECT. | 3 |
| NONE<br>2JDA66-PA10B | TROLLEY SELSYN RECEIVER (8H23) | RECEIVES ROTATIONAL INFORMATION FROM TROLLEY SELSYN TRANS-MITTER AND MECHANICALLY DRIVES TROLLEY POSITION INDICATOR. | a. FAILS SHORT | SELSYN CIRCUIT BREAKER WILL PROTECT ACCESSORIES CIRCUIT FROM OVERLOAD. | NO EFFECT. | 3 |
| | | | a. FAILS OPEN | LOSS OF POSITION INDICATION FOR TROLLEY. CAB AMMETER WILL INDI-CATE ANY MOTION. | NO EFFECT. | 3 |
| NONE<br>2JA33-BB1 | BRIDGE SELSYN TRANS-MITTER (8H26) | RELAYS ROTATIONAL INFOR-MATION FROM BRIDGE WEST MOTOR TO BRIDGE SELSYN RECEIVER. | a. FAILS SHORT | SELSYN CIRCUIT BREAKER WILL PROTECT ACCESSORIES CIRCUIT FROM OVERLOAD. | NO EFFECT. | 3 |
| | | | a. FAILS OPEN | LOSS OF SIGNAL TO BRIDGE SELSYN RECEIVER. CAB AMMETER WILL INDI-CATE ANY BRIDGE MOTION. | NO EFFECT. | 3 |
| NONE<br>2JDA66-PA10B | BRIDGE SELSYN RECEIVER (8H30) | RECEIVES ROTATIONAL INFORMATION FROM BRIDGE SELSYN TRANSMITTER AND MECHANICALLY DRIVES BRIDGE POSITION INDI-CATOR. | a. FAILS SHORT | SELSYN CIRCUIT BREAKER WILL PROTECT ACCESSORIES CIRCUIT FROM OVERLOAD. | NO EFFECT. | 3 |

Table 13 (Page 4 of 4). **ELECTRICAL FMEA - SELSYN**

| | | | | | | |
|---|---|---|---|---|---|---|
| **System** 30-TON BRIDGE CRANE, OPF-3<br>**Subsystem** SELSYN<br>**Drawing No.** EDERER EB-2286 **Sheet No.** 18<br>**PMN** H70-1379-01 | | | **Program** SPACE SHUTTLE | | **Station Set/Facility Code** GD<br>**Date** MARCH 1991<br>**Reference Figure Used** NA<br>**Prepared By** P. CLUKEY, LSOC 51-22 | |
| **FIND NO. PART NO.** | **PART NAME** | **PART FUNCTION** | a. FAILURE MODE<br>b. CAUSE<br>c. FMN<br>d. DETECTION METHOD<br>e. CORRECTING ACTION<br>f. TIME TO EFFECT<br>g. TIMEFRAME | **FAILURE EFFECT ON SYSTEM PERFORMANCE** | **FAILURE EFFECT ON VEHICLE SYSTEMS AND/OR PERSONNEL SAFETY** | **CRIT CAT** |
| | | | a. FAILS OPEN | LOSS OF POSITION INDICATION FOR BRIDGE. CAB AMMETER WILL INDICATE ANY BRIDGE MOTION. | NO EFFECT. | 3 |

Table 14 (Page 1 of 35). **ELECTRICAL FMEA - BRIDGE**

**System** 30-TON BRIDGE CRANE, OPF-3
**Subsystem** BRIDGE
**Drawing No.** EDERER EB-2286 **Sheet No.**
**PMN** H70-1379-01

**Program** SPACE SHUTTLE

**Station Set/Facility Code** GD
**Date** MARCH 1991
**Reference Figure Used** NA
**Prepared By** P. CLUKEY, LSOC 51-22

| FIND NO. PART NO. | PART NAME | PART FUNCTION | a. FAILURE MODE<br>b. CAUSE<br>c. FMN<br>d. DETECTION METHOD<br>e. CORRECTING ACTION<br>f. TIME TO EFFECT<br>g. TIMEFRAME | FAILURE EFFECT ON SYSTEM PERFORMANCE | FAILURE EFFECT ON VEHICLE SYSTEMS AND/OR PERSONNEL SAFETY | CRIT CAT |
|---|---|---|---|---|---|---|
| FU31, 32<br>FRSR<br>4-1/2 | FUSE<br>(17K3, 4) | PROTECT CONTROL POWER FROM SHORT/OVERLOAD IN BRIDGE CONTROL CIRCUIT. | a. PREMATURE OPERATION | LOSS OF POWER TO BRIDGE CONTROL CIRCUIT. BRIDGE BRAKES WILL SET. | NO EFFECT. | 3 |
| | | | a. FAILS TO OPERATE | OPPOSING FUSE WILL PROTECT CONTROL POWER FROM SHORT/ OVERLOAD IN BRIDGE CONTROL CIRCUIT. REQUIRES PREVIOUS FAILURE IN BRIDGE CONTROL CIRCUIT. | NO EFFECT. | 3 |
| BCT<br>TA-1-81216 | BRIDGE CONTROL TRANS-FORMER<br>(17N5) | PROVIDES 120 VAC POWER TO BRIDGE CONTROL CIRCUIT AND BRIDGE TRAVEL INTERFACE MODULE. | a. FAILS OPEN | LOSS OF POWER TO BRIDGE CONTROL CIRCUIT. BRIDGE BRAKES WILL SET. | NO EFFECT. | 3 |
| | | | a. FAILS SHORTED | LOSS OF POWER TO BRIDGE CONTROL CIRCUIT. BRIDGE BRAKES WILL SET. FU31, 32 WILL PROTECT CONTROL POWER. | NO EFFECT. | 3 |
| FU33<br>FRNR 10 | FUSE<br>(17G6) | PROTECTS BRIDGE CONTROL TRANSFORMER FROM SHORT/OVERLOAD IN BRIDGE CONTROL CIRCUIT. | a. PREMATURE OPERATION | LOSS OF POWER TO BRIDGE CONTROL CIRCUIT. BRIDGE BRAKES WILL SET. | NO EFFECT. | 3 |
| | | | a. FAILS TO OPERATE | LOSS OF CURRENT OVERLOAD PRO-TECTION, WOULD REQUIRE PREVIOUS FAILURE IN BRIDGE CONTROL CIRCUIT. | NO EFFECT. | 3 |
| FU34<br>FNM 1/2 | FUSE<br>(17K7) | PROTECT AGAINST SHORT/OVERLOAD IN BRIDGE POWER SUPPLY AND ASSOCI-ATED CIRCUIT. | a. PREMATURE OPERATION | LOSS OF POWER TO BRIDGE POWER SUPPLY AND ASSOCIATED CIRCUIT. BRIDGE OVERSPEED RELAY WILL DE-ENERGIZE. NORMALLY CLOSED CONTACTS (3L26) WILL CLOSE AND TRIP SHUNT MAIN CIRCUIT BREAKER. ALL BRAKES WILL SET. | NO EFFECT. | 3 |

Table 14 (Page 2 of 35). **ELECTRICAL FMEA - BRIDGE**

**System** 30-TON BRIDGE CRANE, OPF-3
**Subsystem** BRIDGE
**Drawing No.** EDERER EB-2286 **Sheet No.**
**PMN** H70-1379-01

**Program** SPACE SHUTTLE

**Station Set/Facility Code** GD
**Date** MARCH 1991
**Reference Figure Used** NA
**Prepared By** P. CLUKEY, LSOC 51-22

| FIND NO. PART NO. | PART NAME | PART FUNCTION | a. FAILURE MODE b. CAUSE c. FMN d. DETECTION METHOD e. CORRECTING ACTION f. TIME TO EFFECT g. TIMEFRAME | FAILURE EFFECT ON SYSTEM PERFORMANCE | FAILURE EFFECT ON VEHICLE SYSTEMS AND/OR PERSONNEL SAFETY | CRIT CAT |
|---|---|---|---|---|---|---|
| | | | a. FAILS TO OPERATE | FU33 (17G6) WILL PROTECT BRIDGE CONTROL TRANSFORMER FROM SHORT/OVERLOAD IN BRIDGE POWER SUPPLY. REQUIRES PREVIOUS FAILURE IN BRIDGE POWER SUPPLY CIRCUIT. | NO EFFECT. | 3 |
| BPT 700-PT200A1 | BRIDGE POWER UP RESET TIMER RELAY (17S8, 3J26, 17D10, 17Q10) | PROVIDES DELAY TO ALLOW OVERSPEED CIRCUIT TO PULL IN AND HOLD DURING POWER UP. | a. FAILS DEACTIVATED (DE-ENERGIZED POSITION) | CONTACTS (17D10) WILL NOT ALLOW POWER TO REACH BRIDGE CONTROL CIRCUIT. BRIDGE MOTOR BRAKES WILL SET. | NO EFFECT. | 3 |
| | CONTACT (3J26) | PROVIDES 1 SECOND DELAY TO ALLOW BRIDGE OVERSPEED CONTACT TO OPEN BEFORE TRIPPING MCB. | a. FAILS OPEN | BRIDGE OVERSPEED CONDITION WILL NOT SHUT DOWN THE CRANE. REQUIRES PREVIOUS FAILURE IN BRIDGE MOTOR CONTROL CIRCUIT. | NO EFFECT. | 3 |
| | | | a. FAILS CLOSED | MCB WILL TRIP WHEN POWER IS APPLIED TO THE CRANE, SHUTTING DOWN CRANE. | NO EFFECT. | 3 |
| | CONTACT (17D10) | ALLOWS POWER TO REACH BRIDGE CONTROL CIRCUIT. | a. FAILS OPEN | LOSS OF POWER TO BRIDGE CONTROLS. BRIDGE MOTOR BRAKES WILL SET. | NO EFFECT. | 3 |
| | | | a. FAILS CLOSED | NO EFFECT. BRIDGE OVERSPEED CONTACT WILL BREAK CIRCUIT. | NO EFFECT. | 3 |
| | CONTACT (17Q10) | ALLOW BRIDGE OVERSPEED RELAY TO PULL IN AND HOLD. | a. FAILS OPEN | BRIDGE OVERSPEED RELAY WILL NOT ENERGIZE. BRIDGE CONTROLS WILL NOT BE ENERGIZED AND MCB WILL TRIP AFTER 1 SECOND WHEN BPT CONTACT (3J26) CLOSES. ALL BRAKES WILL SET. | NO EFFECT. | 3 |

Table 14 (Page 3 of 35). **ELECTRICAL FMEA - BRIDGE**

**System** 30-TON BRIDGE CRANE, OPF-3
**Subsystem** BRIDGE
**Drawing No.** EDERER EB-2286 **Sheet No.**
**PMN** H70-1379-01

**Program** SPACE SHUTTLE

**Station Set/Facility Code** GD
**Date** MARCH 1991
**Reference Figure Used** NA
**Prepared By** P. CLUKEY, LSOC 51-22

| FIND NO. PART NO. | PART NAME | PART FUNCTION | a. FAILURE MODE b. CAUSE c. FMN d. DETECTION METHOD e. CORRECTING ACTION f. TIME TO EFFECT g. TIMEFRAME | FAILURE EFFECT ON SYSTEM PERFORMANCE | FAILURE EFFECT ON VEHICLE SYSTEMS AND/OR PERSONNEL SAFETY | CRIT CAT |
|---|---|---|---|---|---|---|
| | | | a. FAILS CLOSED | NO EFFECT. CRANE WILL SHUT DOWN ON OVERSPEED. | NO EFFECT. | 3 |
| BOSR 700-P200A1 | BRIDGE OVERSPEED RELAY (17S9, 3L26, 17Q9, 17D12) | TRIP MCB, SHUTTING DOWN CRANE ON OVERSPEED. | a. FAILS DEACTIVATED (DE-ENERGIZED POSITION) | MCB WILL TRIP WHEN BPT CONTACT (3J26) CLOSES AFTER A 1 SECOND TIME DELAY. ALL BRAKES WILL SET. | NO EFFECT. | 3 |
| | CONTACT, NORMALLY CLOSED (3L26) | CLOSES ON OVERSPEED TO TRIP MCB, SHUTTING DOWN CRANE. | a. FAILS OPEN | BRIDGE OVERSPEED CONDITION WILL NOT SHUT DOWN CRANE. REQUIRES PREVIOUS FAILURE IN BRIDGE MOTOR CONTROL CIRCUIT. | NO EFFECT. | 3 |
| | | | a. FAILS CLOSED | MCB WILL TRIP WHEN BPT CONTACT (3J26) CLOSES AFTER A 1 SECOND DELAY. ALL BRAKES WILL SET. | NO EFFECT. | 3 |
| | CONTACT (17D12) | ALLOWS POWER TO REACH BRIDGE CONTROL CIRCUIT. | a. FAILS OPEN | LOSS OF POWER TO BRIDGE CONTROLS. BRIDGE MOTOR BRAKES WILL SET. | NO EFFECT. | 3 |
| | | | a. FAILS CLOSED | NO EFFECT. BPT CONTACT WILL BREAK CIRCUIT. | NO EFFECT. | 3 |
| | CONTACT (17Q9) | HOLDS BRIDGE OVERSPEED RELAY ENERGIZED AFTER BPT CONTACT TIMES OUT. | a. FAILS OPEN | MCB WILL TRIP WHEN BRIDGE OVERSPEED RELAY DE-ENERGIZES. ALL BRAKES WILL SET. | NO EFFECT. | 3 |
| | | | a. FAILS CLOSED | NO EFFECT. CRANE WILL SHUT DOWN ON OVERSPEED. ALL BRAKES WILL SET. | NO EFFECT. | 3 |
| NONE T8115 | EAST MOTOR WARNING THERMISTOR (17J11) | MEASURES THE TEMPERATURE OF THE EAST BRIDGE MOTOR. | a. FAILS OPEN | EAST MOTOR OVERTEMP WARNING ON CONTINUOUSLY. | NO EFFECT. | 3 |

Table 14 (Page 4 of 35). **ELECTRICAL FMEA - BRIDGE**

**System** 30-TON BRIDGE CRANE, OPF-3
**Subsystem** BRIDGE
**Drawing No.** EDERER EB-2286 **Sheet No.**
**PMN** H70-1379-01

**Program** SPACE SHUTTLE

**Station Set/Facility Code** GD
**Date** MARCH 1991
**Reference Figure Used** NA
**Prepared By** P. CLUKEY, LSOC 51-22

| FIND NO. PART NO. | PART NAME | PART FUNCTION | a. FAILURE MODE b. CAUSE c. FMN d. DETECTION METHOD e. CORRECTING ACTION f. TIME TO EFFECT g. TIMEFRAME | FAILURE EFFECT ON SYSTEM PERFORMANCE | FAILURE EFFECT ON VEHICLE SYSTEMS AND/OR PERSONNEL SAFETY | CRIT CAT |
|---|---|---|---|---|---|---|
| | | | a. FAILS SHORT | LOSS OF OVERTEMP WARNING. EAST MOTOR OVERTEMP SHUTDOWN WILL SHUTDOWN BRIDGE IF OVERTEMP OCCURS. | NO EFFECT. | 3 |
| BEMTW 135101 | BRIDGE EAST MOTOR OVERTEM-PERATURE WARNING MODULE (17J13) | MONITORS EAST MOTOR WARNING THERMISTOR AND CONTROLS OVERTEMP WARNING LIGHT. | a. LOW OR NO OUTPUT | LOSS OF OVERTEMP WARNING. BEMTS (OVERTEMP SHUTDOWN) WILL SHUTDOWN BRIDGE IF OVERTEMP OCCURS. | NO EFFECT. | 3 |
| | | | a. HIGH OR CONTINUOUS OUTPUT | OVERTEMP WARNING ILLUMINATED CONTINUOUSLY. BRIDGE WILL OPERATE NORMALLY. | NO EFFECT. | 3 |
| NONE 9001-KP-1 | EAST MOTOR OVERTEMP WARNING LIGHT (17U13) | INDICATES AN ABOVE NORMAL OPERATING TEM-PERATURE. | a. FAILS OPEN | LOSS OF OVERTEMP WARNING. BEMTS (OVERTEMP SHUTDOWN) WILL SHUTDOWN BRIDGE IF OVERTEMP OCCURS. | NO EFFECT. | 3 |
| | | | a. FAILS SHORT | CURRENT OVERLOAD WILL BLOW FU33. BRIDGE CONTROLS WILL DE-ENERGIZE AND BRIDGE BRAKES WILL SET. | NO EFFECT. | 3 |
| NONE T8155 | EAST MOTOR SHUTDOWN THERMISTOR (17O11) | MEASURES THE TEMPER-ATURE OF THE EAST BRIDGE MOTOR. | a. FAILS OPEN | BEMTS (OVERTEMP SHUTDOWN) WILL DE-ENERGIZE BEOH RELAY AND ENER-GIZE OVERTEMP SHUTDOWN INDI-CATOR. BEOH RELAY WILL SHUTDOWN BRIDGE AND SET BRAKES. | NO EFFECT. | 3 |
| | | | a. FAILS SHORT | LOSS OF OVERTEMP SHUTDOWN. BEMTW WILL WARN OF OVERHEAT CONDITION. | NO EFFECT. | 3 |

Table 14 (Page 5 of 35). **ELECTRICAL FMEA - BRIDGE**

**System** 30-TON BRIDGE CRANE, OPF-3
**Subsystem** BRIDGE
**Drawing No.** EDERER EB-2286 **Sheet No.**
**PMN** H70-1379-01

**Program** SPACE SHUTTLE

**Station Set/Facility Code** GD
**Date** MARCH 1991
**Reference Figure Used** NA
**Prepared By** P. CLUKEY, LSOC 51-22

| FIND NO. PART NO. | PART NAME | PART FUNCTION | a. FAILURE MODE<br>b. CAUSE<br>c. FMN<br>d. DETECTION METHOD<br>e. CORRECTING ACTION<br>f. TIME TO EFFECT<br>g. TIMEFRAME | FAILURE EFFECT ON SYSTEM PERFORMANCE | FAILURE EFFECT ON VEHICLE SYSTEMS AND/OR PERSONNEL SAFETY | CRIT CAT |
|---|---|---|---|---|---|---|
| BEMTS 135101 | BRIDGE EAST MOTOR OVERTEM-PERATURE SHUTDOWN MODULE (17015) | MONITORS EAST MOTOR OVERTEMP SHUTDOWN THERMISTOR, CONTROLS SHUTDOWN INDICATOR AND RELAY. | a. LOW OR NO OUTPUT | LOSS OF OVERTEMP SHUTDOWN. BEMTW WILL WARN OF OVERHEAT CONDITION. | NO EFFECT. | 3 |
| | | | a. HIGH OR CONTINUOUS OUTPUT | BEOH WILL BE ENERGIZED, SHUTTING DOWN BRIDGE AND SETTING BRAKES. SHUTDOWN INDICATOR WILL BE ON. | NO EFFECT. | 3 |
| NONE 9001-KP-1R9 | BRIDGE EAST MOTOR OVERTEMP SHUTDOWN LIGHT (17U14) | INDICATES WHEN SHUTDOWN DUE TO OVERTEMP HAS OCCURRED. | a. FAILS OPEN | LOSS OF SHUTDOWN INDICATION. BRIDGE WILL SHUTDOWN AND BRAKES WILL SET ON OVERHEAT. | NO EFFECT. | 3 |
| | | | a. FAILS SHORT | CURRENT OVERLOAD WILL BLOW FU33. BRIDGE CONTROLS WILL DE-ENERGIZE AND BRAKES WILL SET. | NO EFFECT. | 3 |
| BEOH 700-P200A1 | BRIDGE EAST OVERTEMP SHUTDOWN RELAY (17T16, 17AF15) | DE-ENERGIZES WHEN BEMTS DETECTS OVERHEAT CONDI-TION. | a. FAILS DEACTIVATED (DE-ENERGIZED POSI-TION) | BRIDGE WILL SHUT DOWN AND BRAKES WILL SET. | NO EFFECT. | 3 |
| | | CONTACTS (17AF15) | a. FAILS OPEN | BRIDGE RUN RELAY (BR) WILL NOT ENERGIZE. BRIDGE WILL SHUTDOWN AND BRAKES WILL SET. | NO EFFECT. | 3 |

Table 14 (Page 6 of 35). **ELECTRICAL FMEA - BRIDGE**

**System** 30-TON BRIDGE CRANE, OPF-3
**Subsystem** BRIDGE
**Drawing No.** EDERER EB-2286 **Sheet No.**
**PMN** H70-1379-01

**Program** SPACE SHUTTLE

**Station Set/Facility Code** GD
**Date** MARCH 1991
**Reference Figure Used** NA
**Prepared By** P. CLUKEY, LSOC 51-22

| FIND NO. PART NO. | PART NAME | PART FUNCTION | a. FAILURE MODE<br>b. CAUSE<br>c. FMN<br>d. DETECTION METHOD<br>e. CORRECTING ACTION<br>f. TIME TO EFFECT<br>g. TIMEFRAME | FAILURE EFFECT ON SYSTEM PERFORMANCE | FAILURE EFFECT ON VEHICLE SYSTEMS AND/OR PERSONNEL SAFETY | CRIT CAT |
|---|---|---|---|---|---|---|
| | | | a. FAILS CLOSED | LOSS OF AUTOMATIC BRIDGE SHUT-DOWN ON OVERHEAT. RED INDI-CATOR IN CAB WILL INDICATE OVERHEAT CONDITION. | NO EFFECT. | 3 |
| NONE<br>T8115 | WEST MOTOR WARNING THERMISTOR (17J18) | MEASURES THE TEMPER-ATURE OF THE WEST BRIDGE MOTOR. | a. FAILS OPEN | WEST MOTOR OVERTEMP WARNING ON CONTINUOUSLY. | NO EFFECT. | 3 |
| | | | a. FAILS SHORT | LOSS OF OVERTEMP WARNING. WEST MOTOR OVERTEMP SHUTDOWN WILL SHUTDOWN BRIDGE IF OVERTEMP OCCURS. | NO EFFECT. | 3 |
| BWMTW<br>135101 | BRIDGE WEST MOTOR OVERTEM-PERATURE WARNING MODULE (17J20) | MONITORS WEST MOTOR WARNING THERMISTOR AND CONTROLS OVERTEMP WARNING LIGHT. | a. LOW OR NO OUTPUT | LOSS OF OVERTEMP WARNING. BWMTS (OVERTEMP SHUTDOWN) WILL SHUTDOWN BRIDGE IF OVERTEMP OCCURS. | NO EFFECT. | 3 |
| | | | a. HIGH OR CONTINUOUS OUTPUT | OVERTEMP WARNING ILLUMINATED CONTINUOUSLY. BRIDGE WILL OPERATE NORMALLY. | NO EFFECT. | 3 |
| NONE<br>9001-KP-1 | WEST MOTOR OVERTEMP WARNING LIGHT (17U20) | INDICATES AN ABOVE NORMAL OPERATING TEM-PERATURE. | a. FAILS OPEN | LOSS OF OVERTEMP WARNING. BWMTS (OVERTEMP SHUTDOWN) WILL SHUTDOWN BRIDGE IF OVERTEMP OCCURS. | NO EFFECT. | 3 |
| | | | a. FAILS SHORT | CURRENT OVERLOAD WILL BLOW FU33. BRIDGE CONTROLS WILL DE-ENERGIZE AND BRIDGE BRAKES WILL SET. | NO EFFECT. | 3 |

Table 14 (Page 7 of 35). **ELECTRICAL FMEA - BRIDGE**

**System** 30-TON BRIDGE CRANE, OPF-3
**Subsystem** BRIDGE
**Drawing No.** EDERER EB-2286 **Sheet No.**
**PMN** H70-1379-01

**Program** SPACE SHUTTLE

**Station Set/Facility Code** GD
**Date** MARCH 1991
**Reference Figure Used** NA
**Prepared By** P. CLUKEY, LSOC 51-22

| FIND NO. PART NO. | PART NAME | PART FUNCTION | a. FAILURE MODE b. CAUSE c. FMN d. DETECTION METHOD e. CORRECTING ACTION f. TIME TO EFFECT g. TIMEFRAME | FAILURE EFFECT ON SYSTEM PERFORMANCE | FAILURE EFFECT ON VEHICLE SYSTEMS AND/OR PERSONNEL SAFETY | CRIT CAT |
|---|---|---|---|---|---|---|
| NONE T8155 | WEST MOTOR SHUTDOWN THERMISTOR (17O23) | MEASURES THE TEMPERATURE OF THE WEST BRIDGE MOTOR. | a. FAILS OPEN | BWMTS (OVERTEMP SHUTDOWN) WILL DE-ENERGIZE BWOH RELAY AND ENERGIZE OVERTEMP SHUTDOWN INDICATOR. BWOH RELAY WILL SHUTDOWN BRIDGE AND SET BRAKES. | NO EFFECT. | 3 |
| | | | a. FAILS SHORT | LOSS OF OVERTEMP SHUTDOWN. BWMTW WILL WARN OF OVERHEAT CONDITION. | NO EFFECT. | 3 |
| BWMTS 135101 | BRIDGE WEST MOTOR OVERTEMPERATURE SHUTDOWN MODULE (17021) | MONITORS WEST MOTOR OVERTEMP SHUTDOWN THERMISTOR, CONTROLS SHUTDOWN INDICATOR AND RELAY. | a. LOW OR NO OUTPUT | LOSS OF OVERTEMP SHUTDOWN. BWMTW WILL WARN OF OVERHEAT CONDITION. | NO EFFECT. | 3 |
| | | | a. HIGH OR CONTINUOUS OUTPUT | BWOH WILL BE ENERGIZED, SHUTTING DOWN BRIDGE AND SETTING BRAKES. SHUTDOWN INDICATOR WILL BE ON. | NO EFFECT. | 3 |
| NONE 9001-KP-1R9 | BRIDGE WEST MOTOR OVERTEMP SHUTDOWN LIGHT (17U21) | INDICATES WHEN SHUTDOWN DUE TO OVERTEMP HAS OCCURRED. | a. FAILS OPEN | LOSS OF SHUTDOWN INDICATION. BRIDGE WILL SHUTDOWN AND BRAKES WILL SET ON OVERHEAT. | NO EFFECT. | 3 |
| | | | a. FAILS SHORT | CURRENT OVERLOAD WILL BLOW FU33. BRIDGE CONTROLS WILL DE-ENERGIZE AND BRAKES WILL SET. | NO EFFECT. | 3 |

Table 14 (Page 8 of 35). **ELECTRICAL FMEA - BRIDGE**

**System** 30-TON BRIDGE CRANE, OPF-3
**Subsystem** BRIDGE
**Drawing No.** EDERER EB-2286 **Sheet No.**
**PMN** H70-1379-01

**Program** SPACE SHUTTLE

**Station Set/Facility Code** GD
**Date** MARCH 1991
**Reference Figure Used** NA
**Prepared By** P. CLUKEY, LSOC 51-22

| FIND NO. PART NO. | PART NAME | PART FUNCTION | a. FAILURE MODE<br>b. CAUSE<br>c. FMN<br>d. DETECTION METHOD<br>e. CORRECTING ACTION<br>f. TIME TO EFFECT<br>g. TIMEFRAME | FAILURE EFFECT ON SYSTEM PERFORMANCE | FAILURE EFFECT ON VEHICLE SYSTEMS AND/OR PERSONNEL SAFETY | CRIT CAT |
|---|---|---|---|---|---|---|
| BWOH 700-P200A1 | BRIDGE WEST OVERTEMP SHUTDOWN RELAY (17T16, 17AF22) | DE-ENERGIZES WHEN BWMTS DETECTS OVERHEAT CONDITION. | a. FAILS DEACTIVATED (DE-ENERGIZED POSITION) | BRIDGE WILL SHUT DOWN AND BRAKES WILL SET. | NO EFFECT. | 3 |
| | | CONTACTS (17AJ15) | a. FAILS OPEN | BRIDGE RUN RELAY (BR) WILL NOT ENERGIZE. BRIDGE WILL SHUTDOWN AND BRAKES WILL SET. | NO EFFECT. | 3 |
| | | | a. FAILS CLOSED | LOSS OF AUTOMATIC BRIDGE SHUTDOWN ON OVERHEAT. RED INDICATOR IN CAB WILL INDICATE OVERHEAT CONDITION. | NO EFFECT. | 3 |
| TRAVEL 9001-KS-11B | SPEED SELECTOR SWITCH (17K25) | CLOSES TO ENERGIZE FULL SPEED RELAY (BFS). | a. FAILS OPEN | BRIDGE WILL RUN IN SLOW SPEED RANGE FOR BOTH SWITCH POSITIONS. | NO EFFECT. | 3 |
| | NOTE: DOES NOT COMPLY WITH NSS/GO-1740.9 REQUIREMENTS WITH REGARD TO OPERATION AT HIGHER SPEEDS THAN SELECTED. | | a. FAILS CLOSED<br>b. STUCK/WELDED CONTACTS<br>c. NA<br>d. VISUAL<br>e. RELEASE MASTER SWITCH, STOP, OR E-STOP<br>f. 7.8 SECONDS (MIN)<br>g. 3 SECONDS | BRIDGE WILL REMAIN IN HIGH SPEED RANGE. | NO EFFECT. THERE IS SUFFICIENT TIME FOR OPERATOR TO REACT. SEE SECTION 2.2.a. | 3 |

Table 14 (Page 9 of 35). **ELECTRICAL FMEA - BRIDGE**

**System** 30-TON BRIDGE CRANE, OPF-3
**Subsystem** BRIDGE
**Drawing No.** EDERER EB-2286 **Sheet No.**
**PMN** H70-1379-01

**Program** SPACE SHUTTLE

**Station Set/Facility Code** GD
**Date** MARCH 1991
**Reference Figure Used** NA
**Prepared By** P. CLUKEY, LSOC 51-22

| FIND NO. PART NO. | PART NAME | PART FUNCTION | a. FAILURE MODE<br>b. CAUSE<br>c. FMN<br>d. DETECTION METHOD<br>e. CORRECTING ACTION<br>f. TIME TO EFFECT<br>g. TIMEFRAME | FAILURE EFFECT ON SYSTEM PERFORMANCE | FAILURE EFFECT ON VEHICLE SYSTEMS AND/OR PERSONNEL SAFETY | CRIT CAT |
|---|---|---|---|---|---|---|
| BFS 700-P200A1 | BRIDGE FULL SPEED RELAY (17S25) | CONTACT CLOSES TO ENERGIZE BNS RELAY TO ENABLE HIGH SPEED RANGE. | a. FAILS DEACTIVATED (DE-ENERGIZED POSITION) | BRIDGE WILL RUN IN SLOW SPEED RANGE WHEN EITHER SPEED RANGE SELECTED. | NO EFFECT. | 3 |
| | CONTACT (17Q26) | | a. FAILS OPEN | BRIDGE WILL RUN IN SLOW SPEED RANGE WHEN EITHER SPEED RANGE SELECTED. | NO EFFECT. | 3 |
| | NOTE: DOES NOT COMPLY WITH NSS/GO-1740.9 REQUIREMENTS WITH REGARD TO OPERATION AT HIGHER SPEEDS THAN SELECTED. | | a. FAILS CLOSED<br>b. STUCK/WELDED CONTACTS<br>c. NA<br>d. VISUAL<br>e. RELEASE MASTER SWITCH, STOP, OR E-STOP<br>f. 7.8 SECONDS<br>g. 3 SECONDS | BRIDGE WILL REMAIN IN HIGH SPEED RANGE. | NO EFFECT. THERE IS SUFFICIENT TIME FOR OPERATOR TO REACT. SEE SECTION 2.2.a. | 3 |
| BNS 8501-RS-24 | BRIDGE NORMAL SPEED RELAY (17S26) | ENERGIZES TO ENABLE HIGH SPEED. CONTACTS CONTROL HIGH/SLOW SPEED INPUT LINES TO BTIM. | a. FAILS DEACTIVATED (DE-ENERGIZED POSITION) | BRIDGE WILL RUN IN SLOW SPEED RANGE WHEN EITHER SPEED RANGE SELECTED. | NO EFFECT. | 3 |
| | CONTACT (NORMALLY CLOSED, 16N14) | OPENS TO DE-ENERGIZE SLOW SPEED INPUT TO BTIM. | a. FAILS OPEN | BRIDGE WILL RUN NORMALLY IN HIGH SPEED RANGE. OVERSPEED WILL TRIP IF MOTION IS ATTEMPTED IN SLOW SPEED RANGE. | NO EFFECT. | 3 |
| | | | a. FAILS CLOSED | BRIDGE WILL RUN IN SLOW SPEED RANGE REGARDLESS OF RANGE SELECTED. | NO EFFECT. | 3 |

Table 14 (Page 10 of 35). **ELECTRICAL FMEA - BRIDGE**

**System** 30-TON BRIDGE CRANE, OPF-3
**Subsystem** BRIDGE
**Drawing No.** EDERER EB-2286 **Sheet No.**
**PMN** H70-1379-01

**Program** SPACE SHUTTLE

**Station Set/Facility Code** GD
**Date** MARCH 1991
**Reference Figure Used** NA
**Prepared By** P. CLUKEY, LSOC 51-22

| FIND NO. PART NO. | PART NAME | PART FUNCTION | a. FAILURE MODE b. CAUSE c. FMN d. DETECTION METHOD e. CORRECTING ACTION f. TIME TO EFFECT g. TIMEFRAME | FAILURE EFFECT ON SYSTEM PERFORMANCE | FAILURE EFFECT ON VEHICLE SYSTEMS AND/OR PERSONNEL SAFETY | CRIT CAT |
|---|---|---|---|---|---|---|
| | CONTACT (16M14) | CLOSES TO ENERGIZE NORMAL SPEED INPUT TO BTIM. | a. FAILS OPEN | BRIDGE WILL RUN NORMALLY IN SLOW SPEED RANGE. OVERSPEED WILL TRIP WHEN MOTION IS ATTEMPTED IN HIGH SPEED RANGE. | NO EFFECT. | 3 |
| | | | a. FAILS CLOSED | BRIDGE WILL RUN NORMALLY IN BOTH SPEED RANGES. | NO EFFECT. | 3 |
| NONE IC9445A-200A | SLOW NORTH LIMIT SWITCH (17H25) | DISABLES HIGH SPEED BRIDGE TRAVEL TO THE NORTH WHEN BRIDGE CLOSES TO WITHIN 76 INCHES OF NORTH WALL. | a. FAILS OPEN | BRIDGE WILL NOT TRAVEL NORTH IN HIGH SPEED. | NO EFFECT. | 3 |
| | | | a. FAILS CLOSED | BRIDGE MAY RUN NORTH IN HIGH SPEED RANGE UNTIL NORTH FINAL LIMIT SWITCH PREVENTS FURTHER NORTH TRAVEL. | NO EFFECT. | 3 |
| NONE IC9445A-200A | SLOW SOUTH LIMIT SWITCH (17M25) | DISABLES HIGH SPEED BRIDGE TRAVEL TO THE SOUTH WHEN BRIDGE CLOSES TO WITHIN 76 INCHES OF SOUTH WALL. | a. FAILS OPEN | BRIDGE WILL NOT TRAVEL SOUTH IN HIGH SPEED. | NO EFFECT. | 3 |
| | | | a. FAILS CLOSED | BRIDGE MAY RUN SOUTH IN HIGH SPEED RANGE UNTIL SOUTH FINAL LIMIT SWITCH PREVENTS FURTHER SOUTH TRAVEL. OPERATOR CAN STOP BRIDGE MOTION BY CENTERING MASTER SWITCH, PRESSING STOP OR E-STOP. | NO EFFECT. | 3 |
| NONE IC9445A-200A | FINAL NORTH LIMIT SWITCH (17H27) | DISABLES BRIDGE NORTH TRAVEL WHEN BRIDGE CLOSES TO WITHIN 48 INCHES OF NORTH WALL. | a. FAILS OPEN | BRIDGE WILL NOT RUN IN NORTH DIRECTION. | NO EFFECT. | 3 |

Table 14 (Page 11 of 35). **ELECTRICAL FMEA - BRIDGE**

**System** 30-TON BRIDGE CRANE, OPF-3
**Subsystem** BRIDGE
**Drawing No.** EDERER EB-2286 **Sheet No.**
**PMN** H70-1379-01

**Program** SPACE SHUTTLE

**Station Set/Facility Code** GD
**Date** MARCH 1991
**Reference Figure Used** NA
**Prepared By** P. CLUKEY, LSOC 51-22

| FIND NO. PART NO. | PART NAME | PART FUNCTION | a. FAILURE MODE<br>b. CAUSE<br>c. FMN<br>d. DETECTION METHOD<br>e. CORRECTING ACTION<br>f. TIME TO EFFECT<br>g. TIMEFRAME | FAILURE EFFECT ON SYSTEM PERFORMANCE | FAILURE EFFECT ON VEHICLE SYSTEMS AND/OR PERSONNEL SAFETY | CRIT CAT |
|---|---|---|---|---|---|---|
| | | | a. FAILS CLOSED | BRIDGE NORTH TRAVEL MAY CONTINUE IN SLOW SPEED UNTIL NORTH CRANE STOPS PREVENT FURTHER NORTH BRIDGE TRAVEL. OPERATOR CAN STOP BRIDGE MOTION BY CENTERING MASTER SWITCH, PRESSING STOP OR E-STOP. | NO EFFECT. | 3 |
| NONE IC9445A-200A | FINAL SOUTH LIMIT SWITCH (17M27) | DISABLES BRIDGE SOUTH TRAVEL WHEN BRIDGE CLOSES TO WITHIN 48 INCHES OF SOUTH WALL. | a. FAILS OPEN | BRIDGE WILL NOT RUN IN SOUTH DIRECTION. | NO EFFECT. | 3 |
| | | | a. FAILS CLOSED | BRIDGE SOUTH TRAVEL MAY CONTINUE IN SLOW SPEED UNTIL SOUTH CRANE STOPS PREVENT FURTHER SOUTH BRIDGE TRAVEL. OPERATOR CAN STOP BRIDGE MOTION BY CENTERING MASTER SWITCH, PRESSING STOP OR E-STOP. | NO EFFECT. | 3 |
| BL 700-P200A1 | BRIDGE LIMITS RELAY (17S28) | ALLOWS BRIDGE BRAKES TO RELEASE AND DRIVE TO BE ENABLED WHEN A FINAL LIMIT SWITCH IS NOT TRIPPED. | a. FAILS DEACTIVATED (DE-ENERGIZED POSITION) | BRIDGE DRIVE WILL NOT RUN. BRAKES WILL (REMAIN) SET. | NO EFFECT. | 3 |
| | CONTACTS (17AG16) | CLOSES TO ENERGIZE BBR AND BDE. | a. FAILS OPEN | BRIDGE DRIVE WILL NOT RUN. BRAKES WILL (REMAIN) SET. | NO EFFECT. | 3 |
| | | | a. FAILS CLOSED | BRIDGE TRAVEL MAY CONTINUE PAST FINAL LIMIT SWITCH IN SLOW SPEED RANGE UNTIL CRANE STOPS PREVENT FURTHER BRIDGE TRAVEL. OPERATOR CAN STOP BRIDGE MOTION BY CENTERING MASTER SWITCH, PRESSING STOP OR E-STOP. | NO EFFECT. | 3 |

Table 14 (Page 12 of 35). **ELECTRICAL FMEA - BRIDGE**

**System** 30-TON BRIDGE CRANE, OPF-3
**Subsystem** BRIDGE
**Drawing No.** EDERER EB-2286 **Sheet No.**
**PMN** H70-1379-01

**Program** SPACE SHUTTLE

**Station Set/Facility Code** GD
**Date** MARCH 1991
**Reference Figure Used** NA
**Prepared By** P. CLUKEY, LSOC 51-22

| FIND NO. PART NO. | PART NAME | PART FUNCTION | a. FAILURE MODE<br>b. CAUSE<br>c. FMN<br>d. DETECTION METHOD<br>e. CORRECTING ACTION<br>f. TIME TO EFFECT<br>g. TIMEFRAME | FAILURE EFFECT ON SYSTEM PERFORMANCE | FAILURE EFFECT ON VEHICLE SYSTEMS AND/OR PERSONNEL SAFETY | CRIT CAT |
|---|---|---|---|---|---|---|
| BP 700-P200A1 | BRIDGE PERMISSIVE RELAY (17AR5) | PREVENTS BRIDGE CONTROLS FROM DE-ENERGIZING, FOLLOWING AN OVERLOAD, UNTIL THE MASTER SWITCH IS RETURNED TO THE OFF POSITION. | a. FAILS DEACTIVATED (DE-ENERGIZED POSITION) | BRIDGE DRIVE WILL NOT RUN. BRAKES WILL (REMAIN) SET. | NO EFFECT. | 3 |
| | CONTACTS (15A27) | NORMALLY CLOSED CONTACTS OPEN TO DE-ENERGIZE RESET INPUT TO BFSA. | a. FAILS OPEN | RESET INPUT TO BFSA WILL NOT BE ENERGIZED. ALTERNATE BP CONTACT (17AE15) WILL SHUT DOWN BRIDGE AND SET BRAKES. | NO EFFECT. | 3 |
| | | | a. FAILS CLOSED | RESET INPUT TO BFSA WILL REMAIN ENERGIZED, DISABLING BMCM. BRIDGE WILL NOT RUN. | NO EFFECT. | 3 |
| | CONTACTS (17AH5) | HOLDS BP RELAY ENERGIZED WHEN BRIDGE MASTER SWITCH IS MOVED. | a. FAILS OPEN | BP WILL DE-ENERGIZE WHEN MASTER SWITCH IS MOVED TO SELECT BRIDGE DIRECTION AND SPEED. BRIDGE DRIVE WILL NOT RUN AND BRAKES WILL (REMAIN) SET. | NO EFFECT. | 3 |
| | | | a. FAILS CLOSED | BP WILL NOT RE-ENERGIZE AFTER AN OVERLOAD CLEARS UNTIL OVERLOAD SWITCH IS RESET MANUALLY. DOUBLE FAILURE REQUIRED. | NO EFFECT. | 3 |
| | CONTACTS (17AE15) | INTERRUPTS POWER TO BBR AND BDE RELAYS WHEN OVERLOAD OCCURS. | a. FAILS OPEN | BBR AND BDE WILL NOT ENERGIZE. BRIDGE WILL NOT RUN AND BRAKES WILL (REMAIN) SET. | NO EFFECT. | 3 |
| | | | a. FAILS CLOSED | POWER TO BBR AND BDE WILL NOT BE INTERRUPTED WHEN AN OVERLOAD OCCURS. INSTANTANEOUS OVERCURRENT CIRCUIT IN BMCM WILL DETECT OVERLOAD CONDITIONS AND SHUTDOWN BRIDGE. | NO EFFECT. | 3 |

Table 14 (Page 13 of 35). **ELECTRICAL FMEA - BRIDGE**

**System** 30-TON BRIDGE CRANE, OPF-3
**Subsystem** BRIDGE
**Drawing No.** EDERER EB-2286 **Sheet No.**
**PMN** H70-1379-01

**Program** SPACE SHUTTLE

**Station Set/Facility Code** GD
**Date** MARCH 1991
**Reference Figure Used** NA
**Prepared By** P. CLUKEY, LSOC 51-22

| FIND NO. PART NO. | PART NAME | PART FUNCTION | a. FAILURE MODE b. CAUSE c. FMN d. DETECTION METHOD e. CORRECTING ACTION f. TIME TO EFFECT g. TIMEFRAME | FAILURE EFFECT ON SYSTEM PERFORMANCE | FAILURE EFFECT ON VEHICLE SYSTEMS AND/OR PERSONNEL SAFETY | CRIT CAT |
|---|---|---|---|---|---|---|
| NONE DS3012N | BRIDGE MASTER SWITCH | | | | | |
| | THUMBSWITCH (17AH7) | SWITCH CLOSES TO ENERGIZE BD RELAY. | a. FAILS OPEN | BRIDGE DRIFT RELAY WILL NOT ENERGIZE. BRIDGE WILL STOP NORMALLY. | NO EFFECT. | 3 |
| | | | a. FAILS CLOSED | BRAKES WILL NOT SET. REGENERATIVE BRAKING FROM DRIVE WILL STOP BRIDGE. | NO EFFECT. | 3 |
| | OFF CONTACT (17AH7) | ENERGIZES BP RELAY WHEN MASTER SWITCH IS IN THE OFF POSITION | a. FAILS OPEN | BRIDGE DRIVE WILL NOT RUN. | NO EFFECT. | 3 |
| | | | a. FAILS CLOSED | BP WILL NOT RE-ENERGIZE AFTER AN OVERLOAD CLEARS UNTIL OVERLOAD SWITCH IS RESET MANUALLY. DOUBLE FAILURE REQUIRED. | NO EFFECT. | 3 |
| | SOUTH CONTACT (17AH8) | CLOSES TO ENERGIZE BS, BS1 AND DISABLE BN, BN1. | a. FAILS OPEN | BRIDGE WILL NOT DRIVE SOUTH WHEN SELECTED BY MASTER SWITCH. | NO EFFECT. | 3 |
| | | | a. FAILS CLOSED | SEE GROUND RULES. | NO EFFECT. | 3 |
| | NORTH CONTACT (17AH10) | CLOSES TO ENERGIZE BN, BN1 AND DISABLE BS, BS1. | a. FAILS OPEN | BRIDGE WILL NOT DRIVE NORTH WHEN SELECTED BY MASTER SWITCH. | NO EFFECT. | 3 |
| | | | a. FAILS CLOSED | SEE GROUND RULES. | NO EFFECT. | 3 |
| | POTENTIOMETER 5KΩ (17AJ11) | GENERATES VARIABLE VOLTAGE TO CONTROL PROPORTIONAL BRIDGE SPEED. | a. FAILS OPEN | LOSS OF CONTROL VOLTAGE TO BTIM. BRIDGE DRIVE WILL NOT RUN. | NO EFFECT. | 3 |
| | | | a. FAILS SHORT | SHORT/OVERLOAD MAY DAMAGE BPS. LOSS OF +15 VOLTS WILL PREVENT BRIDGE DRIVE FROM RUNNING. | NO EFFECT. | 3 |

Table 14 (Page 14 of 35). **ELECTRICAL FMEA - BRIDGE**

**System** 30-TON BRIDGE CRANE, OPF-3
**Subsystem** BRIDGE
**Drawing No.** EDERER EB-2286 **Sheet No.**
**PMN** H70-1379-01

**Program** SPACE SHUTTLE

**Station Set/Facility Code** GD
**Date** MARCH 1991
**Reference Figure Used** NA
**Prepared By** P. CLUKEY, LSOC 51-22

| FIND NO. PART NO. | PART NAME | PART FUNCTION | a. FAILURE MODE b. CAUSE c. FMN d. DETECTION METHOD e. CORRECTING ACTION f. TIME TO EFFECT g. TIMEFRAME | FAILURE EFFECT ON SYSTEM PERFORMANCE | FAILURE EFFECT ON VEHICLE SYSTEMS AND/OR PERSONNEL SAFETY | CRIT CAT |
|---|---|---|---|---|---|---|
| BD 700-P200A1 | BRIDGE DRIFT RELAY (17AS6) | ENERGIZE BBR RELAY TO RELEASE BRAKES. | a. FAILS DEACTIVATED (DE-ENERGIZED POSITION) | THUMBSWITCH ON MASTER SWITCH WILL NOT RELEASE BRAKES. | NO EFFECT. | 3 |
| | CONTACT (17AL17) | ENERGIZES BBR RELAY WHEN THUMBSWITCH IS DEPRESSED. | a. FAILS OPEN | THUMBSWITCH ON MASTER SWITCH WILL NOT RELEASE BRAKES. | NO EFFECT. | 3 |
| | | | a. FAILS CLOSED | BRAKES WILL BE RELEASED WHENEVER THE BRIDGE CONTROLS ARE POWERED UP. REGENERATIVE BRAKING WILL STOP BRIDGE WHEN MOTION OCCURS. | NO EFFECT. | 3 |
| | CONTACT (17AP17) | ISOLATES BDE RELAY WHEN PREVIOUS CONTACT ENERGIZES BBR RELAY. | a. FAILS OPEN | BRAKES WILL SET WITHOUT NORMAL DELAY WHEN MASTER SWITCH IS RETURNED TO THE OFF POSITION. EXCESSIVE BRAKE WEAR MAY OCCUR. | NO EFFECT. | 3 |
| | | | a. FAILS CLOSED | BDE RELAY WILL BE ENERGIZED WHEN BD ENERGIZES BBR. NO DIRECTION IS COMMANDED AND BRIDGE WILL NOT MOVE. | NO EFFECT. | 3 |
| BS1 8501-RS-24 | BRIDGE SOUTH 1 RELAY (17AS7) | ENERGIZES SOUTH INPUT LINE TO BTIM WHEN SOUTH DIRECTION SELECTED. | a. FAILS DEACTIVATED (DE-ENERGIZED POSITION) | BRIDGE DRIVE WILL NOT RUN SOUTH. | NO EFFECT. | 3 |
| | CONTACT (16M15) | CLOSES TO ENERGIZE SOUTH INPUT TO BTIM. | a. FAILS OPEN | BRIDGE DRIVE WILL NOT RUN SOUTH. | NO EFFECT. | 3 |
| | | | a. FAILS CLOSED | BEOS RELAY WILL TRIP MCB WHEN NORTH MOTION IS COMMANDED. CRANE WILL SHUT DOWN AND ALL BRAKES WILL SET. | NO EFFECT. | 3 |

Table 14 (Page 15 of 35). **ELECTRICAL FMEA - BRIDGE**

**System** 30-TON BRIDGE CRANE, OPF-3
**Subsystem** BRIDGE
**Drawing No.** EDERER EB-2286 **Sheet No.**
**PMN** H70-1379-01

**Program** SPACE SHUTTLE

**Station Set/Facility Code** GD
**Date** MARCH 1991
**Reference Figure Used** NA
**Prepared By** P. CLUKEY, LSOC 51-22

| FIND NO. PART NO. | PART NAME | PART FUNCTION | a. FAILURE MODE b. CAUSE c. FMN d. DETECTION METHOD e. CORRECTING ACTION f. TIME TO EFFECT g. TIMEFRAME | FAILURE EFFECT ON SYSTEM PERFORMANCE | FAILURE EFFECT ON VEHICLE SYSTEMS AND/OR PERSONNEL SAFETY | CRIT CAT |
|---|---|---|---|---|---|---|
| BS 700-P600A1 | BRIDGE SOUTH RELAY (17AS8) | ENERGIZES WHEN SOUTH DIRECTION IS SELECTED BY MASTER SWITCH. | a. FAILS DEACTIVATED (DE-ENERGIZED POSITION) | BRIDGE DRIVE WILL NOT RUN SOUTH. | NO EFFECT. | 3 |
| | CONTACT (17H26) | BYPASSES SLOW NORTH LIMIT SWITCH. | a. FAILS OPEN | BRIDGE WILL NOT RUN SOUTH IN HIGH SPEED RANGE UNLESS SLOW NORTH LIMIT IS CLOSED. | NO EFFECT. | 3 |
| | | | a. FAILS CLOSED | BRIDGE MAY RUN NORTH IN HIGH SPEED RANGE UNTIL NORTH FINAL LIMIT SWITCH PREVENTS FURTHER NORTH TRAVEL. OPERATOR CAN STOP BRIDGE BY CENTERING MASTER SWITCH, PRESSING STOP OR E-STOP. | NO EFFECT. | 3 |
| | CONTACT (17H28) | BYPASSES FINAL NORTH LIMIT SWITCH. | a. FAILS OPEN | BRIDGE WILL NOT DRIVE SOUTH ONCE THE FINAL NORTH LIMIT SWITCH IS TRIPPED. | NO EFFECT. | 3 |
| | | | a. FAILS CLOSED | BRIDGE NORTH TRAVEL MAY CONTINUE IN SLOW SPEED UNTIL NORTH CRANE STOPS PREVENT FURTHER NORTH BRIDGE TRAVEL. OPERATOR CAN STOP BRIDGE MOTION BY CENTERING MASTER SWITCH, PRESSING STOP OR E-STOP. | NO EFFECT. | 3 |
| | CONTACT (17AP9) | ENERGIZES BCMD WHEN SOUTH BRIDGE TRAVEL IS SELECTED WITH MASTER SWITCH. | a. FAILS OPEN | BRIDGE WILL NOT RUN IN SOUTH DIRECTION. | NO EFFECT. | 3 |
| | | | a. FAILS CLOSED | WHEN NORTH IS COMMANDED, BN CONTACT (17AQ8) WILL DISABLE BS AND BS1 RELAYS. | NO EFFECT. | 3 |

Table 14 (Page 16 of 35). **ELECTRICAL FMEA - BRIDGE**

**System** 30-TON BRIDGE CRANE, OPF-3
**Subsystem** BRIDGE
**Drawing No.** EDERER EB-2286 **Sheet No.**
**PMN** H70-1379-01

**Program** SPACE SHUTTLE

**Station Set/Facility Code** GD
**Date** MARCH 1991
**Reference Figure Used** NA
**Prepared By** P. CLUKEY, LSOC 51-22

| FIND NO. PART NO. | PART NAME | PART FUNCTION | a. FAILURE MODE<br>b. CAUSE<br>c. FMN<br>d. DETECTION METHOD<br>e. CORRECTING ACTION<br>f. TIME TO EFFECT<br>g. TIMEFRAME | FAILURE EFFECT ON SYSTEM PERFORMANCE | FAILURE EFFECT ON VEHICLE SYSTEMS AND/OR PERSONNEL SAFETY | CRIT CAT |
|---|---|---|---|---|---|---|
| | CONTACT (17AQ10) | DISABLES BN, BN1 WHEN SOUTH DIRECTION IS SELECTED WITH MASTER SWITCH. | a. FAILS OPEN | BRIDGE WILL NOT RUN IN NORTH DIRECTION. | NO EFFECT. | 3 |
| | | | a. FAILS CLOSED | BN AND BN1 WILL NOT ENERGIZE UNTIL NORTH IS SELECTED WITH MASTER SWITCH. | NO EFFECT. | 3 |
| BCMD 700-PT400A1 | BRIDGE COMMAND RELAY (17AS9) | ENERGIZES WHEN A DIRECTION IS COMMANDED BY THE MASTER SWITCH. | a. FAILS DEACTIVATED (DE-ENERGIZED POSITION) | BRIDGE WILL NOT RUN IN EITHER DIRECTION. | NO EFFECT. | 3 |
| | CONTACT (17AR14) | ENERGIZES BCMD1 WHEN DIRECTION IS COMMANDED BY THE MASTER SWITCH. | a. FAILS OPEN | BRIDGE MOTOR FIELDS WILL REMAIN ECONOMIZED. BRIDGE MAY NOT RUN OR REQUIRE HIGHER THAN NORMAL ARMATURE CURRENT. | NO EFFECT. | 3 |
| | | | a. FAILS CLOSED | BRIDGE MOTOR FIELDS WILL NOT ECONOMIZE. OVERTEMP WARNING AND SHUTDOWN WILL PREVENT DAMAGE TO MOTORS. | NO EFFECT. | 3 |
| | CONTACT (17AL16) | ENERGIZE BR BEFORE DIRECTION IS COMMANDED BY THE MASTER SWITCH. | a. FAILS OPEN | BR WILL NOT ENERGIZE. BRIDGE WILL NOT RUN. | NO EFFECT. | 3 |
| | | | a. FAILS CLOSED | BR WILL REMAIN ENERGIZED UNTIL BEOH, BWOH, OR BRDY TRIPS OFF. | NO EFFECT. | 3 |
| | CONTACT (17AL17) | ENERGIZES BBR RELAY. | a. FAILS OPEN | BRAKES WILL NOT RELEASE. BRIDGE WILL NOT MOVE. | NO EFFECT. | 3 |
| | | | a. FAILS CLOSED | BBR WILL BE ENERGIZED, RELEASING BRAKES. REGENERATIVE DRIVE WILL STOP BRIDGE MOTION WHEN COMMANDED. | NO EFFECT. | 3 |

Table 14 (Page 17 of 35). **ELECTRICAL FMEA - BRIDGE**

**System** 30-TON BRIDGE CRANE, OPF-3
**Subsystem** BRIDGE
**Drawing No.** EDERER EB-2286 **Sheet No.**
**PMN** H70-1379-01

**Program** SPACE SHUTTLE

**Station Set/Facility Code** GD
**Date** MARCH 1991
**Reference Figure Used** NA
**Prepared By** P. CLUKEY, LSOC 51-22

| FIND NO. PART NO. | PART NAME | PART FUNCTION | a. FAILURE MODE<br>b. CAUSE<br>c. FMN<br>d. DETECTION METHOD<br>e. CORRECTING ACTION<br>f. TIME TO EFFECT<br>g. TIMEFRAME | FAILURE EFFECT ON SYSTEM PERFORMANCE | FAILURE EFFECT ON VEHICLE SYSTEMS AND/OR PERSONNEL SAFETY | CRIT CAT |
|---|---|---|---|---|---|---|
| | CONTACT (17AL18) | ENERGIZES BDE RELAY AND DELAYS THE BRAKE SETTING FOR 2.5 SECONDS. | a. FAILS OPEN | BDE WILL NOT ENERGIZE AND BRIDGE WILL NOT RUN. | NO EFFECT. | 3 |
| | | | a. FAILS CLOSED | BDE WILL REMAIN ENERGIZED WHEN MASTER SWITCH IS RETURNED TO OFF POSITION. BRAKES WILL SET WHEN NEAR ZERO SPEED IS DETECTED. | NO EFFECT. | 3 |
| BN 700-P600A1 | BRIDGE NORTH RELAY (17AS10) | ENERGIZES WHEN NORTH DIRECTION IS SELECTED BY MASTER SWITCH. | a. FAILS DEACTIVATED (DE-ENERGIZED POSITION) | BRIDGE DRIVE WILL NOT RUN NORTH. | NO EFFECT. | 3 |
| | CONTACT (17M26) | BYPASSES SLOW SOUTH LIMIT SWITCH. | a. FAILS OPEN | BRIDGE WILL NOT RUN NORTH IN HIGH SPEED RANGE UNLESS SLOW SOUTH LIMIT SWITCH IS CLOSED. | NO EFFECT. | 3 |
| | | | a. FAILS CLOSED | BRIDGE MAY RUN SOUTH IN HIGH SPEED RANGE UNTIL SOUTH FINAL LIMIT SWITCH PREVENTS FURTHER SOUTH TRAVEL. OPERATOR CAN STOP BRIDGE MOTION BY CENTERING MASTER SWITCH, PRESSING STOP OR E-STOP. | NO EFFECT. | 3 |
| | CONTACT (17M28) | BYPASSES FINAL SOUTH LIMIT SWITCH. | a. FAILS OPEN | BRIDGE WILL NOT DRIVE NORTH ONCE SOUTH FINAL LIMIT SWITCH IS TRIPPED. | NO EFFECT. | 3 |
| | | | a. FAILS CLOSED | BRIDGE SOUTH TRAVEL MAY CONTINUE IN SLOW SPEED UNTIL SOUTH CRANE STOPS PREVENT FURTHER SOUTH BRIDGE TRAVEL. OPERATOR CAN STOP BRIDGE MOTION BY CENTERING MASTER SWITCH, PRESSING STOP OR E-STOP. | NO EFFECT. | 3 |

Table 14 (Page 18 of 35). **ELECTRICAL FMEA - BRIDGE**

**System** 30-TON BRIDGE CRANE, OPF-3
**Subsystem** BRIDGE
**Drawing No.** EDERER EB-2286 **Sheet No.**
**PMN** H70-1379-01

**Program** SPACE SHUTTLE

**Station Set/Facility Code** GD
**Date** MARCH 1991
**Reference Figure Used** NA
**Prepared By** P. CLUKEY, LSOC 51-22

| FIND NO. PART NO. | PART NAME | PART FUNCTION | a. FAILURE MODE b. CAUSE c. FMN d. DETECTION METHOD e. CORRECTING ACTION f. TIME TO EFFECT g. TIMEFRAME | FAILURE EFFECT ON SYSTEM PERFORMANCE | FAILURE EFFECT ON VEHICLE SYSTEMS AND/OR PERSONNEL SAFETY | CRIT CAT |
|---|---|---|---|---|---|---|
| | CONTACT (17AQ8) | DISABLES BS AND BS1 WHEN NORTH DIRECTION IS SELECTED WITH MASTER SWITCH. | a. FAILS OPEN | BRIDGE WILL NOT RUN IN SOUTH DIRECTION. | NO EFFECT. | 3 |
| | | | a. FAILS CLOSED | BS AND BS1 WILL NOT BE ENERGIZED UNTIL SOUTH IS SELECTED WITH MASTER SWITCH. | NO EFFECT. | 3 |
| | CONTACT (17AP9) | ENERGIZES BCMD WHEN NORTH BRIDGE TRAVEL IS SELECTED WITH MASTER SWITCH. | a. FAILS OPEN | BRIDGE WILL NOT RUN IN NORTH DIRECTION. | NO EFFECT. | 3 |
| | | | a. FAILS CLOSED | WHEN SOUTH IS COMMANDED, BS CONTACT (17AQ10) WILL DISABLE BN AND BN1 RELAYS. | NO EFFECT. | 3 |
| BN1 8501-RS-24 | BRIDGE NORTH 1 RELAY (17AS11) | ENERGIZES WHEN NORTH DIRECTION IS SELECTED. | a. FAILS DEACTIVATED (DE-ENERGIZED POSITION) | BRIDGE DRIVE WILL NOT RUN NORTH. | NO EFFECT. | 3 |
| | CONTACT (16N15) | ENERGIZES NORTH INPUT TO BTIM. | a. FAILS OPEN | BRIDGE DRIVE WILL NOT RUN NORTH. | NO EFFECT. | 3 |
| | | | a. FAILS CLOSED | BEOS RELAY WILL TRIP MCB WHEN SOUTH MOTION IS COMMANDED. CRANE WILL SHUT DOWN AND ALL BRAKES WILL SET. | NO EFFECT. | 3 |
| BCMD1 8501-RS-24 | BRIDGE COMMAND 1 RELAY (17AS14) | ENERGIZES WHEN BCMD IS ENERGIZED. | a. FAILS DEACTIVATED (DE-ENERGIZED POSITION) | BRIDGE MOTOR FIELDS WILL REMAIN IN ECONOMIZE MODE. BRIDGE WILL NOT RUN OR REQUIRE HIGHER THAN NORMAL ARMATURE CURRENTS. | NO EFFECT. | 3 |
| | CONTACT (16M16) | ENERGIZES RUN ENABLE INPUT TO BTIM. | a. FAILS OPEN | BRIDGE MOTOR FIELDS WILL REMAIN IN ECONOMIZE MODE. BRIDGE WILL NOT RUN OR REQUIRE HIGHER THAN NORMAL ARMATURE CURRENTS. | NO EFFECT. | 3 |

Table 14 (Page 19 of 35). **ELECTRICAL FMEA - BRIDGE**

**System** 30-TON BRIDGE CRANE, OPF-3
**Subsystem** BRIDGE
**Drawing No.** EDERER EB-2286 **Sheet No.**
**PMN** H70-1379-01

**Program** SPACE SHUTTLE

**Station Set/Facility Code** GD
**Date** MARCH 1991
**Reference Figure Used** NA
**Prepared By** P. CLUKEY, LSOC 51-22

| FIND NO. PART NO. | PART NAME | PART FUNCTION | a. FAILURE MODE b. CAUSE c. FMN d. DETECTION METHOD e. CORRECTING ACTION f. TIME TO EFFECT g. TIMEFRAME | FAILURE EFFECT ON SYSTEM PERFORMANCE | FAILURE EFFECT ON VEHICLE SYSTEMS AND/OR PERSONNEL SAFETY | CRIT CAT |
|---|---|---|---|---|---|---|
| | | | a. FAILS CLOSED | BRIDGE MOTOR FIELDS WILL NOT ECONOMIZE. OVERTEMP WARNING AND SHUTDOWN WILL PREVENT DAMAGE TO MOTORS. | NO EFFECT. | 3 |
| BR 700-P200A1 | BRIDGE RUN RELAY (17AS15) | DE-ENERGIZES WHEN BFSA SENSES A FAULT OR FOR OVERHEAT SHUTDOWN. | a. FAILS DEACTIVATED (DE-ENERGIZED POSITION) | BC WILL NOT BE ENERGIZED AND BRIDGE WILL NOT RUN. | NO EFFECT. | 3 |
| | CONTACT (15H24) | CLOSES TO ALLOW BFSA TO ENABLE BMCM. | a. FAILS OPEN | BRIDGE DRIVE WILL NOT RUN. | NO EFFECT. | 3 |
| | | | a. FAILS CLOSED | BDE RELAY WILL PREVENT BMCM FROM BEING ENABLED. | NO EFFECT. | 3 |
| | CONTACT (17AF19) | ENERGIZES BC RELAY. | a. FAILS OPEN | BC WILL NOT BE ENERGIZED AND BRIDGE WILL NOT RUN. | NO EFFECT. | 3 |
| | | | a. FAILS CLOSED | BC WILL REMAIN ENERGIZED. OTHER BR CONTACT WILL DISABLE BMCM IF FAULT OCCURS. | NO EFFECT. | 3 |
| | CONTACT (17AL15) | ENERGIZES BR RELAY WHEN BCMD CONTACT (17M16) OPENS. | a. FAILS OPEN | BR WILL DE-ENERGIZE WHEN BCMD CONTACT OPENS. BRIDGE CONTROLS WILL DISABLE BMCM AND SET BRAKES. | NO EFFECT. | 3 |
| | | | a. FAILS CLOSED | BR RELAY WILL ENERGIZE WHEN MASTER SWITCH IS NOT OFF. WOULD REQUIRE PREVIOUS FAILURE IN BRIDGE CONTROL CIRCUITRY. | NO EFFECT. | 3 |
| BBR 700-P200A1 | BRIDGE BRAKE RELAY (17AS17) | ENERGIZES WHEN A DIRECTION IS COMMANDED OR BRIDGE DRIFT IS COMMANDED. | a. FAILS DEACTIVATED (DE-ENERGIZED POSITION) | BRAKES WILL REMAIN SET, BRIDGE WILL NOT MOVE. | NO EFFECT. | 3 |
| | CONTACT (15G2) | ENERGIZES BRECT TO RELEASE BRAKES. | a. FAILS OPEN | BRAKES WILL REMAIN SET, BRIDGE WILL NOT MOVE. | NO EFFECT. | 3 |

Table 14 (Page 20 of 35). **ELECTRICAL FMEA - BRIDGE**

**System** 30-TON BRIDGE CRANE, OPF-3
**Subsystem** BRIDGE
**Drawing No.** EDERER EB-2286 **Sheet No.**
**PMN** H70-1379-01

**Program** SPACE SHUTTLE

**Station Set/Facility Code** GD
**Date** MARCH 1991
**Reference Figure Used** NA
**Prepared By** P. CLUKEY, LSOC 51-22

| FIND NO. PART NO. | PART NAME | PART FUNCTION | a. FAILURE MODE b. CAUSE c. FMN d. DETECTION METHOD e. CORRECTING ACTION f. TIME TO EFFECT g. TIMEFRAME | FAILURE EFFECT ON SYSTEM PERFORMANCE | FAILURE EFFECT ON VEHICLE SYSTEMS AND/OR PERSONNEL SAFETY | CRIT CAT |
|---|---|---|---|---|---|---|
| | | | a. FAILS CLOSED | OTHER BBR CONTACT WILL DE-ENERGIZE BRECT. | NO EFFECT. | 3 |
| | CONTACT (15J2) | ENERGIZES BRECT TO RELEASE BRAKES. | a. FAILS OPEN | BRAKES WILL REMAIN SET, BRIDGE WILL NOT MOVE. | NO EFFECT. | 3 |
| | | | a. FAILS CLOSED | OTHER BBR CONTACT WILL DE-ENERGIZE BRECT. | NO EFFECT. | 3 |
| BDE 700-P200A1 | BRIDGE DRIVE ENABLE RELAY (17AS18) | ENERGIZES WHEN A DIRECTION IS COMMANDED WITH THE MASTER SWITCH. | a. FAILS DEACTIVATED (DE-ENERGIZED POSITION) | BFSA WILL NOT ENABLE BMCM AND BRIDGE WILL NOT RUN. | NO EFFECT. | 3 |
| | CONTACT (15J24) | ALLOWS BFSA TO ENABLE BMCM. | a. FAILS OPEN | BRIDGE DRIVE WILL NOT RUN. | NO EFFECT. | 3 |
| | | | a. FAILS CLOSED | BR CONTACT WILL PREVENT BMCM FROM BEING ENERGIZED. | NO EFFECT. | 3 |
| BC 302AM2OP | BRIDGE LOOP CONTACTOR (17AS19) | ENERGIZES WHEN NO FAULTS ARE DETECTED. | a. FAILS DEACTIVATED (DE-ENERGIZED POSITION) | BRIDGE DRIVE WILL NOT RUN. | NO EFFECT. | 3 |
| | CONTACT (15Q11) | ALLOWS POWER TO BRIDGE MOTORS. | a. FAILS OPEN | MOTORS WILL NOT RUN, BRIDGE WILL NOT MOVE. | NO EFFECT. | 3 |
| | | | a. FAILS CLOSED | OTHER BC CONTACT (15Q14) WILL BREAK CIRCUIT. | NO EFFECT. | 3 |
| | CONTACT (15Q14) | ALLOWS POWER TO BRIDGE MOTORS. | a. FAILS OPEN | MOTORS WILL NOT RUN, BRIDGE WILL NOT MOVE. | NO EFFECT. | 3 |
| | | | a. FAILS CLOSED | OTHER BC CONTACT (15Q11) WILL BREAK CIRCUIT. | NO EFFECT. | 3 |

Table 14 (Page 21 of 35). **ELECTRICAL FMEA - BRIDGE**

**System** 30-TON BRIDGE CRANE, OPF-3
**Subsystem** BRIDGE
**Drawing No.** EDERER EB-2286 **Sheet No.**
**PMN** H70-1379-01

**Program** SPACE SHUTTLE

**Station Set/Facility Code** GD
**Date** MARCH 1991
**Reference Figure Used** NA
**Prepared By** P. CLUKEY, LSOC 51-22

| FIND NO. PART NO. | PART NAME | PART FUNCTION | a. FAILURE MODE<br>b. CAUSE<br>c. FMN<br>d. DETECTION METHOD<br>e. CORRECTING ACTION<br>f. TIME TO EFFECT<br>g. TIMEFRAME | FAILURE EFFECT ON SYSTEM PERFORMANCE | FAILURE EFFECT ON VEHICLE SYSTEMS AND/OR PERSONNEL SAFETY | CRIT CAT |
|---|---|---|---|---|---|---|
| | CONTACT (15H25) | ENERGIZES INPUT LINE TO BFSA ALLOWING ENABLE OUTPUT TO REACH BMCM. | a. FAILS OPEN | ENABLE SIGNAL WILL NOT REACH BMCM. BRIDGE DRIVE WILL NOT RUN. | NO EFFECT. | 3 |
| | | | a. FAILS CLOSED | BDE WILL DISABLE BMCM WHEN MOVEMENT IS NOT COMMANDED. | NO EFFECT. | 3 |
| | CONTACT (17AH17) | ENERGIZES BBR AND BDE RELAYS. | a. FAILS OPEN | BCMD CAN NOT ENERGIZE BBR AND BDE. BRIDGE WILL NOT RUN. | NO EFFECT. | 3 |
| | | | a. FAILS CLOSED | BCMD WILL DE-ENERGIZE BBR AND BDE RELAYS. | NO EFFECT. | 3 |
| BPS DB15-20 | BRIDGE POWER SUPPLY (16C8) | SUPPLY +/-15 VOLTS DC TO BTIM AND MASTER SWITCH. | a. LOW OR NO OUTPUT | BEOS RELAY WILL DE-ENERGIZE CAUSING MCB TO TRIP. CRANE WILL SHUT DOWN. | NO EFFECT. | 3 |
| | | | a. HIGH OUTPUT | SPEED IN RANGE SELECTED MAY BE UP TO 20% FASTER THAN NORMAL OR FAILURE OF COMPONENTS IN BTIM FROM EXCESSIVE VOLTAGE WILL SHUT DOWN BRIDGE DRIVE. BRIDGE WILL STOP BY CENTERING MASTER SWITCH, PRESSING STOP OR E-STOP. | NO EFFECT. | 3 |
| NONE NONE | CAPACITOR (16L10) | ATTENUATE AC RIPPLE ON +15 VOLT POWER SUPPLY. | a. FAILS OPEN | BTIM CIRCUITRY WILL ATTENUATE AC RIPPLE. | NO EFFECT. | 3 |
| | | | a. FAILS SHORT | LOSS OF +15 VOLTS WILL CAUSE BEOS RELAY TO DROP OUT, TRIPPING MCB. CRANE WILL SHUT DOWN AND ALL BRAKES WILL SET. | NO EFFECT. | 3 |
| NONE NONE | CAPACITOR (16N10) | ATTENUATE AC RIPPLE ON -15 VOLT POWER SUPPLY. | a. FAILS OPEN | BT1 CIRCUITRY WILL ATTENUATE AC RIPPLE. | NO EFFECT. | 3 |

Table 14 (Page 22 of 35). **ELECTRICAL FMEA - BRIDGE**

**System** 30-TON BRIDGE CRANE, OPF-3
**Subsystem** BRIDGE
**Drawing No.** EDERER EB-2286 **Sheet No.**
**PMN** H70-1379-01

**Program** SPACE SHUTTLE

**Station Set/Facility Code** GD
**Date** MARCH 1991
**Reference Figure Used** NA
**Prepared By** P. CLUKEY, LSOC 51-22

| FIND NO. PART NO. | PART NAME | PART FUNCTION | a. FAILURE MODE b. CAUSE c. FMN d. DETECTION METHOD e. CORRECTING ACTION f. TIME TO EFFECT g. TIMEFRAME | FAILURE EFFECT ON SYSTEM PERFORMANCE | FAILURE EFFECT ON VEHICLE SYSTEMS AND/OR PERSONNEL SAFETY | CRIT CAT |
|---|---|---|---|---|---|---|
| | | | a. FAILS SHORT | LOSS OF -15 VOLTS WILL CAUSE BEOS RELAY TO DROP OUT, TRIPPING MCB. CRANE WILL SHUT DOWN AND ALL BRAKES WILL SET. | NO EFFECT. | 3 |
| BEOS KRPA11-DG24 | BRIDGE ELECTRONIC OVERSPEED RELAY (16N17) | ENERGIZED BY BTIM WHEN OVERSPEED CONDITION DOES NOT EXIST. | a. FAILS DEACTIVATED (DE-ENERGIZED POSITION) | BOSR RELAY WILL NOT BE ENERGIZED WHICH WILL TRIP THE MCB. | NO EFFECT. | 3 |
| | CONTACT (1709) | ENERGIZES BOSR RELAY. | a. FAILS OPEN | BOSR RELAY WILL NOT BE ENERGIZED WHICH WILL TRIP THE MCB. | NO EFFECT. | 3 |
| | | | a. FAILS CLOSED | BRIDGE OVERSPEED CONDITION WILL NOT SHUT DOWN CRANE. REQUIRES PREVIOUS FAILURE IN BRIDGE MOTOR CONTROL CIRCUIT. | NO EFFECT. | 3 |
| BZS KRPA11-DG24 | BRIDGE ZERO SPEED RELAY (16M17) | ENERGIZES WHEN BRIDGE APPROACHES ZERO SPEED. | a. FAILS DEACTIVATED (DE-ENERGIZED POSITION) | BRAKES WILL NOT SET UNTIL BCMD DELAY TIMES OUT, 2.5 SECONDS AFTER STOP IS COMMANDED. | NO EFFECT. | 3 |
| | CONTACT (17A017) | ENERGIZE BBR WHILE BCMD CONTACT TIMES OUT. | a. FAILS OPEN | BBR WILL DE-ENERGIZE WHEN STOP IS COMMANDED, SETTING THE BRAKES BEFORE BRIDGE SLOWS. EXCESSIVE BRAKE WEAR MAY OCCUR. | NO EFFECT. | 3 |
| | | | a. FAILS CLOSED | BRAKES WILL NOT SET UNTIL BCMD DELAY TIMES OUT, 2.5 SECONDS AFTER STOP IS COMMANDED. | NO EFFECT. | 3 |
| NONE AN-DC50 | BRIDGE TACHOMETER (16F30) | GENERATES VOLTAGE PROPORTIONAL TO SPEED OF BRIDGE MOTOR. | | | | |

Table 14 (Page 23 of 35). **ELECTRICAL FMEA - BRIDGE**

**System** 30-TON BRIDGE CRANE, OPF-3
**Subsystem** BRIDGE
**Drawing No.** EDERER EB-2286 **Sheet No.**
**PMN** H70-1379-01

**Program** SPACE SHUTTLE

**Station Set/Facility Code** GD
**Date** MARCH 1991
**Reference Figure Used** NA
**Prepared By** P. CLUKEY, LSOC 51-22

| FIND NO. PART NO. | PART NAME | PART FUNCTION | a. FAILURE MODE<br>b. CAUSE<br>c. FMN<br>d. DETECTION METHOD<br>e. CORRECTING ACTION<br>f. TIME TO EFFECT<br>g. TIMEFRAME | FAILURE EFFECT ON SYSTEM PERFORMANCE | FAILURE EFFECT ON VEHICLE SYSTEMS AND/OR PERSONNEL SAFETY | CRIT CAT |
|---|---|---|---|---|---|---|
| | | (CRANE 1) | a. LOW OR NO OUTPUT<br>b. OPEN/SHORTED WINDINGS<br>c. 09FY091-007.011<br>d. VISUAL<br>e. NONE<br>f. LESS THAN 1 SECOND<br>g. NA | BRIDGE MOTOR CONTROLLER WILL COMPENSATE FOR THE LOSS OF TACHOMETER FEEDBACK BY INCREASING ARMATURE CURRENT. BRIDGE DRIVE WILL REACH 60-80% OF FULL SPEED BEFORE MOTOR CONTROLLER DETECTS ARMATURE OVERVOLTAGE AND SHUTS DOWN BRIDGE DRIVE. | POSSIBLE DAMAGE TO FLIGHT HARDWARE. CLOSE PROXIMITY TO AN OBSTRUCTION MAY NOT ALLOW SUFFICIENT TIME FOR THE MOTOR CONTROLLER TO DETECT PROBLEM AND SHUTDOWN BRIDGE DRIVE OR FOR THE OPERATOR TO USE E-STOP. | 2 |
| | | | a. HIGH OUTPUT | BRIDGE MAY RUN SLOWER THAN COMMANDED. | NO EFFECT. | 3 |
| | | (CRANE 2) | a. LOW OR NO OUTPUT | SPEED CLIPPING MODULE WILL DETECT DIFFERENCE BETWEEN TACHOMETER FEEDBACK VOLTAGE AND MOTOR ARMATURE VOLTAGE. OVERSPEED RELAY WILL DROP OUT, SHUTTING DOWN CRANE AND SETTING ALL BRAKES. | NO EFFECT. | 3 |
| | | | a. HIGH OUTPUT | BRIDGE MAY RUN SLOWER THAN COMMANDED OR SPEED CLIPPING MODULE WILL DETECT DIFFERENCE BETWEEN TACHOMETER FEEDBACK VOLTAGE AND MOTOR ARMATURE VOLTAGE. OVERSPEED RELAY WILL DROP OUT, SHUTTING DOWN CRANE AND SETTING ALL BRAKES. | NO EFFECT. | 3 |
| NONE<br>RN55C | RESISTOR<br>90.9KΩ<br>(16F27) | SCALES DOWN TACHOMETER VOLTAGE FOR BTIM. | | | | |

Table 14 (Page 24 of 35). **ELECTRICAL FMEA - BRIDGE**

**System** 30-TON BRIDGE CRANE, OPF-3
**Subsystem** BRIDGE
**Drawing No.** EDERER EB-2286 **Sheet No.**
**PMN** H70-1379-01

**Program** SPACE SHUTTLE

**Station Set/Facility Code** GD
**Date** MARCH 1991
**Reference Figure Used** NA
**Prepared By** P. CLUKEY, LSOC 51-22

| FIND NO. PART NO. | PART NAME | PART FUNCTION | a. FAILURE MODE<br>b. CAUSE<br>c. FMN<br>d. DETECTION METHOD<br>e. CORRECTING ACTION<br>f. TIME TO EFFECT<br>g. TIMEFRAME | FAILURE EFFECT ON SYSTEM PERFORMANCE | FAILURE EFFECT ON VEHICLE SYSTEMS AND/OR PERSONNEL SAFETY | CRIT CAT |
|---|---|---|---|---|---|---|
| | | (CRANE 1) | a. FAILS OPEN<br>b. CORROSION, FATIGUE<br>c. 09FY091-007.012<br>d. VISUAL<br>e. NONE<br>f. LESS THAN 1 SECOND<br>g. NA | BRIDGE MOTOR CONTROLLER WILL COMPENSATE FOR THE LOSS OF TACHOMETER FEEDBACK BY INCREASING ARMATURE CURRENT. BRIDGE DRIVE WILL REACH 60-80% OF FULL SPEED BEFORE MOTOR CONTROLLER DETECTS ARMATURE OVERVOLTAGE AND SHUTS DOWN BRIDGE DRIVE. | POSSIBLE DAMAGE TO FLIGHT HARDWARE. CLOSE PROXIMITY TO AN OBSTRUCTION MAY NOT ALLOW SUFFICIENT TIME FOR THE MOTOR CONTROLLER TO DETECT PROBLEM AND SHUTDOWN BRIDGE DRIVE OR FOR THE OPERATOR TO USE E-STOP. | 2 |
| | | (CRANE 2) | a. FAILS OPEN | SPEED CLIPPING MODULE WILL DETECT DIFFERENCE BETWEEN TACHOMETER FEEDBACK VOLTAGE AND MOTOR ARMATURE VOLTAGE. OVERSPEED RELAY WILL DROP OUT, SHUTTING DOWN CRANE AND SETTING ALL BRAKES. | NO EFFECT. | 3 |
| NONE<br>RN55C | RESISTOR<br>30.1KΩ<br>(16F24) | SCALES DOWN TACHOMETER VOLTAGE FOR BTIM. | a. FAILS OPEN | BRIDGE WILL RUN 75% SLOWER THAN COMMANDED. | NO EFFECT. | 3 |
| BTIM<br>EC-1890 | BRIDGE TRAVEL INTERFACE MODULE<br>(16W9) | PROVIDE SPEED, TACH, AND FIELD COMMANDS TO BMCM. MONITOR TACH FOR OVERSPEED AND ZERO SPEED CONDITIONS. | | | | |
| | J1-3<br>+ SPEED REFERENCE | PROVIDES SPEED COMMAND TO BMCM. | a. NO OUTPUT | BMCM WILL RECEIVE NO SPEED COMMAND. BRIDGE WILL NOT RUN. | NO EFFECT. | 3 |
| | | | a. LOW OUTPUT | BRIDGE WILL RUN SLOWER THAN COMMANDED. | NO EFFECT. | 3 |

Table 14 (Page 25 of 35). **ELECTRICAL FMEA - BRIDGE**

**System** 30-TON BRIDGE CRANE, OPF-3
**Subsystem** BRIDGE
**Drawing No.** EDERER EB-2286 **Sheet No.**
**PMN** H70-1379-01

**Program** SPACE SHUTTLE

**Station Set/Facility Code** GD
**Date** MARCH 1991
**Reference Figure Used** NA
**Prepared By** P. CLUKEY, LSOC 51-22

| FIND NO. PART NO. | PART NAME | PART FUNCTION | a. FAILURE MODE<br>b. CAUSE<br>c. FMN<br>d. DETECTION METHOD<br>e. CORRECTING ACTION<br>f. TIME TO EFFECT<br>g. TIMEFRAME | FAILURE EFFECT ON SYSTEM PERFORMANCE | FAILURE EFFECT ON VEHICLE SYSTEMS AND/OR PERSONNEL SAFETY | CRIT CAT |
|---|---|---|---|---|---|---|
| | J1-6 CONTROL - LER TACH | PROVIDES TACHOMETER FEEDBACK TO BMCM FROM BRIDGE TACHOMETER. | a. HIGH OUTPUT | BRIDGE DRIVE WILL NOT DECELERATE UNTIL MASTER SWITCH REACHES NEUTRAL (OFF) POSITION. BRAKES WILL SET AFTER 2.5 SECONDS OR WHEN NEAR ZERO SPEED IS DETECTED, WHICHEVER OCCURS FIRST. SLOW SPEED IN CLOSE PROXIMITY TO AN OBSTRUCTION WILL ALLOW TIME FOR BRIDGE TO STOP. | NO EFFECT. | 3 |
| | | (CRANE 1) | a. LOW OR NO OUTPUT<br>b. FAILED CIRCUIT COMPONENT<br>c. 09FY091-007.013<br>d. VISUAL<br>e. NONE<br>f. LESS THAN 1 SECOND<br>g. NA | BRIDGE MOTOR CONTROLLER WILL COMPENSATE FOR THE LOSS OF TACHOMETER FEEDBACK BY INCREASING ARMATURE CURRENT. BRIDGE DRIVE WILL REACH 60-80% OF FULL SPEED BEFORE MOTOR CONTROLLER DETECTS ARMATURE OVERVOLTAGE AND SHUTS DOWN BRIDGE DRIVE. | POSSIBLE DAMAGE TO FLIGHT HARDWARE. CLOSE PROXIMITY TO AN OBSTRUCTION MAY NOT ALLOW SUFFICIENT TIME FOR THE MOTOR CONTROLLER TO DETECT PROBLEM AND SHUTDOWN BRIDGE DRIVE OR FOR THE OPERATOR TO USE E-STOP. | 2 |
| | | | a. HIGH OUTPUT | BRIDGE MAY RUN SLOWER THAN COMMANDED. | NO EFFECT. | 3 |
| | | (CRANE 2) | a. LOW OR NO OUTPUT | SPEED CLIPPING MODULE WILL DETECT DIFFERENCE BETWEEN TACHOMETER FEEDBACK VOLTAGE AND MOTOR ARMATURE VOLTAGE. OVERSPEED RELAY WILL DROP OUT, SHUTTING DOWN CRANE AND SETTING ALL BRAKES. | NO EFFECT. | 3 |

Table 14 (Page 26 of 35). **ELECTRICAL FMEA - BRIDGE**

**System** 30-TON BRIDGE CRANE, OPF-3
**Subsystem** BRIDGE
**Drawing No.** EDERER EB-2286 **Sheet No.**
**PMN** H70-1379-01

**Program** SPACE SHUTTLE

**Station Set/Facility Code** GD
**Date** MARCH 1991
**Reference Figure Used** NA
**Prepared By** P. CLUKEY, LSOC 51-22

| FIND NO. PART NO. | PART NAME | PART FUNCTION | a. FAILURE MODE b. CAUSE c. FMN d. DETECTION METHOD e. CORRECTING ACTION f. TIME TO EFFECT g. TIMEFRAME | FAILURE EFFECT ON SYSTEM PERFORMANCE | FAILURE EFFECT ON VEHICLE SYSTEMS AND/OR PERSONNEL SAFETY | CRIT CAT |
|---|---|---|---|---|---|---|
| | | | a. HIGH OUTPUT | BRIDGE MAY RUN SLOWER THAN COMMANDED OR SPEED CLIPPING MODULE WILL DETECT DIFFERENCE BETWEEN TACHOMETER FEEDBACK VOLTAGE AND MOTOR ARMATURE VOLTAGE. OVERSPEED RELAY WILL DROP OUT, SHUTTING DOWN CRANE AND SETTING ALL BRAKES. | NO EFFECT. | 3 |
| | J1-8 RATE REF-ERENCE OUTPUT (CRANE #2 ONLY) | PROVIDES RATE REFERENCE OUTPUT TO SCM | a. LOW OR NO OUTPUT | BRIDGE TRAVEL DRIVE WILL RUN SLOWER THAN COMMANDED OR NOT AT ALL. | NO EFFECT. | 3 |
| | | | a. HIGH OUTPUT | BRIDGE DRIVE WILL NOT DECELERATE UNTIL MASTER SWITCH REACHES NEUTRAL (OFF) POSITION. BRAKES WILL SET AFTER 2.5 SECONDS OR WHEN NEAR ZERO SPEED IS DETECTED, WHICHEVER OCCURS FIRST. SLOW SPEED IN CLOSE PROX-IMITY TO AN OBSTRUCTION WILL ALLOW TIME FOR BRIDGE TO STOP. | NO EFFECT. | 3 |
| | J1-10 SLOW SPEED RANGE (CRANE #2 ONLY) | PROVIDES SLOW SPEED RANGE SELECTED SIGNAL TO SPEED CLIPPING MODULE. | a. LOW OR NO OUTPUT | BRIDGE TRAVEL DRIVE SPEED WILL NOT EXCEED SLOW RANGE MAXIMUM SPEED WHEN HIGH RANGE IS SELECTED. | NO EFFECT. | 3 |
| | | | a. HIGH OUTPUT | BRIDGE SLOW TRAVEL DRIVE SPEED WILL NOT BE CLIPPED TO MATCH SLOW RANGE MAXIMUM SPEED OF CRANE #1. | NO EFFECT. | 3 |

Table 14 (Page 27 of 35). **ELECTRICAL FMEA - BRIDGE**

**System** 30-TON BRIDGE CRANE, OPF-3
**Subsystem** BRIDGE
**Drawing No.** EDERER EB-2286 **Sheet No.**
**PMN** H70-1379-01

**Program** SPACE SHUTTLE

**Station Set/Facility Code** GD
**Date** MARCH 1991
**Reference Figure Used** NA
**Prepared By** P. CLUKEY, LSOC 51-22

| FIND NO. PART NO. | PART NAME | PART FUNCTION | a. FAILURE MODE<br>b. CAUSE<br>c. FMN<br>d. DETECTION METHOD<br>e. CORRECTING ACTION<br>f. TIME TO EFFECT<br>g. TIMEFRAME | FAILURE EFFECT ON SYSTEM PERFORMANCE | FAILURE EFFECT ON VEHICLE SYSTEMS AND/OR PERSONNEL SAFETY | CRIT CAT |
|---|---|---|---|---|---|---|
| | J1-1 FIELD REF-ERENCE | PROVIDES NORMAL OR ECON-OMIZE COMMAND TO BMCM. | a. LOW OR NO OUTPUT | BMCM WILL DETECT LOSS OF FIELD CURRENT AND SHUTDOWN BMCM. | NO EFFECT. | 3 |
| | | | a. HIGH OUTPUT | BMCM WILL DETECT EXCESSIVE FIELD CURRENT AND SHUTDOWN BMCM. | NO EFFECT. | 3 |
| | J1-50 CONTACT SUPPLY | SUPPLIES +15 VOLTS TO RELAY CONTACTS. | a. LOW OR NO OUTPUT | CONTACTS MAY NOT SEND HIGH ENOUGH VOLTAGE TO ENABLE BTIM. BRIDGE MAY NOT RUN. | NO EFFECT. | 3 |
| | | | a. HIGH OUTPUT | CONTACTS WILL SEND HIGH VOLTAGE TO INPUTS OF BTIM. MAY DAMAGE COMPONENTS AND DISABLE BTIM. | NO EFFECT. | 3 |
| | J1-75 OVERSPEED RELAY (HIGH) | PROVIDES + VOLTAGE FOR OVERSPEED RELAY. | a. LOW OR NO OUTPUT | OVERSPEED RELAY WILL NOT ENER-GIZE. BRIDGE WILL NOT POWER UP. | NO EFFECT. | 3 |
| | | | a. CONTINUOUS OUTPUT | OVERSPEED RELAY MAY NOT DE-ENERGIZE WHEN AN OVERSPEED OCCURS. REQUIRES PREVIOUS FAILURE IN BRIDGE CONTROL CIRCU-ITRY. | NO EFFECT. | 3 |
| | J1-29 OVERSPEED RELAY (LOW) | PROVIDES - VOLTAGE FOR OVERSPEED RELAY. | a. LOW OR NO OUTPUT | OVERSPEED RELAY WILL NOT ENER-GIZE. BRIDGE WILL NOT POWER UP. | NO EFFECT. | 3 |
| | | | a. CONTINUOUS OUTPUT | OVERSPEED RELAY MAY NOT DE-ENERGIZE WHEN AN OVERSPEED OCCURS. REQUIRES PREVIOUS FAILURE IN BRIDGE CONTROL CIRCU-ITRY. | NO EFFECT. | 3 |

Table 14 (Page 28 of 35). **ELECTRICAL FMEA - BRIDGE**

**System** 30-TON BRIDGE CRANE, OPF-3
**Subsystem** BRIDGE
**Drawing No.** EDERER EB-2286 **Sheet No.**
**PMN** H70-1379-01

**Program** SPACE SHUTTLE

**Station Set/Facility Code** GD
**Date** MARCH 1991
**Reference Figure Used** NA
**Prepared By** P. CLUKEY, LSOC 51-22

| FIND NO. PART NO. | PART NAME | PART FUNCTION | a. FAILURE MODE<br>b. CAUSE<br>c. FMN<br>d. DETECTION METHOD<br>e. CORRECTING ACTION<br>f. TIME TO EFFECT<br>g. TIMEFRAME | FAILURE EFFECT ON SYSTEM PERFORMANCE | FAILURE EFFECT ON VEHICLE SYSTEMS AND/OR PERSONNEL SAFETY | CRIT CAT |
|---|---|---|---|---|---|---|
| | J1-27 ZERO SPEED RELAY | PROVIDES + 24 VOLTS TO ENERGIZE ZERO SPEED RELAY. | a. LOW OR NO OUTPUT | BZS RELAY WILL NOT ENERGIZE. BRAKES WILL NOT SET UNTIL BCMD CONTACT (17AM18) TIMES OUT. | NO EFFECT. | 3 |
| | | | a. CONTINUOUS OUTPUT | BRAKES WILL SET WHEN MASTER SWITCH REACHES THE OFF POSITION. MAY CAUSE EXCESSIVE BRAKE WEAR. | NO EFFECT. | 3 |
| SCM EC-2101 (CRANE #2 ONLY) | SPEED CLIP-PING MODULE | LIMITS MAGNITUDE OF RATE REFERENCE VOLTAGE FROM BTIM TO BMCM. | | | | |
| | J2 | CLIPPED RATE REFERENCE OUTPUT. | a. LOW OR NO OUTPUT | BRIDGE WILL RUN SLOWER THAN EXPECTED OR NOT AT ALL. | NO EFFECT. | 3 |
| | | | a. HIGH OUTPUT | BRIDGE DRIVE WILL NOT DECELERATE UNTIL MASTER SWITCH REACHES NEUTRAL (OFF) POSITION. BRAKES WILL SET AFTER 2.5 SECONDS OR WHEN NEAR ZERO SPEED IS DETECTED, WHICHEVER OCCURS FIRST. SLOW SPEED IN CLOSE PROX-IMITY TO AN OBSTRUCTION WILL ALLOW TIME FOR BRIDGE TO STOP. | NO EFFECT. | 3 |
| MOV NONE | METAL OXIDE VARISTOR (15J3) | PROVIDES OVERVOLTAGE PROTECTION TO BRAKE CIRCUIT. | a. FAILS OPEN | LOSS OF OVERVOLTAGE PROTECTION. REQUIRES FAILURE IN POWER SUPPLY. | NO EFFECT. | 3 |
| | | | a. FAILS SHORT | TRAVEL BRAKE POWER FUSE WILL PROTECT TRAVEL BRAKE TRANS-FORMER. | NO EFFECT. | 3 |
| BRECT ED-1600B | BRIDGE RECTIFIER (15L3) | CONVERTS AC TO DC FOR BRIDGE MOTOR BRAKES. | a. FAILS OPEN | BRAKES WILL NOT RELEASE. BRIDGE WILL NOT MOVE. | NO EFFECT. | 3 |

Table 14 (Page 29 of 35). **ELECTRICAL FMEA - BRIDGE**

**System** 30-TON BRIDGE CRANE, OPF-3
**Subsystem** BRIDGE
**Drawing No.** EDERER EB-2286 **Sheet No.**
**PMN** H70-1379-01

**Program** SPACE SHUTTLE

**Station Set/Facility Code** GD
**Date** MARCH 1991
**Reference Figure Used** NA
**Prepared By** P. CLUKEY, LSOC 51-22

| FIND NO. PART NO. | PART NAME | PART FUNCTION | a. FAILURE MODE b. CAUSE c. FMN d. DETECTION METHOD e. CORRECTING ACTION f. TIME TO EFFECT g. TIMEFRAME | FAILURE EFFECT ON SYSTEM PERFORMANCE | FAILURE EFFECT ON VEHICLE SYSTEMS AND/OR PERSONNEL SAFETY | CRIT CAT |
|---|---|---|---|---|---|---|
| | | | a. FAILS SHORT | EXCESSIVE CURRENT WILL CAUSE FUSE PROTECTING TRAVEL BRAKE TRANSFORMER TO BLOW. | NO EFFECT. | 3 |
| NONE NONE | RESISTOR (15O3,5) | CURRENT LIMITING RESISTOR FOR BRAKES. | a. FAILS OPEN | ASSOCIATED BRAKE WILL NOT RELEASE. BRIDGE WILL NOT MOVE. | NO EFFECT. | 3 |
| | | | a. FAILS SHORT | ASSOCIATED BRAKE COIL MAY OVER-HEAT AND FAIL, CAUSING BRAKE TO NOT RELEASE. | NO EFFECT. | 3 |
| NONE IC9516-160 | BRIDGE EAST AND WEST MOTOR BRAKES (15Q4,6) | PROVIDES TORQUE TO SLOW/STOP BRIDGE WHEN BRAKE COIL IS DE-ENERGIZED. | a. FAILS OPEN (COIL) | BRAKE WILL NOT RELEASE. BRIDGE WILL NOT MOVE. | NO EFFECT. | 3 |
| | | | a. FAILS SHORT (COIL) | EXCESSIVE CURRENT WILL CAUSE FUSE PROTECTING TRAVEL BRAKE TRANSFORMER TO BLOW. | NO EFFECT. | 3 |
| BCB TED1340-20WL | BRIDGE CIRCUIT BREAKER 480 V 20 A (15C7) | PROTECTS MAIN POWER LINE FROM OVERLOADS IN BRIDGE DRIVE CIRCUIT. | a. PREMATURE OPERATION | LOSS OF POWER TO BRIDGE DRIVE CIRCUIT. BRIDGE WILL NOT MOVE. | NO EFFECT. | 3 |
| | | | a. FAILURE TO OPERATE | POSSIBLE DAMAGE TO 480 V POWER SUPPLY. REQUIRES PREVIOUS FAILURE IN BRIDGE DRIVE CIRCUIT. | NO EFFECT. | 3 |
| BIT 9T21B300-3G53 | BRIDGE ISO-LATION TRANS-FORMER (15C10) | CONVERTS 480 VAC TO 230 VAC FOR BRIDGE CONTROL CIRCUIT. | a. FAILS OPEN | LOSS OF POWER TO BRIDGE DRIVE. BRIDGE WILL NOT RUN. | NO EFFECT. | 3 |

Table 14 (Page 30 of 35). **ELECTRICAL FMEA - BRIDGE**

**System** 30-TON BRIDGE CRANE, OPF-3
**Subsystem** BRIDGE
**Drawing No.** EDERER EB-2286 **Sheet No.**
**PMN** H70-1379-01

**Program** SPACE SHUTTLE

**Station Set/Facility Code** GD
**Date** MARCH 1991
**Reference Figure Used** NA
**Prepared By** P. CLUKEY, LSOC 51-22

| FIND NO. PART NO. | PART NAME | PART FUNCTION | a. FAILURE MODE b. CAUSE c. FMN d. DETECTION METHOD e. CORRECTING ACTION f. TIME TO EFFECT g. TIMEFRAME | FAILURE EFFECT ON SYSTEM PERFORMANCE | FAILURE EFFECT ON VEHICLE SYSTEMS AND/OR PERSONNEL SAFETY | CRIT CAT |
|---|---|---|---|---|---|---|
| | | | a. FAILS SHORT | BFSA WILL DETECT VOLTAGE CHANGE AND SHUTDOWN BRIDGE OR EXCESSIVE CURRENT FLOW WILL TRIP BCB SHUTTING DOWN BRIDGE. | NO EFFECT. | 3 |
| BEAM BWAM 016-01-CA-ECND | CAB AMMETER (15T7,X7) | INDICATES MOTOR ARMATURE CURRENT IN ASSOCIATED BRIDGE MOTOR. | a. FAILS OPEN | AMMETER WILL NOT INDICATE CURRENT FLOW IN ASSOCIATED BRIDGE MOTOR. | NO EFFECT. | 3 |
| | | | a. FAILS CLOSED | AMMETER WILL NOT INDICATE CURRENT FLOW IN ASSOCIATED BRIDGE MOTOR. | NO EFFECT. | 3 |
| FU27, 28, 29, 30 | AMMETER FUSES (15U9) (15X9) | PROTECT CAB AMMETERS FROM OVERCURRENT. | a. PREMATURE OPERATION | AMMETER WILL NOT INDICATE CURRENT FLOW IN ASSOCIATED BRIDGE MOTOR. | NO EFFECT. | 3 |
| | | | a. FAILS TO OPERATE | OPPOSING FUSE WILL PROTECT AMMETER. | NO EFFECT. | 3 |
| BSS, BS2 NONE | METER SHUNTS FOR BRIDGE AMMETERS (15U12,X11) | PROVIDE CIRCUIT FOR MOTOR CURRENT WHILE DIVERTING SOME CURRENT THROUGH AMMETER. | a. FAILS OPEN | BRIDGE MOTOR CURRENT WILL ATTEMPT TO RUN THROUGH AMMETER. FUSE(S) WILL BLOW TO PROTECT AMMETER. | NO EFFECT. | 3 |
| | | | a. FAILS SHORT | MOTOR CURRENT WILL BYPASS AMMETER. NO CURRENT WILL BE INDICATED BY AMMETER. | NO EFFECT. | 3 |
| BEOL 593-B034 | BRIDGE EAST OVERLOAD RELAY (15S12) | DETECTS EXCESSIVE CURRENT IN BRIDGE MOTOR CIRCUIT. | a. FAILS DEACTIVATED | BWAM WILL INDICATE EXCESSIVE CURRENT AND BCB WILL PROVIDE PROTECTION. | NO EFFECT. | 3 |
| | CONTACT NORMALLY CLOSED (17AT5) | OPENS ON BRIDGE MOTOR OVERLOAD TO DE-ENERGIZE BP RELAY. | a. FAILS OPEN | BP RELAY WILL NOT ENERGIZE AND BRIDGE WILL NOT RUN. | NO EFFECT. | 3 |

Table 14 (Page 31 of 35). **ELECTRICAL FMEA - BRIDGE**

**System** 30-TON BRIDGE CRANE, OPF-3
**Subsystem** BRIDGE
**Drawing No.** EDERER EB-2286 **Sheet No.**
**PMN** H70-1379-01

**Program** SPACE SHUTTLE

**Station Set/Facility Code** GD
**Date** MARCH 1991
**Reference Figure Used** NA
**Prepared By** P. CLUKEY, LSOC 51-22

| FIND NO. PART NO. | PART NAME | PART FUNCTION | a. FAILURE MODE b. CAUSE c. FMN d. DETECTION METHOD e. CORRECTING ACTION f. TIME TO EFFECT g. TIMEFRAME | FAILURE EFFECT ON SYSTEM PERFORMANCE | FAILURE EFFECT ON VEHICLE SYSTEMS AND/OR PERSONNEL SAFETY | CRIT CAT |
|---|---|---|---|---|---|---|
| | | | a. FAILS CLOSED | BP RELAY WILL NOT SHUT DOWN BRIDGE DRIVE WHEN AN OVERLOAD OCCURS. BEAM WILL INDICATE EXCESSIVE CURRENT AND BCB WILL PROVIDE PROTECTION. | NO EFFECT. | 3 |
| BWOL 593-B034 | BRIDGE WEST OVER-LOAD RELAY (15U11) | DETECTS EXCESSIVE CURRENT IN BRIDGE MOTOR CIRCUIT. | a. FAILS DEACTIVATED | BWAM WILL INDICATE EXCESSIVE CURRENT AND BCB WILL PROVIDE PROTECTION. | NO EFFECT. | 3 |
| | CONTACT NORMALLY CLOSED (17AU5) | OPENS ON BRIDGE MOTOR OVERLOAD TO DE-ENERGIZE BP RELAY. | a. FAILS OPEN | BP RELAY WILL NOT ENERGIZE AND BRIDGE WILL NOT RUN. | NO EFFECT. | 3 |
| | | | a. FAILS CLOSED | BP RELAY WILL NOT SHUT DOWN BRIDGE WHEN AN OVERLOAD OCCURS. BWAM WILL INDICATE EXCESSIVE CURRENT AND BCB WILL PROVIDE PROTECTION. | NO EFFECT. | 3 |
| NONE NONE | RESISTOR 2Ω (15V12,Y11) | PROVIDES RESISTIVE LOAD FOR BRIDGE DRIVE MOTORS. | a. FAILS OPEN | ASSOCIATED MOTOR WILL NOT SUPPLY TORQUE. CAB AMMETERS WILL INDICATE DRIVE IMBALANCE. | NO EFFECT. | 3 |
| | | | a. FAILS SHORT | CURRENT IMBALANCE BETWEEN BRIDGE MOTORS WILL BE INDICATED BY CAB AMMETERS. | NO EFFECT. | 3 |
| NONE 2513AT | BRIDGE DRIVE MOTOR ARMATURES (15W13,Z13) | PROVIDES TORQUE TO DRIVE BRIDGE. | a. FAILS OPEN | FAILED MOTOR WILL NOT SUPPLY TORQUE TO DRIVE BRIDGE. OTHER MOTOR WILL DRIVE BRIDGE AND AMMETERS WILL INDICATE LOAD IMBALANCE. | NO EFFECT. | 3 |

Table 14 (Page 32 of 35). **ELECTRICAL FMEA - BRIDGE**

**System** 30-TON BRIDGE CRANE, OPF-3
**Subsystem** BRIDGE
**Drawing No.** EDERER EB-2286 **Sheet No.**
**PMN** H70-1379-01

**Program** SPACE SHUTTLE

**Station Set/Facility Code** GD
**Date** MARCH 1991
**Reference Figure Used** NA
**Prepared By** P. CLUKEY, LSOC 51-22

| FIND NO. PART NO. | PART NAME | PART FUNCTION | a. FAILURE MODE b. CAUSE c. FMN d. DETECTION METHOD e. CORRECTING ACTION f. TIME TO EFFECT g. TIMEFRAME | FAILURE EFFECT ON SYSTEM PERFORMANCE | FAILURE EFFECT ON VEHICLE SYSTEMS AND/OR PERSONNEL SAFETY | CRIT CAT |
|---|---|---|---|---|---|---|
| | | | a. FAILS SHORT | OVERCURRENT CIRCUIT IN BMCM WILL SHUTDOWN POWER TO DRIVE MOTORS. BFSA MAY ALSO DETECT EXCESSIVE CURRENT AND DISABLE BMCM. | NO EFFECT. | 3 |
| NONE NONE | VARIABLE RESISTOR (15T16) | PROVIDES ADJUSTMENT TO BALANCE FIELD CURRENT BETWEEN EAST AND WEST BRIDGE MOTORS. | a. FAILS OPEN | ONE OR BOTH DRIVE MOTORS WILL NOT RUN. BRIDGE MAY NOT RUN OR RUN ON ONE MOTOR. | NO EFFECT. | 3 |
| | | | a. FAILS SHORT | MAY CAUSE DRIVE IMBALANCE OR EXCESSIVE FIELD CURRENT WHICH WOULD BE DETECTED BY BMCM AND CURRENT LIMITED. | NO EFFECT. | 3 |
| NONE NONE | BRIDGE MOTOR FIELD COILS (15S18,W18) | PROVIDES FIELD FLUX FOR ARMATURE TO WORK AGAINST. | a. FAILS OPEN | FAILED MOTOR WILL NOT SUPPLY TORQUE TO DRIVE BRIDGE. CAB AMMETERS WILL INDICATE DRIVE IMBALANCE. | NO EFFECT. | 3 |
| | | | a. FAILS SHORT | FUSES IN ASSOCIATED MCM WILL PROTECT MCM AND WIRING AGAINST SHORT/OVERLOAD. | NO EFFECT. | 3 |
| NONE NONE | FAULT RESISTORS 1.0Ω (15E16) | PROVIDE VOLTAGE DROP FOR BFSA. | a. FAILS OPEN | ABSENCE OF VOLTAGE WILL BE DETECTED BY BFSA. BMCM WILL BE SHUT DOWN. | NO EFFECT. | 3 |
| | | | a. FAILS SHORT | ABNORMAL VOLTAGE WILL BE DETECTED BY BFSA. BMCM WILL BE SHUT DOWN. | NO EFFECT. | 3 |
| BSRA 0003722 | BRIDGE SCALING RESISTOR ASSEMBLY 620KΩ (15E21) | REDUCE VOLTAGE FROM FAULT RESISTORS TO CONFORM TO BFSA CIRCUITRY. | a. FAILS OPEN | ABSENCE OF VOLTAGE WILL BE DETECTED BY BFSA. BMCM WILL BE SHUT DOWN. | NO EFFECT. | 3 |

Table 14 (Page 33 of 35). **ELECTRICAL FMEA - BRIDGE**

**System** 30-TON BRIDGE CRANE, OPF-3
**Subsystem** BRIDGE
**Drawing No.** EDERER EB-2286 **Sheet No.**
**PMN** H70-1379-01

**Program** SPACE SHUTTLE

**Station Set/Facility Code** GD
**Date** MARCH 1991
**Reference Figure Used** NA
**Prepared By** P. CLUKEY, LSOC 51-22

| FIND NO. PART NO. | PART NAME | PART FUNCTION | a. FAILURE MODE b. CAUSE c. FMN d. DETECTION METHOD e. CORRECTING ACTION f. TIME TO EFFECT g. TIMEFRAME | FAILURE EFFECT ON SYSTEM PERFORMANCE | FAILURE EFFECT ON VEHICLE SYSTEMS AND/OR PERSONNEL SAFETY | CRIT CAT |
|---|---|---|---|---|---|---|
| | | | a. FAILS SHORT | ABNORMAL VOLTAGE WILL BE DETECTED BY BFSA. BMCM WILL BE SHUT DOWN. | NO EFFECT. | 3 |
| BRDY KRPA11-DG24 | BRIDGE READY RELAY (15A25) | DE-ENERGIZES WHEN BFSA DETECTS A LINE FAULT. | a. FAILS DEACTIVATED (DE-ENERGIZED POSITION) | BR RELAY WILL NOT BE ENERGIZED AND BRIDGE WILL NOT RUN. | NO EFFECT. | 3 |
| | CONTACT (17AQ15) | ENERGIZES BR RELAY. | a. FAILS OPEN | BR RELAY WILL NOT BE ENERGIZED AND BRIDGE WILL NOT RUN. | NO EFFECT. | 3 |
| | | | a. FAILS CLOSED | BR RELAY WILL NOT DISABLE BRIDGE CONTROL CIRCUITS. BFSA WILL DISABLE BMCM WHEN LINE FAULT OCCURS. | NO EFFECT. | 3 |
| BFSA 0001802 | BRIDGE FAULT SENSE ASSEMBLY (15D26) | MONITOR BRIDGE MOTOR CURRENT FOR ABNORMAL CONDITIONS. | | | | |
| | J1-6 | PROVIDE GROUND FOR BRDY RELAY. | a. FAILS HIGH | BRDY RELAY WILL NOT ENERGIZE. BRIDGE WILL NOT RUN. | NO EFFECT. | 3 |
| | | | a. FAILS LOW | BRDY WILL REMAIN ENERGIZED IF LINE FAULT OCCURS. BFSA WILL DISABLE BMCM. | NO EFFECT. | 3 |
| | J2-11 | PROVIDES RESET SIGNAL TO BMCM. | a. FAILS HIGH | RESET SIGNAL WILL NOT REACH BMCM. BP RELAY WILL DE-ENERGIZE BRIDGE CONTROLS AND BRAKES WILL (REMAIN) SET. | NO EFFECT. | 3 |
| | | | a. FAILS LOW | LOW RESET SIGNAL WILL DISABLE BMCM. BRIDGE WILL NOT RUN. | NO EFFECT. | 3 |

Table 14 (Page 34 of 35). **ELECTRICAL FMEA - BRIDGE**

**System** 30-TON BRIDGE CRANE, OPF-3
**Subsystem** BRIDGE
**Drawing No.** EDERER EB-2286 **Sheet No.**
**PMN** H70-1379-01

**Program** SPACE SHUTTLE

**Station Set/Facility Code** GD
**Date** MARCH 1991
**Reference Figure Used** NA
**Prepared By** P. CLUKEY, LSOC 51-22

| FIND NO. PART NO. | PART NAME | PART FUNCTION | a. FAILURE MODE<br>b. CAUSE<br>c. FMN<br>d. DETECTION METHOD<br>e. CORRECTING ACTION<br>f. TIME TO EFFECT<br>g. TIMEFRAME | FAILURE EFFECT ON SYSTEM PERFORMANCE | FAILURE EFFECT ON VEHICLE SYSTEMS AND/OR PERSONNEL SAFETY | CRIT CAT |
|---|---|---|---|---|---|---|
| | J2-12 | PROVIDE ENABLE SIGNAL TO BMCM. | a. FAILS HIGH | BFSA WILL NOT ENABLE BMCM. BRIDGE WILL NOT RUN. | NO EFFECT. | 3 |
| | | | a. FAILS LOW | LINE FAULT WILL DE-ENERGIZE BRDY RELAY, SHUTTING DOWN BRIDGE. | NO EFFECT. | 3 |
| BMCM MODEL 842 | BRIDGE MOTOR CONTROL MODULE (15N20) | PROVIDES AND CONTROLS ARMATURE AND FIELD CURRENTS TO BRIDGE MOTORS. | | | | |
| | J2-3 READY | SENDS BMCM READY SIGNAL TO BFSA. | a. FAILS HIGH | BFSA WILL NOT ENABLE BMCM. BRIDGE WILL NOT RUN. | NO EFFECT. | 3 |
| | | | a. FAILS LOW | BMCM WILL CONTINUOUSLY SEND READY SIGNAL TO BFSA WHEN A FAULT EXISTS. REQUIRES PREVIOUS FAILURE IN BRIDGE CONTROL CIRCUITRY. | NO EFFECT. | 3 |
| | J2-4 +25 VOLT | +25 VOLT SUPPLY LINE TO BFSA | a. LOW OR NO OUTPUT | BRDY RELAY MAY NOT ENERGIZE BRIDGE CONTROLS AND BC CONTACT (15H25) MAY NOT ALLOW BFSA TO ENABLE BMCM. | NO EFFECT. | 3 |
| | | | a. FAILS HIGH | EXCESSIVE VOLTAGE MAY DAMAGE COMPONENTS CAUSING BRIDGE TO NOT RUN. | NO EFFECT. | 3 |
| | J1-3 -15 VOLT | PROVIDES -15 VOLTS TO BFSA CIRCUITRY. | a. HIGH OR NO OUTPUT | BFSA MAY NOT DETECT LINE FAULT AND DISABLE BMCM. REQUIRES DOUBLE FAILURE. | NO EFFECT. | 3 |
| | | | a. LOW OUTPUT | BFSA MAY NOT DETECT LINE FAULT AND DISABLE BMCM. REQUIRES DOUBLE FAILURE. | NO EFFECT. | 3 |
| | J1-4 +15 VOLT | PROVIDES +15 VOLTS TO BFSA CIRCUITRY | a. LOW OR NO OUTPUT | LOSS OF POWER TO BFSA CIRCUITRY. BFSA WILL NOT ENABLE BMCM. | NO EFFECT. | 3 |

Table 14 (Page 35 of 35). **ELECTRICAL FMEA - BRIDGE**

**System** 30-TON BRIDGE CRANE, OPF-3
**Subsystem** BRIDGE
**Drawing No.** EDERER EB-2286 **Sheet No.**
**PMN** H70-1379-01

**Program** SPACE SHUTTLE

**Station Set/Facility Code** GD
**Date** MARCH 1991
**Reference Figure Used** NA
**Prepared By** P. CLUKEY, LSOC 51-22

| FIND NO. PART NO. | PART NAME | PART FUNCTION | a. FAILURE MODE<br>b. CAUSE<br>c. FMN<br>d. DETECTION METHOD<br>e. CORRECTING ACTION<br>f. TIME TO EFFECT<br>g. TIMEFRAME | FAILURE EFFECT ON SYSTEM PERFORMANCE | FAILURE EFFECT ON VEHICLE SYSTEMS AND/OR PERSONNEL SAFETY | CRIT CAT |
|---|---|---|---|---|---|---|
| | | | a. HIGH OUTPUT | BFSA MAY NOT DETECT LINE FAULT AND DISABLE BMCM. REQUIRES DOUBLE FAILURE. | NO EFFECT. | 3 |
| | F1, F2 FIELD SUPPLY | PROVIDES CURRENT FOR BRIDGE MOTOR FIELD COILS. | a. LOW OR NO OUTPUT | BMCM FIELD LOSS CIRCUIT WILL DETECT ABNORMAL OUTPUT AND REMOVE READY INDICATION TO BFSA. | NO EFFECT. | 3 |
| | | | a. HIGH OUTPUT | OUTPUT IS LIMITED BY FIELD OUTPUT CIRCUIT AND BTIM CONTROL SIGNAL. DOUBLE FAILURE REQUIRED. | NO EFFECT. | 3 |
| | A1, A2 ARMATURE SUPPLY | PROVIDES ARMATURE CURRENT FOR BRIDGE MOTORS. | a. LOW OR NO OUTPUT | BRIDGE WILL NOT MOVE OR WILL RUN SLUGGISHLY. | NO EFFECT. | 3 |
| | | | a. HIGH OUTPUT | HIGH ARMATURE WILL BE DETECTED BY BFSA, INSTANTANEOUS OVERCURRENT CIRCUIT, OR BEOL AND BWOL. BRIDGE WILL BE SHUT DOWN.<br><br>**Note:** ALL INPUTS TO BMCM, BFSA, AND BTIM WERE ANALYZED AS THE RESPECTIVE OUTPUTS OF THE COMPONENTS SUPPLYING THE SIGNALS. | NO EFFECT. | 3 |

Table 15 (Page 1 of 32). **ELECTRICAL FMEA - TROLLEY**

**System** 30-TON BRIDGE CRANE, OPF-3
**Subsystem** TROLLEY
**Drawing No.** EDERER EB-2286 **Sheet No.**
**PMN** H70-1379-01

**Program** SPACE SHUTTLE

**Station Set/Facility Code** GD
**Date** MARCH 1991
**Reference Figure Used** NA
**Prepared By** P. CLUKEY, LSOC 51-22

| FIND NO. PART NO. | PART NAME | PART FUNCTION | a. FAILURE MODE b. CAUSE c. FMN d. DETECTION METHOD e. CORRECTING ACTION f. TIME TO EFFECT g. TIMEFRAME | FAILURE EFFECT ON SYSTEM PERFORMANCE | FAILURE EFFECT ON VEHICLE SYSTEMS AND/OR PERSONNEL SAFETY | CRIT CAT |
|---|---|---|---|---|---|---|
| FU23, 24 FRSR 4-1/2 | FUSE (14K1) | PROTECT CONTROL POWER FROM SHORT/OVERLOAD IN TROLLEY CONTROL CIRCUIT. | a. PREMATURE OPERATION | LOSS OF POWER TO TROLLEY CONTROL CIRCUIT. TROLLEY BRAKES WILL SET. | NO EFFECT. | 3 |
| | | | a. FAILS TO OPERATE | OPPOSING FUSE WILL PROTECT CONTROL POWER FROM SHORT/ OVERLOAD IN TROLLEY CONTROL CIRCUIT. REQUIRES PREVIOUS FAILURE IN TROLLEY CONTROL CIRCUIT. | NO EFFECT. | 3 |
| TCT TA-1-81216 | TROLLEY CONTROL TRANS-FORMER (14N3) | PROVIDES 120 VAC POWER TO TROLLEY CONTROL CIRCUIT AND TROLLEY TRAVEL INTERFACE MODULE. | a. FAILS OPEN | LOSS OF POWER TO TROLLEY CONTROL CIRCUIT. TROLLEY BRAKES WILL SET. | NO EFFECT. | 3 |
| | | | a. FAILS SHORTED | LOSS OF POWER TO TROLLEY CONTROL CIRCUIT. TROLLEY BRAKES WILL SET. FU23, 24 WILL PROTECT CONTROL POWER. | NO EFFECT. | 3 |
| FU25 FRNR 10 | FUSE (14G4) | PROTECTS TROLLEY CONTROL TRANSFORMER FROM SHORT/OVERLOAD IN TROLLEY CONTROL CIRCUIT. | a. PREMATURE OPERATION | LOSS OF POWER TO TROLLEY CONTROL CIRCUIT. TROLLEY BRAKES WILL SET. | NO EFFECT. | 3 |
| | | | a. FAILS TO OPERATE | LOSS OF CURRENT OVERLOAD PRO-TECTION, WOULD REQUIRE PREVIOUS FAILURE IN TROLLEY CONTROL CIRCUIT. | NO EFFECT. | 3 |
| NONE | CONTROL PANEL OUTLET (14S6) | PROVIDE 120 VAC FOR ACCESSORIES IN CAB. | a. FAILS OPEN | LOSS OF POWER TO ANY ACCESSO-RIES PLUGGED INTO THE CAB OUTLET. | NO EFFECT. | 3 |
| | | | a. FAILS SHORT | FU25 (14G4) WILL PROTECT TROLLEY CONTROL TRANSFORMER. TROLLEY WILL SHUT DOWN. | NO EFFECT. | 3 |

Table 15 (Page 2 of 32). **ELECTRICAL FMEA - TROLLEY**

**System** 30-TON BRIDGE CRANE, OPF-3
**Subsystem** TROLLEY
**Drawing No.** EDERER EB-2286 **Sheet No.**
**PMN** H70-1379-01

**Program** SPACE SHUTTLE

**Station Set/Facility Code** GD
**Date** MARCH 1991
**Reference Figure Used** NA
**Prepared By** P. CLUKEY, LSOC 51-22

| FIND NO. PART NO. | PART NAME | PART FUNCTION | a. FAILURE MODE b. CAUSE c. FMN d. DETECTION METHOD e. CORRECTING ACTION f. TIME TO EFFECT g. TIMEFRAME | FAILURE EFFECT ON SYSTEM PERFORMANCE | FAILURE EFFECT ON VEHICLE SYSTEMS AND/OR PERSONNEL SAFETY | CRIT CAT |
|---|---|---|---|---|---|---|
| FU26 FNM 1/2 | FUSE (14K5) | PROTECT AGAINST SHORT/OVERLOAD IN TROLLEY POWER SUPPLY AND ASSOCIATED CIRCUIT. | a. PREMATURE OPERATION | LOSS OF POWER TO TROLLEY POWER SUPPLY AND ASSOCIATED CIRCUIT. TROLLEY OVERSPEED RELAY WILL DE-ENERGIZE. NORMALLY CLOSED CONTACTS (3L26) WILL CLOSE AND TRIP SHUNT MAIN CIRCUIT BREAKER. ALL BRAKES WILL SET. | NO EFFECT. | 3 |
| | | | a. FAILS TO OPERATE | FU25 (14G4) WILL PROTECT TROLLEY CONTROL TRANSFORMER FROM SHORT/OVERLOAD IN TROLLEY POWER SUPPLY. REQUIRES PREVIOUS FAILURE IN TROLLEY POWER SUPPLY CIRCUIT. | NO EFFECT. | 3 |
| TPT 700-PT200A1 | TROLLEY POWER UP RESET TIMER RELAY (14S7) | PROVIDES DELAY TO ALLOW OVERSPEED CIRCUIT TO PULL IN AND HOLD DURING POWER UP. | a. FAILS DEACTIVATED (DE-ENERGIZED POSITION) | CONTACTS (14D8) WILL NOT ALLOW POWER TO REACH TROLLEY CONTROL CIRCUIT. TROLLEY MOTOR BRAKE WILL (REMAIN) SET. | NO EFFECT. | 3 |
| | CONTACT (3J25) | PROVIDES 1 SECOND DELAY TO ALLOW TROLLEY OVERSPEED CONTACT TO OPEN BEFORE TRIPPING MCB. | a. FAILS OPEN | TROLLEY OVERSPEED CONDITION WILL NOT SHUT DOWN THE CRANE. REQUIRES PREVIOUS FAILURE IN TROLLEY MOTOR CONTROL CIRCUIT. | NO EFFECT. | 3 |
| | | | a. FAILS CLOSED | MCB WILL TRIP WHEN POWER IS APPLIED TO THE CRANE, SHUTTING DOWN CRANE. | NO EFFECT. | 3 |
| | CONTACT (14D8) | ALLOWS POWER TO REACH TROLLEY CONTROL CIRCUIT. | a. FAILS OPEN | LOSS OF POWER TO TROLLEY CONTROLS. TROLLEY MOTOR BRAKES WILL (REMAIN) SET. | NO EFFECT. | 3 |
| | | | a. FAILS CLOSED | NO EFFECT. TROLLEY OVERSPEED CONTACT WILL BREAK CIRCUIT. | NO EFFECT. | 3 |

Table 15 (Page 3 of 32). **ELECTRICAL FMEA - TROLLEY**

**System** 30-TON BRIDGE CRANE, OPF-3
**Subsystem** TROLLEY
**Drawing No.** EDERER EB-2286 **Sheet No.**
**PMN** H70-1379-01

**Program** SPACE SHUTTLE

**Station Set/Facility Code** GD
**Date** MARCH 1991
**Reference Figure Used** NA
**Prepared By** P. CLUKEY, LSOC 51-22

| FIND NO. PART NO. | PART NAME | PART FUNCTION | a. FAILURE MODE b. CAUSE c. FMN d. DETECTION METHOD e. CORRECTING ACTION f. TIME TO EFFECT g. TIMEFRAME | FAILURE EFFECT ON SYSTEM PERFORMANCE | FAILURE EFFECT ON VEHICLE SYSTEMS AND/OR PERSONNEL SAFETY | CRIT CAT |
|---|---|---|---|---|---|---|
| | CONTACT (14Q8) | ALLOW TROLLEY OVERSPEED RELAY TO PULL IN AND HOLD. | a. FAILS OPEN | TROLLEY OVERSPEED RELAY WILL NOT ENERGIZE. TROLLEY CONTROLS WILL NOT BE ENERGIZED AND MCB WILL TRIP AFTER 1 SECOND WHEN TPT CONTACT (3J26) CLOSES. ALL BRAKES WILL (REMAIN) SET. | NO EFFECT. | 3 |
| | | | a. FAILS CLOSED | NO EFFECT. CRANE WILL SHUT DOWN ON OVERSPEED. | NO EFFECT. | 3 |
| TOSR 700-P200A1 | TROLLEY OVERSPEED RELAY (14S7) | TRIP MCB, SHUTTING DOWN CRANE ON OVERSPEED. | a. FAILS DEACTIVATED (DE-ENERGIZED POSITION) | MCB WILL TRIP WHEN TPT CONTACT (3J25) CLOSES AFTER A 1 SECOND TIME DELAY. ALL BRAKES WILL (REMAIN) SET. | NO EFFECT. | 3 |
| | CONTACT, NORMALLY CLOSED (3L25) | CLOSES ON OVERSPEED TO TRIP MCB, SHUTTING DOWN CRANE. | a. FAILS OPEN | TROLLEY OVERSPEED CONDITION WILL NOT SHUT DOWN CRANE. REQUIRES PREVIOUS FAILURE IN TROLLEY MOTOR CONTROL CIRCUIT. | NO EFFECT. | 3 |
| | | | a. FAILS CLOSED | MCB WILL TRIP WHEN TPT CONTACT (3J25) CLOSES AFTER A 1 SECOND DELAY. ALL BRAKES WILL (REMAIN) SET. | NO EFFECT. | 3 |
| | CONTACT (14D10) | ALLOWS POWER TO REACH TROLLEY CONTROL CIRCUIT. | a. FAILS OPEN | LOSS OF POWER TO TROLLEY CONTROLS. TROLLEY MOTOR BRAKES WILL SET. | NO EFFECT. | 3 |
| | | | a. FAILS CLOSED | NO EFFECT. TPT CONTACT WILL BREAK CIRCUIT. | NO EFFECT. | 3 |
| TOSR 700-P200A1 | CONTACT (14Q7) | HOLDS TROLLEY OVERSPEED RELAY ENERGIZED AFTER TPT CONTACT TIMES OUT. | a. FAILS OPEN | MCB WILL TRIP WHEN TROLLEY OVERSPEED RELAY DE-ENERGIZES. ALL BRAKES WILL SET. | NO EFFECT. | 3 |
| | | | a. FAILS CLOSED | NO EFFECT. CRANE WILL SHUT DOWN ON OVERSPEED. ALL BRAKES WILL SET. | NO EFFECT. | 3 |

Table 15 (Page 4 of 32). **ELECTRICAL FMEA - TROLLEY**

**System** 30-TON BRIDGE CRANE, OPF-3
**Subsystem** TROLLEY
**Drawing No.** EDERER EB-2286 **Sheet No.**
**PMN** H70-1379-01

**Program** SPACE SHUTTLE

**Station Set/Facility Code** GD
**Date** MARCH 1991
**Reference Figure Used** NA
**Prepared By** P. CLUKEY, LSOC 51-22

| FIND NO. PART NO. | PART NAME | PART FUNCTION | a. FAILURE MODE<br>b. CAUSE<br>c. FMN<br>d. DETECTION METHOD<br>e. CORRECTING ACTION<br>f. TIME TO EFFECT<br>g. TIMEFRAME | FAILURE EFFECT ON SYSTEM PERFORMANCE | FAILURE EFFECT ON VEHICLE SYSTEMS AND/OR PERSONNEL SAFETY | CRIT CAT |
|---|---|---|---|---|---|---|
| NONE<br>T8115 | MOTOR WARNING THERMISTOR (14J8) | MEASURES THE TEMPERATURE OF THE TROLLEY MOTOR. | a. FAILS OPEN | MOTOR OVERTEMP WARNING ON CONTINUOUSLY. | NO EFFECT. | 3 |
| | | | a. FAILS SHORT | LOSS OF OVERTEMP WARNING. MOTOR OVERTEMP SHUTDOWN WILL SHUTDOWN TROLLEY IF OVERTEMP OCCURS. | NO EFFECT. | 3 |
| TMTW<br>135101 | TROLLEY MOTOR OVERTEMPERATURE WARNING MODULE (14J10) | MONITORS MOTOR WARNING THERMISTOR AND CONTROLS OVERTEMP WARNING LIGHT. | a. LOW OR NO OUTPUT | LOSS OF OVERTEMP WARNING. TMTS (OVERTEMP SHUTDOWN) WILL SHUTDOWN TROLLEY IF OVERTEMP OCCURS. | NO EFFECT. | 3 |
| | | | a. HIGH OR CONTINUOUS OUTPUT | OVERTEMP WARNING ILLUMINATED CONTINUOUSLY. TROLLEY WILL OPERATE NORMALLY. | NO EFFECT. | 3 |
| NONE<br>9001-KP-1 | MOTOR OVERTEMP WARNING LIGHT (14U10) | INDICATES AN ABOVE NORMAL OPERATING TEMPERATURE. | a. FAILS OPEN | LOSS OF OVERTEMP WARNING. TMTS (OVERTEMP SHUTDOWN) WILL SHUTDOWN TROLLEY IF OVERTEMP OCCURS. | NO EFFECT. | 3 |
| | | | a. FAILS SHORT | CURRENT OVERLOAD WILL BLOW FU25. TROLLEY CONTROLS WILL DE-ENERGIZE AND TROLLEY BRAKES WILL SET. | NO EFFECT. | 3 |
| NONE<br>T8155 | MOTOR SHUTDOWN THERMISTOR (14O8) | MEASURES THE TEMPERATURE OF THE TROLLEY MOTOR. | a. FAILS OPEN | TMTS (OVERTEMP SHUTDOWN) WILL DE-ENERGIZE TOH RELAY AND ENERGIZE OVERTEMP SHUTDOWN INDICATOR. TOH RELAY WILL SHUTDOWN TROLLEY AND SET BRAKES. | NO EFFECT. | 3 |

Table 15 (Page 5 of 32). **ELECTRICAL FMEA - TROLLEY**

**System** 30-TON BRIDGE CRANE, OPF-3
**Subsystem** TROLLEY
**Drawing No.** EDERER EB-2286 **Sheet No.**
**PMN** H70-1379-01

**Program** SPACE SHUTTLE

**Station Set/Facility Code** GD
**Date** MARCH 1991
**Reference Figure Used** NA
**Prepared By** P. CLUKEY, LSOC 51-22

| FIND NO. PART NO. | PART NAME | PART FUNCTION | a. FAILURE MODE b. CAUSE c. FMN d. DETECTION METHOD e. CORRECTING ACTION f. TIME TO EFFECT g. TIMEFRAME | FAILURE EFFECT ON SYSTEM PERFORMANCE | FAILURE EFFECT ON VEHICLE SYSTEMS AND/OR PERSONNEL SAFETY | CRIT CAT |
|---|---|---|---|---|---|---|
| | | | a. FAILS SHORT | LOSS OF OVERTEMP SHUTDOWN. TMTW WILL WARN OF OVERHEAT CONDITION. | NO EFFECT. | 3 |
| TMTS 135101 | TROLLEY MOTOR OVERTEMPERATURE SHUTDOWN MODULE (14012) | MONITORS MOTOR OVERTEMP SHUTDOWN THERMISTOR, CONTROLS SHUTDOWN INDICATOR AND RELAY. | a. LOW OR NO OUTPUT | LOSS OF OVERTEMP SHUTDOWN. TMTW WILL WARN OF OVERHEAT CONDITION. | NO EFFECT. | 3 |
| | | | a. HIGH OR CONTINUOUS OUTPUT | TOH WILL BE ENERGIZED, SHUTTING DOWN TROLLEY AND SETTING BRAKES. SHUTDOWN INDICATOR WILL BE ON. | NO EFFECT. | 3 |
| NONE 9001-KP-1R9 | TROLLEY MOTOR OVERTEMP SHUTDOWN LIGHT (14U12) | INDICATES WHEN SHUTDOWN DUE TO OVERTEMP HAS OCCURRED. | a. FAILS OPEN | LOSS OF SHUTDOWN INDICATION TROLLEY WILL SHUTDOWN AND BRAKES WILL SET ON OVERHEAT. | NO EFFECT. | 3 |
| | | | a. FAILS SHORT | CURRENT OVERLOAD WILL BLOW FU25. TROLLEY CONTROLS WILL DE-ENERGIZE AND BRAKES WILL SET. | NO EFFECT. | 3 |
| TOH 700-P200A1 | TROLLEY OVERTEMP SHUTDOWN RELAY (14U13) | DE-ENERGIZES WHEN TMTS DETECTS OVERHEAT CONDITION. | a. FAILS DEACTIVATED (DE-ENERGIZED POSITION) | TROLLEY WILL SHUT DOWN AND BRAKES WILL REMAIN SET. | NO EFFECT. | 3 |
| | | CONTACT (14F27) | a. FAILS OPEN | TROLLEY RUN RELAY (BR) WILL NOT ENERGIZE. TROLLEY WILL SHUTDOWN AND BRAKES WILL (REMAIN) SET. | NO EFFECT. | 3 |

Table 15 (Page 6 of 32). **ELECTRICAL FMEA - TROLLEY**

**System** 30-TON BRIDGE CRANE, OPF-3
**Subsystem** TROLLEY
**Drawing No.** EDERER EB-2286 **Sheet No.**
**PMN** H70-1379-01

**Program** SPACE SHUTTLE

**Station Set/Facility Code** GD
**Date** MARCH 1991
**Reference Figure Used** NA
**Prepared By** P. CLUKEY, LSOC 51-22

| FIND NO. PART NO. | PART NAME | PART FUNCTION | a. FAILURE MODE<br>b. CAUSE<br>c. FMN<br>d. DETECTION METHOD<br>e. CORRECTING ACTION<br>f. TIME TO EFFECT<br>g. TIMEFRAME | FAILURE EFFECT ON SYSTEM PERFORMANCE | FAILURE EFFECT ON VEHICLE SYSTEMS AND/OR PERSONNEL SAFETY | CRIT CAT |
|---|---|---|---|---|---|---|
| | | | a. FAILS CLOSED | LOSS OF AUTOMATIC TROLLEY SHUT-DOWN ON OVERHEAT. RED INDICATOR IN CAB WILL INDICATE OVERHEAT CONDITION. | NO EFFECT. | 3 |
| TRAVEL 9001-KS-11B | SPEED SELECTOR SWITCH (14K14) | CLOSES TO ENERGIZE FULL SPEED RELAY (TFS). | a. FAILS OPEN | TROLLEY WILL RUN IN SLOW SPEED RANGE FOR BOTH SWITCH POSITIONS. | NO EFFECT. | 3 |
| | NOTE: DOES NOT COMPLY WITH NSS/GO-1740.9 REQUIREMENTS WITH REGARD TO OPERATION AT HIGHER SPEEDS THAN SELECTED. | | a. FAILS CLOSED<br>b. STUCK/WELDED CONTACTS<br>c. NA<br>d. VISUAL<br>e. RELEASE MASTER SWITCH, STOP, OR E-STOP<br>f. 6.9 SECONDS (MIN)<br>g. 3 SECONDS | TROLLEY WILL REMAIN IN HIGH SPEED RANGE. | NO EFFECT. THERE IS SUFFICIENT TIME FOR OPERATOR TO REACT. SEE SECTION 2.2.a. | 3 |
| TFS 700-P200A1 | TROLLEY FULL SPEED RELAY (14S14) | CONTACT CLOSES TO ENERGIZE TNS RELAY TO ENABLE HIGH SPEED RANGE. | a. FAILS DEACTIVATED (DE-ENERGIZED POSITION) | TROLLEY WILL RUN IN SLOW SPEED RANGE WHEN EITHER SPEED RANGE SELECTED. | NO EFFECT. | 3 |
| | CONTACT (14Q16) | | a. FAILS OPEN | TROLLEY WILL RUN IN SLOW SPEED RANGE WHEN EITHER SPEED RANGE SELECTED. | NO EFFECT. | 3 |

Table 15 (Page 7 of 32). **ELECTRICAL FMEA - TROLLEY**

**System** 30-TON BRIDGE CRANE, OPF-3
**Subsystem** TROLLEY
**Drawing No.** EDERER EB-2286 **Sheet No.**
**PMN** H70-1379-01

**Program** SPACE SHUTTLE

**Station Set/Facility Code** GD
**Date** MARCH 1991
**Reference Figure Used** NA
**Prepared By** P. CLUKEY, LSOC 51-22

| FIND NO. PART NO. | PART NAME | PART FUNCTION | a. FAILURE MODE<br>b. CAUSE<br>c. FMN<br>d. DETECTION METHOD<br>e. CORRECTING ACTION<br>f. TIME TO EFFECT<br>g. TIMEFRAME | FAILURE EFFECT ON SYSTEM PERFORMANCE | FAILURE EFFECT ON VEHICLE SYSTEMS AND/OR PERSONNEL SAFETY | CRIT CAT |
|---|---|---|---|---|---|---|
| | NOTE: DOES NOT COMPLY WITH NSS/GO-1740.9 REQUIREMENTS WITH REGARD TO OPERATION AT HIGHER SPEEDS THAN SELECTED. | | a. FAILS CLOSED<br>b. STUCK/WELDED CONTACTS<br>c. NA<br>d. VISUAL<br>e. RELEASE MASTER SWITCH, STOP, OR E-STOP<br>f. 6.9 SECONDS<br>g. 3 SECONDS | TROLLEY WILL REMAIN IN HIGH SPEED RANGE. | NO EFFECT. THERE IS SUFFICIENT TIME FOR OPERATOR TO REACT. SEE SECTION 2.2.a. | 3 |
| TNS 8501-RS-24 | TROLLEY NORMAL SPEED RELAY (17S26) | ENERGIZES TO ENABLE HIGH SPEED. CONTACTS CONTROL HIGH/SLOW SPEED INPUT LINES TO TTIM. | a. FAILS DEACTIVATED (DE-ENERGIZED POSITION) | TROLLEY WILL RUN IN SLOW SPEED RANGE WHEN EITHER SPEED RANGE SELECTED. | NO EFFECT. | 3 |
| | CONTACT (NORMALLY CLOSED, 13O14) | OPENS TO DE-ENERGIZE SLOW SPEED INPUT TO TTIM. | a. FAILS OPEN | TROLLEY WILL RUN NORMALLY IN HIGH SPEED. TROLLEY MAY RUN FASTER THAN INTENDED IN SLOW RANGE. OVERSPEED WILL TRIP IF SPEED EXCEEDS SLOW SPEED RANGE. | NO EFFECT. | 3 |
| | | | a. FAILS CLOSED | TROLLEY WILL RUN IN SLOW SPEED RANGE REGARDLESS OF RANGE SELECTED. | NO EFFECT. | 3 |
| | CONTACT (13M14) | CLOSES TO ENERGIZE NORMAL SPEED INPUT TO TTIM. | a. FAILS OPEN | TROLLEY WILL RUN NORMALLY IN SLOW SPEED RANGE. OVERSPEED WILL TRIP WHEN HIGH SPEED RANGE IS SELECTED AND THE TROLLEY SPEED EXCEEDS THE SLOW SPEED RANGE. | NO EFFECT. | 3 |
| | | | a. FAILS CLOSED | TROLLEY WILL RUN NORMALLY IN BOTH SPEED RANGES. | NO EFFECT. | 3 |

Table 15 (Page 8 of 32). **ELECTRICAL FMEA - TROLLEY**

**System** 30-TON BRIDGE CRANE, OPF-3
**Subsystem** TROLLEY
**Drawing No.** EDERER EB-2286 **Sheet No.**
**PMN** H70-1379-01

**Program** SPACE SHUTTLE

**Station Set/Facility Code** GD
**Date** MARCH 1991
**Reference Figure Used** NA
**Prepared By** P. CLUKEY, LSOC 51-22

| FIND NO. PART NO. | PART NAME | PART FUNCTION | a. FAILURE MODE<br>b. CAUSE<br>c. FMN<br>d. DETECTION METHOD<br>e. CORRECTING ACTION<br>f. TIME TO EFFECT<br>g. TIMEFRAME | FAILURE EFFECT ON SYSTEM PERFORMANCE | FAILURE EFFECT ON VEHICLE SYSTEMS AND/OR PERSONNEL SAFETY | CRIT CAT |
|---|---|---|---|---|---|---|
| NONE IC9445A-200A | SLOW WEST LIMIT SWITCH (14H15) | DISABLES HIGH SPEED TROLLEY TRAVEL TO THE WEST WHEN TROLLEY CLOSES TO WITHIN 54 INCHES OF WEST BUMBER STOP. | a. FAILS OPEN | TROLLEY WILL NOT TRAVEL WEST IN HIGH SPEED. | NO EFFECT. | 3 |
| | | | a. FAILS CLOSED | TROLLEY MAY RUN WEST IN HIGH SPEED RANGE UNTIL WEST FINAL LIMIT SWITCH PREVENTS FURTHER WEST TRAVEL. OPERATOR CAN STOP TROLLEY MOTION BY CENTERING MASTER SWITCH, PRESSING STOP OR E-STOP. | NO EFFECT. | 3 |
| NONE IC9445A-200A | SLOW EAST LIMIT SWITCH (14M15) | DISABLES HIGH SPEED TROLLEY TRAVEL TO THE EAST WHEN TROLLEY CLOSES TO WITHIN 54 INCHES OF EAST BUMPER STOPS. | a. FAILS OPEN | TROLLEY WILL NOT TRAVEL EAST IN HIGH SPEED. | NO EFFECT. | 3 |
| | | | a. FAILS CLOSED | TROLLEY MAY RUN EAST IN HIGH SPEED RANGE UNTIL EAST FINAL LIMIT SWITCH PREVENTS FURTHER EAST TRAVEL. OPERATOR CAN STOP TROLLEY MOTION BY CENTERING MASTER SWITCH, PRESSING STOP OR E-STOP. | NO EFFECT. | 3 |
| NONE IC9445A-200A | FINAL WEST LIMIT SWITCH (14H17) | DISABLES TROLLEY WEST TRAVEL WHEN TROLLEY CLOSES TO WITHIN 2 INCHES OF WEST BUMPER STOPS. | a. FAILS OPEN | TROLLEY WILL NOT RUN IN WEST DIRECTION. | NO EFFECT. | 3 |

Table 15 (Page 9 of 32). **ELECTRICAL FMEA - TROLLEY**

**System** 30-TON BRIDGE CRANE, OPF-3
**Subsystem** TROLLEY
**Drawing No.** EDERER EB-2286 **Sheet No.**
**PMN** H70-1379-01

**Program** SPACE SHUTTLE

**Station Set/Facility Code** GD
**Date** MARCH 1991
**Reference Figure Used** NA
**Prepared By** P. CLUKEY, LSOC 51-22

| FIND NO. PART NO. | PART NAME | PART FUNCTION | a. FAILURE MODE b. CAUSE c. FMN d. DETECTION METHOD e. CORRECTING ACTION f. TIME TO EFFECT g. TIMEFRAME | FAILURE EFFECT ON SYSTEM PERFORMANCE | FAILURE EFFECT ON VEHICLE SYSTEMS AND/OR PERSONNEL SAFETY | CRIT CAT |
|---|---|---|---|---|---|---|
| | | | a. FAILS CLOSED | TROLLEY WEST TRAVEL MAY CONTINUE IN SLOW SPEED UNTIL WEST BUMPER STOPS PREVENT FURTHER WEST TROLLEY TRAVEL. OPERATOR CAN STOP TROLLEY MOTION BY CENTERING MASTER SWITCH, PRESSING STOP OR E-STOP. | NO EFFECT. | 3 |
| NONE IC9445A-200A | FINAL EAST LIMIT SWITCH (14M17) | DISABLES TROLLEY EAST TRAVEL WHEN TROLLEY CLOSES TO WITHIN 2 INCHES OF EAST BUMPER STOPS. | a. FAILS OPEN | TROLLEY WILL NOT RUN IN EAST DIRECTION. | NO EFFECT. | 3 |
| | | | a. FAILS CLOSED | TROLLEY EAST TRAVEL MAY CONTINUE IN SLOW SPEED UNTIL EAST BUMPER STOPS PREVENT FURTHER EAST TROLLEY TRAVEL OPERATOR CAN STOP TROLLEY MOTION BY CENTERING MASTER SWITCH, PRESSING STOP OR E-STOP. | NO EFFECT. | 3 |
| TL 700-P200A1 | TROLLEY LIMITS RELAY (14S18) | ALLOWS TROLLEY BRAKES TO RELEASE AND DRIVE TO BE ENABLED WHEN A FINAL LIMIT SWITCH IS NOT TRIPPED. | a. FAILS DEACTIVATED (DE-ENERGIZED POSITION) | TROLLEY DRIVE WILL NOT RUN. BRAKES WILL (REMAIN) SET. | NO EFFECT. | 3 |
| | CONTACTS (14F29) | CLOSES TO ENERGIZE TBR AND TDE. | a. FAILS OPEN | TROLLEY DRIVE WILL NOT RUN. BRAKES WILL (REMAIN) SET. | NO EFFECT. | 3 |
| | | | a. FAILS CLOSED | TROLLEY TRAVEL MAY CONTINUE PAST FINAL LIMIT SWITCH IN SLOW SPEED RANGE UNTIL BUMPER STOPS PREVENT FURTHER TROLLEY TRAVEL.OPERATOR CAN STOP TROLLEY MOTION BY CENTERING MASTER SWITCH, PRESSING STOP OR E-STOP. | NO EFFECT. | 3 |

Table 15 (Page 10 of 32). **ELECTRICAL FMEA - TROLLEY**

**System** 30-TON BRIDGE CRANE, OPF-3
**Subsystem** TROLLEY
**Drawing No.** EDERER EB-2286 **Sheet No.**
**PMN** H70-1379-01

**Program** SPACE SHUTTLE

**Station Set/Facility Code** GD
**Date** MARCH 1991
**Reference Figure Used** NA
**Prepared By** P. CLUKEY, LSOC 51-22

| FIND NO. PART NO. | PART NAME | PART FUNCTION | a. FAILURE MODE b. CAUSE c. FMN d. DETECTION METHOD e. CORRECTING ACTION f. TIME TO EFFECT g. TIMEFRAME | FAILURE EFFECT ON SYSTEM PERFORMANCE | FAILURE EFFECT ON VEHICLE SYSTEMS AND/OR PERSONNEL SAFETY | CRIT CAT |
|---|---|---|---|---|---|---|
| TP 700-P200A1 | TROLLEY PERMISSIVE RELAY (14S19) | PREVENTS TROLLEY CONTROLS FROM RE-ENERGIZING, FOLLOWING AN OVERLOAD, UNTIL THE MASTER SWITCH IS RETURNED TO THE OFF POSITION. | a. FAILS DEACTIVATED (DE-ENERGIZED POSITION) | TROLLEY DRIVE WILL NOT RUN. BRAKES WILL (REMAIN) SET. | NO EFFECT. | 3 |
| | CONTACTS (12A27) | NORMALLY CLOSED CONTACTS OPEN TO DE-ENERGIZE RESET INPUT TO TFSA. | a. FAILS OPEN | RESET INPUT TO BFSA WILL NOT BE ENERGIZED. ALTERNATE TP CONTACT (14E27) WILL SHUT DOWN TROLLEY AND SET BRAKES. | NO EFFECT. | 3 |
| | | | a. FAILS CLOSED | RESET INPUT TO TFSA WILL REMAIN ENERGIZED, DIABLING TMCM. TROLLEY WILL NOT RUN. | NO EFFECT. | 3 |
| | CONTACTS (14H19) | HOLDS TP RELAY ENERGIZED WHEN TROLLEY MASTER SWITCH IS MOVED. | a. FAILS OPEN | TP WILL DE-ENERGIZE WHEN MASTER SWITCH IS MOVED TO SELECT TROLLEY DIRECTION AND SPEED. TROLLEY DRIVE WILL NOT RUN AND BRAKES WILL (REMAIN) SET. | NO EFFECT. | 3 |
| | | | a. FAILS CLOSED | TP WILL NOT RE-ENERGIZE AFTER AN OVERLOAD CLEARS UNTIL OVERLOAD SWITCH IS RESET MANUALLY. DOUBLE FAILURE REQUIRED. | NO EFFECT. | 3 |
| | CONTACTS (14E27) | INTERRUPTS POWER TO TBR AND TDE RELAYS WHEN OVERLOAD OCCURS. | a. FAILS OPEN | TBR AND TDE WILL NOT ENERGIZE. TROLLEY WILL NOT RUN AND BRAKES WILL (REMAIN) SET. | NO EFFECT. | 3 |
| | | | a. FAILS CLOSED | POWER TO TBR AND TDE WILL NOT BE INTERRUPTED WHEN AN OVERLOAD OCCURS. INSTANTANEOUS OVERCURRENT CIRCUIT IN TMCM WILL DETECT OVERLOAD CONDITIONS AND SHUTDOWN TROLLEY. | NO EFFECT. | 3 |

Table 15 (Page 11 of 32). **ELECTRICAL FMEA - TROLLEY**

**System** 30-TON BRIDGE CRANE, OPF-3
**Subsystem** TROLLEY
**Drawing No.** EDERER EB-2286 **Sheet No.**
**PMN** H70-1379-01

**Program** SPACE SHUTTLE

**Station Set/Facility Code** GD
**Date** MARCH 1991
**Reference Figure Used** NA
**Prepared By** P. CLUKEY, LSOC 51-22

| FIND NO. PART NO. | PART NAME | PART FUNCTION | a. FAILURE MODE b. CAUSE c. FMN d. DETECTION METHOD e. CORRECTING ACTION f. TIME TO EFFECT g. TIMEFRAME | FAILURE EFFECT ON SYSTEM PERFORMANCE | FAILURE EFFECT ON VEHICLE SYSTEMS AND/OR PERSONNEL SAFETY | CRIT CAT |
|---|---|---|---|---|---|---|
| NONE DS3012N | TROLLEY MASTER SWITCH | | | | | |
| | THUMBSWITCH (14H20) | SWITCH CLOSES TO ENERGIZE TD RELAY. | a. FAILS OPEN | TROLLEY DRIFT RELAY WILL NOT ENERGIZE. TROLLEY WILL STOP NORMALLY. | NO EFFECT. | 3 |
| | | | a. FAILS CLOSED | BRAKES WILL NOT SET. REGENERATIVE BRAKING FROM DRIVE WILL STOP TROLLEY. | NO EFFECT. | 3 |
| | OFF CONTACT (14H21) | ENERGIZES TP RELAY WHEN MASTER SWITCH IS IN THE OFF POSITION. | a. FAILS OPEN | TROLLEY DRIVE WILL NOT RUN. | NO EFFECT. | 3 |
| | | | a. FAILS CLOSED | TP WILL NOT RE-ENERGIZE AFTER AN OVERLOAD CLEARS UNTIL OVERLOAD SWITCH IS RESET MANUALLY. DOUBLE FAILURE REQUIRED. | NO EFFECT. | 3 |
| | EAST CONTACT (14H22) | CLOSES TO ENERGIZE TE, TE1 AND DISABLE TW, TW1. | a. FAILS OPEN | TROLLEY WILL NOT DRIVE EAST WHEN SELECTED BY MASTER SWITCH. | NO EFFECT. | 3 |
| | | | a. FAILS CLOSED | SEE GROUND RULES. | NO EFFECT. | 3 |
| | WEST CONTACT (14H23) | CLOSES TO ENERGIZE TW, TW1 AND DISABLE TE, TE1. | a. FAILS OPEN | TROLLEY WILL NOT DRIVE WEST WHEN SELECTED BY MASTER SWITCH. | NO EFFECT. | 3 |
| | | | a. FAILS CLOSED | SEE GROUND RULES. | NO EFFECT. | 3 |
| | POTENTIOMETER 5KΩ (14H24) | GENERATES VARIABLE VOLTAGE TO CONTROL PROPORTIONAL TROLLEY SPEED. | a. FAILS OPEN | LOSS OF CONTROL VOLTAGE TO TTIM. TROLLEY DRIVE WILL NOT RUN. | NO EFFECT. | 3 |
| | | | a. FAILS SHORT | POSSIBLE DAMAGE TO TPS. LOSS OF +15 VOLTS WILL PREVENT TROLLEY DRIVE FROM RUNNING. | NO EFFECT. | 3 |

Table 15 (Page 12 of 32). **ELECTRICAL FMEA - TROLLEY**

**System** 30-TON BRIDGE CRANE, OPF-3
**Subsystem** TROLLEY
**Drawing No.** EDERER EB-2286 **Sheet No.**
**PMN** H70-1379-01

**Program** SPACE SHUTTLE

**Station Set/Facility Code** GD
**Date** MARCH 1991
**Reference Figure Used** NA
**Prepared By** P. CLUKEY, LSOC 51-22

| FIND NO. PART NO. | PART NAME | PART FUNCTION | a. FAILURE MODE b. CAUSE c. FMN d. DETECTION METHOD e. CORRECTING ACTION f. TIME TO EFFECT g. TIMEFRAME | FAILURE EFFECT ON SYSTEM PERFORMANCE | FAILURE EFFECT ON VEHICLE SYSTEMS AND/OR PERSONNEL SAFETY | CRIT CAT |
|---|---|---|---|---|---|---|
| TD 700-P200A1 | TROLLEY DRIFT RELAY (14S20) | ENERGIZE TBR RELAY TO RELEASE BRAKES. | a. FAILS DEACTIVATED (DE-ENERGIZED POSITION) | THUMBSWITCH ON MASTER SWITCH WILL NOT RELEASE BRAKES. | NO EFFECT. | 3 |
| | CONTACT (14L30) | ENERGIZES TBR RELAY WHEN THUMBSWITCH IS DEPRESSED. | a. FAILS OPEN | THUMBSWITCH ON MASTER SWITCH WILL NOT RELEASE BRAKES. | NO EFFECT. | 3 |
| | | | a. FAILS CLOSED | BRAKES WILL BE RELEASED WHENEVER THE TROLLEY CONTROLS ARE POWERED UP. REGENERATIVE BRAKING WILL STOP TROLLEY WHEN MOTION OCCURS. | NO EFFECT. | 3 |
| | CONTACT (14P29) | ISOLATES TDE RELAY WHEN PREVIOUS CONTACT ENERGIZES TBR RELAY. | a. FAILS OPEN | BRAKES WILL SET WITHOUT NORMAL DELAY WHEN MASTER SWITCH IS RETURNED TO THE OFF POSITION. EXCESSIVE BRAKE WEAR MAY OCCUR. | NO EFFECT. | 3 |
| | | | a. FAILS CLOSED | TDE RELAY WILL BE ENERGIZED WHEN TD ENERGIZES TBR. NO DIRECTION IS COMMANDED AND TROLLEY WILL NOT MOVE. | NO EFFECT. | 3 |
| TE1 8501-RS-24 | TROLLEY EAST 1 RELAY (14S21) | ENERGIZES EAST INPUT LINE TO TTIM WHEN EAST DIRECTION SELECTED. | a. FAILS DEACTIVATED (DE-ENERGIZED POSITION) | TROLLEY DRIVE WILL NOT RUN EAST. | NO EFFECT. | 3 |
| | CONTACT (13M15) | CLOSES TO ENERGIZE EAST INPUT TO TTIM. | a. FAILS OPEN | TROLLEY DRIVE WILL NOT RUN EAST. | NO EFFECT. | 3 |
| | | | a. FAILS CLOSED | TEOS RELAY WILL TRIP MCB WHEN WEST MOTION IS COMMANDED. CRANE WILL SHUT DOWN AND ALL BRAKES WILL SET. | NO EFFECT. | 3 |

Table 15 (Page 13 of 32). **ELECTRICAL FMEA - TROLLEY**

**System** 30-TON BRIDGE CRANE, OPF-3
**Subsystem** TROLLEY
**Drawing No.** EDERER EB-2286 **Sheet No.**
**PMN** H70-1379-01

**Program** SPACE SHUTTLE

**Station Set/Facility Code** GD
**Date** MARCH 1991
**Reference Figure Used** NA
**Prepared By** P. CLUKEY, LSOC 51-22

| FIND NO. PART NO. | PART NAME | PART FUNCTION | a. FAILURE MODE<br>b. CAUSE<br>c. FMN<br>d. DETECTION METHOD<br>e. CORRECTING ACTION<br>f. TIME TO EFFECT<br>g. TIMEFRAME | FAILURE EFFECT ON SYSTEM PERFORMANCE | FAILURE EFFECT ON VEHICLE SYSTEMS AND/OR PERSONNEL SAFETY | CRIT CAT |
|---|---|---|---|---|---|---|
| TE 700-P600A1 | TROLLEY EAST RELAY (14S22) | ENERGIZES WHEN EAST DIRECTION IS SELECTED BY MASTER SWITCH. | a. FAILS DEACTIVATED (DE-ENERGIZED POSITION) | TROLLEY DRIVE WILL NOT RUN EAST. | NO EFFECT. | 3 |
| | CONTACT (14H16) | BYPASSES SLOW WEST LIMIT SWITCH. | a. FAILS OPEN | TROLLEY WILL NOT RUN EAST IN HIGH SPEED RANGE UNLESS SLOW WEST LIMIT IS CLOSED. | NO EFFECT. | 3 |
| | | | a. FAILS CLOSED | TROLLEY MAY RUN WEST IN HIGH SPEED RANGE UNTIL WEST FINAL LIMIT SWITCH PREVENTS FURTHER WEST TRAVEL. OPERATOR CAN STOP TROLLEY MOTION BY CENTERING MASTER SWITCH, PRESSING STOP OR E-STOP. | NO EFFECT. | 3 |
| | CONTACT (14H18) | BYPASSES FINAL WEST LIMIT SWITCH. | a. FAILS OPEN | TROLLEY WILL NOT DRIVE EAST ONCE THE FINAL WEST LIMIT SWITCH IS TRIPPED. | NO EFFECT. | 3 |
| | | | a. FAILS CLOSED | TROLLEY WEST TRAVEL MAY CONTINUE IN SLOW SPEED UNTIL WEST BUMPER STOPS PREVENT FURTHER WEST TROLLEY TRAVEL. OPERATOR CAN STOP TROLLEY MOTION BY CENTERING MASTER SWITCH, PRESSING STOP OR E-STOP. | NO EFFECT. | 3 |
| | CONTACT (14P22) | ENERGIZES TCMD WHEN EAST TROLLEY TRAVEL IS SELECTED WITH MASTER SWITCH. | a. FAILS OPEN | TROLLEY WILL NOT RUN IN EAST DIRECTION. | NO EFFECT. | 3 |
| | | | a. FAILS CLOSED | WHEN WEST IS COMMANDED, TW CONTACT (14Q22) WILL DISABLE TE AND TE1 RELAYS. | NO EFFECT. | 3 |

Table 15 (Page 14 of 32). **ELECTRICAL FMEA - TROLLEY**

**System** 30-TON BRIDGE CRANE, OPF-3
**Subsystem** TROLLEY
**Drawing No.** EDERER EB-2286 **Sheet No.**
**PMN** H70-1379-01

**Program** SPACE SHUTTLE

**Station Set/Facility Code** GD
**Date** MARCH 1991
**Reference Figure Used** NA
**Prepared By** P. CLUKEY, LSOC 51-22

| FIND NO. PART NO. | PART NAME | PART FUNCTION | a. FAILURE MODE b. CAUSE c. FMN d. DETECTION METHOD e. CORRECTING ACTION f. TIME TO EFFECT g. TIMEFRAME | FAILURE EFFECT ON SYSTEM PERFORMANCE | FAILURE EFFECT ON VEHICLE SYSTEMS AND/OR PERSONNEL SAFETY | CRIT CAT |
|---|---|---|---|---|---|---|
| | CONTACT (14Q23) | DISABLES TW, TW1 WHEN EAST DIRECTION IS SELECTED WITH MASTER SWITCH. | a. FAILS OPEN | TROLLEY WILL NOT RUN IN WEST DIRECTION. | NO EFFECT. | 3 |
| | | | a. FAILS CLOSED | TW AND TW1 WILL NOT ENERGIZE UNTIL WEST IS SELECTED WITH MASTER SWITCH. | NO EFFECT. | 3 |
| TCMD 700-PT400A1 | TROLLEY COMMAND RELAY (14S22) | ENERGIZES WHEN A DIRECTION IS COMMANDED BY THE MASTER SWITCH. | a. FAILS DEACTIVATED (DE-ENERGIZED POSITION) | TROLLEY WILL NOT RUN IN EITHER DIRECTION. | NO EFFECT. | 3 |
| | CONTACT (14R26) | ENERGIZES TCMD1 WHEN DIRECTION IS COMMANDED BY THE MASTER SWITCH. | a. FAILS OPEN | TROLLEY MOTOR FIELD WILL REMAIN ECONOMIZED. TROLLEY MAY NOT RUN OR REQUIRE HIGHER THAN NORMAL ARMATURE CURRENT. | NO EFFECT. | 3 |
| | | | a. FAILS CLOSED | TROLLEY MOTOR FIELD WILL NOT ECONOMIZE. OVERTEMP WARNING AND SHUTDOWN WILL PREVENT DAMAGE TO MOTORS. | NO EFFECT. | 3 |
| | CONTACT (14J28) | ENERGIZE TR BEFORE DIRECTION IS COMMANDED BY THE MASTER SWITCH. | a. FAILS OPEN | TR WILL NOT ENERGIZE. TROLLEY WILL NOT RUN. | NO EFFECT. | 3 |
| | | | a. FAILS CLOSED | TR WILL REMAIN ENERGIZED UNTIL TOH OR TRDY TRIPS OFF. | NO EFFECT. | 3 |
| | CONTACT (14L29) | ENERGIZES TBR RELAY. | a. FAILS OPEN | BRAKES WILL NOT RELEASE. TROLLEY WILL NOT MOVE. | NO EFFECT. | 3 |
| | | | a. FAILS CLOSED | TBR WILL BE ENERGIZED, RELEASING BRAKES. REGENERATIVE DRIVE WILL STOP TROLLEY MOTION WHEN COMMANDED. | NO EFFECT. | 3 |

Table 15 (Page 15 of 32). **ELECTRICAL FMEA - TROLLEY**

**System** 30-TON BRIDGE CRANE, OPF-3
**Subsystem** TROLLEY
**Drawing No.** EDERER EB-2286 **Sheet No.**
**PMN** H70-1379-01

**Program** SPACE SHUTTLE

**Station Set/Facility Code** GD
**Date** MARCH 1991
**Reference Figure Used** NA
**Prepared By** P. CLUKEY, LSOC 51-22

| FIND NO. PART NO. | PART NAME | PART FUNCTION | a. FAILURE MODE<br>b. CAUSE<br>c. FMN<br>d. DETECTION METHOD<br>e. CORRECTING ACTION<br>f. TIME TO EFFECT<br>g. TIMEFRAME | FAILURE EFFECT ON SYSTEM PERFORMANCE | FAILURE EFFECT ON VEHICLE SYSTEMS AND/OR PERSONNEL SAFETY | CRIT CAT |
|---|---|---|---|---|---|---|
| | CONTACT (14L30) | ENERGIZES TDE RELAY AND DELAYS THE BRAKE SETTING FOR 2.5 SECONDS. | a. FAILS OPEN | TDE WILL NOT ENERGIZE AND TROLLEY WILL NOT RUN. | NO EFFECT. | 3 |
| | | | a. FAILS CLOSED | TDE WILL REMAIN ENERGIZED WHEN MASTER SWITCH IS RETURNED TO OFF POSITION. BRAKES WILL SET WHEN NEAR ZERO SPEED IS DETECTED. | NO EFFECT. | 3 |
| TW 700-P600A1 | TROLLEY WEST RELAY (14S23) | ENERGIZES WHEN WEST DIRECTION IS SELECTED BY MASTER SWITCH. | a. FAILS DEACTIVATED (DE-ENERGIZED POSITION) | TROLLEY DRIVE WILL NOT RUN WEST. | NO EFFECT. | 3 |
| | CONTACT (14M16) | BYPASSES SLOW EAST LIMIT SWITCH. | a. FAILS OPEN | TROLLEY WILL NOT RUN WEST IN HIGH SPEED RANGE UNLESS SLOW EAST LIMIT SWITCH IS CLOSED. | NO EFFECT. | 3 |
| | | | a. FAILS CLOSED | TROLLEY MAY RUN EAST IN HIGH SPEED RANGE UNTIL EAST FINAL LIMIT SWITCH PREVENTS FURTHER EAST TRAVEL. OPERATOR CAN STOP TROLLEY MOTION BY CENTERING MASTER SWITCH, PRESSING STOP OR E-STOP. | NO EFFECT. | 3 |
| | CONTACT (14M18) | BYPASSES FINAL EAST LIMIT SWITCH. | a. FAILS OPEN | TROLLEY WILL NOT DRIVE WEST ONCE EAST FINAL LIMIT SWITCH IS TRIPPED. | NO EFFECT. | 3 |
| | | | a. FAILS CLOSED | TROLLEY EAST TRAVEL MAY CONTINUE IN SLOW SPEED UNTIL EAST BUMPER STOPS PREVENT FURTHER EAST TROLLEY TRAVEL. OPERATOR CAN STOP TROLLEY MOTION BY CENTERING MASTER SWITCH, PRESSING STOP OR E-STOP. | NO EFFECT. | 3 |

Table 15 (Page 16 of 32). **ELECTRICAL FMEA - TROLLEY**

**System** 30-TON BRIDGE CRANE, OPF-3
**Subsystem** TROLLEY
**Drawing No.** EDERER EB-2286 **Sheet No.**
**PMN** H70-1379-01

**Program** SPACE SHUTTLE

**Station Set/Facility Code** GD
**Date** MARCH 1991
**Reference Figure Used** NA
**Prepared By** P. CLUKEY, LSOC 51-22

| FIND NO. PART NO. | PART NAME | PART FUNCTION | a. FAILURE MODE b. CAUSE c. FMN d. DETECTION METHOD e. CORRECTING ACTION f. TIME TO EFFECT g. TIMEFRAME | FAILURE EFFECT ON SYSTEM PERFORMANCE | FAILURE EFFECT ON VEHICLE SYSTEMS AND/OR PERSONNEL SAFETY | CRIT CAT |
|---|---|---|---|---|---|---|
| | CONTACT (14Q22) | DISABLES TE AND TE1 WHEN WEST DIRECTION IS SELECTED WITH MASTER SWITCH. | a. FAILS OPEN | TROLLEY WILL NOT RUN IN EAST DIRECTION. | NO EFFECT. | 3 |
| | | | a. FAILS CLOSED | TE AND TE1 WILL NOT BE ENERGIZED UNTIL EAST IS SELECTED WITH MASTER SWITCH. | NO EFFECT. | 3 |
| | CONTACT (14P23) | ENERGIZES TCMD WHEN WEST TROLLEY TRAVEL IS SELECTED WITH MASTER SWITCH. | a. FAILS OPEN | TROLLEY WILL NOT RUN IN WEST DIRECTION. | NO EFFECT. | 3 |
| | | | a. FAILS CLOSED | WHEN EAST IS COMMANDED, TE CONTACT (14Q23) WILL DISABLE TW AND TW1 RELAYS. | NO EFFECT. | 3 |
| TW1 8501-RS-24 | TROLLEY WEST 1 RELAY (14S24) | ENERGIZES WHEN WEST DIRECTION IS SELECTED. | a. FAILS DEACTIVATED (DE-ENERGIZED POSITION) | TROLLEY DRIVE WILL NOT RUN WEST. | NO EFFECT. | 3 |
| | CONTACT (13N15) | ENERGIZES WEST INPUT TO TTIM. | a. FAILS OPEN | TROLLEY DRIVE WILL NOT RUN WEST. | NO EFFECT. | 3 |
| | | | a. FAILS CLOSED | TEOS RELAY WILL TRIP MCB WHEN EAST MOTION IS COMMANDED. CRANE WILL SHUT DOWN AND ALL BRAKES WILL SET. | NO EFFECT. | 3 |
| TCMD1 8501-RS-24 | TROLLEY COMMAND 1 RELAY (14S26) | ENERGIZES WHEN TCMD IS ENERGIZED. | a. FAILS DEACTIVATED (DE-ENERGIZED POSITION) | TROLLEY MOTOR FIELD WILL REMAIN IN ECONOMIZE MODE. TROLLEY WILL NOT RUN OR REQUIRE HIGHER THAN NORMAL ARMATURE CURRENTS. | NO EFFECT. | 3 |
| | CONTACT (13M16) | ENERGIZES RUN ENABLE INPUT TO TTIM. | a. FAILS OPEN | TROLLEY MOTOR FIELD WILL REMAIN IN ECONOMIZE MODE. TROLLEY WILL NOT RUN OR REQUIRE HIGHER THAN NORMAL ARMATURE CURRENTS. | NO EFFECT. | 3 |

Table 15 (Page 17 of 32). **ELECTRICAL FMEA - TROLLEY**

**System** 30-TON BRIDGE CRANE, OPF-3
**Subsystem** TROLLEY
**Drawing No.** EDERER EB-2286 **Sheet No.**
**PMN** H70-1379-01

**Program** SPACE SHUTTLE

**Station Set/Facility Code** GD
**Date** MARCH 1991
**Reference Figure Used** NA
**Prepared By** P. CLUKEY, LSOC 51-22

| FIND NO. PART NO. | PART NAME | PART FUNCTION | a. FAILURE MODE b. CAUSE c. FMN d. DETECTION METHOD e. CORRECTING ACTION f. TIME TO EFFECT g. TIMEFRAME | FAILURE EFFECT ON SYSTEM PERFORMANCE | FAILURE EFFECT ON VEHICLE SYSTEMS AND/OR PERSONNEL SAFETY | CRIT CAT |
|---|---|---|---|---|---|---|
| | | | a. FAILS CLOSED | TROLLEY MOTOR FIELD WILL NOT ECONOMIZE. OVERTEMP WARNING AND SHUTDOWN WILL PREVENT DAMAGE TO MOTORS. | NO EFFECT. | 3 |
| TR 700-P200A1 | TROLLEY RUN RELAY (17AS15) | DE-ENERGIZES WHEN TFSA SENSES A FAULT OR FOR OVERHEAT SHUTDOWN. | a. FAILS DEACTIVATED (DE-ENERGIZED POSITION) | TC WILL NOT BE ENERGIZED AND TROLLEY WILL NOT RUN. | NO EFFECT. | 3 |
| | CONTACT (12K24) | CLOSES TO ALLOW TFSA TO ENABLE TMCM. | a. FAILS OPEN | TROLLEY DRIVE WILL NOT RUN. | NO EFFECT. | 3 |
| | | | a. FAILS CLOSED | TDE RELAY WILL PREVENT TMCM FROM BEING ENABLED. | NO EFFECT. | 3 |
| | CONTACT (14F31) | ENERGIZES TC RELAY. | a. FAILS OPEN | TC WILL NOT BE ENERGIZED AND TROLLEY WILL NOT RUN. | NO EFFECT. | 3 |
| | | | a. FAILS CLOSED | TC WILL REMAIN ENERGIZED. OTHER TR CONTACT WILL DISABLE TMCM IF FAULT OCCURS. | NO EFFECT. | 3 |
| | CONTACT (14J27) | ENERGIZES TR RELAY WHEN TCMD CONTACT (14J28) OPENS. | a. FAILS OPEN | TR WILL DE-ENERGIZE WHEN TCMD CONTACT OPENS. TROLLEY CONTROLS WILL DISABLE TMCM AND SET BRAKES. | NO EFFECT. | 3 |
| | | | a. FAILS CLOSED | TR RELAY WILL ENERGIZE WHEN MASTER SWITCH IS NOT OFF. WOULD REQUIRE PREVIOUS FAILURE IN TROLLEY CONTROL CIRCUITRY. | NO EFFECT. | 3 |
| TBR 700-P200A1 | TROLLEY BRAKE RELAY (14S29) | ENERGIZES WHEN A DIRECTION IS COMMANDED OR TROLLEY DRIFT IS COMMANDED. | a. FAILS DEACTIVATED (DE-ENERGIZED POSITION) | BRAKES WILL REMAIN SET, TROLLEY WILL NOT MOVE. | NO EFFECT. | 3 |
| | CONTACT (12J2) | ENERGIZES TRECT TO RELEASE BRAKES. | a. FAILS OPEN | BRAKES WILL REMAIN SET, TROLLEY WILL NOT MOVE. | NO EFFECT. | 3 |

Table 15 (Page 18 of 32). **ELECTRICAL FMEA - TROLLEY**

**System** 30-TON BRIDGE CRANE, OPF-3
**Subsystem** TROLLEY
**Drawing No.** EDERER EB-2286 **Sheet No.**
**PMN** H70-1379-01

**Program** SPACE SHUTTLE

**Station Set/Facility Code** GD
**Date** MARCH 1991
**Reference Figure Used** NA
**Prepared By** P. CLUKEY, LSOC 51-22

| FIND NO. PART NO. | PART NAME | PART FUNCTION | a. FAILURE MODE b. CAUSE c. FMN d. DETECTION METHOD e. CORRECTING ACTION f. TIME TO EFFECT g. TIMEFRAME | FAILURE EFFECT ON SYSTEM PERFORMANCE | FAILURE EFFECT ON VEHICLE SYSTEMS AND/OR PERSONNEL SAFETY | CRIT CAT |
|---|---|---|---|---|---|---|
| | | | a. FAILS CLOSED | OTHER TBR CONTACT WILL DE-ENERGIZE TRECT. | NO EFFECT. | 3 |
| | CONTACT (12K2) | ENERGIZES TRECT TO RELEASE BRAKES. | a. FAILS OPEN | BRAKES WILL REMAIN SET, TROLLEY WILL NOT MOVE. | NO EFFECT. | 3 |
| | | | a. FAILS CLOSED | OTHER TBR CONTACT WILL DE-ENERGIZE TRECT. | NO EFFECT. | 3 |
| TDE 700-P200A1 | TROLLEY DRIVE ENABLE RELAY (14S30) | ENERGIZES WHEN A DIRECTION IS COMMANDED WITH THE MASTER SWITCH. | a. FAILS DEACTIVATED (DE-ENERGIZED POSITION) | TFSA WILL NOT ENABLE TMCM AND TROLLEY WILL NOT RUN. | NO EFFECT. | 3 |
| | CONTACT (12M24) | ALLOWS TFSA TO ENABLE TMCM. | a. FAILS OPEN | TROLLEY DRIVE WILL NOT RUN. | NO EFFECT. | 3 |
| | | | a. FAILS CLOSED | TR CONTACT WILL PREVENT TMCM FROM BEING ENERGIZED. | NO EFFECT. | 3 |
| TC 302AM2OP | TROLLEY LOOP CONTACTOR (14S31) | ENERGIZES WHEN NO FAULTS ARE DETECTED. | a. FAILS DEACTIVATED (DE-ENERGIZED POSITION) | TROLLEY DRIVE WILL NOT RUN. | NO EFFECT. | 3 |
| | CONTACT (12U11) | ALLOWS POWER TO TROLLEY MOTOR. | a. FAILS OPEN | MOTOR WILL NOT RUN, TROLLEY WILL NOT MOVE. | NO EFFECT. | 3 |
| | | | a. FAILS CLOSED | OTHER TC CONTACT (12U13) WILL BREAK CIRCUIT. | NO EFFECT. | 3 |
| | CONTACT (12U13) | ALLOWS POWER TO TROLLEY MOTOR. | a. FAILS OPEN | MOTOR WILL NOT RUN, TROLLEY WILL NOT MOVE. | NO EFFECT. | 3 |
| | | | a. FAILS CLOSED | OTHER TC CONTACT (12U11) WILL BREAK CIRCUIT. | NO EFFECT. | 3 |

Table 15 (Page 19 of 32). **ELECTRICAL FMEA - TROLLEY**

**System** 30-TON BRIDGE CRANE, OPF-3
**Subsystem** TROLLEY
**Drawing No.** EDERER EB-2286 **Sheet No.**
**PMN** H70-1379-01

**Program** SPACE SHUTTLE

**Station Set/Facility Code** GD
**Date** MARCH 1991
**Reference Figure Used** NA
**Prepared By** P. CLUKEY, LSOC 51-22

| FIND NO. PART NO. | PART NAME | PART FUNCTION | a. FAILURE MODE b. CAUSE c. FMN d. DETECTION METHOD e. CORRECTING ACTION f. TIME TO EFFECT g. TIMEFRAME | FAILURE EFFECT ON SYSTEM PERFORMANCE | FAILURE EFFECT ON VEHICLE SYSTEMS AND/OR PERSONNEL SAFETY | CRIT CAT |
|---|---|---|---|---|---|---|
| | CONTACT (12K25) | ENERGIZES INPUT LINE TO TFSA ALLOWING ENABLE OUTPUT TO REACH TMCM. | a. FAILS OPEN | ENABLE SIGNAL WILL NOT REACH TMCM. TROLLEY DRIVE WILL NOT RUN. | NO EFFECT. | 3 |
| | | | a. FAILS CLOSED | TDE WILL DISABLE TMCM WHEN MOVEMENT IS NOT COMMANDED. | NO EFFECT. | 3 |
| | CONTACT (14H29) | ENERGIZES TBR AND TDE RELAYS. | a. FAILS OPEN | TCMD CAN NOT ENERGIZE TBR AND TDE. TROLLEY WILL NOT RUN. | NO EFFECT. | 3 |
| | | | a. FAILS CLOSED | TCMD WILL DE-ENERGIZE TBR AND TDE RELAYS. | NO EFFECT. | 3 |
| TPS DB15-20 | TROLLEY POWER SUPPLY (13C8) | SUPPLY +/-15 VOLTS DC TO TTIM AND MASTER SWITCH. | a. LOW OR NO OUTPUT | TEOS RELAY WILL DE-ENERGIZE CAUSING MCB TO TRIP. CRANE WILL SHUT DOWN. | NO EFFECT. | 3 |
| | | | a. HIGH OUTPUT | SPEED RANGE SELECTED MAY BE UP TO 20% FASTER THAN NORMAL OR FAILURE OF COMPONENTS IN TTIM FROM EXCESSIVE VOLTAGE WILL SHUT DOWN TROLLEY DRIVE. TROLLEY WILL STOP BY CENTERING MASTER SWITCH, PRESSING STOP OR E-STOP. | NO EFFECT. | 3 |
| NONE NONE | CAPACITOR (13L10) | ATTENUATE AC RIPPLE ON +15 VOLT POWER SUPPLY. | a. FAILS OPEN | TTIM CIRCUITRY WILL ATTENUATE AC RIPPLE. | NO EFFECT. | 3 |
| | | | a. FAILS SHORT | LOSS OF +15 VOLT POWER WILL CAUSE TEOS RELAY TO DROP OUT, TRIPPING MCB. CRANE WILL SHUT DOWN AND ALL BRAKES WILL SET. | NO EFFECT. | 3 |
| NONE NONE | CAPACITOR (13N10) | ATTENUATE AC RIPPLE ON -15 VOLT POWER SUPPLY. | a. FAILS OPEN | TTIM CIRCUITRY WILL ATTENUATE AC RIPPLE. | NO EFFECT. | 3 |

Table 15 (Page 20 of 32). **ELECTRICAL FMEA - TROLLEY**

**System** 30-TON BRIDGE CRANE, OPF-3
**Subsystem** TROLLEY
**Drawing No.** EDERER EB-2286 **Sheet No.**
**PMN** H70-1379-01

**Program** SPACE SHUTTLE

**Station Set/Facility Code** GD
**Date** MARCH 1991
**Reference Figure Used** NA
**Prepared By** P. CLUKEY, LSOC 51-22

| FIND NO. PART NO. | PART NAME | PART FUNCTION | a. FAILURE MODE<br>b. CAUSE<br>c. FMN<br>d. DETECTION METHOD<br>e. CORRECTING ACTION<br>f. TIME TO EFFECT<br>g. TIMEFRAME | FAILURE EFFECT ON SYSTEM PERFORMANCE | FAILURE EFFECT ON VEHICLE SYSTEMS AND/OR PERSONNEL SAFETY | CRIT CAT |
|---|---|---|---|---|---|---|
| | | | a. FAILS SHORT | LOSS OF -15 VOLT POWER WILL CAUSE TEOS RELAY TO DROP OUT, TRIPPING MCB. CRANE WILL SHUT DOWN AND ALL BRAKES WILL SET. | NO EFFECT. | 3 |
| TEOS KRPA11-DG24 | TROLLEY ELECTRONIC OVERSPEED RELAY (13N17) | ENERGIZED BY TTIM WHEN OVERSPEED CONDITION DOES NOT EXIST. | a. FAILS DEACTIVATED (DE-ENERGIZED POSITION) | TOSR RELAY WILL NOT BE ENERGIZED WHICH WILL TRIP THE MCB. | NO EFFECT. | 3 |
| | CONTACT (14O7) | ENERGIZES TOSR RELAY. | a. FAILS OPEN | TOSR RELAY WILL NOT BE ENERGIZED WHICH WILL TRIP THE MCB. | NO EFFECT. | 3 |
| | | | a. FAILS CLOSED | TROLLEY OVERSPEED CONDITION WILL NOT SHUT DOWN CRANE. REQUIRES PREVIOUS FAILURE IN TROLLEY MOTOR CONTROL CIRCUIT. | NO EFFECT. | 3 |
| TZS KRPA11-DG24 | TROLLEY ZERO SPEED RELAY (13M17) | ENERGIZES WHEN TROLLEY APPROACHES ZERO SPEED. | a. FAILS DEACTIVATED (DE-ENERGIZED POSITION) | BRAKES WILL NOT SET UNTIL TCMD DELAY TIMES OUT, 2.5 SECONDS AFTER STOP IS COMMANDED. | NO EFFECT. | 3 |
| | CONTACT (14O30) | ENERGIZE TBR WHILE TCMD CONTACT TIMES OUT. | a. FAILS OPEN | TBR WILL DE-ENERGIZE WHEN STOP IS COMMANDED, SETTING THE BRAKES BEFORE TROLLEY SLOWS. EXCESSIVE BRAKE WEAR MAY OCCUR. | NO EFFECT. | 3 |
| | | | a. FAILS CLOSED | BRAKES WILL NOT SET UNTIL TCMD DELAY TIMES OUT, 2.5 SECONDS AFTER STOP IS COMMANDED. | NO EFFECT. | 3 |
| NONE AN-DC50 | TROLLEY TACHOMETER (13F30) | GENERATES VOLTAGE PROPORTIONAL TO SPEED OF TROLLEY MOTOR. | | | | |

Table 15 (Page 21 of 32). **ELECTRICAL FMEA - TROLLEY**

**System** 30-TON BRIDGE CRANE, OPF-3
**Subsystem** TROLLEY
**Drawing No.** EDERER EB-2286 **Sheet No.**
**PMN** H70-1379-01

**Program** SPACE SHUTTLE

**Station Set/Facility Code** GD
**Date** MARCH 1991
**Reference Figure Used** NA
**Prepared By** P. CLUKEY, LSOC 51-22

| FIND NO. PART NO. | PART NAME | PART FUNCTION | a. FAILURE MODE<br>b. CAUSE<br>c. FMN<br>d. DETECTION METHOD<br>e. CORRECTING ACTION<br>f. TIME TO EFFECT<br>g. TIMEFRAME | FAILURE EFFECT ON SYSTEM PERFORMANCE | FAILURE EFFECT ON VEHICLE SYSTEMS AND/OR PERSONNEL SAFETY | CRIT CAT |
|---|---|---|---|---|---|---|
| | | (CRANE 1) | a. LOW OR NO OUTPUT<br>b. OPEN/SHORTED WINDINGS<br>c. 09FY091-007.014<br>d. VISUAL<br>e. NONE<br>f. LESS THAN 1 SECOND<br>g. NA | TROLLEY MOTOR CONTROLLER WILL COMPENSATE FOR THE LOSS OF TACHOMETER FEEDBACK BY INCREASING ARMATURE CURRENT. TROLLEY DRIVE WILL REACH 60-80% OF FULL SPEED BEFORE MOTOR CONTROLLER DETECTS ARMATURE OVERVOLTAGE AND SHUTS DOWN TROLLEY DRIVE. | POSSIBLE DAMAGE TO FLIGHT HARDWARE. CLOSE PROXIMITY TO AN OBSTRUCTION MAY NOT ALLOW SUFFICIENT TIME FOR THE MOTOR CONTROLLER TO DETECT PROBLEM AND SHUTDOWN TROLLEY DRIVE OR FOR THE OPERATOR TO USE E-STOP. | 2 |
| | | | a. HIGH OUTPUT | TROLLEY WILL RUN SLOWER THAN COMMANDED. | NO EFFECT. | 3 |
| | | (CRANE 2) | a. LOW OR NO OUTPUT | SPEED CLIPPING MODULE WILL DETECT DIFFERENCE BETWEEN TACHOMETER FEEDBACK VOLTAGE AND MOTOR ARMATURE VOLTAGE. OVERSPEED RELAY WILL DROP OUT, SHUTTING DOWN CRANE AND SETTING ALL BRAKES. | NO EFFECT. | 3 |
| | | (CRANE 2) | a. HIGH OUTPUT | TROLLEY WILL RUN SLOWER THAN EXPECTED OR SPEED CLIPPING MODULE WILL DETECT DIFFERENCE BETWEEN TACHOMETER FEEDBACK VOLTAGE AND MOTOR ARMATURE VOLTAGE. OVERSPEED RELAY WILL DROP OUT, SHUTTING DOWN CRANE AND SETTING ALL BRAKES. | NO EFFECT. | 3 |
| NONE<br>NONE | RESISTOR<br>90.9KΩ<br>(13F27) | SCALES DOWN TACHOMETER VOLTAGE FOR TTIM. | | | | |

Table 15 (Page 22 of 32). **ELECTRICAL FMEA - TROLLEY**

**System** 30-TON BRIDGE CRANE, OPF-3
**Subsystem** TROLLEY
**Drawing No.** EDERER EB-2286 **Sheet No.**
**PMN** H70-1379-01

**Program** SPACE SHUTTLE

**Station Set/Facility Code** GD
**Date** MARCH 1991
**Reference Figure Used** NA
**Prepared By** P. CLUKEY, LSOC 51-22

| FIND NO. PART NO. | PART NAME | PART FUNCTION | a. FAILURE MODE<br>b. CAUSE<br>c. FMN<br>d. DETECTION METHOD<br>e. CORRECTING ACTION<br>f. TIME TO EFFECT<br>g. TIMEFRAME | FAILURE EFFECT ON SYSTEM PERFORMANCE | FAILURE EFFECT ON VEHICLE SYSTEMS AND/OR PERSONNEL SAFETY | CRIT CAT |
|---|---|---|---|---|---|---|
| | | (CRANE 1) | a. FAILS OPEN<br>b. CORROSION, FATIGUE<br>c. 09FY091-007.015<br>d. VISUAL<br>e. NONE<br>f. LESS THAN 1 SECOND<br>g. NA | TROLLEY MOTOR CONTROLLER WILL COMPENSATE FOR THE LOSS OF TACHOMETER FEEDBACK BY INCREASING ARMATURE CURRENT. TROLLEY DRIVE WILL REACH 60-80% OF FULL SPEED BEFORE MOTOR CONTROLLER DETECTS ARMATURE OVERVOLTAGE AND SHUTS DOWN TROLLEY DRIVE. | POSSIBLE DAMAGE TO FLIGHT HARDWARE. CLOSE PROXIMITY TO AN OBSTRUCTION MAY NOT ALLOW SUFFICIENT TIME FOR THE MOTOR CONTROLLER TO DETECT PROBLEM AND SHUTDOWN TROLLEY DRIVE OR FOR THE OPERATOR TO USE E-STOP. | 2 |
| | | (CRANE 2) | a. FAILS OPEN | SPEED CLIPPING MODULE WILL DETECT DIFFERENCE BETWEEN TACHOMETER FEEDBACK VOLTAGE AND MOTOR ARMATURE VOLTAGE. OVERSPEED RELAY WILL DROP OUT, SHUTTING DOWN CRANE AND SETTING ALL BRAKES. | NO EFFECT. | 3 |
| NONE<br>NONE | RESISTOR 21.0KΩ (13F24) | SCALES DOWN TACHOMETER VOLTAGE FOR TTIM. | a. FAILS OPEN | TROLLEY WILL RUN SLOWER THAN COMMANDED. | NO EFFECT. | 3 |
| TTIM<br>EC-1890 | TROLLEY TRAVEL INTERFACE MODULE (13W9) | PROVIDE SPEED, TACH, AND FIELD COMMANDS TO TMCM. MONITOR TACH FOR OVERSPEED AND ZERO SPEED CONDITIONS. | | | | |
| | J1-3 + SPEED REFERENCE | PROVIDES SPEED COMMAND TO TMCM. | a. NO OUTPUT | TMCM WILL RECEIVE NO SPEED COMMAND. TROLLEY WILL NOT RUN. | NO EFFECT. | 3 |
| | | | a. LOW OUTPUT | TROLLEY WILL RUN SLOWER THAN COMMANDED. | NO EFFECT. | 3 |

Table 15 (Page 23 of 32). **ELECTRICAL FMEA - TROLLEY**

**System** 30-TON BRIDGE CRANE, OPF-3
**Subsystem** TROLLEY
**Drawing No.** EDERER EB-2286 **Sheet No.**
**PMN** H70-1379-01

**Program** SPACE SHUTTLE

**Station Set/Facility Code** GD
**Date** MARCH 1991
**Reference Figure Used** NA
**Prepared By** P. CLUKEY, LSOC 51-22

| FIND NO. PART NO. | PART NAME | PART FUNCTION | a. FAILURE MODE<br>b. CAUSE<br>c. FMN<br>d. DETECTION METHOD<br>e. CORRECTING ACTION<br>f. TIME TO EFFECT<br>g. TIMEFRAME | FAILURE EFFECT ON SYSTEM PERFORMANCE | FAILURE EFFECT ON VEHICLE SYSTEMS AND/OR PERSONNEL SAFETY | CRIT CAT |
|---|---|---|---|---|---|---|
| | | | a. HIGH OUTPUT | TROLLEY MAY WILL NOT DECELERATE UNTIL MASTER SWITCH REACHES NEUTRAL (OFF) POSITION. BRAKES WILL SET AFTER 2.5 SECONDS OR WHEN NEAR ZERO SPEED IS DETECTED, WHICHEVER OCCURS FIRST. SLOW SPEED IN CLOSE PROXIMITY TO AN OBSTRUCTION WILL ALLOW TIME FOR TROLLEY TO STOP. | NO EFFECT. | 3 |
| | J1-6 CONTROL - LER TACH | PROVIDES TACHOMETER FEEDBACK TO TMCM FROM TROLLEY TACHOMETER. | | | | |
| | | (CRANE 1) | a. LOW OR NO OUTPUT<br>b. FAILED COMPONENT<br>c. 09FY091-007.016<br>d. VISUAL<br>e. NONE<br>f. LESS THAN 1 SECOND<br>g. NA | TROLLEY MOTOR CONTROLLER WILL COMPENSATE FOR THE LOSS OF TACHOMETER FEEDBACK BY INCREASING ARMATURE CURRENT. TROLLEY DRIVE WILL REACH 60-80% OF FULL SPEED BEFORE MOTOR CONTROLLER DETECTS ARMATURE OVERVOLTAGE AND SHUTS DOWN TROLLEY DRIVE. | POSSIBLE DAMAGE TO FLIGHT HARDWARE. CLOSE PROXIMITY TO AN OBSTRUCTION MAY NOT ALLOW SUFFICIENT TIME FOR THE MOTOR CONTROLLER TO DETECT PROBLEM AND SHUTDOWN TROLLEY DRIVE OR FOR THE OPERATOR TO USE E-STOP. | 2 |
| | | | a. HIGH OUTPUT | TROLLEY MAY RUN SLOWER THAN COMMANDED. | NO EFFECT. | 3 |
| | | (CRANE 2) | a. LOW OR NO OUTPUT | SPEED CLIPPING MODULE WILL DETECT DIFFERENCE BETWEEN TACHOMETER FEEDBACK VOLTAGE AND MOTOR ARMATURE VOLTAGE. OVERSPEED RELAY WILL DROP OUT, SHUTTING DOWN CRANE AND SETTING ALL BRAKES. | NO EFFECT. | 3 |

Table 15 (Page 24 of 32). **ELECTRICAL FMEA - TROLLEY**

**System** 30-TON BRIDGE CRANE, OPF-3
**Subsystem** TROLLEY
**Drawing No.** EDERER EB-2286 **Sheet No.**
**PMN** H70-1379-01

**Program** SPACE SHUTTLE

**Station Set/Facility Code** GD
**Date** MARCH 1991
**Reference Figure Used** NA
**Prepared By** P. CLUKEY, LSOC 51-22

| FIND NO. PART NO. | PART NAME | PART FUNCTION | a. FAILURE MODE<br>b. CAUSE<br>c. FMN<br>d. DETECTION METHOD<br>e. CORRECTING ACTION<br>f. TIME TO EFFECT<br>g. TIMEFRAME | FAILURE EFFECT ON SYSTEM PERFORMANCE | FAILURE EFFECT ON VEHICLE SYSTEMS AND/OR PERSONNEL SAFETY | CRIT CAT |
|---|---|---|---|---|---|---|
| | | (CRANE 2) | a. HIGH OUTPUT | TROLLEY WILL RUN SLOWER THAN EXPECTED OR SPEED CLIPPING MODULE WILL DETECT DIFFERENCE BETWEEN TACHOMETER FEEDBACK VOLTAGE AND MOTOR ARMATURE VOLTAGE. OVERSPEED RELAY WILL DROP OUT, SHUTTING DOWN CRANE AND SETTING ALL BRAKES. | NO EFFECT. | 3 |
| | J1-8 RATE REF-ERENCE OUTPUT (CRANE #2 ONLY) | PROVIDES RATE REFERENCE OUTPUT TO SCM | a. LOW OR NO OUTPUT | TROLLEY TRAVEL DRIVE WILL RUN SLOWER THAN COMMANDED OR NOT AT ALL. | NO EFFECT. | 3 |
| | | | a. HIGH OUTPUT | TROLLEY DRIVE WILL NOT DECEL-ERATE UNTIL MASTER SWITCH REACHES NEUTRAL (OFF) POSITION. BRAKES WILL SET AFTER 2.5 SECONDS OR WHEN NEAR ZERO SPEED IS DETECTED, WHICHEVER OCCURS FIRST. SLOW SPEED IN CLOSE PROX-IMITY TO AN OBSTRUCTION WILL ALLOW TIME FOR TROLLEY TO STOP. | NO EFFECT. | 3 |
| | J1-10 SLOW SPEED RANGE (CRANE #2 ONLY) | PROVIDES SLOW SPEED RANGE SELECTED SIGNAL TO SPEED CLIPPING MODULE. | a. LOW OR NO OUTPUT | TROLLEY TRAVEL DRIVE SPEED WILL NOT EXCEED SLOW RANGE MAXIMUM SPEED WHEN HIGH RANGE IS SELECTED. | NO EFFECT. | 3 |
| | | | a. HIGH OUTPUT | TROLLEY SLOW TRAVEL DRIVE SPEED WILL NOT BE CLIPPED TO MATCH SLOW RANGE MAXIMUM SPEED OF CRANE #1. | NO EFFECT. | 3 |

Table 15 (Page 25 of 32). **ELECTRICAL FMEA - TROLLEY**

**System** 30-TON BRIDGE CRANE, OPF-3
**Subsystem** TROLLEY
**Drawing No.** EDERER EB-2286 **Sheet No.**
**PMN** H70-1379-01

**Program** SPACE SHUTTLE

**Station Set/Facility Code** GD
**Date** MARCH 1991
**Reference Figure Used** NA
**Prepared By** P. CLUKEY, LSOC 51-22

| FIND NO. PART NO. | PART NAME | PART FUNCTION | a. FAILURE MODE<br>b. CAUSE<br>c. FMN<br>d. DETECTION METHOD<br>e. CORRECTING ACTION<br>f. TIME TO EFFECT<br>g. TIMEFRAME | FAILURE EFFECT ON SYSTEM PERFORMANCE | FAILURE EFFECT ON VEHICLE SYSTEMS AND/OR PERSONNEL SAFETY | CRIT CAT |
|---|---|---|---|---|---|---|
| | J1-1 FIELD REF-ERENCE | PROVIDES NORMAL OR ECON-OMIZE COMMAND TO TMCM. | a. LOW OR NO OUTPUT | TMCM WILL DETECT LOSS OF FIELD CURRENT AND SHUTDOWN TMCM. | NO EFFECT. | 3 |
| | | | a. HIGH OUTPUT | TMCM WILL DETECT EXCESSIVE FIELD CURRENT AND SHUTDOWN TMCM. | NO EFFECT. | 3 |
| | J1-50 CONTACT SUPPLY | SUPPLIES + 15 VOLTS TO RELAY CONTACTS. | a. LOW OR NO OUTPUT | CONTACTS MAY NOT SEND HIGH ENOUGH VOLTAGE TO ENABLE TTIM. TROLLEY MAY NOT RUN. | NO EFFECT. | 3 |
| | | | a. HIGH OUTPUT | CONTACTS WILL SEND HIGH VOLTAGE TO INPUTS OF TTIM. MAY DAMAGE COMPONENTS AND DISABLE TTIM. | NO EFFECT. | 3 |
| | J1-75 OVERSPEED RELAY (HIGH) | PROVIDES + VOLTAGE FOR OVERSPEED RELAY. | a. LOW OR NO OUTPUT | OVERSPEED RELAY WILL NOT ENER-GIZE. TROLLEY WILL NOT POWER UP. | NO EFFECT. | 3 |
| | | | a. CONTINUOUS OUTPUT | OVERSPEED RELAY MAY NOT DE-ENERGIZE WHEN AN OVERSPEED OCCURS. REQUIRES PREVIOUS FAILURE IN TROLLEY CONTROL CIRCU-ITRY. | NO EFFECT. | 3 |
| | J1-29 OVERSPEED RELAY (LOW) | PROVIDES - VOLTAGE FOR OVERSPEED RELAY. | a. LOW OR NO OUTPUT | OVERSPEED RELAY WILL NOT ENER-GIZE. TROLLEY WILL NOT POWER UP. | NO EFFECT. | 3 |
| | | | a. CONTINUOUS OUTPUT | OVERSPEED RELAY MAY NOT DE-ENERGIZE WHEN AN OVERSPEED OCCURS. REQUIRES PREVIOUS FAILURE IN TROLLEY CONTROL CIRCU-ITRY. | NO EFFECT. | 3 |

Table 15 (Page 26 of 32). **ELECTRICAL FMEA - TROLLEY**

**System** 30-TON BRIDGE CRANE, OPF-3
**Subsystem** TROLLEY
**Drawing No.** EDERER EB-2286 **Sheet No.**
**PMN** H70-1379-01

**Program** SPACE SHUTTLE

**Station Set/Facility Code** GD
**Date** MARCH 1991
**Reference Figure Used** NA
**Prepared By** P. CLUKEY, LSOC 51-22

| FIND NO. PART NO. | PART NAME | PART FUNCTION | a. FAILURE MODE<br>b. CAUSE<br>c. FMN<br>d. DETECTION METHOD<br>e. CORRECTING ACTION<br>f. TIME TO EFFECT<br>g. TIMEFRAME | FAILURE EFFECT ON SYSTEM PERFORMANCE | FAILURE EFFECT ON VEHICLE SYSTEMS AND/OR PERSONNEL SAFETY | CRIT CAT |
|---|---|---|---|---|---|---|
| | J1-27 ZERO SPEED RELAY | PROVIDES +24 VOLTS TO ENERGIZE ZERO SPEED RELAY. | a. LOW OR NO OUTPUT | TZS RELAY WILL NOT ENERGIZE. BRAKES WILL NOT SET UNTIL TCMD CONTACT (14L30) TIMES OUT. | NO EFFECT. | 3 |
| | | | a. CONTINUOUS OUTPUT | BRAKES WILL SET WHEN MASTER SWITCH REACHES THE OFF POSITION. MAY CAUSE EXCESSIVE BRAKE WEAR. | NO EFFECT. | 3 |
| SCM EC-2101 (CRANE #2 ONLY) | SPEED CLIPPING MODULE | LIMITS MAGNITUDE OF RATE REFERENCE VOLTAGE FROM TTIM TO TMCM. | | | | |
| | J2 | CLIPPED RATE REFERENCE OUTPUT. | a. LOW OR NO OUTPUT | TROLLEY WILL RUN SLOWER THAN EXPECTED OR NOT AT ALL. | NO EFFECT. | 3 |
| | | | a. HIGH OUTPUT | TROLLEY DRIVE WILL NOT DECELERATE UNTIL MASTER SWITCH REACHES NEUTRAL (OFF) POSITION. BRAKES WILL SET AFTER 2.5 SECONDS OR WHEN NEAR ZERO SPEED IS DETECTED, WHICHEVER OCCURS FIRST. SLOW SPEED IN CLOSE PROXIMITY TO AN OBSTRUCTION WILL ALLOW TIME FOR TROLLEY TO STOP. | NO EFFECT. | 3 |
| MOV NONE | METAL OXIDE VARISTOR (12L3) | PROVIDES OVERVOLTAGE PROTECTION TO BRAKE CIRCUIT. | a. FAILS OPEN | LOSS OF OVERVOLTAGE PROTECTION. REQUIRES FAILURE IN POWER SUPPLY. | NO EFFECT. | 3 |
| | | | a. FAILS SHORT | TRAVEL BRAKE POWER FUSE WILL PROTECT TRAVEL BRAKE TRANSFORMER. | NO EFFECT. | 3 |
| TRECT ED-1600B | TROLLEY RECTIFIER (12N3) | CONVERTS AC TO DC FOR TROLLEY MOTOR BRAKE. | a. FAILS OPEN | BRAKES WILL NOT RELEASE. TROLLEY WILL NOT MOVE. | NO EFFECT. | 3 |

Table 15 (Page 27 of 32). **ELECTRICAL FMEA - TROLLEY**

**System** 30-TON BRIDGE CRANE, OPF-3
**Subsystem** TROLLEY
**Drawing No.** EDERER EB-2286 **Sheet No.**
**PMN** H70-1379-01

**Program** SPACE SHUTTLE

**Station Set/Facility Code** GD
**Date** MARCH 1991
**Reference Figure Used** NA
**Prepared By** P. CLUKEY, LSOC 51-22

| FIND NO. PART NO. | PART NAME | PART FUNCTION | a. FAILURE MODE b. CAUSE c. FMN d. DETECTION METHOD e. CORRECTING ACTION f. TIME TO EFFECT g. TIMEFRAME | FAILURE EFFECT ON SYSTEM PERFORMANCE | FAILURE EFFECT ON VEHICLE SYSTEMS AND/OR PERSONNEL SAFETY | CRIT CAT |
|---|---|---|---|---|---|---|
| | | | a. FAILS SHORT | EXCESSIVE CURRENT WILL CAUSE FUSE PROTECTING TRAVEL BRAKE TRANSFORMER TO BLOW. | NO EFFECT. | 3 |
| NONE NONE | RESISTOR 44Ω (12Q3) | CURRENT LIMITING RESISTOR FOR BRAKE. | a. FAILS OPEN | BRAKE WILL NOT RELEASE. TROLLEY WILL NOT MOVE. | NO EFFECT. | 3 |
| | | | a. FAILS SHORT | BRAKE COIL MAY OVERHEAT AND FAIL, CAUSING BRAKE TO NOT RELEASE. | NO EFFECT. | 3 |
| NONE IC9516-160 | TROLLEY MOTOR BRAKE (12S4) | PROVIDES TORQUE TO SLOW/STOP TROLLEY WHEN BRAKE COIL IS DE-ENERGIZED. | a. FAILS OPEN (COIL) | BRAKE WILL NOT RELEASE. TROLLEY WILL NOT MOVE. | NO EFFECT. | 3 |
| | | | a. FAILS SHORT (COIL) | EXCESSIVE CURRENT WILL CAUSE FUSE PROTECTING TRAVEL BRAKE TRANSFORMER TO BLOW. | NO EFFECT. | 3 |
| TCB TED1340-15WL | TROLLEY CIRCUIT BREAKER 480 V 15 A (12C4) | PROTECTS MAIN POWER LINE FROM OVERLOADS IN TROLLEY DRIVE CIRCUIT. | a. PREMATURE OPERATION | LOSS OF POWER TO TROLLEY DRIVE CIRCUIT. TROLLEY WILL NOT MOVE. | NO EFFECT. | 3 |
| | | | a. FAILURE TO OPERATE | POSSIBLE DAMAGE TO 480 V POWER SUPPLY. REQUIRES PREVIOUS FAILURE IN TROLLEY DRIVE CIRCUIT. | NO EFFECT. | 3 |
| FU35,36,37 FRSR-6 | FUSE (12C7) | PROTECT MAIN POWER LINE FROM OVERLOADS IN TROLLEY DRIVE CIRCUIT. | a. PREMATURE OPERATION | PHASE LOSS WILL BE DETECTED BY TFSA AND SHUT DOWN TMCM. | NO EFFECT | 3 |
| | | | a. FAILS TO OPERATE | TCB WILL PROVIDE PROTECTION | NO EFFECT. | 3 |

Table 15 (Page 28 of 32). **ELECTRICAL FMEA - TROLLEY**

**System** 30-TON BRIDGE CRANE, OPF-3
**Subsystem** TROLLEY
**Drawing No.** EDERER EB-2286 **Sheet No.**
**PMN** H70-1379-01

**Program** SPACE SHUTTLE

**Station Set/Facility Code** GD
**Date** MARCH 1991
**Reference Figure Used** NA
**Prepared By** P. CLUKEY, LSOC 51-22

| FIND NO. PART NO. | PART NAME | PART FUNCTION | a. FAILURE MODE<br>b. CAUSE<br>c. FMN<br>d. DETECTION METHOD<br>e. CORRECTING ACTION<br>f. TIME TO EFFECT<br>g. TIMEFRAME | FAILURE EFFECT ON SYSTEM PERFORMANCE | FAILURE EFFECT ON VEHICLE SYSTEMS AND/OR PERSONNEL SAFETY | CRIT CAT |
|---|---|---|---|---|---|---|
| TDIT NONE | TROLLEY DRIVE ISO-LATION TRANS-FORMER (12C9) | CONVERTS 480 VAC TO 230 VAC FOR TROLLEY DRIVE CIRCUIT. | a. FAILS OPEN | LOSS OF POWER TO TROLLEY DRIVE. TROLLEY WILL NOT RUN. | NO EFFECT. | 3 |
| | | | a. FAILS SHORT | TFSA WILL DETECT VOLTAGE CHANGE AND SHUT DOWN TROLLEY OR EXCES-SIVE CURRENT FLOW WILL TRIP TCB SHUTTING DOWN TROLLEY. | NO EFFECT. | 3 |
| TAM 016-01-CA-ECMT | CAB AMMETER (12W6) | INDICATES MOTOR ARMA-TURE CURRENT IN TROLLEY MOTOR. | a. FAILS OPEN | AMMETER WILL NOT INDICATE CURRENT FLOW IN TROLLEY MOTOR. | NO EFFECT. | 3 |
| | | | a. FAILS CLOSED | AMMETER WILL NOT INDICATE CURRENT FLOW IN TROLLEY MOTOR. | NO EFFECT. | 3 |
| FU21,22 | AMMETER FUSES (12W7) | PROTECT CAB AMMETER FROM OVERCURRENT | a. PREMATURE OPERATION | AMMETER WILL NOT INDICATE CURRENT FLOW IN TROLLEY MOTOR. | NO EFFECT. | 3 |
| | | | a. FAILS TO OPERATE | OPPOSING FUSE WILL PROTECT AMMETER. | NO EFFECT. | 3 |
| TS1 NONE | METER SHUNT FOR TROLLEY AMMETER (12W9) | PROVIDE CIRCUIT FOR MOTOR CURRENT WHILE DIVERTING SOME CURRENT THROUGH AMMETER. | a. FAILS OPEN | TROLLEY MOTOR CURRENT WILL ATTEMPT TO RUN THROUGH AMMETER. FUSE(S) WILL BLOW TO PROTECT AMMETER. | NO EFFECT. | 3 |
| | | | a. FAILS SHORT | MOTOR CURRENT WILL BYPASS AMMETER. NO CURRENT WILL BE INDICATED BY AMMETER. | NO EFFECT. | 3 |
| TOL 593-B0V4 | TROLLEY OVERLOAD RELAY (12V10) | DETECTS EXCESSIVE CURRENT IN TROLLEY MOTOR CIRCUIT. | a. FAILS DEACTIVATED | TAM WILL INDICATE EXCESSIVE CURRENT AND TCB WILL PROVIDE PROTECTION. | NO EFFECT. | 3 |

Table 15 (Page 29 of 32). **ELECTRICAL FMEA - TROLLEY**

**System** 30-TON BRIDGE CRANE, OPF-3
**Subsystem** TROLLEY
**Drawing No.** EDERER EB-2286 **Sheet No.**
**PMN** H70-1379-01

**Program** SPACE SHUTTLE

**Station Set/Facility Code** GD
**Date** MARCH 1991
**Reference Figure Used** NA
**Prepared By** P. CLUKEY, LSOC 51-22

| FIND NO. PART NO. | PART NAME | PART FUNCTION | a. FAILURE MODE<br>b. CAUSE<br>c. FMN<br>d. DETECTION METHOD<br>e. CORRECTING ACTION<br>f. TIME TO EFFECT<br>g. TIMEFRAME | FAILURE EFFECT ON SYSTEM PERFORMANCE | FAILURE EFFECT ON VEHICLE SYSTEMS AND/OR PERSONNEL SAFETY | CRIT CAT |
|---|---|---|---|---|---|---|
| | CONTACT NORMALLY CLOSED (14U18) | OPENS ON TROLLEY MOTOR OVERLOAD TO DE-ENERGIZE TP RELAY. | a. FAILS OPEN | TP RELAY WILL NOT ENERGIZE AND TROLLEY WILL NOT RUN. | NO EFFECT. | 3 |
| | | | a. FAILS CLOSED | TP RELAY WILL NOT SHUT DOWN TROLLEY DRIVE WHEN AN OVERLOAD OCCURS.<br>TAM WILL INDICATE EXCESSIVE CURRENT AND TCB WILL PROVIDE PROTECTION. | NO EFFECT. | 3 |
| NONE<br>219AT | TROLLEY DRIVE MOTOR ARMATURE (12Y11) | PROVIDES TORQUE TO DRIVE TROLLEY. | a. FAILS OPEN | MOTOR WILL NOT SUPPLY TORQUE TO DRIVE TROLLEY. | NO EFFECT | 3 |
| | | | a. FAILS SHORT | OVERCURRENT CIRCUIT IN TCM WILL SHUTDOWN POWER TO DRIVE MOTOR. TFSA MAY ALSO DETECT EXCESSIVE CURRENT AND DISABLE TMCM. | NO EFFECT. | 3 |
| NONE<br>NONE | TROLLEY MOTOR FIELD COILS (12V17) | PROVIDES FIELD FLUX FOR ARMATURE TO WORK AGAINST. | a. FAILS OPEN | MOTOR WILL NOT SUPPLY TORQUE TO DRIVE TROLLEY. | NO EFFECT. | 3 |
| | | | a. FAILS SHORT | FUSES IN TMCM WILL PROTECT TMCM AND WIRING AGAINST SHORT/OVERLOAD. | NO EFFECT | 3 |
| NONE<br>NONE | FAULT RESISTORS 2.5Ω (12F16) | PROVIDE VOLTAGE DROP FOR TFSA. | a. FAILS OPEN | ABSENCE OF VOLTAGE WILL BE DETECTED BY TFSA. TMCM WILL BE SHUT DOWN. | NO EFFECT. | 3 |
| | | | a. FAILS SHORT | ABNORMAL VOLTAGE WILL BE DETECTED BY TFSA. TMCM WILL BE SHUT DOWN. | NO EFFECT. | 3 |

Table 15 (Page 30 of 32). **ELECTRICAL FMEA - TROLLEY**

**System** 30-TON BRIDGE CRANE, OPF-3
**Subsystem** TROLLEY
**Drawing No.** EDERER EB-2286 **Sheet No.**
**PMN** H70-1379-01

**Program** SPACE SHUTTLE

**Station Set/Facility Code** GD
**Date** MARCH 1991
**Reference Figure Used** NA
**Prepared By** P. CLUKEY, LSOC 51-22

| FIND NO. PART NO. | PART NAME | PART FUNCTION | a. FAILURE MODE<br>b. CAUSE<br>c. FMN<br>d. DETECTION METHOD<br>e. CORRECTING ACTION<br>f. TIME TO EFFECT<br>g. TIMEFRAME | FAILURE EFFECT ON SYSTEM PERFORMANCE | FAILURE EFFECT ON VEHICLE SYSTEMS AND/OR PERSONNEL SAFETY | CRIT CAT |
|---|---|---|---|---|---|---|
| TSRA 0003722 | TROLLEY SCALING RESISTOR ASSEMBLY 620KΩ (15E21) | REDUCE VOLTAGE FROM FAULT RESISTORS TO CONFORM TO TFSA CIRCUITRY. | a. FAILS OPEN | ABSENCE OF VOLTAGE WILL BE DETECTED BY TFSA. TMCM WILL BE SHUT DOWN. | NO EFFECT. | 3 |
| | | | a. FAILS SHORT | ABNORMAL VOLTAGE WILL BE DETECTED BY TFSA. TMCM WILL BE SHUT DOWN. | NO EFFECT. | 3 |
| TRDY KRPA11-DG24 | TROLLEY READY RELAY (12C25) | DE-ENERGIZES WHEN TFSA DETECTS A LINE FAULT. | a. FAILS DEACTIVATED (DE-ENERGIZED POSITION) | TR RELAY WILL NOT BE ENERGIZED AND TROLLEY WILL NOT RUN. | NO EFFECT. | 3 |
| | CONTACT (14Q27) | ENERGIZES TR RELAY. | a. FAILS OPEN | TR RELAY WILL NOT BE ENERGIZED AND TROLLEY WILL NOT RUN. | NO EFFECT. | 3 |
| | | | a. FAILS CLOSED | TR RELAY WILL NOT DISABLE TROLLEY CONTROL CIRCUITS. TFSA WILL DISABLE TMCM WHEN LINE FAULT OCCURS. | NO EFFECT. | 3 |
| TFSA 0001802 | TROLLEY FAULT SENSE ASSEMBLY (12F24) | MONITOR TROLLEY MOTOR CURRENT FOR ABNORMAL CONDITIONS. | | | | |
| | J1-6 | PROVIDE GROUND FOR TRDY RELAY. | a. FAILS HIGH | TRDY RELAY WILL NOT ENERGIZE. TROLLEY WILL NOT RUN. | NO EFFECT. | 3 |
| | | | a. FAILS LOW | TRDY WILL REMAIN ENERGIZED IF LINE FAULT OCCURS. TFSA WILL DISABLE TMCM. | NO EFFECT. | 3 |

Table 15 (Page 31 of 32). **ELECTRICAL FMEA - TROLLEY**

**System** 30-TON BRIDGE CRANE, OPF-3
**Subsystem** TROLLEY
**Drawing No.** EDERER EB-2286 **Sheet No.**
**PMN** H70-1379-01

**Program** SPACE SHUTTLE

**Station Set/Facility Code** GD
**Date** MARCH 1991
**Reference Figure Used** NA
**Prepared By** P. CLUKEY, LSOC 51-22

| FIND NO. PART NO. | PART NAME | PART FUNCTION | a. FAILURE MODE<br>b. CAUSE<br>c. FMN<br>d. DETECTION METHOD<br>e. CORRECTING ACTION<br>f. TIME TO EFFECT<br>g. TIMEFRAME | FAILURE EFFECT ON SYSTEM PERFORMANCE | FAILURE EFFECT ON VEHICLE SYSTEMS AND/OR PERSONNEL SAFETY | CRIT CAT |
|---|---|---|---|---|---|---|
| | J2-11 | PROVIDES RESET SIGNAL TO TMCM. | a. FAILS HIGH | RESET SIGNAL WILL NOT REACH TMCM. TP RELAY WILL DE-ENERGIZE TROLLEY CONTROLS AND BRAKES WILL (REMAIN) SET. | NO EFFECT. | 3 |
| | | | a. FAILS LOW | LOW RESET SIGNAL WILL DISABLE TMCM. TROLLEY WILL NOT RUN. | NO EFFECT. | 3 |
| | J2-12 | PROVIDE ENABLE SIGNAL TO TMCM. | a. FAILS HIGH | TFSA WILL NOT ENABLE TMCM. TROLLEY WILL NOT RUN. | NO EFFECT. | 3 |
| | | | a. FAILS LOW | LINE FAULT WILL DE-ENERGIZE TRDY RELAY, SHUTTING DOWN TROLLEY. | NO EFFECT. | 3 |
| TMCM MODEL 842 | TROLLEY MOTOR CONTROL MODULE (12Q19) | PROVIDES AND CONTROLS ARMATURE AND FIELD CURRENTS TO TROLLEY MOTOR. | | | | |
| | J2-3 READY | SENDS TMCM READY SIGNAL TO TFSA. | a. FAILS HIGH | TFSA WILL NOT ENABLE TMCM. TROLLEY WILL NOT RUN. | NO EFFECT. | 3 |
| | | | a. FAILS LOW | TMCM WILL CONTINUOUSLY SEND READY SIGNAL TO TFSA WHEN A FAULT EXISTS. REQUIRES PREVIOUS FAILURE IN TROLLEY CONTROL CIRCUITRY. | NO EFFECT. | 3 |
| | J2-4 +25 VOLT | +25 VOLT SUPPLY LINE TO TFSA | a. LOW OR NO OUTPUT | TRDY RELAY MAY NOT ENERGIZE TROLLEY CONTROLS AND TC CONTACT (12K25) MAY NOT ALLOW TFSA TO ENABLE TMCM. | NO EFFECT. | 3 |
| | | | a. FAILS HIGH | EXCESSIVE VOLTAGE MAY DAMAGE COMPONENTS CAUSING TROLLEY TO NOT RUN. | NO EFFECT. | 3 |

Table 15 (Page 32 of 32). **ELECTRICAL FMEA - TROLLEY**

**System** 30-TON BRIDGE CRANE, OPF-3
**Subsystem** TROLLEY
**Drawing No.** EDERER EB-2286 **Sheet No.**
**PMN** H70-1379-01

**Program** SPACE SHUTTLE

**Station Set/Facility Code** GD
**Date** MARCH 1991
**Reference Figure Used** NA
**Prepared By** P. CLUKEY, LSOC 51-22

| FIND NO. PART NO. | PART NAME | PART FUNCTION | a. FAILURE MODE<br>b. CAUSE<br>c. FMN<br>d. DETECTION METHOD<br>e. CORRECTING ACTION<br>f. TIME TO EFFECT<br>g. TIMEFRAME | FAILURE EFFECT ON SYSTEM PERFORMANCE | FAILURE EFFECT ON VEHICLE SYSTEMS AND/OR PERSONNEL SAFETY | CRIT CAT |
|---|---|---|---|---|---|---|
| | J1-3<br>-15 VOLT | PROVIDES -15 VOLTS TO TFSA CIRCUITRY. | a. HIGH OR NO OUTPUT | TFSA MAY NOT DETECT LINE FAULT AND DISABLE TMCM. REQUIRES DOUBLE FAILURE. | NO EFFECT. | 3 |
| | | | a. LOW OUTPUT | TFSA MAY NOT DETECT LINE FAULT AND DISABLE TMCM. REQUIRES DOUBLE FAILURE. | NO EFFECT. | 3 |
| | J1-4<br>+15 VOLT | PROVIDES +15 VOLTS TO BFSA CIRCUITRY | a. LOW OR NO OUTPUT | LOSS OF POWER TO BFSA CIRCUITRY. BFSA WILL NOT ENABLE BMCM. | NO EFFECT. | 3 |
| | | | a. HIGH OUTPUT | BFSA MAY NOT DETECT LINE FAULT AND DISABLE BMCM. REQUIRES DOUBLE FAILURE. | NO EFFECT. | 3 |
| | F1,F2<br>FIELD<br>SUPPLY | PROVIDES CURRENT FOR TROLLEY MOTOR FIELD COILS. | a. LOW OR NO OUTPUT | TMCM FIELD LOSS CIRCUIT WILL DETECT ABNORMAL OUTPUT AND REMOVE READY INDICATION TO TFSA. | NO EFFECT. | 3 |
| | | | a. HIGH OUTPUT | OUTPUT IS LIMITED BY FIELD OUTPUT CIRCUIT AND TTIM CONTROL SIGNAL. DOUBLE FAILURE REQUIRED. | NO EFFECT. | 3 |
| | A1, A2<br>ARMATURE<br>SUPPLY | PROVIDES ARMATURE CURRENT FOR TROLLEY MOTOR. | a. LOW OR NO OUTPUT | TROLLEY WILL NOT MOVE OR WILL RUN SLUGGISHLY. | NO EFFECT. | 3 |
| | | | a. HIGH OUTPUT | HIGH ARMATURE WILL BE DETECTED BY TFSA, INSTANTANEOUS OVERCURRENT CIRCUIT, OR TOL. TROLLEY WILL BE SHUT DOWN.<br><br>**Note:** ALL INPUTS TO TMCM, TFSA, AND TTIM WERE ANALYZED AS THE RESPECTIVE OUTPUTS OF THE COMPONENTS SUPPLYING THE SIGNALS. | NO EFFECT. | 3 |

Table 16 (Page 1 of 50). **ELECTRICAL FMEA - HOIST**

**System** 30-TON BRIDGE CRANE
**Subsystem** HOIST
**Drawing No.** EDERER EB-2286 **Sheet No.**
**PMN** H70-1379-01

**Program** SPACE SHUTTLE

**Station Set/Facility Code** GD
**Date** MARCH 1991
**Reference Figure Used**
**Prepared By** P. CLUKEY, LSOC 51-22

| FIND NO. PART NO. | PART NAME | PART FUNCTION | a. FAILURE MODE b. CAUSE c. FMN d. DETECTION METHOD e. CORRECTING ACTION f. TIME TO EFFECT g. TIMEFRAME | FAILURE EFFECT ON SYSTEM PERFORMANCE | FAILURE EFFECT ON VEHICLE SYSTEMS AND/OR PERSONNEL SAFETY | CRIT CAT |
|---|---|---|---|---|---|---|
| HCT TA-1-81218 | HOIST CONTROL TRANS-FORMER 1500 VA 480-120 V (8L4) | SUPPLIES 120 VAC POWER TO HOIST CONTROL CIRCUIT. | a. FAILS OPEN | LOSS OF POWER TO HOIST CONTROL CIRCUIT AND TO THE HOIST INTER-FACE MODULE (HIM) AND THE HOIST OVERSPEED MODULE (HOM). HOIST BRAKES WILL SET. | NO EFFECT. | 3 |
| | | | a. FAILS SHORT | LOSS OF POWER TO HOIST CONTROL CIRCUIT AND TO THE HOIST INTER-FACE MODULE (HIM) AND THE HOIST OVERSPEED MODULE (HOM). HOIST BRAKES WILL SET. | NO EFFECT. | 3 |
| FU17 FU18 FU19 FRSR7 FRSR7 FRNR20 | (3) FUSE (8G2, 8G3, 8G6) | PROTECT MAIN LINE AND TRANSFORMER SECONDARY WINDING FROM SHORT/OVERLOAD IN HOIST CONTROL CIRCUIT. | a. PREMATURE OPERATION | LOSS OF POWER TO HOIST CONTROL CIRCUIT AND TO THE HOIST INTER-FACE MODULE (HIM) AND THE HOIST OVERSPEED MODULE (HOM). HOIST BRAKES WILL SET. | | |
| | | | a. FAILS TO OPERATE | ASSOCIATED FUSES WILL PROVIDE OVERLOAD PROTECTION. WOULD REQUIRE A PREVIOUS FAILURE OF A CONTROL CIRCUIT COMPONENT. POS-SIBLE DAMAGE TO UPSTREAM WIRING. | NO EFFECT. | 3 |
| FU20 FNM1/2 | FUSE (8J6) | PROTECTS MAIN LINE POWER AND HCT SECONDARY WINDING FROM SHORT/OVERLOAD IN HOIST POWER SUPPLY. | a. PREMATURE OPERATION | LOSS OF POWER TO HIM AND HOM. HOIST OVERSPEED RELAY WILL DE-ENERGIZE, TRIPPING MCB. CRANE WILL SHUT DOWN AND BRAKES WILL SET. | NO EFFECT. | 3 |
| | | | a. FAILS TO OPERATE | LOSS OF OVERLOAD PROTECTION. REQUIRES PREVIOUS FAILURE IN HOIST POWER SUPPLY CIRCUIT. | NO EFFECT. | 3 |

Table 16 (Page 2 of 50). **ELECTRICAL FMEA - HOIST**

**System** 30-TON BRIDGE CRANE
**Subsystem** HOIST
**Drawing No.** EDERER EB-2286 **Sheet No.**
**PMN** H70-1379-01

**Program** SPACE SHUTTLE

**Station Set/Facility Code** GD
**Date** MARCH 1991
**Reference Figure Used**
**Prepared By** P. CLUKEY, LSOC 51-22

| FIND NO. PART NO. | PART NAME | PART FUNCTION | a. FAILURE MODE b. CAUSE c. FMN d. DETECTION METHOD e. CORRECTING ACTION f. TIME TO EFFECT g. TIMEFRAME | FAILURE EFFECT ON SYSTEM PERFORMANCE | FAILURE EFFECT ON VEHICLE SYSTEMS AND/OR PERSONNEL SAFETY | CRIT CAT |
|---|---|---|---|---|---|---|
| NONE NONE | CONTROL PANEL OUTLET (8S7) | PROVIDES 120 VAC FOR ACCESSORIES IN CONTROL CAB | a. FAILS OPEN | LOSS OF POWER TO ACCESSORY PLUGGED INTO OUTLET. | NO EFFECT. | 3 |
| | | | a. FAILS SHORT | FU19 WILL PROTECT HCT SECONDARY WINDINGS. POWER TO CONTROL CIRCUITRY WILL BE LOST. HOIST WILL SHUT DOWN AND BRAKES WILL SET. | NO EFFECT. | 3 |
| SMPT 1071-1-P-1-B | PROGRAMMABLE CONTROLLER SCAN MONITOR POWER ON TIMER RELAY AND TIME DELAY OPENING CONTACT (8S13, 8P14) | OPENS THE NORMALLY CLOSED ONE SECOND TIME DELAY OPENING SWITCH. | a. FAILS DEACTIVATED (DE-ENERGIZED) | SMPT SWITCH WILL NOT OPEN. SCAN MONITOR CIRCUIT REMAINS ENERGIZED CONTINUOUSLY WHEN HOIST CONTROL CIRCUIT IS ENERGIZED. HOIST FUNCTIONS NORMALLY. SCAN MONITOR WILL NOT LOCK OUT THE HOIST. | NO EFFECT. | 3 |
| | CONTACT (8Q14) | ALLOWS SM RELAY TO ENERGIZE AND HOLD ON. | a. FAILS OPEN (NORMALLY CLOSED ONE SECOND TIME DELAY OPENING CONTACT) | SCAN MONITOR RELAY WILL NOT ENERGIZE, PREVENTING HOIST OPERATION. BRAKES WILL (REMAIN) SET. | NO EFFECT. | 3 |
| | | | a. FAILS CLOSED (NORMALLY CLOSED ONE SECOND TIME DELAY OPENING CONTACT) | SCAN MONITOR WILL NOT LOCK OUT HOIST. IF SCAN MONITOR IS RE-ENERGIZED, THE HOIST WOULD BE ALLOWED TO RUN. | NO EFFECT. | 3 |

Table 16 (Page 3 of 50). **ELECTRICAL FMEA - HOIST**

**System** 30-TON BRIDGE CRANE
**Subsystem** HOIST
**Drawing No.** EDERER EB-2286 **Sheet No.**
**PMN** H70-1379-01

**Program** SPACE SHUTTLE

**Station Set/Facility Code** GD
**Date** MARCH 1991
**Reference Figure Used**
**Prepared By** P. CLUKEY, LSOC 51-22

| FIND NO. PART NO. | PART NAME | PART FUNCTION | a. FAILURE MODE b. CAUSE c. FMN d. DETECTION METHOD e. CORRECTING ACTION f. TIME TO EFFECT g. TIMEFRAME | FAILURE EFFECT ON SYSTEM PERFORMANCE | FAILURE EFFECT ON VEHICLE SYSTEMS AND/OR PERSONNEL SAFETY | CRIT CAT |
|---|---|---|---|---|---|---|
| FU38 FNM1/2 | FUSE (8K11) | PROTECT HOIST CONTROL CIRCUIT FROM SHORT/OVERLOAD IN SCAN MONITOR CIRCUIT. | a. PREMATURE OPERATION | LOSS OF POWER TO SCAN MONITOR CIRCUIT. SCAN MONITOR RELAY (SM) WILL NOT ENERGIZE FOR INITIAL CRANE START UP. IF CRANE IS IN OPERATION, SCAN MONITOR RELAY WILL DE-ENERGIZE, STOPPING HOIST OPERATIONS. HOIST BRAKES WILL SET. | NO EFFECT. | 3 |
| | | | a. FAILS TO OPERATE | LOSS OF CURRENT OVERLOAD PROTECTION. WOULD REQUIRE A PREVIOUS FAILURE OF A SCAN MONITOR CIRCUIT COMPONENT. POSSIBLE DAMAGE TO UPSTREAM WIRING. | NO EFFECT. | 3 |
| SMPS 24EB10 | SCAN MONITOR POWER SUPPLY (8E13) | CONVERTS AC POWER TO DC POWER AND SUPPLIES THAT DC POWER TO THE SM RELAY AND UPPER REST SLOT 24. | a. FAILS LOW OR NO OUTPUT | SM RELAY WILL NOT ENERGIZE. CRANE CONTROLS WILL NOT ENERGIZE AND BRAKES WILL (REMAIN) SET. | NO EFFECT. | 3 |
| | | | a. HIGH OUTPUT | EXCESSIVE VOLTAGE MAY DAMAGE SM RELAY CAUSING HOIST CONTROLS TO DE-ENERGIZE AND BRAKES TO (REMAIN) SET. | NO EFFECT. | 3 |
| SM KRPA11-DG24 | SCAN MONITOR RELAY (8S13, 8P13, 8C14) | WHEN ENERGIZED IT CLOSES 1) HOLDING CONTACT TO SUSTAIN A COMPLETE LOWER NEST SLOT 16 CIRCUIT AND 2) CONTACT TO COMPLETE HOIST CONTROL POWER CIRCUIT. | a. FAILS DEACTIVATED (DE-ENERGIZED POSITION) | LOSS OF POWER TO HOIST CONTROL CIRCUIT. CRANE WILL NOT START UP FOR INITIAL OPERATION. IF THE CRANE IS IN OPERATION, POWER WILL BE LOST AND ALL BRAKES WILL SET. | NO EFFECT. | 3 |
| | CONTACT (8P13) | HOLDS SM RELAY ENERGIZED. | a. FAILS OPEN | LOSS OF POWER TO HOIST CONTROL CIRCUIT. CONTROL CIRCUIT WILL SHUTDOWN HOIST OPERATIONS. ALL BRAKES WILL SET. | NO EFFECT. | 3 |

Table 16 (Page 4 of 50). **ELECTRICAL FMEA - HOIST**

**System** 30-TON BRIDGE CRANE
**Subsystem** HOIST
**Drawing No.** EDERER EB-2286 **Sheet No.**
**PMN** H70-1379-01

**Program** SPACE SHUTTLE

**Station Set/Facility Code** GD
**Date** MARCH 1991
**Reference Figure Used**
**Prepared By** P. CLUKEY, LSOC 51-22

| FIND NO. PART NO. | PART NAME | PART FUNCTION | a. FAILURE MODE b. CAUSE c. FMN d. DETECTION METHOD e. CORRECTING ACTION f. TIME TO EFFECT g. TIMEFRAME | FAILURE EFFECT ON SYSTEM PERFORMANCE | FAILURE EFFECT ON VEHICLE SYSTEMS AND/OR PERSONNEL SAFETY | CRIT CAT |
|---|---|---|---|---|---|---|
| | | | a. FAILS CLOSED | SCAN MONITOR WILL NOT LOCK OUT HOIST. IF SCAN MONITOR IS RE-ENERGIZED, THE HOIST WOULD BE ALLOWED TO RUN. | NO EFFECT. | 3 |
| | CONTACT (8C14) | ALLOWS POWER TO REACH HOIST CONTROL CIRCUIT. | a. FAILS OPEN | LOSS OF POWER TO HOIST CONTROL POWER CIRCUIT. HOIST WILL STOP OPERATION AND HOIST BRAKES WILL (REMAIN) SET. | NO EFFECT. | 3 |
| | | | a. FAILS CLOSED | SCAN MONITOR WILL NOT SHUT DOWN HOIST CONTROL POWER. HOIST WILL APPEAR TO FUNCTION NORMALLY. HOISTING MAY BE STOPPED WITH NORTH AND SOUTH DISABLING SWITCHES SW3 AND SW4, STOP SWITCH OR EMERGENCY STOP SWITCH AND WILL SET HOIST BRAKES. WHEN IN NEUTRAL, THE HOIST MASTER SWITCH PREVENTS RAISING/LOWERING. | NO EFFECT. | 3 |
| NONE 1N4004 | DIODE (8T13) | SUPPRESSES CURRENT SPIKES DUE TO DE-ENERGIZING THE SCAN MONITOR (SM) RELAY. | a. FAILS OPEN | SM SERIES CONTACTS AND/OR SCAN MONITOR BOARD MAY BE DAMAGED BY THE SPIKES. COULD SHUT DOWN HOIST OR LOSE SCAN MONITOR PROTECTION. | NO EFFECT. | 3 |
| | | | a. FAILS SHORT | RELAY SM WILL DROP OUT OR NOT ENERGIZE. HOIST CONTROLS WILL DROP OUT OR REMAIN INACTIVE. | NO EFFECT. | 3 |
| SW3 NONE | HOIST NORTH DRIVE SWITCH (8G17) | USED TO SELECT IN SERVICE OR DISABLED MODE OF HOIST NORTH DRIVE REQUESTED (HNDR) RELAY. | a. FAILS OPEN | HOIST NORTH DRIVE WILL REMAIN DISABLED. HOIST WILL RUN ON SOUTH MOTOR ONLY. | NO EFFECT. | 3 |

Table 16 (Page 5 of 50). **ELECTRICAL FMEA - HOIST**

**System** 30-TON BRIDGE CRANE
**Subsystem** HOIST
**Drawing No.** EDERER EB-2286 **Sheet No.**
**PMN** H70-1379-01

**Program** SPACE SHUTTLE

**Station Set/Facility Code** GD
**Date** MARCH 1991
**Reference Figure Used**
**Prepared By** P. CLUKEY, LSOC 51-22

| FIND NO. PART NO. | PART NAME | PART FUNCTION | a. FAILURE MODE b. CAUSE c. FMN d. DETECTION METHOD e. CORRECTING ACTION f. TIME TO EFFECT g. TIMEFRAME | FAILURE EFFECT ON SYSTEM PERFORMANCE | FAILURE EFFECT ON VEHICLE SYSTEMS AND/OR PERSONNEL SAFETY | CRIT CAT |
|---|---|---|---|---|---|---|
| | | | a. FAILS CLOSED | HOIST NORTH DRIVE WILL REMAIN IN SERVICE. FAILURE IN NORTH DRIVE REQUIRED TO DISABLE HOIST. | NO EFFECT. | 3 |
| SW4 NONE | HOIST SOUTH DRIVE SWITCH (8G20) | USED TO SELECT IN SERVICE OR DISABLED MODE OF HOIST SOUTH DRIVE REQUESTED (HSDR) RELAY. | a. FAILS OPEN | HOIST SOUTH DRIVE WILL REMAIN DISABLED. HOIST WILL RUN ON NORTH MOTOR ONLY. | NO EFFECT. | 3 |
| | | | a. FAILS CLOSED | HOIST SOUTH DRIVE WILL REMAIN IN SERVICE. FAILURE IN SOUTH DRIVE REQUIRED TO DISABLE HOIST. | NO EFFECT. | 3 |
| HNDR 700-P200A1 | HOIST NORTH DRIVE REQUESTED RELAY (8T17) | ENERGIZES WHEN SW3 CLOSES TO ENABLE NORTH DRIVE. | a. FAILS DEACTIVATED (DE-ENERGIZED POSITION) | RELAY HNBS NOT ACTIVATED. HOIST NORTH BLOWER MOTOR WILL NOT OPERATE. HOIST NORTH DRIVE READY BRANCH WILL NOT BE COMPLETED AND NORTH HOIST MOTOR WILL NOT OPERATE. | NO EFFECT. | 3 |
| | CONTACT (8F25) | ENERGIZES HNBS RELAY. | a. FAILS OPEN | RELAY HNBS NOT ACTIVATED. HOIST NORTH BLOWER MOTOR WILL NOT OPERATE. HOIST NORTH DRIVE READY BRANCH WILL NOT BE COMPLETED AND NORTH HOIST MOTOR WILL NOT OPERATE. | NO EFFECT. | 3 |
| | | | a. FAILS CLOSED | RELAY HNBS REMAINS ACTIVATED. HOIST NORTH BLOWER MOTOR WILL CONTINUE TO RUN WHEN NORTH DRIVE IS DISABLED. MOTOR MAY BE TURNED OFF BY HITTING THE STOP SWITCH OR THE E-STOP SWITCH. | NO EFFECT. | 3 |
| | CONTACT (4L24) | CLOSES TO SEND HOIST NORTH DRIVE ENABLE SIGNAL TO HIM AND HOM. | a. FAILS OPEN | HOIST NORTH DRIVE WILL FUNCTION NORMALLY. HIM AND HOM WILL MONITOR SOUTH DRIVE SIGNALS WHEN BOTH DRIVES ARE OPERATING. | NO EFFECT. | 3 |

Table 16 (Page 6 of 50). **ELECTRICAL FMEA - HOIST**

**System** 30-TON BRIDGE CRANE
**Subsystem** HOIST
**Drawing No.** EDERER EB-2286 **Sheet No.**
**PMN** H70-1379-01

**Program** SPACE SHUTTLE

**Station Set/Facility Code** GD
**Date** MARCH 1991
**Reference Figure Used**
**Prepared By** P. CLUKEY, LSOC 51-22

| FIND NO. PART NO. | PART NAME | PART FUNCTION | a. FAILURE MODE b. CAUSE c. FMN d. DETECTION METHOD e. CORRECTING ACTION f. TIME TO EFFECT g. TIMEFRAME | FAILURE EFFECT ON SYSTEM PERFORMANCE | FAILURE EFFECT ON VEHICLE SYSTEMS AND/OR PERSONNEL SAFETY | CRIT CAT |
|---|---|---|---|---|---|---|
| | | | a. FAILS CLOSED | HNR CONTACTS WILL PREVENT HOIST NORTH ENABLE SIGNAL FROM REACHING HIM, HOM AND HNMCM. NORTH DRIVE WILL BE DISABLED. | NO EFFECT. | 3 |
| HSDR 700-P200A1 | HOIST SOUTH DRIVE REQUESTED RELAY (8T20) | ENERGIZES WHEN SW4 CLOSES TO ENABLE SOUTH DRIVE. | a. FAILS DEACTIVATED (DE-ENERGIZED POSITION) | RELAY HSBS NOT ACTIVATED. HOIST SOUTH BLOWER MOTOR WILL NOT OPERATE. HOIST SOUTH DRIVE READY BRANCH WILL NOT BE COMPLETED AND SOUTH HOIST MOTOR WILL NOT OPERATE. | NO EFFECT. | 3 |
| | CONTACT (8F26) | ENERGIZES HSBS RELAY. | a. FAILS OPEN | RELAY HSBS NOT ACTIVATED. HOIST SOUTH BLOWER MOTOR WILL NOT OPERATE. HOIST SOUTH DRIVE READY BRANCH WILL NOT BE COMPLETED AND SOUTH HOIST MOTOR WILL NOT OPERATE. | NO EFFECT. | 3 |
| | | | a. FAILS CLOSED | RELAY HSBS REMAINS ACTIVATED. HOIST SOUTH BLOWER MOTOR WILL CONTINUE TO RUN WHEN SOUTH DRIVE IS DISABLED. MOTOR MAY BE TURNED OFF BY HITTING THE STOP SWITCH OR THE E-STOP SWITCH. | NO EFFECT. | 3 |
| | CONTACT (5K24) | CLOSES TO SEND HOIST SOUTH DRIVE ENABLE SIGNAL TO HIM AND HOM. | a. FAILS OPEN | HOIST SOUTH DRIVE WILL FUNCTION NORMALLY. HIM AND HOM WILL MONITOR NORTH DRIVE SIGNALS WITH BOTH DRIVES OPERATING. | NO EFFECT. | 3 |
| | | | a. FAILS CLOSED | HSR CONTACTS WILL PREVENT HOIST SOUTH ENABLE SIGNAL FROM REACHING HIM, HOM AND HSMCM. SOUTH DRIVE WILL BE DISABLED. | NO EFFECT. | 3 |

Table 16 (Page 7 of 50). **ELECTRICAL FMEA - HOIST**

**System** 30-TON BRIDGE CRANE
**Subsystem** HOIST
**Drawing No.** EDERER EB-2286 **Sheet No.**
**PMN** H70-1379-01

**Program** SPACE SHUTTLE

**Station Set/Facility Code** GD
**Date** MARCH 1991
**Reference Figure Used**
**Prepared By** P. CLUKEY, LSOC 51-22

| FIND NO. PART NO. | PART NAME | PART FUNCTION | a. FAILURE MODE<br>b. CAUSE<br>c. FMN<br>d. DETECTION METHOD<br>e. CORRECTING ACTION<br>f. TIME TO EFFECT<br>g. TIMEFRAME | FAILURE EFFECT ON SYSTEM PERFORMANCE | FAILURE EFFECT ON VEHICLE SYSTEMS AND/OR PERSONNEL SAFETY | CRIT CAT |
|---|---|---|---|---|---|---|
| SPEED RANGE 9001-KS-11B | SPEED RANGE SELECTOR SWITCH (8H22) | USED TO SELECT SLOW OR FAST SPEED RANGE. | a. FAILS OPEN | HOIST WILL RUN IN SLOW SPEED RANGE REGARDLESS OF RANGE SELECTED. | NO EFFECT. | 3 |
| | **NOTE:** DOES NOT COMPLY WITH NSS/GO-1740.9 REQUIREMENTS WITH REGARD TO OPERATION AT HIGHER SPEEDS THAN SELECTED. | | a. FAILS CLOSED<br>b. STUCK/WELDED CONTACTS<br>c. NA<br>d. VISUAL<br>e. RETURN MASTER SWITCH TO OFF POSITION OR USE E-STOP<br>f. 15 SECONDS (MIN)<br>g. 3 SECONDS | HOIST WILL REMAIN IN HIGH SPEED RANGE. | NO EFFECT. THERE IS SUFFICIENT TIME FOR THE OPERATOR TO REACT. SEE SECTION 2.2.a. | 3 |
| FSR NONE | FULL SPEED RELAY (8T23) | ENERGIZES WHEN FAST SPEED RANGE IS SELECTED. | a. FAILS DEACTIVATED (DE-ENERGIZED POSITION) | HOIST WILL RUN IN SLOW SPEED RANGE REGARDLESS OF RANGE SELECTED. | NO EFFECT. | 3 |
| | CONTACT (7S13) | CLOSES TO SEND HIGH SPEED RANGE SIGNAL FROM PIC TO HIM, HOM AND PIC SELF CHECK. | a. FAILS OPEN | FAILURE OF PIC SELF CHECK WILL SHUTDOWN MOTORS AND SET BRAKES. | NO EFFECT. | 3 |
| | | | a. FAILS CLOSED | PIC ANALOG SELF CHECK WILL MONITOR HIGH SPEED RANGE SIGNAL FOR ERRORS. | NO EFFECT. | 3 |
| HNBS 509-A0D7 | HOIST NORTH BLOWER STARTER RELAY (8P25) | ENERGIZES WHEN HOIST NORTH DRIVE IS REQUESTED. | a. FAILS DEACTIVATED (DE-ENERGIZED POSITION) | HOIST NORTH BLOWER MOTOR WILL NOT OPERATE. HOIST NORTH DRIVE READY BRANCH WILL NOT BE COMPLETED AND PREVENT NORTH HOIST MOTOR FROM OPERATING AND HOIST BRAKES WILL (REMAIN) SET. | NO EFFECT. | 3 |

Table 16 (Page 8 of 50). **ELECTRICAL FMEA - HOIST**

**System** 30-TON BRIDGE CRANE
**Subsystem** HOIST
**Drawing No.** EDERER EB-2286 **Sheet No.**
**PMN** H70-1379-01

**Program** SPACE SHUTTLE

**Station Set/Facility Code** GD
**Date** MARCH 1991
**Reference Figure Used**
**Prepared By** P. CLUKEY, LSOC 51-22

| FIND NO. PART NO. | PART NAME | PART FUNCTION | a. FAILURE MODE b. CAUSE c. FMN d. DETECTION METHOD e. CORRECTING ACTION f. TIME TO EFFECT g. TIMEFRAME | FAILURE EFFECT ON SYSTEM PERFORMANCE | FAILURE EFFECT ON VEHICLE SYSTEMS AND/OR PERSONNEL SAFETY | CRIT CAT |
|---|---|---|---|---|---|---|
| | CONTACT (9F8) | CLOSES TO ENERGIZE HNR RELAY. | a. FAILS OPEN | HOIST NORTH DRIVE READY BRANCH WILL NOT BE COMPLETED AND PREVENT NORTH HOIST DRIVE MOTOR FROM OPERATING AND HOIST BRAKES WILL BE APPLIED. | NO EFFECT. | 3 |
| | | | a. FAILS CLOSED | PIC OUTPUT WILL NOT ENERGIZE HNR BRANCH. | NO EFFECT. | 3 |
| | CONTACT (4F8) | CLOSES TO SUPPLY POWER TO HOIST NORTH BLOWER MOTOR. | a. FAILS OPEN (ONLY ONE CONTACT ON ANY OF THE THREE WIRES TO THE NORTH HOIST BLOWER MOTOR). | HOIST NORTH BLOWER WILL ATTEMPT TO RUN. HNBOL OVERLOADS WILL OPEN WHEN BLOWER MOTOR GETS HOT. NORTH HOIST MOTOR WILL SHUT DOWN. | NO EFFECT. | 3 |
| | | | a. FAILS CLOSED (ONE CONTACT ON ANY OF THE THREE WIRES TO THE NORTH HOIST BLOWER MOTOR). | NO FAILURE EFFECT ON SYSTEM PERFORMANCE. | NO EFFECT. | 3 |
| HSBS 509-A0D7 | HOIST SOUTH BLOWER STARTER RELAY (8P27) | ENERGIZES WHEN HOIST SOUTH DRIVE IS REQUESTED. | a. FAILS DEACTIVATED (DE-ENERGIZED POSITIONED) | HOIST SOUTH BLOWER MOTOR WILL NOT OPERATE. HOIST SOUTH DRIVE READY BRANCH WILL NOT BE COMPLETED AND PREVENT SOUTH HOIST MOTOR FROM OPERATING AND HOIST BRAKES WILL BE APPLIED. | NO EFFECT. | 3 |
| | CONTACT (9F9) | CLOSES TO ENERGIZE HSR RELAY. | a. FAILS OPEN | HOIST SOUTH DRIVE READY BRANCH WILL NOT BE COMPLETED AND PREVENT SOUTH HOIST DRIVE MOTOR FROM OPERATING AND HOIST BRAKES WILL BE APPLIED. | NO EFFECT. | 3 |
| | | | a. FAILS CLOSED | PIC OUTPUT WILL NOT ENERGIZE HSR BRANCH. | NO EFFECT. | 3 |

Table 16 (Page 9 of 50). **ELECTRICAL FMEA - HOIST**

**System** 30-TON BRIDGE CRANE
**Subsystem** HOIST
**Drawing No.** EDERER EB-2286 **Sheet No.**
**PMN** H70-1379-01

**Program** SPACE SHUTTLE

**Station Set/Facility Code** GD
**Date** MARCH 1991
**Reference Figure Used**
**Prepared By** P. CLUKEY, LSOC 51-22

| FIND NO. PART NO. | PART NAME | PART FUNCTION | a. FAILURE MODE b. CAUSE c. FMN d. DETECTION METHOD e. CORRECTING ACTION f. TIME TO EFFECT g. TIMEFRAME | FAILURE EFFECT ON SYSTEM PERFORMANCE | FAILURE EFFECT ON VEHICLE SYSTEMS AND/OR PERSONNEL SAFETY | CRIT CAT |
|---|---|---|---|---|---|---|
| | CONTACT (5F8) | CLOSES TO SUPPLY POWER TO HOIST SOUTH BLOWER MOTOR. | a. FAILS OPEN (ONLY ONE CONTACT ON ANY OF THREE WIRES TO THE SOUTH HOIST BLOWER MOTOR). | HOIST SOUTH BLOWER WILL ATTEMPT TO RUN. HSBOL OVERLOADS WILL OPEN WHEN BLOWER MOTOR GETS HOT. THIS WILL SHUT DOWN SOUTH HOIST. | NO EFFECT. | 3 |
| | | | a. FAILS CLOSED (ONE CONTACT ON ANY OF THE THREE WIRES TO THE SOUTH HOIST BLOWER MOTOR). | NO EFFECT ON SYSTEM PERFORMANCE. | NO EFFECT. | 3 |
| NONE 9002-AW-17 | FLOAT MODE FOOT SWITCH (8AD14) | WHEN CLOSED, IT COMPLETES THE FLOAT MODE AND FLOAT MODE BRAKE RELEASE BRANCHES OF THE HOIST CONTROL. | a. FAILS OPEN | FLOAT MODE AND FLOAT MODE BRAKE RELEASE WILL NOT OCCUR SINCE THE SENSOR FOR THE PROGRAMMABLE INDUSTRIAL COMPUTER WILL RECEIVE NO SIGNAL. HOIST WILL NOT OPERATE IN FLOAT MODE. | NO EFFECT. | 3 |
| | | | a. FAILS CLOSED | HOIST WILL OPERATE IN FLOAT MODE ONLY. | NO EFFECT. | 3 |
| FM 700-P600A1 | FLOAT MODE RELAY (8AT14) | ENABLES FLOAT MODE IN HOIST CONTROL AND CONFIGURES THE CONTROL CIRCUIT TO ALLOW THE OPERATOR TO BACK THE HOIST OUT OF EITHER LIMIT SWITCH. | a. FAILS DEACTIVATED (DE-ENERGIZED POSITION) | FLOAT MODE WILL NOT BE ENABLED, SLOW AND FAST HOIST SPEEDS ONLY WILL BE AVAILABLE. | NO EFFECT. | 3 |
| | CONTACT (9F6) | CONFIGURES HOIST CONTROL CIRCUIT TO ALLOW THE OPERATOR TO BACK THE HOIST OUT OF EITHER LIMIT SWITCH. | a. FAILS OPEN | NOT POSSIBLE TO BACK OUT OF ROTARY LIMIT SWITCHES WITH HOIST MASTER SWITCH. THE CRANE WOULD FUNCTION NORMALLY IN THE FLOAT MODE. | NO EFFECT. | 3 |

Table 16 (Page 10 of 50). **ELECTRICAL FMEA - HOIST**

**System** 30-TON BRIDGE CRANE
**Subsystem** HOIST
**Drawing No.** EDERER EB-2286 **Sheet No.**
**PMN** H70-1379-01

**Program** SPACE SHUTTLE

**Station Set/Facility Code** GD
**Date** MARCH 1991
**Reference Figure Used**
**Prepared By** P. CLUKEY, LSOC 51-22

| FIND NO. PART NO. | PART NAME | PART FUNCTION | a. FAILURE MODE b. CAUSE c. FMN d. DETECTION METHOD e. CORRECTING ACTION f. TIME TO EFFECT g. TIMEFRAME | FAILURE EFFECT ON SYSTEM PERFORMANCE | FAILURE EFFECT ON VEHICLE SYSTEMS AND/OR PERSONNEL SAFETY | CRIT CAT |
|---|---|---|---|---|---|---|
| | | | a. FAILS CLOSED | FAST AND SLOW SPEED FROM THE HOIST MASTER SWITCH WOULD OPERATE NORMALLY AND WOULD ALLOW THE OPERATOR TO BACK THE HOIST OUT OF EITHER LIMIT SWITCH. FLOAT MODE WOULD WORK AND THE OPERATOR WOULD BE ABLE TO BACK THE HOIST OUT OF EITHER LIMIT SWITCH IN FLOAT MODE OR WITH THE MASTER SWITCH WHILE THE FLOAT MODE FOOT SWITCH IS DEPRESSED. | NO EFFECT. | 3 |
| | CONTACT (9J6) | CONFIGURES HOIST CONTROL CIRCUIT TO ALLOW THE OPERATOR TO BACK THE HOIST OUT OF EITHER LIMIT SWITCH. | a. FAILS OPEN | FAST AND SLOW SPEED FROM THE HOIST MASTER SWITCH WOULD OPERATE NORMALLY AND WOULD ALLOW THE OPERATOR TO BACK THE HOIST OUT OF EITHER LIMIT SWITCH. FLOAT MODE WOULD WORK BUT THE OPERATOR WOULD NOT BE ABLE TO BACK THE HOIST OUT OF EITHER LIMIT SWITCH IN THE FLOAT MODE. | NO EFFECT. | 3 |
| | | | a. FAILS CLOSED | OPERATOR WOULD BE ABLE TO BACK THE HOIST OUT OF EITHER LIMIT SWITCH WITH THE MASTER SWITCH OR IN FLOAT MODE. | NO EFFECT. | 3 |
| | CONTACT (9M13) | CLOSES TO ENERGIZE HDE RELAY AND PROVIDE TIME DELAY WHEN OPENING. | a. FAILS OPEN | HOIST WILL NOT RUN IN FLOAT MODE. | NO EFFECT. | 3 |
| | | | a. FAILS CLOSED | PIC OUTPUT <25-2> WILL PREVENT HDE RELAY FROM BEING ENERGIZED. HOIST WILL NOT RUN AND BRAKES WILL (REMAIN) SET. | NO EFFECT. | 3 |
| H 700-P600A1 | HOIST RELAY (8AT17) | ENERGIZES WHEN HOIST IS COMMANDED WITH THE MASTER SWITCH. | a. FAILS DEACTIVATED (DE-ENERGIZED POSITION) | HOIST MODE WILL NOT BE ENABLED. ONLY LOWER MODE WILL BE AVAILABLE FOR USE. HOIST WILL OPERATE NORMALLY IN FLOAT MODE. | NO EFFECT. | 3 |

Table 16 (Page 11 of 50). **ELECTRICAL FMEA - HOIST**

**System** 30-TON BRIDGE CRANE
**Subsystem** HOIST
**Drawing No.** EDERER EB-2286 **Sheet No.**
**PMN** H70-1379-01

**Program** SPACE SHUTTLE

**Station Set/Facility Code** GD
**Date** MARCH 1991
**Reference Figure Used**
**Prepared By** P. CLUKEY, LSOC 51-22

| FIND NO. PART NO. | PART NAME | PART FUNCTION | a. FAILURE MODE b. CAUSE c. FMN d. DETECTION METHOD e. CORRECTING ACTION f. TIME TO EFFECT g. TIMEFRAME | FAILURE EFFECT ON SYSTEM PERFORMANCE | FAILURE EFFECT ON VEHICLE SYSTEMS AND/OR PERSONNEL SAFETY | CRIT CAT |
|---|---|---|---|---|---|---|
| | CONTACT (8A018) | CLOSES TO ENERGIZE HCMD RELAY. | a. FAILS OPEN | HOIST MODE WILL NOT OPERATE. HOIST WILL LOWER AND OPERATE IN FLOAT MODE NORMALLY. | NO EFFECT. | 3 |
| | | | a. FAILS CLOSED | WHEN LOWER MODE IS SELECTED, H RELAY MAY ENERGIZE MOMENTARILY CAUSING L RELAY TO DE-ENERGIZE. HOIST MAY NOT LOWER. HOIST MODE WILL WORK NORMALLY. | NO EFFECT. | 3 |
| | CONTACT (8AR19) | OPENS TO DISABLE L RELAY. | a. FAILS OPEN | HOIST WILL NOT FUNCTION IN LOWER MODE. HOIST MODE WILL WORK NORMALLY. | NO EFFECT. | 3 |
| | | | a. FAILS CLOSED | WOULD NOT DISABLE L RELAY. SECOND FAILURE REQUIRED TO ENERGIZE L RELAY DURING HOIST MODE. | NO EFFECT. | 3 |
| | CONTACT (9E6) | BYPASSES HOIST LOWER LIMIT SWITCH. | a. FAILS OPEN | OPERATOR WOULD NOT BE ABLE TO BACK HOIST OUT OF LOWER LIMIT IN HOIST MODE. FLOAT MODE WOULD BE ABLE TO BACK HOIST OUT OF LIMIT SWITCH. | NO EFFECT. | 3 |
| | | | a. FAILS CLOSED | HOIST MAY LOWER LOAD BLOCK TO FLOOR. DAMAGE TO WIRE ROPE MAY OCCUR. REQUIRES DOUBLE FAILURE. | NO EFFECT. | 3 |
| HCMD | COMMAND RELAY (8AT18) | | a. FAILS DEACTIVATED (COIL) | DRIVE ENABLE BRANCH WILL NOT BE COMPLETED. HOIST WILL NOT OPERATE. | NO EFFECT. | 3 |
| | CONTACT (8AR21) | CLOSES TO ENERGIZE INPUT <22-0> TO PIC. | a. FAILS OPEN | PIC INPUT <22-0> WILL NOT HAVE INPUT FOR RAISING OR LOWERING. | NO EFFECT. | 3 |

Table 16 (Page 12 of 50). **ELECTRICAL FMEA - HOIST**

**System** 30-TON BRIDGE CRANE
**Subsystem** HOIST
**Drawing No.** EDERER EB-2286 **Sheet No.**
**PMN** H70-1379-01

**Program** SPACE SHUTTLE

**Station Set/Facility Code** GD
**Date** MARCH 1991
**Reference Figure Used**
**Prepared By** P. CLUKEY, LSOC 51-22

| FIND NO. PART NO. | PART NAME | PART FUNCTION | a. FAILURE MODE b. CAUSE c. FMN d. DETECTION METHOD e. CORRECTING ACTION f. TIME TO EFFECT g. TIMEFRAME | FAILURE EFFECT ON SYSTEM PERFORMANCE | FAILURE EFFECT ON VEHICLE SYSTEMS AND/OR PERSONNEL SAFETY | CRIT CAT |
|---|---|---|---|---|---|---|
| | | | a. FAILS CLOSED | SWITCH HCMD FOR <22-0> WILL REMAIN CLOSED AND LOSE ITS TIME DELAY OPENING CAPABILITY. OTHER PIC INPUTS WILL STOP THE HOIST AND SET THE BRAKES. | NO EFFECT. | 3 |
| | CONTACT (9M14) | CLOSES TO ENERGIZE HDE RELAY AND PROVIDE TIME DELAY WHEN OPENING. | a. FAILS OPEN | DRIVE ENABLE RELAY WILL NOT BE ACTIVATED. HOIST WILL OPERATE IN FLOAT MODE ONLY. | NO EFFECT. | 3 |
| | | | a. FAILS CLOSED | PIC OUTPUT <25-2> WILL DE-ENERGIZE BDE RELAY. HOIST BRAKES WILL (REMAIN) SET. | NO EFFECT. | 3 |
| L 700-P600A1 | LOWER RELAY (8AT19) | ENERGIZED WHEN LOWER IS SELECTED WITH THE MASTER SWITCH. | a. FAILS DEACTIVATED | LOWER BRANCH WILL NOT BE COMPLETED. HOIST WILL NOT LOWER. | NO EFFECT. | 3 |
| | CONTACT (8AR17) | DISABLES HOIST RELAY WHEN LOWER RELAY IS ENERGIZED. | a. FAILS OPEN | HOIST MODE WILL NOT BE ENABLED WHEN SELECTED. LOAD COULD BE RAISED IN FLOAT MODE. | NO EFFECT. | 3 |
| | | | a. FAILS CLOSED | WOULD NOT DISABLE H RELAY. SECOND FAILURE REQUIRED TO ENERGIZE H RELAY DURING LOWER MODE. | NO EFFECT. | 3 |
| | CONTACT (8AP18) | CLOSES TO ENERGIZE HCMD RELAY. | a. FAILS OPEN | LOWER MODE WILL NOT OPERATE. HOIST MODE AND FLOAT MODE WILL OPERATE NORMALLY. | NO EFFECT. | 3 |
| | | | a. FAILS CLOSED | WHEN HOIST MODE IS SELECTED, L RELAY MAY ENERGIZE MOMENTARILY CAUSING H RELAY TO DE-ENERGIZE. HOIST MODE MAY NOT OPERATE. LOWER MODE AND FLOAT MODE WILL OPERATE NORMALLY. | NO EFFECT. | 3 |

Table 16 (Page 13 of 50). **ELECTRICAL FMEA - HOIST**

**System** 30-TON BRIDGE CRANE
**Subsystem** HOIST
**Drawing No.** EDERER EB-2286 **Sheet No.**
**PMN** H70-1379-01

**Program** SPACE SHUTTLE

**Station Set/Facility Code** GD
**Date** MARCH 1991
**Reference Figure Used**
**Prepared By** P. CLUKEY, LSOC 51-22

| FIND NO. PART NO. | PART NAME | PART FUNCTION | a. FAILURE MODE b. CAUSE c. FMN d. DETECTION METHOD e. CORRECTING ACTION f. TIME TO EFFECT g. TIMEFRAME | FAILURE EFFECT ON SYSTEM PERFORMANCE | FAILURE EFFECT ON VEHICLE SYSTEMS AND/OR PERSONNEL SAFETY | CRIT CAT |
|---|---|---|---|---|---|---|
| | CONTACT (9L6) | BYPASSES HOIST UPPER LIMIT SWITCH. | a. FAILS OPEN | OPERATOR WOULD NOT BE ABLE TO BACK HOIST OUT OF UPPER LIMIT IN LOWER MODE. FLOAT MODE WILL BACK HOIST OUT OF UPPER LIMIT. | NO EFFECT. | 3 |
| | | | a. FAILS CLOSED | UPPER LIMIT SWITCH WILL NOT STOP HOIST. WEIGHTED LIMIT SWITCH PREVENTS TWO-BLOCKING. | NO EFFECT. | 3 |
| FH 700-P200A1 | FLOAT MODE HOIST RELAY (8T26) | ENERGIZES WHEN FLOAT HOIST MODE IS SELECTED WITH POTENTIOMETER. | a. FAILS DEACTIVATED | RAISING OF HOIST IN FLOAT MODE WILL NOT BE ENABLED. | NO EFFECT. | 3 |
| | CONTACT (8R27) | DISABLES FLOAT LOWER RELAY WHEN FLOAT HOIST IS SELECTED. | a. FAILS OPEN | FLOAT MODE LOWER WILL NOT BE ENABLED. LOAD CAN BE LOWERED IN NORMAL LOWER MODE. | NO EFFECT. | 3 |
| | | | a. FAILS CLOSED | FL RELAY WILL NOT BE DISABLED. REQUIRES SECOND FAILURE TO ENERGIZE FL RELAY. | NO EFFECT. | 3 |
| | CONTACT (9E7) | BYPASSES LOWER LIMIT SWITCH. | a. FAILS OPEN | FLOAT MODE WILL NOT BACK OUT OF LOWER LIMIT SWITCH. HOIST MODE WILL BACK HOIST OUT OF LIMIT SWITCH. | NO EFFECT. | 3 |
| | | | a. FAILS CLOSED | LOWER DIRECTION GEARED LIMIT SWITCH BYPASSED IN FLOAT MODE. COULD LOWER LOAD BLOCK TO FLOOR. DAMAGE TO WIRE ROPE MAY OCCUR. REQUIRES DOUBLE FAILURE. | NO EFFECT. | 3 |
| FL 700-P200A1 | FLOAT MODE LOWER RELAY (8AT27) | ENERGIZES WHEN FLOAT LOWER MODE IS SELECTED WITH POTENTIOMETER. | a. FAILS DEACTIVATED | LOWERING OF HOIST IN FLOAT MODE WILL NOT BE ENABLED. | NO EFFECT. | 3 |

Table 16 (Page 14 of 50). **ELECTRICAL FMEA - HOIST**

**System** 30-TON BRIDGE CRANE
**Subsystem** HOIST
**Drawing No.** EDERER EB-2286 **Sheet No.**
**PMN** H70-1379-01

**Program** SPACE SHUTTLE

**Station Set/Facility Code** GD
**Date** MARCH 1991
**Reference Figure Used**
**Prepared By** P. CLUKEY, LSOC 51-22

| FIND NO. PART NO. | PART NAME | PART FUNCTION | a. FAILURE MODE<br>b. CAUSE<br>c. FMN<br>d. DETECTION METHOD<br>e. CORRECTING ACTION<br>f. TIME TO EFFECT<br>g. TIMEFRAME | FAILURE EFFECT ON SYSTEM PERFORMANCE | FAILURE EFFECT ON VEHICLE SYSTEMS AND/OR PERSONNEL SAFETY | CRIT CAT |
|---|---|---|---|---|---|---|
| | CONTACT (8AR26) | DISABLES FLOAT HOIST RELAY WHEN FLOAT LOWER IS SELECTED. | a. FAILS OPEN | FLOAT MODE HOIST WILL NOT BE ENABLED. LOAD CAN BE RAISED IN NORMAL HOIST MODE. | NO EFFECT. | 3 |
| | | | a. FAILS CLOSED | FH RELAY WILL NOT BE DISABLED. REQUIRES SECOND FAILURE TO ENERGIZE FH RELAY. | NO EFFECT. | 3 |
| | CONTACT (9L7) | BYPASSES UPPER LIMIT SWITCH. | a. FAILS OPEN | FLOAT MODE WILL NOT BACK OUT OF UPPER LIMIT SWITCH. LOWER MODE WILL BACK HOIST OUT OF UPPER LIMIT SWITCH. | NO EFFECT. | 3 |
| | | | a. FAILS CLOSED | UPPER LIMIT SWITCH WILL NOT STOP HOIST. WEIGHTED LIMIT SWITCH PREVENTS TWO-BLOCKING. | NO EFFECT. | 3 |
| NONE DS3012N | HOIST MASTER SWITCH | | | | | |
| | THUMB SWITCH (8AJ15) | CLOSES TO ENERGIZE FLOAT MODE BRAKE RELEASE INPUT TO PIC < 19-5 >. | a. FAILS OPEN | BRAKE RELEASE INPUT TO PIC WILL NOT BE ENERGIZED. FLOAT MODE WILL NOT RELEASE BRAKES. | NO EFFECT. | 3 |
| | | | a. FAILS CLOSED | FLOAT MODE WILL BE ENABLED WHEN FOOT-SWITCH IS DEPRESSED. WOULD NOT REQUIRE USE OF THUMB SWITCH. | NO EFFECT. | 3 |
| | HOIST CONTACT (8AJ17) | CLOSES TO ENERGIZE H RELAY WHEN HOIST IS COMMANDED WITH THE MASTER SWITCH. | a. FAILS OPEN | PIC WILL DETECT MASTER SWITCH NOT OFF CONDITION. HOIST MODE WILL NOT OPERATE. | NO EFFECT. | 3 |
| 3 | | | | a. FAILS CLOSED | SEE GROUND RULES. | NO EFFECT. |

Table 16 (Page 15 of 50). **ELECTRICAL FMEA - HOIST**

**System** 30-TON BRIDGE CRANE
**Subsystem** HOIST
**Drawing No.** EDERER EB-2286 **Sheet No.**
**PMN** H70-1379-01

**Program** SPACE SHUTTLE

**Station Set/Facility Code** GD
**Date** MARCH 1991
**Reference Figure Used**
**Prepared By** P. CLUKEY, LSOC 51-22

| FIND NO. PART NO. | PART NAME | PART FUNCTION | a. FAILURE MODE b. CAUSE c. FMN d. DETECTION METHOD e. CORRECTING ACTION f. TIME TO EFFECT g. TIMEFRAME | FAILURE EFFECT ON SYSTEM PERFORMANCE | FAILURE EFFECT ON VEHICLE SYSTEMS AND/OR PERSONNEL SAFETY | CRIT CAT |
|---|---|---|---|---|---|---|
| 3 | LOWER CONTACT (8AJ19) | CLOSES TO ENERGIZE L RELAY WHEN LOWER IS COMMANDED WITH THE MASTER SWITCH. | a. FAILS OPEN | PIC WILL DETECT MASTER SWITCH NOT OFF CONDITION. LOWER MODE WILL NOT OPERATE. | NO EFFECT. | 3 |
| | | | a. FAILS CLOSED | | SEE GROUND RULES. | NO EFFECT. |
| | POTENTIOMETER 5KΩ (8AJ22) | GENERATES VARIABLE VOLTAGE TO CONTROL PROPORTIONAL HOIST SPEED. | a. FAILS OPEN | LOSS OF CONTROL VOLTAGE TO HIM. HOIST DRIVE WILL NOT RUN. | NO EFFECT. | 3 |
| | | | a. FAILS SHORT | SHORT/OVERLOAD MAY DAMAGE HPS. LOSS OF +15 VOLTS WILL PREVENT THE HOIST DRIVE FROM RUNNING. | NO EFFECT. | 3 |
| NONE NSO-01FBXT-5KCT | HOIST FLOAT MODE POTENTIOMETER | | | | | |
| | HOIST CONTACT (8AJ26) | CLOSES TO ENERGIZE FH RELAY WHEN FLOAT MODE HOIST IS COMMANDED. | a. FAILS OPEN | PIC WILL DETECT FLOAT POT NOT OFF CONDITION. FLOAT MODE HOIST WILL NOT OPERATE. | NO EFFECT. | 3 |

Table 16 (Page 16 of 50). **ELECTRICAL FMEA - HOIST**

| | | | | | | |
|---|---|---|---|---|---|---|
| **System** 30-TON BRIDGE CRANE<br>**Subsystem** HOIST<br>**Drawing No.** EDERER EB-2286 **Sheet No.**<br>**PMN** H70-1379-01 | | | **Program** SPACE SHUTTLE | | **Station Set/Facility Code** GD<br>**Date** MARCH 1991<br>**Reference Figure Used**<br>**Prepared By** P. CLUKEY, LSOC 51-22 | |
| **FIND NO. PART NO.** | **PART NAME** | **PART FUNCTION** | **a. FAILURE MODE<br>b. CAUSE<br>c. FMN<br>d. DETECTION METHOD<br>e. CORRECTING ACTION<br>f. TIME TO EFFECT<br>g. TIMEFRAME** | **FAILURE EFFECT ON SYSTEM PERFORMANCE** | **FAILURE EFFECT ON VEHICLE SYSTEMS AND/OR PERSONNEL SAFETY** | **CRIT CAT** |
| | NOTE: DOES NOT COMPLY WITH NSS/GO-1740.9 REQUIREMENTS WITH REGARD TO OPERATION IN DIRECTION OTHER THAN COMMANDED. | | a. FAILS CLOSED | FLOAT MODE WILL HOIST REGARDLESS OF DIRECTION COMMANDED. FLOAT MODE WILL STOP BY CENTERING POTENTIOMETER, RELEASING FOOT OR THUMB SWITCH, OR BY PRESSING STOP OR E-STOP. | NO EFFECT. | 3 |
| | LOWER CONTACT (8AJ27) | CLOSES TO ENERGIZE FL RELAY WHEN FLOAT MODE LOWER IS COMMANDED. | a. FAILS OPEN | PIC WILL DETECT FLOAT POT NOT OFF CONDITION. FLOAT MODE LOWER WILL NOT OPERATE. | NO EFFECT. | 3 |
| | NOTE: DOES NOT COMPLY WITH NSS/GO-1740.9 REQUIREMENTS WITH REGARD TO OPERATION IN DIRECTION OTHER THAN COMMANDED. | | a. FAILS CLOSED | FLOAT MODE WILL LOWER REGARDLESS OF DIRECTION COMMANDED. FLOAT MODE WILL STOP BY CENTERING POTENTIOMETER, RELEASING FOOT OR THUMB SWITCH, OR BY PRESSING STOP OR E-STOP. | NO EFFECT. | 3 |
| | POTENTIOMETER 5KΩ (8AJ28) | GENERATES VARIABLE VOLTAGE TO CONTROL PROPORTIONAL FLOAT MODE SPEED. | a. FAILS OPEN | LOSS OF CONTROL VOLTAGE TO HIM. FLOAT MODE WILL NOT RUN. | NO EFFECT. | 3 |

Table 16 (Page 17 of 50). **ELECTRICAL FMEA - HOIST**

**System** 30-TON BRIDGE CRANE
**Subsystem** HOIST
**Drawing No.** EDERER EB-2286 **Sheet No.**
**PMN** H70-1379-01

**Program** SPACE SHUTTLE

**Station Set/Facility Code** GD
**Date** MARCH 1991
**Reference Figure Used**
**Prepared By** P. CLUKEY, LSOC 51-22

| FIND NO. PART NO. | PART NAME | PART FUNCTION | a. FAILURE MODE b. CAUSE c. FMN d. DETECTION METHOD e. CORRECTING ACTION f. TIME TO EFFECT g. TIMEFRAME | FAILURE EFFECT ON SYSTEM PERFORMANCE | FAILURE EFFECT ON VEHICLE SYSTEMS AND/OR PERSONNEL SAFETY | CRIT CAT |
|---|---|---|---|---|---|---|
| | | | a. FAILS SHORT | SHORT/OVERLOAD MAY DAMAGE HPS. LOSS OF +15 VOLTS WILL PREVENT HOIST FLOAT MODE FROM RUNNING. | NO EFFECT. | 3 |
| HPT 700-PT200A1 | HOIST POWER UP TIMER RELAY (9T2) | ALLOWS HOSR RELAY TO PULL IN AND HOLD DURING POWER UP. | a. FAILS DEACTIVATED | HOIST NORTH AND SOUTH DRIVES WILL BE DISABLED OR OVERSPEED SWITCH REQUIRES A MANUAL RESET FOLLOWING AN OVERSPEED. | NO EFFECT. | 3 |
| | CONTACT (9P3) | ENERGIZES HOSR RELAY THEN OPENS AFTER A 1 SECOND DELAY. | a. FAILS OPEN | HOSR RELAY WILL NOT ENERGIZE CAUSING MCB TO TRIP. CRANE WILL SHUT DOWN. | NO EFFECT. | 3 |
| | | | a. FAILS CLOSED | HOSR RELAY WILL NOT RE-ENERGIZE SINCE OVERSPEED WILL TRIP THE MAIN CIRCUIT BREAKER. REQUIRES DOUBLE FAILURE. | NO EFFECT. | 3 |
| | CONTACT (3J24) | CLOSES AFTER 1 SECOND DELAY TO ALLOW HOSR CONTACT TO OPEN WITHOUT TRIPPING MCB. | a. FAILS OPEN | OVERSPEED WILL NOT TRIP MCB. REQUIRES DOUBLE FAILURE. | NO EFFECT. | 3 |
| | | | a. FAILS CLOSED | MCB WILL TRIP AND SHUT DOWN CRANE BEFORE HOSR CONTACT OPENS. | NO EFFECT. | 3 |
| | CONTACT (9N6) | CLOSES TO ENERGIZE HL RELAY. | a. FAILS OPEN | HL RELAY WILL NOT ENERGIZE. HOIST DRIVES WILL NOT BE ENABLED AND BRAKES WILL (REMAIN) SET. | NO EFFECT. | 3 |
| | | | a. FAILS CLOSED | HL RELAY WILL ENERGIZE NORMALLY. | NO EFFECT. | 3 |
| HOS 2210-142CC135 | HOIST OVERSPEED (CENTRI-FUGAL) (9G3) | (CRANE #1) CONTACTS OPEN WHEN HOIST EXCEEDS A PRESET RPM. | a. FAILS CLOSED | ELECTRONIC OVERSPEED WILL DETECT OVERSPEED AND TRIP MCB. DOUBLE FAILURE REQUIRED. | NO EFFECT. | 3 |

Table 16 (Page 18 of 50). **ELECTRICAL FMEA - HOIST**

**System** 30-TON BRIDGE CRANE
**Subsystem** HOIST
**Drawing No.** EDERER EB-2286 **Sheet No.**
**PMN** H70-1379-01

**Program** SPACE SHUTTLE

**Station Set/Facility Code** GD
**Date** MARCH 1991
**Reference Figure Used**
**Prepared By** P. CLUKEY, LSOC 51-22

| FIND NO. PART NO. | PART NAME | PART FUNCTION | a. FAILURE MODE<br>b. CAUSE<br>c. FMN<br>d. DETECTION METHOD<br>e. CORRECTING ACTION<br>f. TIME TO EFFECT<br>g. TIMEFRAME | FAILURE EFFECT ON SYSTEM PERFORMANCE | FAILURE EFFECT ON VEHICLE SYSTEMS AND/OR PERSONNEL SAFETY | CRIT CAT |
|---|---|---|---|---|---|---|
| | | | a. FAILS OPEN | HOSR RELAY WILL NOT ENERGIZE, CAUSING MCB TO TRIP WHEN CRANE IS POWERED UP. | NO EFFECT. | 3 |
| | | (CRANE #2) CONTACTS CLOSE WHEN HOIST EXCEEDS A PRESET RPM. | a. FAILS CLOSED | OSTD RELAY WILL NOT DE-ENERGIZE, CAUSING THE MCB TO TRIP. CRANE WILL SHUT DOWN. | NO EFFECT. | 3 |
| | | | a. FAILS OPEN | ELECTRONIC OVERSPEED WILL DETECT OVERSPEED AND TRIP MCB. DOUBLE FAILURE REQUIRED. | NO EFFECT. | 3 |
| OSTD (CRANE #2 ONLY) | OVERSPEED TIME DELAY RELAY (9T3) | ENERGIZES WHEN CENTRIFUGAL OVERSPEED SWITCH DETECTS HOIST OVERSPEED. | a. FAILS DEACTIVATED | ELECTRONIC OVERSPEED WILL DETECT OVERSPEED AND TRIP MCB. DOUBLE FAILURE REQUIRED. | NO EFFECT. | 3 |
| | CONTACT (3J23) | CLOSES TO TRIP MCB. | a. FAILS OPEN | ELECTRONIC OVERSPEED WILL DETECT OVERSPEED AND TRIP MCB. DOUBLE FAILURE REQUIRED. | NO EFFECT. | 3 |
| | | | a. FAILS CLOSED | CRANE WILL NOT POWER UP. | NO EFFECT. | 3 |
| HOSR 700-P200A1 | HOIST OVERSPEED RELAY (9T3) | DE-ENERGIZES WHEN AN OVERSPEED OCCURS. | a. FAILS DEACTIVATED | CONTACTS (3L24) WILL NOT OPEN CAUSING MCB TO TRIP. CRANE WILL SHUT DOWN. DOUBLE FAILURE REQUIRED. | NO EFFECT. | 3 |
| | CONTACT (9P3) | CLOSES TO HOLD HOSR RELAY ENERGIZED. | a. FAILS OPEN | HOSR RELAY WILL DE-ENERGIZE WHEN HPT CONTACT OPENS CAUSING MCB TO TRIP. CRANE WILL SHUT DOWN. | NO EFFECT. | 3 |
| | | | a. FAILS CLOSED | CRANE WILL SHUT DOWN IF OVER-SPEED DETECTED. | NO EFFECT. | 3 |
| | CONTACT (906) | CLOSES TO ENERGIZE HL RELAY. | a. FAILS OPEN | HL RELAY WILL NOT ENERGIZE. HOIST DRIVES WILL NOT BE ENABLED AND BRAKES WILL (REMAIN) SET. | NO EFFECT. | 3 |

Table 16 (Page 19 of 50). **ELECTRICAL FMEA - HOIST**

**System** 30-TON BRIDGE CRANE
**Subsystem** HOIST
**Drawing No.** EDERER EB-2286 **Sheet No.**
**PMN** H70-1379-01

**Program** SPACE SHUTTLE

**Station Set/Facility Code** GD
**Date** MARCH 1991
**Reference Figure Used**
**Prepared By** P. CLUKEY, LSOC 51-22

| FIND NO. PART NO. | PART NAME | PART FUNCTION | a. FAILURE MODE b. CAUSE c. FMN d. DETECTION METHOD e. CORRECTING ACTION f. TIME TO EFFECT g. TIMEFRAME | FAILURE EFFECT ON SYSTEM PERFORMANCE | FAILURE EFFECT ON VEHICLE SYSTEMS AND/OR PERSONNEL SAFETY | CRIT CAT |
|---|---|---|---|---|---|---|
| | | | a. FAILS CLOSED | HOIST OVERSPEED WILL TRIP THE MCB, SHUTTING DOWN THE CRANE. DOUBLE FAILURE REQUIRED. | NO EFFECT. | 3 |
| | CONTACT (3L24) | CONTACT CLOSES TO TRIP MCB. | a. FAILS OPEN | OVERSPEED WILL NOT TRIP MCB BUT WILL DISABLE HOIST DRIVES AS SET BRAKES. REQUIRES DOUBLE FAILURE. | NO EFFECT. | 3 |
| | | | a. FAILS CLOSED | MCB WILL TRIP AFTER 1 SECOND DELAY WHEN HPT CONTACT CLOSES. | NO EFFECT. | 3 |
| | CONTACT (4C27, 5C27) | CONTACT OPENS TO DE-ENERGIZE RESET INPUT TO HNMCM AND HSMCM. | a. FAILS OPEN | HOSR RELAY WILL CAUSE MCB TO TRIP IF OVERSPEED OCCURS. CRANE WILL SHUT DOWN. REQUIRES DOUBLE FAILURE. | NO EFFECT. | 3 |
| | | | a. FAILS CLOSED | RESET INPUT TO HNFSA OR HSFSA WILL DISABLE HNMCM OR HSMCM. PIC WILL DETECT DRIVE IMBALANCE AND SHUT DOWN HOIST. | NO EFFECT. | 3 |
| NONE CR115E-126122 | HOIST LOWER ROTARY LIMIT SWITCH (9G5) | CONTACT OPENS WHEN HOIST REACHES PRESET LOWER LIMIT. | a. FAILS OPEN | HOIST WILL NOT LOWER IN NORMAL OR FLOAT MODE. | NO EFFECT. | 3 |
| | | | a. FAILS CLOSED | HOIST MAY LOWER LOAD BLOCK ONTO THE FLOOR. POSSIBLE DAMAGE TO WIRE ROPE. REQUIRES DOUBLE FAILURE. | NO EFFECT. | 3 |
| | HOIST UPPER ROTARY LIMIT SWITCH (9K5) | CONTACT OPENS WHEN HOIST REACHES PRESET UPPER LIMIT. | a. FAILS OPEN | HOIST WILL NOT RAISE LOAD IN NORMAL OR FLOAT MODE. | NO EFFECT. | 3 |

Table 16 (Page 20 of 50). **ELECTRICAL FMEA - HOIST**

**System** 30-TON BRIDGE CRANE
**Subsystem** HOIST
**Drawing No.** EDERER EB-2286 **Sheet No.**
**PMN** H70-1379-01

**Program** SPACE SHUTTLE

**Station Set/Facility Code** GD
**Date** MARCH 1991
**Reference Figure Used**
**Prepared By** P. CLUKEY, LSOC 51-22

| FIND NO. PART NO. | PART NAME | PART FUNCTION | a. FAILURE MODE b. CAUSE c. FMN d. DETECTION METHOD e. CORRECTING ACTION f. TIME TO EFFECT g. TIMEFRAME | FAILURE EFFECT ON SYSTEM PERFORMANCE | FAILURE EFFECT ON VEHICLE SYSTEMS AND/OR PERSONNEL SAFETY | CRIT CAT |
|---|---|---|---|---|---|---|
| | | | a. FAILS CLOSED | UPPER WEIGHT LIMIT SWITCH WILL PREVENT TWO-BLOCKING. REQUIRES DOUBLE FAILURE. | NO EFFECT. | 3 |
| HL 700-P200A1 | HOIST LIMIT RELAY (9T5) | ENERGIZES WHEN OVER-SPEED AND CONTACTOR LOOPS ARE CLOSED. | a. FAILS DEACTIVATED | HOISTS DRIVES WILL BE DISABLED AND BRAKES WILL (REMAIN) SET. | NO EFFECT. | 3 |
| | CONTACT (9J14) | CLOSES TO ENERGIZE HDE RELAY | a. FAILS OPEN | HOISTS DRIVES WILL BE DISABLED AND BRAKES WILL (REMAIN) SET. | NO EFFECT. | 3 |
| | | | a. FAILS CLOSED | PIC OUTPUT <25-2> WILL DISABLE HOIST DRIVES AND SET BRAKES. | NO EFFECT. | 3 |
| HNR 700-P200A1 | HOIST NORTH READY RELAY (9S8) | ENERGIZES WHEN NORTH DRIVE IS SELECTED AND READY TO RUN. | a. FAILS DEACTIVATED | HOIST NORTH CONTACTOR LOOP WOULD NOT BE CLOSED. NORTH DRIVE WOULD NOT RUN. PIC WOULD DETECT DRIVE IMBALANCE AND SHUT DOWN HOIST. | NO EFFECT. | 3 |
| | CONTACT (9E10) | CLOSES TO ENERGIZE HNC RELAY. | a. FAILS OPEN | HOIST NORTH CONTACTOR LOOP WOULD NOT BE CLOSED. NORTH DRIVE WOULD NOT RUN. PIC WOULD DETECT DRIVE IMBALANCE AND SHUT DOWN HOIST. | NO EFFECT. | 3 |
| | | | a. FAILS CLOSED | LINE FAULT WILL DISABLE HNMCM, HOM, AND HIM. HOIST NORTH MOTOR OVERLOAD REQUIRES DOUBLE FAILURE. | NO EFFECT. | 3 |
| | CONTACT (4K24) | CLOSES TO SEND ENABLE SIGNAL FROM HNFSA TO HNMCM. | a. FAILS OPEN | HNMCM WILL NOT BE ENABLED. PIC WILL DETECT LOAD IMBALANCE AND SHUT DOWN HOIST. | NO EFFECT. | 3 |
| | | | a. FAILS CLOSED | HNR CONTACT (9E10) WILL OPEN LOOP CONTACTORS FOR NORTH HOIST DRIVE. PIC WILL DETECT LOAD IMBALANCE AND SHUT DOWN HOIST. | NO EFFECT. | 3 |

Table 16 (Page 21 of 50). **ELECTRICAL FMEA - HOIST**

**System** 30-TON BRIDGE CRANE
**Subsystem** HOIST
**Drawing No.** EDERER EB-2286 **Sheet No.**
**PMN** H70-1379-01

**Program** SPACE SHUTTLE

**Station Set/Facility Code** GD
**Date** MARCH 1991
**Reference Figure Used**
**Prepared By** P. CLUKEY, LSOC 51-22

| FIND NO. PART NO. | PART NAME | PART FUNCTION | a. FAILURE MODE b. CAUSE c. FMN d. DETECTION METHOD e. CORRECTING ACTION f. TIME TO EFFECT g. TIMEFRAME | FAILURE EFFECT ON SYSTEM PERFORMANCE | FAILURE EFFECT ON VEHICLE SYSTEMS AND/OR PERSONNEL SAFETY | CRIT CAT |
|---|---|---|---|---|---|---|
| | CONTACT (4J24) | CLOSES TO SEND ENABLE SIGNAL FROM HNFSA TO HOM AND HIM. | a. FAILS OPEN | HOM AND HIM WILL USE HOIST SOUTH DRIVE SIGNALS TO RUN HOIST. | NO EFFECT. | 3 |
| | | | a. FAILS CLOSED | HNR CONTACTS WILL DISABLE HNMCM AND OPEN HOIST NORTH LOOP CONTACTORS. PIC WILL DETECT LOAD IMBALANCE AND SHUT DOWN HOIST. | NO EFFECT. | 3 |
| HSR 700-P200A1 | HOIST SOUTH READY RELAY (9S10) | ENERGIZES WHEN SOUTH DRIVE IS SELECTED AND READY TO RUN. | a. FAILS DEACTIVATED | HOIST SOUTH CONTACTOR LOOP WOULD NOT BE CLOSED. SOUTH DRIVE WILL NOT RUN. PIC WOULD DETECT LOAD IMBALANCE AND SHUT DOWN HOIST. | NO EFFECT. | 3 |
| | CONTACT (9E12) | CLOSES TO ENERGIZE HSC RELAY. | a. FAILS OPEN | HOIST SOUTH CONTACTOR LOOP WOULD NOT BE CLOSED. SOUTH DRIVE WILL NOT RUN. PIC WOULD DETECT LOAD IMBALANCE AND SHUT DOWN HOIST. | NO EFFECT. | 3 |
| | | | a. FAILS CLOSED | LINE FAULT WILL DISABLE HSMCM, HOM, AND HIM. HOIST SOUTH MOTOR OVERLOAD REQUIRES DOUBLE FAILURE. | NO EFFECT. | 3 |
| | CONTACT (5K24) | CLOSES TO SEND ENABLE SIGNAL FROM HSFSA TO HSMCM. | a. FAILS OPEN | HSMCM WILL NOT BE ENABLED. PIC WILL DETECT LOAD IMBALANCE AND SHUT DOWN HOIST. | NO EFFECT. | 3 |
| | | | a. FAILS CLOSED | HSR CONTACT (9E12) WILL OPEN LOOP CONTACTORS FOR SOUTH HOIST DRIVE. PIC WILL DETECT LOAD IMBALANCE AND SHUT DOWN HOIST. | NO EFFECT. | 3 |
| | CONTACT (5J24) | CLOSES TO SEND ENABLE SIGNAL FROM HSFSA TO HOM AND HIM. | a. FAILS OPEN | HOM AND HIM WILL USE HOIST NORTH DRIVE FEEDBACK SIGNALS TO RUN HOIST. | NO EFFECT. | 3 |

Table 16 (Page 22 of 50). **ELECTRICAL FMEA - HOIST**

**System** 30-TON BRIDGE CRANE
**Subsystem** HOIST
**Drawing No.** EDERER EB-2286 **Sheet No.**
**PMN** H70-1379-01

**Program** SPACE SHUTTLE

**Station Set/Facility Code** GD
**Date** MARCH 1991
**Reference Figure Used**
**Prepared By** P. CLUKEY, LSOC 51-22

| FIND NO. PART NO. | PART NAME | PART FUNCTION | a. FAILURE MODE b. CAUSE c. FMN d. DETECTION METHOD e. CORRECTING ACTION f. TIME TO EFFECT g. TIMEFRAME | FAILURE EFFECT ON SYSTEM PERFORMANCE | FAILURE EFFECT ON VEHICLE SYSTEMS AND/OR PERSONNEL SAFETY | CRIT CAT |
|---|---|---|---|---|---|---|
| | | | a. FAILS CLOSED | HNR CONTACTS WILL DISABLE HSMCM AND OPEN HOIST SOUTH LOOP CONTACTORS. PIC WILL DETECT LOAD IMBALANCE AND SHUT DOWN HOIST. | NO EFFECT. | 3 |
| HNC 302AP-2LT | HOIST NORTH LOOP CONTACTOR RELAY (9S10) | ENERGIZES WHEN HOIST NORTH DRIVE IS READY. | a. FAILS DEACTIVATED | HOIST NORTH LOOP CONTACTORS WILL NOT CLOSE. HOIST NORTH DRIVE WILL NOT RUN. PIC WILL DETECT LOAD IMBALANCE AND SHUT DOWN HOIST. | NO EFFECT. | 3 |
| | CONTACT (9Q5) | CLOSES TO ENERGIZE HL RELAY AND PIC INPUT <22-3>. | a. FAILS OPEN | HSC CONTACT WILL ENERGIZE HL RELAY AND PIC INPUT <22-3>. | NO EFFECT. | 3 |
| | | | a. FAILS CLOSED | HNC CONTACTS WILL OPEN HOIST NORTH CONTACTOR LOOP. PIC WILL DETECT LOAD IMBALANCE AND SHUT DOWN HOIST. | NO EFFECT. | 3 |
| | CONTACT (4U11) | CLOSES TO COMPLETE HOIST NORTH ARMATURE CURRENT LOOP. | a. FAILS OPEN | HOIST NORTH ARMATURE CURRENT DISABLED. HOIST NORTH DRIVE WILL NOT RUN. PIC WILL DETECT LOAD IMBALANCE AND SHUT DOWN HOIST. | NO EFFECT. | 3 |
| | | | a. FAILS CLOSED | HNC CONTACT (4U14) WILL OPEN HOIST NORTH ARMATURE LOOP. | NO EFFECT. | 3 |
| | CONTACT (4U14) | CLOSES TO COMPLETE HOIST NORTH ARMATURE CURRENT LOOP. | a. FAILS OPEN | HOIST NORTH ARMATURE CURRENT DISABLED. HOIST NORTH DRIVE WILL NOT RUN. PIC WILL DETECT LOAD IMBALANCE AND SHUT DOWN HOIST. | NO EFFECT. | 3 |
| | | | a. FAILS CLOSED | HNC CONTACT (4U11) WILL OPEN HOIST NORTH ARMATURE LOOP. | NO EFFECT. | 3 |

Table 16 (Page 23 of 50). **ELECTRICAL FMEA - HOIST**

**System** 30-TON BRIDGE CRANE
**Subsystem** HOIST
**Drawing No.** EDERER EB-2286 **Sheet No.**
**PMN** H70-1379-01

**Program** SPACE SHUTTLE

**Station Set/Facility Code** GD
**Date** MARCH 1991
**Reference Figure Used**
**Prepared By** P. CLUKEY, LSOC 51-22

| FIND NO. PART NO. | PART NAME | PART FUNCTION | a. FAILURE MODE b. CAUSE c. FMN d. DETECTION METHOD e. CORRECTING ACTION f. TIME TO EFFECT g. TIMEFRAME | FAILURE EFFECT ON SYSTEM PERFORMANCE | FAILURE EFFECT ON VEHICLE SYSTEMS AND/OR PERSONNEL SAFETY | CRIT CAT |
|---|---|---|---|---|---|---|
| | CONTACT (4K25) | CLOSES TO ENERGIZE INPUT TO HNFSA ALLOWING ENABLE SIGNAL TO REACH HNMCM. | a. FAILS OPEN | HNMCM WILL BE DISABLED. HOIST NORTH DRIVE WILL NOT RUN. PIC WILL DETECT LOAD IMBALANCE AND SHUT DOWN HOIST. | NO EFFECT. | 3 |
| | | | a. FAILS CLOSED | HNR CONTACT WILL PREVENT HNMCM FROM BEING ENABLED. | NO EFFECT. | 3 |
| HSC 302AP-2LT | HOIST SOUTH LOOP CONTACTOR RELAY (9S12) | ENERGIZES WHEN HOIST SOUTH DRIVE IS READY. | a. FAILS DEACTIVATED | HOIST SOUTH LOOP CONTACTORS WILL NOT CLOSE. HOIST SOUTH DRIVE WILL NOT RUN. PIC WILL DETECT LOAD IMBALANCE AND SHUT DOWN HOIST. | NO EFFECT. | 3 |
| | CONTACT (9Q6) | CLOSES TO ENERGIZE HL RELAY AND PIC INPUT <22-3>. | a. FAILS OPEN | HNC CONTACT WILL ENERGIZE HL RELAY AND PIC INPUT <22-3>. | NO EFFECT. | 3 |
| | | | a. FAILS CLOSED | HSC CONTACTS WILL OPEN HOIST SOUTH CONTACTOR LOOP. PIC WILL DETECT LOAD IMBALANCE AND SHUT DOWN HOIST. | NO EFFECT. | 3 |
| | CONTACT (5U11) | CLOSES TO COMPLETE HOIST SOUTH ARMATURE CURRENT LOOP. | a. FAILS OPEN | HOIST SOUTH ARMATURE CURRENT DISABLED. HOIST SOUTH DRIVE WILL NOT RUN. PIC WILL DETECT LOAD IMBALANCE AND SHUT DOWN HOIST. | NO EFFECT. | 3 |
| | | | a. FAILS CLOSED | HSC CONTACT (5U14) WILL OPEN HOIST SOUTH ARMATURE LOOP. | NO EFFECT. | 3 |
| | CONTACT (5U14) | CLOSES TO COMPLETE HOIST SOUTH ARMATURE CURRENT LOOP. | a. FAILS OPEN | HOIST SOUTH ARMATURE CURRENT DISABLED. HOIST SOUTH DRIVE WILL NOT RUN. PIC WILL DETECT LOAD IMBALANCE AND SHUT DOWN HOIST. | NO EFFECT. | 3 |
| | | | a. FAILS CLOSED | HSC CONTACT (5U11) WILL OPEN HOIST SOUTH ARMATURE LOOP. | NO EFFECT. | 3 |

Table 16 (Page 24 of 50). **ELECTRICAL FMEA - HOIST**

**System** 30-TON BRIDGE CRANE
**Subsystem** HOIST
**Drawing No.** EDERER EB-2286 **Sheet No.**
**PMN** H70-1379-01

**Program** SPACE SHUTTLE

**Station Set/Facility Code** GD
**Date** MARCH 1991
**Reference Figure Used**
**Prepared By** P. CLUKEY, LSOC 51-22

| FIND NO. PART NO. | PART NAME | PART FUNCTION | a. FAILURE MODE b. CAUSE c. FMN d. DETECTION METHOD e. CORRECTING ACTION f. TIME TO EFFECT g. TIMEFRAME | FAILURE EFFECT ON SYSTEM PERFORMANCE | FAILURE EFFECT ON VEHICLE SYSTEMS AND/OR PERSONNEL SAFETY | CRIT CAT |
|---|---|---|---|---|---|---|
| | CONTACT (5K25) | CLOSES TO ENERGIZE INPUT TO HSFSA ALLOWING ENABLE SIGNAL TO REACH HSMCM. | a. FAILS OPEN | HSMCM WILL BE DISABLED. HOIST SOUTH DRIVE WILL NOT RUN. PIC WILL DETECT LOAD IMBALANCE AND SHUT DOWN HOIST. | NO EFFECT. | 3 |
| | | | a. FAILS CLOSED | HSR CONTACT WILL PREVENT HSMCM FROM BEING ENABLED. | NO EFFECT. | 3 |
| HDE 700-P200A1 | HOIST DRIVE ENABLE RELAY (9S14) | ENERGIZES WHEN HOIST DRIVES ARE READY TO RUN AND MOTION IS COMMANDED. | a. FAILS DEACTIVATED | HOIST DRIVES WILL BE DISABLED AND BRAKES WILL (REMAIN) SET. | NO EFFECT. | 3 |
| | CONTACT (9J15) | CLOSES TO ENERGIZE HBC RELAY. | a. FAILS OPEN | HOIST BRAKES WILL (REMAIN) SET. HOIST WILL NOT RUN. | NO EFFECT. | 3 |
| | | | a. FAILS CLOSED | PIC OUTPUT < 25-3 > WILL DE-ENERGIZE HBC RELAY AND SET BRAKES. | NO EFFECT. | 3 |
| | CONTACT (4M24) | CLOSES TO SEND ENABLE SIGNAL FROM HNFSA TO HNMCM. | a. FAILS OPEN | HNMCM WILL NOT BE ENABLED. HOIST NORTH DRIVE WILL NOT RUN. PIC WILL DETECT LOAD IMBALANCE AND SHUT DOWN HOIST. | NO EFFECT. | 3 |
| | | | a. FAILS CLOSED | HDE CONTACT (9J15) WILL SET BRAKES AFTER HOIST HAS BEEN COMMANDED TO STOP. | NO EFFECT. | 3 |
| | CONTACT (4M25) | CLOSES TO SEND ENABLE SIGNAL FROM HNFSA TO HOM AND HIM. | a. FAILS OPEN | HOM AND HIM WILL USE HOIST SOUTH DRIVE SIGNALS TO RUN HOIST. | NO EFFECT. | 3 |
| | | | a. FAILS CLOSED | HDE CONTACTS WILL DISABLE HNMCM AND HSMCM AND SET HOIST BRAKES. | NO EFFECT. | 3 |

Table 16 (Page 25 of 50). **ELECTRICAL FMEA - HOIST**

**System** 30-TON BRIDGE CRANE
**Subsystem** HOIST
**Drawing No.** EDERER EB-2286 **Sheet No.**
**PMN** H70-1379-01

**Program** SPACE SHUTTLE

**Station Set/Facility Code** GD
**Date** MARCH 1991
**Reference Figure Used**
**Prepared By** P. CLUKEY, LSOC 51-22

| FIND NO. PART NO. | PART NAME | PART FUNCTION | a. FAILURE MODE b. CAUSE c. FMN d. DETECTION METHOD e. CORRECTING ACTION f. TIME TO EFFECT g. TIMEFRAME | FAILURE EFFECT ON SYSTEM PERFORMANCE | FAILURE EFFECT ON VEHICLE SYSTEMS AND/OR PERSONNEL SAFETY | CRIT CAT |
|---|---|---|---|---|---|---|
| | CONTACT (5M24) | CLOSES TO SEND ENABLE SIGNAL FROM HSFSA TO HSMCM. | a. FAILS OPEN | HSMCM WILL NOT BE ENABLED. HOIST SOUTH DRIVE WILL NOT RUN. PIC WILL DETECT LOAD IMBALANCE AND SHUT DOWN HOIST. | NO EFFECT. | 3 |
| | | | a. FAILS CLOSED | HDE CONTACT (9J15) WILL SET BRAKES AFTER HOIST HAS BEEN COMMANDED TO STOP. | NO EFFECT. | 3 |
| | CONTACT (5M25) | CLOSES TO SEND ENABLE SIGNAL FROM HSFSA TO HOM AND HIM. | a. FAILS OPEN | HOM AND HIM WILL USE HOIST NORTH DRIVE SIGNALS TO RUN HOIST. | NO EFFECT. | 3 |
| | | | a. FAILS CLOSED | HDE CONTACTS WILL DISABLE HNMCM AND HSMCM AND SET HOIST BRAKES. | NO EFFECT. | 3 |
| HBC 700-P200A1 | HOIST BRAKE CONTACTOR RELAY (9S15) | ENERGIZES WHEN MOTION IS COMMANDED. | a. FAILS DEACTIVATED | BRAKES WILL (REMAIN) SET. HOIST WILL NOT RUN. | NO EFFECT. | 3 |
| | CONTACTS (4H1, 4K1) | SERIES CONTACTS TO SUPPLY AC POWER TO HOIST BRAKE CIRCUIT. | a. FAILS OPEN | BRAKES WILL (REMAIN) SET. HOIST WILL NOT RUN. | NO EFFECT. | 3 |
| | | | a. FAILS CLOSED | OTHER HBC CONTACT WILL DE-ENERGIZE BRAKE CIRCUIT. | NO EFFECT. | 3 |
| HBC1 (CRANE #2 ONLY) | HOIST BRAKE CONTACTOR 1 RELAY (9S16) | ENERGIZES WHEN MOTION IS COMMANDED. | a. FAILS DEACTIVATED | BRAKES WILL (REMAIN) SET. HOIST WILL NOT RUN. | NO EFFECT. | 3 |
| | CONTACT (4S3) | CONTACT TO SUPPLY DC POWER TO HOIST NORTH BRAKE CIRCUIT. | a. FAILS OPEN | NORTH BRAKE WILL (REMAIN) SET. HOIST WILL NOT RUN. | NO EFFECT. | 3 |

Table 16 (Page 26 of 50). **ELECTRICAL FMEA - HOIST**

**System** 30-TON BRIDGE CRANE
**Subsystem** HOIST
**Drawing No.** EDERER EB-2286 **Sheet No.**
**PMN** H70-1379-01

**Program** SPACE SHUTTLE

**Station Set/Facility Code** GD
**Date** MARCH 1991
**Reference Figure Used**
**Prepared By** P. CLUKEY, LSOC 51-22

| FIND NO. PART NO. | PART NAME | PART FUNCTION | a. FAILURE MODE b. CAUSE c. FMN d. DETECTION METHOD e. CORRECTING ACTION f. TIME TO EFFECT g. TIMEFRAME | FAILURE EFFECT ON SYSTEM PERFORMANCE | FAILURE EFFECT ON VEHICLE SYSTEMS AND/OR PERSONNEL SAFETY | CRIT CAT |
|---|---|---|---|---|---|---|
| | CONTACT (4S6) | CONTACT TO SUPPLY DC POWER TO HOIST SOUTH BRAKE CIRCUIT. | a. FAILS OPEN | SOUTH BRAKE WILL (REMAIN) SET. HOIST WILL NOT RUN. | NO EFFECT. | 3 |
| | | | a. FAILS CLOSED | HBC CONTACTS WILL DE-ENERGIZE BRAKE CIRCUIT. | NO EFFECT. | 3 |
| HBF 103-6520 | HOIST BRAKE FORCING CONTACTOR RELAY (9S16) | ENERGIZES FOR 5 SECONDS WHEN HOIST MOTION IS COMMANDED. | a. FAILS DEACTIVATED | BRAKES MAY NOT FULLY RELEASE WHEN HOIST MOTION BEGINS. COULD CAUSE EXCESSIVE BRAKE WEAR. | NO EFFECT. | 3 |
| | CONTACT (401) | CLOSES TO FULLY RELEASE HOIST NORTH MOTOR BRAKE. | a. FAILS OPEN | HOIST NORTH MOTOR BRAKE MAY NOT FULLY RELEASE. COULD CAUSE EXCESSIVE BRAKE WEAR. | NO EFFECT. | 3 |
| | | | a. FAILS CLOSED | POSSIBLE DAMAGE TO HOIST NORTH MOTOR BRAKE COIL FROM CONTINUOUS HIGH CURRENT. | NO EFFECT. | 3 |
| | CONTACT (404) | CLOSES TO FULLY RELEASE HOIST SOUTH MOTOR BRAKE. | a. FAILS OPEN | HOIST SOUTH MOTOR BRAKE MAY NOT FULLY RELEASE. COULD CAUSE EXCESSIVE BRAKE WEAR. | NO EFFECT. | 3 |
| | | | a. FAILS CLOSED | POSSIBLE DAMAGE TO HOIST SOUTH MOTOR BRAKE COIL FROM CONTINUOUS HIGH CURRENT. | NO EFFECT. | 3 |
| NONE T8105 | MOTOR NORTH WARNING THERMISTOR (9G18) | MEASURES THE TEMPERATURE OF THE HOIST NORTH MOTOR. | a. FAILS OPEN | NORTH HOIST MOTOR OVERTEMP WARNING LIGHT ON CONTINUOUSLY. | NO EFFECT. | 3 |
| | | | a. FAILS SHORT | LOSS OF OVERTEMP WARNING. HNMTS WILL SHUTDOWN HOIST IF OVERTEMP OCCURS. | NO EFFECT. | 3 |

Table 16 (Page 27 of 50). **ELECTRICAL FMEA - HOIST**

**System** 30-TON BRIDGE CRANE
**Subsystem** HOIST
**Drawing No.** EDERER EB-2286 **Sheet No.**
**PMN** H70-1379-01

**Program** SPACE SHUTTLE

**Station Set/Facility Code** GD
**Date** MARCH 1991
**Reference Figure Used**
**Prepared By** P. CLUKEY, LSOC 51-22

| FIND NO. PART NO. | PART NAME | PART FUNCTION | a. FAILURE MODE b. CAUSE c. FMN d. DETECTION METHOD e. CORRECTING ACTION f. TIME TO EFFECT g. TIMEFRAME | FAILURE EFFECT ON SYSTEM PERFORMANCE | FAILURE EFFECT ON VEHICLE SYSTEMS AND/OR PERSONNEL SAFETY | CRIT CAT |
|---|---|---|---|---|---|---|
| HNMTW 135101 | HOIST NORTH MOTOR OVERTEMP WARNING MODULE (9G20) | MONITORS HOIST NORTH OVERTEMP WARNING THERMISTOR AND CONTROLS NORTH OVERTEMP WARNING LIGHT. | a. LOW OR NO OUTPUT | LOSS OF OVERTEMP WARNING. HNMTS WILL SHUTDOWN HOIST IF OVERTEMP OCCURS. | NO EFFECT. | 3 |
| | | | a. HIGH OR CONTINUOUS OUTPUT | NORTH OVERTEMP WARNING LIGHT WILL BE ILLUMINATED CONTINUOUSLY. HOIST WILL OPERATE NORMALLY. | NO EFFECT. | 3 |
| NONE 9001-KP-1 | NORTH HOIST OVERTEMP WARNING LIGHT (9S20) | INDICATES ABOVE NORMAL OPERATING TEMPERATURE. | a. FAILS OPEN | LOSS OF OVERTEMP WARNING. HNMTS WILL SHUTDOWN HOIST IF OVERTEMP OCCURS. | NO EFFECT. | 3 |
| | | | a. FAILS SHORT | CURRENT OVERLOAD WILL BLOW FU19. HOIST CONTROLS WILL DE-ENERGIZE AND BRAKES WILL SET. | NO EFFECT. | 3 |
| NONE T8135 | HOIST NORTH MOTOR SHUTDOWN THERMISTOR (9N18) | MEASURES THE TEMPERATURE OF THE HOIST NORTH MOTOR. | a. FAILS OPEN | HNMTS WILL SIGNAL PIC THAT OVERTEMP CONDITION EXISTS. PIC WILL SHUTDOWN HOIST. | NO EFFECT. | 3 |
| | | | a. FAILS SHORT | LOSS OF OVERTEMP SHUTDOWN PROTECTION. HNMTW WILL WARN OF OVERTEMP CONDITION. | NO EFFECT. | 3 |

Table 16 (Page 28 of 50). **ELECTRICAL FMEA - HOIST**

**System** 30-TON BRIDGE CRANE
**Subsystem** HOIST
**Drawing No.** EDERER EB-2286 **Sheet No.**
**PMN** H70-1379-01

**Program** SPACE SHUTTLE

**Station Set/Facility Code** GD
**Date** MARCH 1991
**Reference Figure Used**
**Prepared By** P. CLUKEY, LSOC 51-22

| FIND NO. PART NO. | PART NAME | PART FUNCTION | a. FAILURE MODE b. CAUSE c. FMN d. DETECTION METHOD e. CORRECTING ACTION f. TIME TO EFFECT g. TIMEFRAME | FAILURE EFFECT ON SYSTEM PERFORMANCE | FAILURE EFFECT ON VEHICLE SYSTEMS AND/OR PERSONNEL SAFETY | CRIT CAT |
|---|---|---|---|---|---|---|
| HNMTS 135101 | HOIST NORTH MOTOR OVERTEMP SHUTDOWN MODULE. (9N21) | MONITORS NORTH MOTOR OVERTEMP THERMISTOR AND CONTROLS OVERTEMP SHUTDOWN INDICATOR AND PIC INPUT <22-6>. | a. LOW OR NO OUTPUT | LOSS OF OVERTEMP SHUTDOWN PROTECTION AND INDICATION. HNMTW WILL WARN OF OVERTEMP CONDITION. | NO EFFECT. | 3 |
| | | | a. HIGH OR CONTINUOUS OUTPUT | HNMTS WILL SIGNAL PIC THAT OVERTEMP CONDITION EXISTS. PIC WILL SHUTDOWN HOIST. SHUTDOWN INDICATOR WILL BE ILLUMINATED. | NO EFFECT. | 3 |
| NONE 9001-KP-1R9 | HOIST NORTH OVERTEMP SHUTDOWN LIGHT (9S21) | INDICATES OVERTEMP CONDITION OF HOIST NORTH MOTOR. | a. FAILS OPEN | LOSS OF OVERTEMP INDICATION. PIC INPUT <22-6> WILL SIGNAL PIC OF OVERTEMP. PIC WILL SHUTDOWN HOIST. | NO EFFECT. | 3 |
| | | | a. FAILS SHORT | CURRENT OVERLOAD WILL BLOW FU19. HOIST CONTROLS WILL DE-ENERGIZE AND BRAKES WILL SET. | NO EFFECT. | 3 |
| NONE T8105 | MOTOR SOUTH WARNING THERMISTOR (9G24) | MEASURES THE TEMPERATURE OF THE HOIST SOUTH MOTOR. | a. FAILS OPEN | SOUTH HOIST MOTOR OVERTEMP WARNING LIGHT ON CONTINUOUSLY. | NO EFFECT. | 3 |
| | | | a. FAILS SHORT | LOSS OF OVERTEMP WARNING. HSMTS WILL SHUTDOWN HOIST IF OVERTEMP OCCURS. | NO EFFECT. | 3 |

Table 16 (Page 29 of 50). **ELECTRICAL FMEA - HOIST**

**System** 30-TON BRIDGE CRANE
**Subsystem** HOIST
**Drawing No.** EDERER EB-2286 **Sheet No.**
**PMN** H70-1379-01

**Program** SPACE SHUTTLE

**Station Set/Facility Code** GD
**Date** MARCH 1991
**Reference Figure Used**
**Prepared By** P. CLUKEY, LSOC 51-22

| FIND NO. PART NO. | PART NAME | PART FUNCTION | a. FAILURE MODE b. CAUSE c. FMN d. DETECTION METHOD e. CORRECTING ACTION f. TIME TO EFFECT g. TIMEFRAME | FAILURE EFFECT ON SYSTEM PERFORMANCE | FAILURE EFFECT ON VEHICLE SYSTEMS AND/OR PERSONNEL SAFETY | CRIT CAT |
|---|---|---|---|---|---|---|
| HSMTW 135101 | HOIST SOUTH MOTOR OVERTEMP WARNING MODULE (9G26) | MONITORS HOIST SOUTH OVERTEMP WARNING THERMISTOR AND CONTROLS SOUTH OVERTEMP WARNING LIGHT. | a. LOW OR NO OUTPUT | LOSS OF OVERTEMP WARNING. HSMTS WILL SHUTDOWN HOIST IF OVERTEMP OCCURS. | NO EFFECT. | 3 |
| | | | a. HIGH OR CONTINUOUS OUTPUT | SOUTH OVERTEMP WARNING LIGHT WILL BE ILLUMINATED CONTINUOUSLY. HOIST WILL OPERATE NORMALLY. | NO EFFECT. | 3 |
| NONE 9001-KP-1 | SOUTH HOIST OVERTEMP WARNING LIGHT (9S26) | INDICATES ABOVE NORMAL OPERATING TEMPERATURE. | a. FAILS OPEN | LOSS OF OVERTEMP WARNING. HSMTS WILL SHUTDOWN HOIST IF OVERTEMP OCCURS. | NO EFFECT. | 3 |
| | | | a. FAILS SHORT | CURRENT OVERLOAD WILL BLOW FU19. HOIST CONTROLS WILL DE-ENERGIZE AND BRAKES WILL SET. | NO EFFECT. | 3 |
| NONE T8135 | HOIST SOUTH MOTOR SHUTDOWN THERMISTOR (9N30) | MEASURES THE TEMPERATURE OF THE HOIST SOUTH MOTOR. | a. FAILS OPEN | HSMTS WILL SIGNAL PIC THAT OVERTEMP CONDITION EXISTS. PIC WILL SHUTDOWN HOIST. | NO EFFECT. | 3 |
| | | | a. FAILS SHORT | LOSS OF OVERTEMP SHUTDOWN PROTECTION. HSMTW WILL WARN OF OVERTEMP CONDITION. | NO EFFECT. | 3 |

Table 16 (Page 30 of 50). **ELECTRICAL FMEA - HOIST**

**System** 30-TON BRIDGE CRANE
**Subsystem** HOIST
**Drawing No.** EDERER EB-2286 **Sheet No.**
**PMN** H70-1379-01

**Program** SPACE SHUTTLE

**Station Set/Facility Code** GD
**Date** MARCH 1991
**Reference Figure Used**
**Prepared By** P. CLUKEY, LSOC 51-22

| FIND NO. PART NO. | PART NAME | PART FUNCTION | a. FAILURE MODE b. CAUSE c. FMN d. DETECTION METHOD e. CORRECTING ACTION f. TIME TO EFFECT g. TIMEFRAME | FAILURE EFFECT ON SYSTEM PERFORMANCE | FAILURE EFFECT ON VEHICLE SYSTEMS AND/OR PERSONNEL SAFETY | CRIT CAT |
|---|---|---|---|---|---|---|
| HSMTS 135101 | HOIST SOUTH MOTOR OVERTEMP SHUTDOWN MODULE. (9N28) | MONITORS SOUTH MOTOR OVERTEMP THERMISTOR AND CONTROLS OVERTEMP SHUTDOWN INDICATOR AND PIC INPUT < 22-6 > . | a. LOW OR NO OUTPUT | LOSS OF OVERTEMP SHUTDOWN PROTECTION AND INDICATION. HSMTW WILL WARN OF OVERTEMP CONDITION. | NO EFFECT. | 3 |
| | | | a. HIGH OR CONTINUOUS OUTPUT | HSMTS WILL SIGNAL PIC THAT OVERTEMP CONDITION EXISTS. PIC WILL SHUTDOWN HOIST. SHUTDOWN INDICATOR WILL BE ILLUMINATED. | NO EFFECT. | 3 |
| NONE 9001-KP-1R9 | HOIST SOUTH OVERTEMP SHUTDOWN LIGHT (9S28) | INDICATES OVERTEMP CONDITION OF HOIST SOUTH MOTOR. | a. FAILS OPEN | LOSS OF OVERTEMP INDICATION. PIC INPUT < 22-6 > WILL SIGNAL PIC OF OVERTEMP. PIC WILL SHUTDOWN HOIST. | NO EFFECT. | 3 |
| | | | a. FAILS SHORT | CURRENT OVERLOAD WILL BLOW FU19. HOIST CONTROLS WILL DE-ENERGIZE AND BRAKES WILL SET. | NO EFFECT. | 3 |
| NONE 9001-KP-1R9 | DRIVE LOAD IMBALANCE LIGHT (9S31) | INDICATES LOAD IMBALANCE BETWEEN NORTH AND SOUTH HOIST DRIVES. | a. FAILS OPEN | LOSS OF LOAD IMBALANCE INDICATION. PIC WILL SHUT DOWN HOIST AND SET BRAKES IF IMBALANCE OCCURS | NO EFFECT. | 3 |
| | | | a. FAILS SHORT | CURRENT OVERLOAD WILL BLOW FU19. HOIST CONTROLS WILL DE-ENERGIZE AND BRAKES WILL SET. | NO EFFECT. | 3 |
| NONE 36-302-761 | NORTH HOIST RESOLVER (10P10) | PROVIDES PHASE SHIFT TO AC SIGNAL PROPORTIONAL TO AMOUNT OF INPUT SHAFT ROTATION. | a. LOSS OF SIGNAL | PIC WILL DETECT LOSS OF RESOLVER SIGNAL, SHUT DOWN HOIST AND SET BRAKES, AND LIGHT COMPUTER ERROR LAMP ON CONTROL PANEL. | NO EFFECT. | 3 |

Table 16 (Page 31 of 50). **ELECTRICAL FMEA - HOIST**

System 30-TON BRIDGE CRANE
Subsystem HOIST
Drawing No. EDERER EB-2286 Sheet No.
PMN H70-1379-01

Program SPACE SHUTTLE

Station Set/Facility Code GD
Date MARCH 1991
Reference Figure Used
Prepared By P. CLUKEY, LSOC 51-22

| FIND NO. PART NO. | PART NAME | PART FUNCTION | a. FAILURE MODE<br>b. CAUSE<br>c. FMN<br>d. DETECTION METHOD<br>e. CORRECTING ACTION<br>f. TIME TO EFFECT<br>g. TIMEFRAME | FAILURE EFFECT ON SYSTEM PERFORMANCE | FAILURE EFFECT ON VEHICLE SYSTEMS AND/OR PERSONNEL SAFETY | CRIT CAT |
|---|---|---|---|---|---|---|
| | | | a. FAILS TO SHIFT PHASE | PIC WILL DETECT RESOLVER IMBALANCE, SHUT DOWN HOIST AND SET BRAKES, AND LIGHT COMPUTER ERROR LAMP ON CONTROL PANEL. | NO EFFECT. | 3 |
| NONE<br>36-302-761 | SOUTH HOIST RESOLVER (10P10) | PROVIDES PHASE SHIFT TO AC SIGNAL PROPORTIONAL TO AMOUNT OF INPUT SHAFT ROTATION. | a. LOSS OF SIGNAL | PIC WILL DETECT LOSS OF RESOLVER SIGNAL, SHUT DOWN HOIST AND SET BRAKES, AND LIGHT COMPUTER ERROR LAMP ON CONTROL PANEL. | NO EFFECT. | 3 |
| | | | a. FAILS TO SHIFT PHASE | PIC WILL DETECT RESOLVER IMBALANCE, SHUT DOWN HOIST AND SET BRAKES, AND LIGHT COMPUTER ERROR LAMP ON CONTROL PANEL. | NO EFFECT. | 3 |
| MOV<br>V320-LA20A | METAL OXIDE VARISTOR (4K3) | PROVIDES OVERVOLTAGE PROTECTION TO BRAKE CIRCUIT. | a. FAILS OPEN | LOSS OF OVERVOLTAGE PROTECTION TO HOIST BRAKE CIRCUIT. REQUIRES SECOND FAILURE IN POWER SUPPLY. | NO EFFECT. | 3 |
| | | | a. FAILS SHORT | HOIST BRAKE POWER FUSE WILL PROTECT HOIST BRAKE TRANSFORMER FROM OVERLOAD. | NO EFFECT. | 3 |
| HNRECT<br>ED1600B | HOIST NORTH RECTIFIER (4M2) | CONVERTS AC POWER TO DC POWER FOR HOIST BRAKE. | a. FAILS OPEN | HOIST BRAKES WILL (REMAIN) SET. HOIST WILL NOT RUN. | NO EFFECT. | 3 |
| | | | a. FAILS SHORT | EXCESSIVE CURRENT WILL BLOW FUSE PROTECTING HOIST BRAKE TRANSFORMER. HOIST BRAKES WILL (REMAIN) SET. HOIST WILL NOT RUN. | NO EFFECT. | 3 |
| NONE<br>NONE | RESISTOR 45.7Ω (4P2, 4P5) | CURRENT LIMITING RESISTORS FOR BRAKES. | a. FAILS OPEN | ASSOCIATED BRAKE WILL RELEASE FOR 5 SECONDS THEN SET WHEN HBF CONTACT OPENS. HOIST WILL NOT RUN CONTINUOUSLY. | NO EFFECT. | 3 |

Table 16 (Page 32 of 50). **ELECTRICAL FMEA - HOIST**

**System** 30-TON BRIDGE CRANE
**Subsystem** HOIST
**Drawing No.** EDERER EB-2286 **Sheet No.**
**PMN** H70-1379-01

**Program** SPACE SHUTTLE

**Station Set/Facility Code** GD
**Date** MARCH 1991
**Reference Figure Used**
**Prepared By** P. CLUKEY, LSOC 51-22

| FIND NO. PART NO. | PART NAME | PART FUNCTION | a. FAILURE MODE b. CAUSE c. FMN d. DETECTION METHOD e. CORRECTING ACTION f. TIME TO EFFECT g. TIMEFRAME | FAILURE EFFECT ON SYSTEM PERFORMANCE | FAILURE EFFECT ON VEHICLE SYSTEMS AND/OR PERSONNEL SAFETY | CRIT CAT |
|---|---|---|---|---|---|---|
| | | | a. FAILS SHORT | POSSIBLE DAMAGE TO ASSOCIATED BRAKE COIL FROM CONTINUOUS HIGH CURRENT. | NO EFFECT. | 3 |
| NONE NONE | RESISTOR 17.75Ω (4R2, 4R5) | CURRENT LIMITING RESISTORS FOR BRAKES. | a. FAILS OPEN | ASSOCIATED BRAKE WILL (REMAIN) SET. HOIST WILL NOT RUN. | NO EFFECT. | 3 |
| | | | a. FAILS SHORT | ASSOCIATED BRAKE COIL MAY OVERHEAT AND FAIL CAUSING BRAKE TO NOT RELEASE. | NO EFFECT. | 3 |
| NONE IC9528-C101 | HOIST NORTH MOTOR BRAKE (4U3) | PROVIDES TORQUE TO STOP/HOLD HOIST WHEN COIL IS ENERGIZED. | a. FAILS OPEN (COIL) | BRAKE WILL (REMAIN) SET. HOIST WILL NOT RUN. | NO EFFECT. | 3 |
| | | | a. FAILS SHORT (COIL) | EXCESSIVE CURRENT WILL CAUSE FUSE PROTECTING HBT TO BLOW. BRAKES WILL (REMAIN) SET. HOIST WILL NOT RUN. | NO EFFECT. | 3 |
| NONE IC9528-C101 | HOIST SOUTH MOTOR BRAKE (5S3) | PROVIDES TORQUE TO STOP/HOLD HOIST WHEN COIL IS ENERGIZED. | a. FAILS OPEN (COIL) | BRAKE WILL (REMAIN) SET. HOIST WILL NOT RUN. | NO EFFECT. | 3 |
| | | | a. FAILS SHORT (COIL) | EXCESSIVE CURRENT WILL CAUSE FUSE PROTECTING HBT TO BLOW. BRAKES WILL (REMAIN) SET. HOIST WILL NOT RUN. | NO EFFECT. | 3 |
| HNCB TED1340-60WL | HOIST NORTH CIRCUIT BREAKER (4D3) | PROTECTS MAIN POWER LINE FROM OVERLOAD IN NORTH HOIST DRIVE CIRCUIT. | a. PREMATURE OPERATION | LOSS OF POWER TO HOIST NORTH DRIVE CIRCUIT. PIC WILL DETECT DRIVE NOT READY AND SHUT DOWN HOIST. | NO EFFECT. | 3 |

Table 16 (Page 33 of 50). **ELECTRICAL FMEA - HOIST**

**System** 30-TON BRIDGE CRANE
**Subsystem** HOIST
**Drawing No.** EDERER EB-2286 **Sheet No.**
**PMN** H70-1379-01

**Program** SPACE SHUTTLE

**Station Set/Facility Code** GD
**Date** MARCH 1991
**Reference Figure Used**
**Prepared By** P. CLUKEY, LSOC 51-22

| FIND NO. PART NO. | PART NAME | PART FUNCTION | a. FAILURE MODE b. CAUSE c. FMN d. DETECTION METHOD e. CORRECTING ACTION f. TIME TO EFFECT g. TIMEFRAME | FAILURE EFFECT ON SYSTEM PERFORMANCE | FAILURE EFFECT ON VEHICLE SYSTEMS AND/OR PERSONNEL SAFETY | CRIT CAT |
|---|---|---|---|---|---|---|
| | | | a. FAILURE TO OPERATE | POSSIBLE DAMAGE TO 480 V POWER SUPPLY. REQUIRES PREVIOUS FAILURE IN HOIST NORTH DRIVE CIRCUIT. | NO EFFECT. | 3 |
| HNIT 9T23Q4-004G32 | HOIST NORTH ISO-LATION TRANS-FORMER (4D6) | ISOLATES HOIST NORTH DRIVE CIRCUIT FROM 480 V MAIN POWER SUPPLY. | a. FAILS OPEN | HNFSA WILL DETECT ERRONEOUS VOLTAGE AND SHUT DOWN NORTH HOIST DRIVE. PIC WILL DETECT DRIVE FAILURE AND SHUT DOWN HOIST. | NO EFFECT. | 3 |
| | | | a. FAILS SHORT | HNFSA WILL DETECT ERRONEOUS VOLTAGE AND SHUT DOWN NORTH HOIST DRIVE OR EXCESSIVE CURRENT WILL TRIP HNCB SHUTTING DOWN HOIST NORTH DRIVE. | NO EFFECT. | 3 |
| HFU1, 2, 3 FRSR1-8/10 | HOIST FUSE 1, 2, AND 3 (4F7, 4F8, 4F9) | PROTECT HOIST NORTH POWER FROM OVERLOADS IN HOIST NORTH BLOWER MOTOR CIRCUIT. | a. PREMATURE OPERATION | HOIST NORTH MOTOR BLOWER WILL ATTEMPT TO RUN. HNBOL WILL SHUT DOWN BLOWER WHEN BLOWER GETS HOT. | NO EFFECT. | 3 |
| | | | a. FAILS TO OPERATE | ASSOCIATED FUSE WILL PROTECT AGAINST OVERLOAD. REQUIRES PRE-VIOUS FAILURE. | NO EFFECT. | 3 |
| HNBOL NONE | HOIST NORTH BLOWER OVERLOAD RELAY (4J8) | DETECTS OVERLOADS IN HOIST NORTH BLOWER CIRCUIT. | a. FAILS DEACTIVATED (ANY ONE OF THREE PHASES) | ASSOCIATED PHASE WILL DETECT OVERLOAD | NO EFFECT. | 3 |
| | CONTACT (8R25) | CONTACT OPENS TO DE-ENERGIZE HNBS RELAY. | a. FAILS OPEN | HOIST NORTH BLOWER MOTOR WILL NOT RUN. HOIST NORTH MOTOR MAY GET HOT. HNMTW AND HNMTS WILL PROTECT AGAINST OVERTEMP CONDI-TION. | NO EFFECT. | 3 |

Table 16 (Page 34 of 50). **ELECTRICAL FMEA - HOIST**

**System** 30-TON BRIDGE CRANE
**Subsystem** HOIST
**Drawing No.** EDERER EB-2286 **Sheet No.**
**PMN** H70-1379-01

**Program** SPACE SHUTTLE

**Station Set/Facility Code** GD
**Date** MARCH 1991
**Reference Figure Used**
**Prepared By** P. CLUKEY, LSOC 51-22

| FIND NO. PART NO. | PART NAME | PART FUNCTION | a. FAILURE MODE b. CAUSE c. FMN d. DETECTION METHOD e. CORRECTING ACTION f. TIME TO EFFECT g. TIMEFRAME | FAILURE EFFECT ON SYSTEM PERFORMANCE | FAILURE EFFECT ON VEHICLE SYSTEMS AND/OR PERSONNEL SAFETY | CRIT CAT |
|---|---|---|---|---|---|---|
| | | | a. FAILS CLOSED | HNBOL WILL NOT SHUT DOWN HOIST NORTH BLOWER MOTOR WHEN OVER-LOAD OCCURS. REQUIRES DOUBLE FAILURE. | NO EFFECT. | 3 |
| NONE NONE | HOIST NORTH BLOWER MOTOR (4N8) | DRIVES FAN PROVIDING COOLING AIR TO HOIST NORTH MOTOR. | a. FAILS OPEN (ANY ONE OF THREE PHASES) | HOIST NORTH BLOWER MOTOR WILL ATTEMPT TO RUN. HNBOL WILL SHUT DOWN BLOWER WHEN BLOWER GETS HOT. | NO EFFECT. | 3 |
| | | | a. FAILS SHORT (ANY ONE OF THREE PHASES) | ASSOCIATED FUSE WILL PROTECT HOIST NORTH POWER SUPPLY. HOIST NORTH BLOWER MOTOR WILL ATTEMPT TO RUN. HNBOL WILL SHUT DOWN BLOWER WHEN BLOWER GETS HOT. | NO EFFECT. | 3 |
| HNOL | HOIST NORTH OVERLOAD RELAY (4V9) | DETECTS OVERLOADS IN THE HOIST NORTH MOTOR ARMA-TURE CURRENT LOOP. | a. FAILS DEACTIVATED | PIC WILL DETECT LOAD IMBALANCE BETWEEN HOIST NORTH AND HOIST SOUTH MOTORS AND SHUT DOWN HOIST. | NO EFFECT. | 3 |
| | CONTACT (9T8) | OPENS TO DE-ENERGIZE HNR RELAY. | a. FAILS OPEN | HOIST NORTH MOTOR WILL BE DISA-BLED. PIC WILL DETECT LOAD IMBAL-ANCE AND SHUT DOWN HOIST. | NO EFFECT. | 3 |
| | | | a. FAILS CLOSED | PIC WILL DETECT LOAD IMBALANCE BETWEEN HOIST NORTH AND HOIST SOUTH MOTORS AND SHUT DOWN HOIST. | NO EFFECT. | 3 |
| N SHUNT NONE | HOIST NORTH MOTOR AMMETER SHUNT (4X9) | PROVIDE CIRCUIT FOR HOIST NORTH MOTOR CURRENT WHILE SOME CURRENT THROUGH AMMETER. | a. FAILS OPEN | FULL HOIST NORTH MOTOR CURRENT WILL RUN THROUGH HNAM UNTIL FUSE PROTECTING AMMETER BLOWS. | NO EFFECT. | 3 |

Table 16 (Page 35 of 50). **ELECTRICAL FMEA - HOIST**

**System** 30-TON BRIDGE CRANE
**Subsystem** HOIST
**Drawing No.** EDERER EB-2286 **Sheet No.**
**PMN** H70-1379-01

**Program** SPACE SHUTTLE

**Station Set/Facility Code** GD
**Date** MARCH 1991
**Reference Figure Used**
**Prepared By** P. CLUKEY, LSOC 51-22

| FIND NO. PART NO. | PART NAME | PART FUNCTION | a. FAILURE MODE b. CAUSE c. FMN d. DETECTION METHOD e. CORRECTING ACTION f. TIME TO EFFECT g. TIMEFRAME | FAILURE EFFECT ON SYSTEM PERFORMANCE | FAILURE EFFECT ON VEHICLE SYSTEMS AND/OR PERSONNEL SAFETY | CRIT CAT |
|---|---|---|---|---|---|---|
| | | | a. FAILS SHORT | HOIST NORTH MOTOR CURRENT WILL BYPASS HNAM. NO CURRENT WILL BE INDICATED ON HNAM. | NO EFFECT. | 3 |
| FU13, 14 KTK2 | FUSES (4X7, 4X7) | PROTECT HOIST NORTH MOTOR AMMETER FROM OVERCURRENT. | a. PREMATURE OPERATION | HNAM WILL NOT INDICATE CURRENT THROUGH HOIST NORTH MOTOR ARMATURE. | NO EFFECT. | 3 |
| | | | a. FAILS TO OPERATE | OPPOSING FUSE WILL PROTECT HNAM FROM OVERCURRENT. | NO EFFECT. | 3 |
| HNAM 016-01-CA-ECPK | HOIST NORTH AMMETER (4X5) | INDICATES ARMATURE CURRENT IN HOIST NORTH MOTOR. | a. FAILS OPEN | HNAM WILL NOT INDICATE CURRENT THROUGH HOIST NORTH MOTOR ARMATURE. | NO EFFECT. | 3 |
| | | | a. FAILS SHORT | FU13 OR FU14 WILL BLOW FROM EXCESSIVE CURRENT. HNAM WILL NOT INDICATE CURRENT THROUGH HOIST NORTH MOTOR ARMATURE. | NO EFFECT. | 3 |
| NONE 2813AT | HOIST NORTH MOTOR (4Y12) | PROVIDES TORQUE TO DRIVE HOIST. | a. FAILS OPEN | HOIST NORTH MOTOR WILL NOT PROVIDE TORQUE TO DRIVE HOIST. PIC WILL DETECT LOAD IMBALANCE AND SHUT DOWN HOIST. | NO EFFECT. | 3 |
| | | | a. FAILS SHORT | OVERCURRENT CIRCUIT IN HNMCM WILL SHUT DOWN POWER TO MOTOR. PIC WILL DETECT LOAD IMBALANCE AND SHUT DOWN HOIST. | NO EFFECT. | 3 |
| NONE NONE | HOIST NORTH MOTOR FIELD COILS (4V17) | PROVIDE FIELD FLUX FOR MOTOR ARMATURE TO WORK AGAINST. | a. FAILS OPEN | HNMCM WILL DETECT FIELD LOSS AND SHUT DOWN HOIST NORTH MOTOR. PIC WILL DETECT LOAD IMBALANCE AND SHUT DOWN HOIST. | NO EFFECT. | 3 |

Table 16 (Page 36 of 50). **ELECTRICAL FMEA - HOIST**

System 30-TON BRIDGE CRANE
Subsystem HOIST
Drawing No. EDERER EB-2286 Sheet No.
PMN H70-1379-01

Program SPACE SHUTTLE

Station Set/Facility Code GD
Date MARCH 1991
Reference Figure Used
Prepared By P. CLUKEY, LSOC 51-22

| FIND NO. PART NO. | PART NAME | PART FUNCTION | a. FAILURE MODE<br>b. CAUSE<br>c. FMN<br>d. DETECTION METHOD<br>e. CORRECTING ACTION<br>f. TIME TO EFFECT<br>g. TIMEFRAME | FAILURE EFFECT ON SYSTEM PERFORMANCE | FAILURE EFFECT ON VEHICLE SYSTEMS AND/OR PERSONNEL SAFETY | CRIT CAT |
|---|---|---|---|---|---|---|
| | | | a. FAILS SHORT | FUSES IN HNMCM WILL PROTECT HNMCM AND WIRING AGAINST SHORT/OVERLOAD. PIC WILL DETECT LOAD IMBALANCE AND SHUT DOWN HOIST. | NO EFFECT. | 3 |
| NONE<br>NONE | FAULT RESISTORS 0.35Ω (4F16) | PROVIDE VOLTAGE DROP FOR HNFSA. | a. FAILS OPEN | ABSENCE OF VOLTAGE WILL BE DETECTED BY HNFSA. HNMCM WILL BE DISABLED. | NO EFFECT. | 3 |
| | | | a. FAILS SHORT | ABNORMAL VOLTAGE WILL BE DETECTED BY HNFSA. HNMCM WILL BE DISABLED. | NO EFFECT. | 3 |
| HNSRA<br>0003721 | HOIST NORTH SCALING RESISTOR ASSEMBLY 1.24MΩ (4G20) | REDUCE VOLTAGE FROM FAULT RESISTORS TO CONFORM TO HNFSA CIRCUITRY. | a. FAILS OPEN | ABSENCE OF VOLTAGE WILL BE DETECTED BY HNFSA. HNMCM WILL BE DISABLED. | NO EFFECT. | 3 |
| | | | a. FAILS CLOSED | ABNORMAL VOLTAGE WILL BE DETECTED BY HNFSA. HNMCM WILL BE DISABLED. | NO EFFECT. | 3 |
| HNRDY<br>KRPA11-DG24 | HOIST NORTH READY RELAY (4C25) | DE-ENERGIZES WHEN HNFSA DETECTS A LINE FAULT. | a. FAILS DEACTIVATED | HNR RELAY WILL NOT BE ENERGIZED. HOIST NORTH DRIVE WILL NOT BE ENABLED. HOIST WILL NOT RUN. | NO EFFECT. | 3 |
| | CONTACT (9H8) | CLOSES TO ENERGIZE HNR RELAY. | a. FAILS OPEN | HNR RELAY WILL NOT BE ENERGIZED. HOIST NORTH DRIVE WILL NOT BE ENABLED. HOIST WILL NOT RUN. | NO EFFECT. | 3 |

Table 16 (Page 37 of 50). **ELECTRICAL FMEA - HOIST**

**System** 30-TON BRIDGE CRANE
**Subsystem** HOIST
**Drawing No.** EDERER EB-2286 **Sheet No.**
**PMN** H70-1379-01

**Program** SPACE SHUTTLE

**Station Set/Facility Code** GD
**Date** MARCH 1991
**Reference Figure Used**
**Prepared By** P. CLUKEY, LSOC 51-22

| FIND NO. PART NO. | PART NAME | PART FUNCTION | a. FAILURE MODE b. CAUSE c. FMN d. DETECTION METHOD e. CORRECTING ACTION f. TIME TO EFFECT g. TIMEFRAME | FAILURE EFFECT ON SYSTEM PERFORMANCE | FAILURE EFFECT ON VEHICLE SYSTEMS AND/OR PERSONNEL SAFETY | CRIT CAT |
|---|---|---|---|---|---|---|
| HNFSA 0001802 | HOIST NORTH FAULT SENSE ASSEMBLY (4G25) | MONITOR HOIST NORTH MOTOR CURRENT FOR ABNORMAL CONDITIONS. | a. FAILS CLOSED | HNR RELAY WILL NOT DISABLE HOIST NORTH CONTROL CIRCUIT WHEN LINE FAULT OCCURS. REQUIRES DOUBLE FAILURE. | NO EFFECT. | 3 |
| | J1-6 | PROVIDE GROUND FOR HNRDY RELAY. | a. FAILS HIGH | HNRDY RELAY WILL NOT ENERGIZE. HOIST NORTH DRIVE WILL NOT RUN. | NO EFFECT. | 3 |
| | | | a. FAILS LOW | HNRDY WILL REMAIN ENERGIZED IF LINE FAULT OCCURS. HNFSA WILL DISABLE HNMCM. DOUBLE FAILURE REQUIRED. | NO EFFECT. | 3 |
| | J2-11 | PROVIDE RESET SIGNAL TO HNMCM. | a. FAILS HIGH | RESET SIGNAL WILL NOT REACH HNMCM. HOSR CONTACT WILL TRIP MCB, SHUTTING DOWN CRANE. | NO EFFECT. | 3 |
| | | | a. FAILS LOW | LOW RESET SIGNAL WILL DISABLE HNMCM. HOIST NORTH DRIVE WILL NOT RUN. | NO EFFECT. | 3 |
| | J2-12 | PROVIDE ENABLE SIGNAL TO HNMCM. | a. FAILS HIGH | HNFSA WILL NOT ENABLE HNMCM. HOIST NORTH DRIVE WILL NOT RUN. | NO EFFECT. | 3 |
| | | | a. FAILS LOW | LINE FAULT WILL DE-ENERGIZE HNRDY RELAY. HOIST NORTH DRIVE WILL NOT RUN. | NO EFFECT. | 3 |

Table 16 (Page 38 of 50). **ELECTRICAL FMEA - HOIST**

**System** 30-TON BRIDGE CRANE
**Subsystem** HOIST
**Drawing No.** EDERER EB-2286 **Sheet No.**
**PMN** H70-1379-01

**Program** SPACE SHUTTLE

**Station Set/Facility Code** GD
**Date** MARCH 1991
**Reference Figure Used**
**Prepared By** P. CLUKEY, LSOC 51-22

| FIND NO. PART NO. | PART NAME | PART FUNCTION | a. FAILURE MODE b. CAUSE c. FMN d. DETECTION METHOD e. CORRECTING ACTION f. TIME TO EFFECT g. TIMEFRAME | FAILURE EFFECT ON SYSTEM PERFORMANCE | FAILURE EFFECT ON VEHICLE SYSTEMS AND/OR PERSONNEL SAFETY | CRIT CAT |
|---|---|---|---|---|---|---|
| HNMCM MODEL 842 | HOIST NORTH MOTOR CONTROL MODULE (4Q20) | PROVIDE AND CONTROL ARMATURE AND FIELD CURRENTS TO HOIST NORTH MOTOR. | | | | |
| | J2-3 | SENDS HNMCM READY SIGNAL TO HNFSA. | a. FAILS HIGH | HNFSA WILL NOT ENABLE HNMCM. HOIST NORTH DRIVE WILL NOT RUN. | NO EFFECT. | 3 |
| | | | a. FAILS LOW | HNMCM WILL CONTINUOUSLY SEND READY SIGNAL WHEN A FAULT EXISTS. REQUIRES PREVIOUS FAILURE. | NO EFFECT. | 3 |
| | J2-4 | SUPPLY +25 VOLTS TO HNFSA. | a. LOW OR NO OUTPUT | HNRDY RELAY MAY NOT ENERGIZE HOIST NORTH DRIVE CIRCUIT. HOIST NORTH DRIVE MAY NOT RUN. | NO EFFECT. | 3 |
| | | | a. FAILS HIGH | EXCESSIVE VOLTAGE MAY DAMAGE COMPONENTS CAUSING HOIST NORTH DRIVE TO NOT RUN. | NO EFFECT. | 3 |
| | J1-3 | SUPPLY -15 VOLTS TO HNFSA CIRCUITRY. | a. FAILS HIGH OR NO OUTPUT | HNFSA MAY NOT DETECT LINE FAULT AND DISABLE HNMCM. REQUIRES DOUBLE FAILURE. | NO EFFECT. | 3 |
| | | | a. LOW OUTPUT | HNFSA MAY NOT DETECT LINE FAULT AND DISABLE HNMCM. REQUIRES DOUBLE FAILURE. | NO EFFECT. | 3 |
| | J1-4 | SUPPLY +15 VOLTS TO HNFSA CIRCUITRY. | a. LOW OR NO OUTPUT | LOSS OF POWER TO HNFSA CIRCUITRY. HNFSA WILL NOT ENABLE HNMCM. | NO EFFECT. | 3 |
| | | | a. HIGH OUTPUT | HNFSA MAY NOT DETECT LINE FAULT AND DISABLE HNMCM. REQUIRES DOUBLE FAILURE. | NO EFFECT. | 3 |

Table 16 (Page 39 of 50). **ELECTRICAL FMEA - HOIST**

System 30-TON BRIDGE CRANE
Subsystem HOIST
Drawing No. EDERER EB-2286 Sheet No.
PMN H70-1379-01

Program SPACE SHUTTLE

Station Set/Facility Code GD
Date MARCH 1991
Reference Figure Used
Prepared By P. CLUKEY, LSOC 51-22

| FIND NO. PART NO. | PART NAME | PART FUNCTION | a. FAILURE MODE b. CAUSE c. FMN d. DETECTION METHOD e. CORRECTING ACTION f. TIME TO EFFECT g. TIMEFRAME | FAILURE EFFECT ON SYSTEM PERFORMANCE | FAILURE EFFECT ON VEHICLE SYSTEMS AND/OR PERSONNEL SAFETY | CRIT CAT |
|---|---|---|---|---|---|---|
| | J1-12 | SUPPLIES HOIST NORTH MOTOR ARMATURE FEED-BACK TO PIC. | a. FAILS LOW OR NO OUTPUT | TORQUE MAY NOT BE PROVED OR PIC WILL DETECT LOAD IMBALANCE AND SHUT DOWN HOIST. | NO EFFECT. | 3 |
| | | | a. HIGH OUTPUT | PIC WILL DETECT LOAD IMBALANCE AND SHUT DOWN HOIST. | NO EFFECT. | 3 |
| | F1, F2 | PROVIDES CURRENT FOR HOIST NORTH MOTOR FIELDS. | a. FAILS LOW OR NO OUTPUT | HNMCM FIELD LOSS CIRCUIT WILL DETECT ABNORMAL OUTPUT AND REMOVE READY INDICATION TO HNFSA. | NO EFFECT. | 3 |
| | | | a. HIGH OUTPUT | OUTPUT IS LIMITED BY FIELD OUTPUT CIRCUIT AND HIM CONTROL CIRCUIT. DOUBLE FAILURE REQUIRED. | NO EFFECT. | 3 |
| | A1, A2 | PROVIDES ARMATURE CURRENT FOR HOIST NORTH MOTOR. | a. FAILS LOW OR NO OUTPUT | PIC WILL DETECT LOAD IMBALANCE AND SHUT DOWN HOIST. | NO EFFECT. | 3 |
| | | | a. HIGH OUTPUT | PIC WILL DETECT LOAD IMBALANCE AND SHUT DOWN HOIST. | NO EFFECT. | 3 |
| HSCB TED1340-60WL | HOIST SOUTH CIRCUIT BREAKER (5D3) | PROTECTS MAIN POWER LINE FROM OVERLOAD IN SOUTH HOIST DRIVE CIRCUIT. | a. PREMATURE OPERATION | LOSS OF POWER TO HOIST SOUTH DRIVE CIRCUIT. PIC WILL DETECT DRIVE NOT READY AND SHUT DOWN HOIST. | NO EFFECT. | 3 |
| | | | a. FAILURE TO OPERATE | POSSIBLE DAMAGE TO 480 V POWER SUPPLY. REQUIRES PREVIOUS FAILURE IN HOIST SOUTH DRIVE CIRCUIT. | NO EFFECT. | 3 |
| HSIT 9T23Q4-004G32 | HOIST SOUTH ISO-LATION TRANS-FORMER (5D6) | ISOLATES HOIST SOUTH DRIVE CIRCUIT FROM 480 V MAIN POWER SUPPLY. | a. FAILS OPEN | HSFSA WILL DETECT ERRONEOUS VOLTAGE AND SHUT DOWN SOUTH HOIST DRIVE. PIC WILL DETECT DRIVE FAILURE AND SHUT DOWN HOIST. | NO EFFECT. | 3 |

Table 16 (Page 40 of 50). **ELECTRICAL FMEA - HOIST**

System 30-TON BRIDGE CRANE
Subsystem HOIST
Drawing No. EDERER EB-2286 Sheet No.
PMN H70-1379-01

Program SPACE SHUTTLE

Station Set/Facility Code GD
Date MARCH 1991
Reference Figure Used
Prepared By P. CLUKEY, LSOC 51-22

| FIND NO. PART NO. | PART NAME | PART FUNCTION | a. FAILURE MODE<br>b. CAUSE<br>c. FMN<br>d. DETECTION METHOD<br>e. CORRECTING ACTION<br>f. TIME TO EFFECT<br>g. TIMEFRAME | FAILURE EFFECT ON SYSTEM PERFORMANCE | FAILURE EFFECT ON VEHICLE SYSTEMS AND/OR PERSONNEL SAFETY | CRIT CAT |
|---|---|---|---|---|---|---|
| | | | a. FAILS SHORT | HSFSA WILL DETECT ERRONEOUS VOLTAGE AND SHUT DOWN SOUTH HOIST DRIVE OR EXCESSIVE CURRENT WILL TRIP HSCB SHUTTING DOWN HOIST SOUTH DRIVE. | NO EFFECT. | 3 |
| HFU4, 5, 6<br>FRSR1-8/10 | HOIST FUSE 4, 5, AND 6 (5F7, 5F8, 5F9) | PROTECT HOIST SOUTH POWER FROM OVERLOADS IN HOIST SOUTH BLOWER MOTOR CIRCUIT. | a. PREMATURE OPERATION | HOIST SOUTH MOTOR BLOWER WILL ATTEMPT TO RUN. HSBOL WILL SHUT DOWN BLOWER WHEN BLOWER GETS HOT. | NO EFFECT. | 3 |
| | | | a. FAILS TO OPERATE | ASSOCIATED FUSE WILL PROTECT AGAINST OVERLOAD. REQUIRES PREVIOUS FAILURE. | NO EFFECT. | 3 |
| HSBOL<br>NONE | HOIST SOUTH BLOWER OVERLOAD RELAY (5J8) | DETECTS OVERLOADS IN HOIST SOUTH BLOWER CIRCUIT. | a. FAILS DEACTIVATED (ANY ONE OF THREE PHASES) | ASSOCIATED PHASE WILL DETECT OVERLOAD. | NO EFFECT. | 3 |
| | CONTACT (8R27) | CONTACT OPENS TO DE-ENERGIZE HSBS RELAY. | a. FAILS OPEN | HOIST SOUTH BLOWER MOTOR WILL NOT RUN. HOIST SOUTH MOTOR MAY GET HOT. HSMTW AND HSMTS WILL PROTECT AGAINST OVERTEMP CONDITION. | NO EFFECT. | 3 |
| | | | a. FAILS CLOSED | HSBOL WILL NOT SHUT DOWN HOIST SOUTH BLOWER MOTOR WHEN OVERLOAD OCCURS. REQUIRES DOUBLE FAILURE. | NO EFFECT. | 3 |
| NONE<br>NONE | HOIST SOUTH BLOWER MOTOR (5N8) | DRIVES FAN PROVIDING COOLING AIR TO HOIST SOUTH MOTOR. | a. FAILS OPEN (ANY ONE OF THREE PHASES) | HOIST SOUTH BLOWER MOTOR WILL ATTEMPT TO RUN. HSBOL WILL SHUT DOWN BLOWER WHEN BLOWER GETS HOT. | NO EFFECT. | 3 |

Table 16 (Page 41 of 50). **ELECTRICAL FMEA - HOIST**

**System** 30-TON BRIDGE CRANE
**Subsystem** HOIST
**Drawing No.** EDERER EB-2286 **Sheet No.**
**PMN** H70-1379-01

**Program** SPACE SHUTTLE

**Station Set/Facility Code** GD
**Date** MARCH 1991
**Reference Figure Used**
**Prepared By** P. CLUKEY, LSOC 51-22

| FIND NO. PART NO. | PART NAME | PART FUNCTION | a. FAILURE MODE b. CAUSE c. FMN d. DETECTION METHOD e. CORRECTING ACTION f. TIME TO EFFECT g. TIMEFRAME | FAILURE EFFECT ON SYSTEM PERFORMANCE | FAILURE EFFECT ON VEHICLE SYSTEMS AND/OR PERSONNEL SAFETY | CRIT CAT |
|---|---|---|---|---|---|---|
| | | | a. FAILS SHORT (ANY ONE OF THREE PHASES) | ASSOCIATED FUSE WILL PROTECT HOIST SOUTH POWER SUPPLY. HOIST SOUTH BLOWER MOTOR WILL ATTEMPT TO RUN. HSBOL WILL SHUT DOWN BLOWER WHEN BLOWER GETS HOT. | NO EFFECT. | 3 |
| HSOL | HOIST SOUTH OVERLOAD RELAY (5V9) | DETECTS OVERLOADS IN THE HOIST SOUTH MOTOR ARMATURE CURRENT LOOP. | a. FAILS DEACTIVATED | PIC WILL DETECT LOAD IMBALANCE BETWEEN HOIST NORTH AND HOIST SOUTH MOTORS AND SHUT DOWN HOIST. | NO EFFECT. | 3 |
| | CONTACT (9T9) | OPENS TO DE-ENERGIZE HSR RELAY. | a. FAILS OPEN | HOIST SOUTH MOTOR WILL BE DISABLED. PIC WILL DETECT LOAD IMBALANCE AND SHUT DOWN HOIST. | NO EFFECT. | 3 |
| | | | a. FAILS CLOSED | PIC WILL DETECT LOAD IMBALANCE BETWEEN HOIST NORTH AND HOIST SOUTH MOTORS AND SHUT DOWN HOIST. | NO EFFECT. | 3 |
| S SHUNT NONE | HOIST SOUTH MOTOR AMMETER SHUNT (5X9) | PROVIDE CIRCUIT FOR HOIST SOUTH MOTOR CURRENT WHILE SOME CURRENT THROUGH AMMETER. | a. FAILS OPEN | FULL HOIST SOUTH MOTOR CURRENT WILL RUN THROUGH HSAM UNTIL FUSE PROTECTING AMMETER BLOWS. | NO EFFECT. | 3 |
| | | | a. FAILS SHORT | HOIST SOUTH MOTOR CURRENT WILL BYPASS HSAM. NO CURRENT WILL BE INDICATED ON HSAM. | NO EFFECT. | 3 |
| FU15,16 KTK2 | FUSES (5X7, 5X7) | PROTECT HOIST SOUTH MOTOR AMMETER FROM OVERCURRENT. | a. PREMATURE OPERATION | HSAM WILL NOT INDICATE CURRENT THROUGH HOIST SOUTH MOTOR ARMATURE. | NO EFFECT. | 3 |
| | | | a. FAILS TO OPERATE | OPPOSING FUSE WILL PROTECT HSAM FROM OVERCURRENT. | NO EFFECT. | 3 |

Table 16 (Page 42 of 50). **ELECTRICAL FMEA - HOIST**

**System** 30-TON BRIDGE CRANE
**Subsystem** HOIST
**Drawing No.** EDERER EB-2286 **Sheet No.**
**PMN** H70-1379-01

**Program** SPACE SHUTTLE

**Station Set/Facility Code** GD
**Date** MARCH 1991
**Reference Figure Used**
**Prepared By** P. CLUKEY, LSOC 51-22

| FIND NO. PART NO. | PART NAME | PART FUNCTION | a. FAILURE MODE b. CAUSE c. FMN d. DETECTION METHOD e. CORRECTING ACTION f. TIME TO EFFECT g. TIMEFRAME | FAILURE EFFECT ON SYSTEM PERFORMANCE | FAILURE EFFECT ON VEHICLE SYSTEMS AND/OR PERSONNEL SAFETY | CRIT CAT |
|---|---|---|---|---|---|---|
| HSAM 016-01-CA-ECPK | HOIST SOUTH AMMETER (5X5) | INDICATES ARMATURE CURRENT IN HOIST SOUTH MOTOR. | a. FAILS OPEN | HSAM WILL NOT INDICATE CURRENT THROUGH HOIST SOUTH MOTOR ARMATURE. | NO EFFECT. | 3 |
| | | | a. FAILS SHORT | FU15 OR FU16 WILL BLOW FROM EXCESSIVE CURRENT. HSAM WILL NOT INDICATE CURRENT THROUGH HOIST SOUTH MOTOR ARMATURE. | NO EFFECT. | 3 |
| NONE 2813AT | HOIST SOUTH MOTOR (5Y12) | PROVIDES TORQUE TO DRIVE HOIST. | a. FAILS OPEN | HOIST SOUTH MOTOR WILL NOT PROVIDE TORQUE TO DRIVE HOIST. PIC WILL DETECT LOAD IMBALANCE AND SHUT DOWN HOIST. | NO EFFECT. | 3 |
| | | | a. FAILS SHORT | OVERCURRENT CIRCUIT IN HSMCM WILL SHUT DOWN POWER TO MOTOR. PIC WILL DETECT LOAD IMBALANCE AND SHUT DOWN HOIST. | NO EFFECT. | 3 |
| NONE NONE | HOIST SOUTH MOTOR FIELD COILS (5V17) | PROVIDE FIELD FLUX FOR MOTOR ARMATURE TO WORK AGAINST. | a. FAILS OPEN | HSMCM WILL DETECT FIELD LOSS AND SHUT DOWN HOIST SOUTH MOTOR. PIC WILL DETECT LOAD IMBALANCE AND SHUT DOWN HOIST. | NO EFFECT. | 3 |
| | | | a. FAILS SHORT | FUSES IN HSMCM WILL PROTECT HSMCM AND WIRING AGAINST SHORT/OVERLOAD. PIC WILL DETECT LOAD IMBALANCE AND SHUT DOWN HOIST. | NO EFFECT. | 3 |
| NONE NONE | FAULT RESISTORS 0.35Ω (5F16) | PROVIDE VOLTAGE DROP FOR HSFSA. | a. FAILS OPEN | ABSENCE OF VOLTAGE WILL BE DETECTED BY HSFSA. HSMCM WILL BE DISABLED. | NO EFFECT. | 3 |
| | | | a. FAILS SHORT | ABNORMAL VOLTAGE WILL BE DETECTED BY HSFSA. HSMCM WILL BE DISABLED. | NO EFFECT. | 3 |

Table 16 (Page 43 of 50). **ELECTRICAL FMEA - HOIST**

**System** 30-TON BRIDGE CRANE
**Subsystem** HOIST
**Drawing No.** EDERER EB-2286 **Sheet No.**
**PMN** H70-1379-01

**Program** SPACE SHUTTLE

**Station Set/Facility Code** GD
**Date** MARCH 1991
**Reference Figure Used**
**Prepared By** P. CLUKEY, LSOC 51-22

| FIND NO. PART NO. | PART NAME | PART FUNCTION | a. FAILURE MODE<br>b. CAUSE<br>c. FMN<br>d. DETECTION METHOD<br>e. CORRECTING ACTION<br>f. TIME TO EFFECT<br>g. TIMEFRAME | FAILURE EFFECT ON SYSTEM PERFORMANCE | FAILURE EFFECT ON VEHICLE SYSTEMS AND/OR PERSONNEL SAFETY | CRIT CAT |
|---|---|---|---|---|---|---|
| HSSRA 0003721 | HOIST SOUTH SCALING RESISTOR ASSEMBLY 1.24MΩ (5G20) | REDUCE VOLTAGE FROM FAULT RESISTORS TO CONFORM TO HSFSA CIRCUITRY. | a. FAILS OPEN | ABSENCE OF VOLTAGE WILL BE DETECTED BY HSFSA. HSMCM WILL BE DISABLED. | NO EFFECT. | 3 |
| | | | a. FAILS CLOSED | ABNORMAL VOLTAGE WILL BE DETECTED BY HSFSA. HSMCM WILL BE DISABLED. | NO EFFECT. | 3 |
| HSRDY KRPA11-DG24 | HOIST SOUTH READY RELAY (5C25) | DE-ENERGIZES WHEN HSFSA DETECTS A LINE FAULT. | a. FAILS DEACTIVATED | HSR RELAY WILL NOT BE ENERGIZED. HOIST SOUTH DRIVE WILL NOT BE ENABLED. HOIST WILL NOT RUN. | NO EFFECT. | 3 |
| | CONTACT (9H9) | CLOSES TO ENERGIZE HSR RELAY. | a. FAILS OPEN | HSR RELAY WILL NOT BE ENERGIZED. HOIST SOUTH DRIVE WILL NOT BE ENABLED. HOIST WILL NOT RUN. | NO EFFECT. | 3 |
| | | | a. FAILS CLOSED | HSR RELAY WILL NOT DISABLE HOIST SOUTH CONTROL CIRCUIT WHEN LINE FAULT OCCURS. REQUIRES DOUBLE FAILURE. | NO EFFECT. | 3 |
| HSFSA 0001802 | HOIST SOUTH FAULT SENSE ASSEMBLY (5G25) | MONITOR HOIST SOUTH MOTOR CURRENT FOR ABNORMAL CONDITIONS. | | | | |
| | J1-6 | PROVIDE GROUND FOR HSRDY RELAY. | a. FAILS HIGH | HSRDY RELAY WILL NOT ENERGIZE. HOIST SOUTH DRIVE WILL NOT RUN. | NO EFFECT. | 3 |

Table 16 (Page 44 of 50). **ELECTRICAL FMEA - HOIST**

**System** 30-TON BRIDGE CRANE
**Subsystem** HOIST
**Drawing No.** EDERER EB-2286 **Sheet No.**
**PMN** H70-1379-01

**Program** SPACE SHUTTLE

**Station Set/Facility Code** GD
**Date** MARCH 1991
**Reference Figure Used**
**Prepared By** P. CLUKEY, LSOC 51-22

| FIND NO. PART NO. | PART NAME | PART FUNCTION | a. FAILURE MODE b. CAUSE c. FMN d. DETECTION METHOD e. CORRECTING ACTION f. TIME TO EFFECT g. TIMEFRAME | FAILURE EFFECT ON SYSTEM PERFORMANCE | FAILURE EFFECT ON VEHICLE SYSTEMS AND/OR PERSONNEL SAFETY | CRIT CAT |
|---|---|---|---|---|---|---|
| | | | a. FAILS LOW | HSRDY WILL REMAIN ENERGIZED IF LINE FAULT OCCURS. HSFSA WILL DISABLE HSMCM. DOUBLE FAILURE REQUIRED. | NO EFFECT. | 3 |
| | J2-11 | PROVIDE RESET SIGNAL TO HSMCM. | a. FAILS HIGH | RESET SIGNAL WILL NOT REACH HSMCM. HOSR CONTACT WILL TRIP MCB, SHUTTING DOWN CRANE. | NO EFFECT. | 3 |
| | | | a. FAILS LOW | LOW RESET SIGNAL WILL DISABLE HSMCM. HOIST SOUTH DRIVE WILL NOT RUN. | NO EFFECT | 3 |
| | J2-12 | PROVIDE ENABLE SIGNAL TO HSMCM. | a. FAILS HIGH | HSFSA WILL NOT ENABLE HSMCM. HOIST SOUTH DRIVE WILL NOT RUN. | NO EFFECT. | 3 |
| | | | a. FAILS LOW | LINE FAULT WILL DE-ENERGIZE HSRDY RELAY. HOIST SOUTH DRIVE WILL NOT RUN. | NO EFFECT. | 3 |
| HSMCM MODEL 842 | HOIST SOUTH MOTOR CONTROL MODULE (5Q20) | PROVIDE AND CONTROL ARMATURE AND FIELD CURRENTS TO HOIST SOUTH MOTOR. | | | | |
| | J2-3 | SENDS HSMCM READY SIGNAL TO HSFSA. | a. FAILS HIGH | HSFSA WILL NOT ENABLE HSMCM. HOIST SOUTH DRIVE WILL NOT RUN. | NO EFFECT. | 3 |
| | | | a. FAILS LOW | HSMCM WILL CONTINUOUSLY SEND READY SIGNAL WHEN A FAULT EXISTS. REQUIRES PREVIOUS FAILURE. | NO EFFECT. | 3 |
| | J2-4 | SUPPLY +25 VOLTS TO HSFSA. | a. LOW OR NO OUTPUT | HSRDY RELAY MAY NOT ENERGIZE HOIST SOUTH DRIVE CIRCUIT. HOIST SOUTH DRIVE MAY NOT RUN. | NO EFFECT. | 3 |

Table 16 (Page 45 of 50). **ELECTRICAL FMEA - HOIST**

**System** 30-TON BRIDGE CRANE
**Subsystem** HOIST
**Drawing No.** EDERER EB-2286 **Sheet No.**
**PMN** H70-1379-01

**Program** SPACE SHUTTLE

**Station Set/Facility Code** GD
**Date** MARCH 1991
**Reference Figure Used**
**Prepared By** P. CLUKEY, LSOC 51-22

| FIND NO. PART NO. | PART NAME | PART FUNCTION | a. FAILURE MODE b. CAUSE c. FMN d. DETECTION METHOD e. CORRECTING ACTION f. TIME TO EFFECT g. TIMEFRAME | FAILURE EFFECT ON SYSTEM PERFORMANCE | FAILURE EFFECT ON VEHICLE SYSTEMS AND/OR PERSONNEL SAFETY | CRIT CAT |
|---|---|---|---|---|---|---|
| | | | a. FAILS HIGH | EXCESSIVE VOLTAGE MAY DAMAGE COMPONENTS CAUSING HOIST SOUTH DRIVE TO NOT RUN. | NO EFFECT. | 3 |
| | J1-3 | SUPPLY -15 VOLTS TO HSFSA CIRCUITRY. | a. FAILS HIGH OR NO OUTPUT | HSFSA MAY NOT DETECT LINE FAULT AND DISABLE HSMCM. REQUIRES DOUBLE FAILURE. | NO EFFECT. | 3 |
| | | | a. LOW OUTPUT | HSFSA MAY NOT DETECT LINE FAULT AND DISABLE HSMCM. REQUIRES DOUBLE FAILURE. | NO EFFECT. | 3 |
| | J1-4 | SUPPLY +15 VOLTS TO HSFSA CIRCUITRY. | a. LOW OR NO OUTPUT | LOSS OF POWER TO HSFSA CIRCUITRY. HSFSA WILL NOT ENABLE HSMCM. | NO EFFECT. | 3 |
| | | | a. HIGH OUTPUT | HSFSA MAY NOT DETECT LINE FAULT AND DISABLE HSMCM. REQUIRES DOUBLE FAILURE. | NO EFFECT. | 3 |
| | J1-12 | SUPPLIES HOIST SOUTH MOTOR ARMATURE FEED-BACK TO PIC. | a. FAILS LOW OR NO OUTPUT | TORQUE MAY NOT BE PROVED OR PIC WILL DETECT LOAD IMBALANCE AND SHUT DOWN HOIST. | NO EFFECT. | 3 |
| | | | a. HIGH OUTPUT | PIC WILL DETECT LOAD IMBALANCE AND SHUT DOWN HOIST. | NO EFFECT. | 3 |
| | F1, F2 | PROVIDES CURRENT FOR HOIST SOUTH MOTOR FIELDS. | a. FAILS LOW OR NO OUTPUT | HSMCM FIELD LOSS CIRCUIT WILL DETECT ABNORMAL OUTPUT AND REMOVE READY INDICATION TO HSFSA. | NO EFFECT. | 3 |
| | | | a. HIGH OUTPUT | OUTPUT IS LIMITED BY FIELD OUTPUT CIRCUIT AND HIM CONTROL CIRCUIT. DOUBLE FAILURE REQUIRED. | NO EFFECT. | 3 |
| | A1, A2 | PROVIDES ARMATURE CURRENT FOR HOIST SOUTH MOTOR. | a. FAILS LOW OR NO OUTPUT | PIC WILL DETECT LOAD IMBALANCE AND SHUT DOWN HOIST. | NO EFFECT. | 3 |

Table 16 (Page 46 of 50). **ELECTRICAL FMEA - HOIST**

**System** 30-TON BRIDGE CRANE
**Subsystem** HOIST
**Drawing No.** EDERER EB-2286 **Sheet No.**
**PMN** H70-1379-01

**Program** SPACE SHUTTLE

**Station Set/Facility Code** GD
**Date** MARCH 1991
**Reference Figure Used**
**Prepared By** P. CLUKEY, LSOC 51-22

| FIND NO. PART NO. | PART NAME | PART FUNCTION | a. FAILURE MODE b. CAUSE c. FMN d. DETECTION METHOD e. CORRECTING ACTION f. TIME TO EFFECT g. TIMEFRAME | FAILURE EFFECT ON SYSTEM PERFORMANCE | FAILURE EFFECT ON VEHICLE SYSTEMS AND/OR PERSONNEL SAFETY | CRIT CAT |
|---|---|---|---|---|---|---|
| | | | a. HIGH OUTPUT | PIC WILL DETECT LOAD IMBALANCE AND SHUT DOWN HOIST. | NO EFFECT. | 3 |
| HPS DB15-20 | HOIST POWER SUPPLY (6B10) | SUPPLY +/-15 VOLTS DC TO HIM, HOM, MASTER SWITCH, AND FLOAT POT. | a. LOW OR NO OUTPUT | HEOS RELAY WILL DE-ENERGIZE CAUSING MCB TO TRIP. CRANE WILL SHUT DOWN. | NO EFFECT. | 3 |
| | | | a. HIGH OUTPUT | SPEED IN RANGE SELECTED MAY BE UP TO 20% FASTER THAN NORMAL OR FAILURE OF COMPONENTS IN HIM FROM EXCESSIVE VOLTAGE WILL SHUT DOWN HOIST DRIVE. HOIST WILL STOP BY CENTERING MASTER SWITCH, PRESSING STOP OR E-STOP. | NO EFFECT. | 3 |
| NONE NONE | CAPACITOR (6010, 6022) | ATTENUATE AC RIPPLE ON +15V POWER SUPPLY. | a. FAILS OPEN | HIM AND HOM CIRCUITRY WILL ATTENUATE AC RIPPLE. | NO EFFECT. | 3 |
| | | | a. FAILS SHORT | OVERLOAD MAY DAMAGE HPS OR FU20 WILL BLOW TO PROTECT HCT. HEOS RELAY WILL DE-ENERGIZE CAUSING MCB TO TRIP. CRANE WILL SHUT DOWN. | NO EFFECT. | 3 |
| NONE NONE | CAPACITOR (6013, 6023) | ATTENUATE AC RIPPLE ON -15V POWER SUPPLY. | a. FAILS OPEN | HIM AND HOM CIRCUITRY WILL ATTENUATE AC RIPPLE. | NO EFFECT. | 3 |
| | | | a. FAILS SHORT | OVERLOAD MAY DAMAGE HPS OR FU20 WILL BLOW TO PROTECT HCT. HEOS RELAY WILL DE-ENERGIZE CAUSING MCB TO TRIP. CRANE WILL SHUT DOWN. | NO EFFECT. | 3 |
| HEOS KRPA11-DG24 | HOIST ELEC-TRONIC OVERSPEED RELAY (6P30) | DE-ENERGIZES WHEN HOM DETECTS HOIST OVERSPEED. | a. FAILS DEACTIVATED | HOSR CONTACT WILL CAUSE MCB TO TRIP. CRANE WILL SHUT DOWN AND BRAKES WILL SET. | NO EFFECT. | 3 |

Table 16 (Page 47 of 50). **ELECTRICAL FMEA - HOIST**

**System** 30-TON BRIDGE CRANE
**Subsystem** HOIST
**Drawing No.** EDERER EB-2286 **Sheet No.**
**PMN** H70-1379-01

**Program** SPACE SHUTTLE

**Station Set/Facility Code** GD
**Date** MARCH 1991
**Reference Figure Used**
**Prepared By** P. CLUKEY, LSOC 51-22

| FIND NO. PART NO. | PART NAME | PART FUNCTION | a. FAILURE MODE b. CAUSE c. FMN d. DETECTION METHOD e. CORRECTING ACTION f. TIME TO EFFECT g. TIMEFRAME | FAILURE EFFECT ON SYSTEM PERFORMANCE | FAILURE EFFECT ON VEHICLE SYSTEMS AND/OR PERSONNEL SAFETY | CRIT CAT |
|---|---|---|---|---|---|---|
| | CONTACT (9K3) | CLOSES TO ENERGIZE HEOS RELAY. | a. FAILS OPEN | HOSR CONTACT WILL CAUSE MCB TO TRIP. CRANE WILL SHUT DOWN AND BRAKES WILL SET. | NO EFFECT. | 3 |
| | | | a. FAILS CLOSED | HOM WILL NOT SHUT DOWN CRANE WHEN AN OVERSPEED IS DETECTED. CENTRIFUGAL OVERSPEED WILL PROTECT AGAINST HIGH SPEED RANGE OVERSPEED. DOUBLE FAILURE REQUIRED. | NO EFFECT. | 3 |
| NONE 5BC46-AB1581 | NORTH HOIST TACHOMETER (6B30) | GENERATES VOLTAGE PROPORTIONAL TO SPEED OF HOIST NORTH MOTOR. | a. LOW OR NO OUTPUT | PIC WILL DETECT TACHOMETER IMBALANCE AND SHUT DOWN HOIST. | NO EFFECT. | 3 |
| | | | a. HIGH OUTPUT | PIC WILL DETECT TACHOMETER IMBALANCE AND SHUT DOWN HOIST. | NO EFFECT. | 3 |
| NONE 5BC46-AB1581 | SOUTH HOIST TACHOMETER (6F31) | GENERATES VOLTAGE PROPORTIONAL TO SPEED OF HOIST SOUTH MOTOR. | a. LOW OR NO OUTPUT | PIC WILL DETECT TACHOMETER IMBALANCE AND SHUT DOWN HOIST. | NO EFFECT. | 3 |
| | | | a. HIGH OUTPUT | PIC WILL DETECT TACHOMETER IMBALANCE AND SHUT DOWN HOIST. | NO EFFECT. | 3 |
| NONE RN60C | RESISTOR 90.0KΩ (6B26) | SCALE DOWN HOIST NORTH MOTOR TACHOMETER VOLTAGE FOR HOM. | a. FAILS OPEN | PIC WILL DETECT TACHOMETER IMBALANCE AND SHUT DOWN HOIST. | NO EFFECT. | 3 |
| | | | a. FAILS SHORT | PIC WILL DETECT TACHOMETER IMBALANCE AND SHUT DOWN HOIST. | NO EFFECT. | 3 |
| NONE RN60C | RESISTOR 90.0KΩ (6F27) | SCALE DOWN HOIST SOUTH MOTOR TACHOMETER VOLTAGE FOR HOM. | a. FAILS OPEN | PIC WILL DETECT TACHOMETER IMBALANCE AND SHUT DOWN HOIST. | NO EFFECT. | 3 |
| | | | a. FAILS SHORT | PIC WILL DETECT TACHOMETER IMBALANCE AND SHUT DOWN HOIST. | NO EFFECT. | 3 |

Table 16 (Page 48 of 50). **ELECTRICAL FMEA - HOIST**

**System** 30-TON BRIDGE CRANE
**Subsystem** HOIST
**Drawing No.** EDERER EB-2286 **Sheet No.**
**PMN** H70-1379-01

**Program** SPACE SHUTTLE

**Station Set/Facility Code** GD
**Date** MARCH 1991
**Reference Figure Used**
**Prepared By** P. CLUKEY, LSOC 51-22

| FIND NO. PART NO. | PART NAME | PART FUNCTION | a. FAILURE MODE<br>b. CAUSE<br>c. FMN<br>d. DETECTION METHOD<br>e. CORRECTING ACTION<br>f. TIME TO EFFECT<br>g. TIMEFRAME | FAILURE EFFECT ON SYSTEM PERFORMANCE | FAILURE EFFECT ON VEHICLE SYSTEMS AND/OR PERSONNEL SAFETY | CRIT CAT |
|---|---|---|---|---|---|---|
| NONE<br>RN55C | RESISTOR<br>6.81KΩ<br>(6B24) | SCALE DOWN HOIST NORTH MOTOR TACHOMETER VOLTAGE FOR HOM. | a. FAILS OPEN | PIC WILL DETECT TACHOMETER IMBALANCE AND SHUT DOWN HOIST. | NO EFFECT. | 3 |
| | | | a. FAILS SHORT | PIC WILL DETECT TACHOMETER IMBALANCE AND SHUT DOWN HOIST. | NO EFFECT. | 3 |
| NONE<br>6.81KΩ<br>RN55C | RESISTOR<br>(6F25) | SCALE DOWN HOIST SOUTH MOTOR TACHOMETER VOLTAGE FOR HOM. | a. FAILS OPEN | PIC WILL DETECT TACHOMETER IMBALANCE AND SHUT DOWN HOIST. | NO EFFECT. | 3 |
| | | | a. FAILS SHORT | PIC WILL DETECT TACHOMETER IMBALANCE AND SHUT DOWN HOIST. | NO EFFECT. | 3 |
| HIM<br>EC-1909 | HOIST INTERFACE MODULE<br>(6Y10) | PROVIDE INTERFACE BETWEEN PIC, HNMCM, HSMCM, MASTER SWITCH AND FLOAT POT. | | | | |
| | J1-4 | PROVIDE TORQUE REFERENCE SIGNAL TO HNMCM AND HSMCM. | a. FAILS LOW OR NO OUTPUT | HOIST WILL SLOW OR STOP. PIC WILL DETECT ERROR BETWEEN RATE COMMANDED AND COMPOSITE TACH SIGNAL AND SHUT DOWN HOIST. | NO EFFECT. | 3 |
| | | | a. FAILS HIGH | HOIST DRIVE WILL NOT DECELERATE UNTIL MASTER SWITCH/FLOAT POT REACHES NEUTRAL (OFF) POSITION. BRAKES WILL SET AFTER 2.5 SECONDS OR WHEN NEAR ZERO SPEED IS DETECTED, WHICHEVER OCCURS FIRST. SLOW SPEED IN CLOSE PROXIMITY TO AN OBSTRUCTION WILL ALLOW TIME FOR THE HOIST MOTION TO STOP. | NO EFFECT. | 3 |
| | J1-1,<br>J1-2 | PROVIDE CURRENT REFERENCE FOR HOIST NORTH AND SOUTH FIELD COILS. | a. FAILS LOW OR NO OUTPUT | HNMCM AND HSMCM WILL DETECT FIELD LOSS AND REMOVE READY SIGNAL, PREVENTING HOIST OPERATION. | NO EFFECT. | 3 |

Table 16 (Page 49 of 50). **ELECTRICAL FMEA - HOIST**

**System** 30-TON BRIDGE CRANE
**Subsystem** HOIST
**Drawing No.** EDERER EB-2286 **Sheet No.**
**PMN** H70-1379-01

**Program** SPACE SHUTTLE

**Station Set/Facility Code** GD
**Date** MARCH 1991
**Reference Figure Used**
**Prepared By** P. CLUKEY, LSOC 51-22

| FIND NO. PART NO. | PART NAME | PART FUNCTION | a. FAILURE MODE<br>b. CAUSE<br>c. FMN<br>d. DETECTION METHOD<br>e. CORRECTING ACTION<br>f. TIME TO EFFECT<br>g. TIMEFRAME | FAILURE EFFECT ON SYSTEM PERFORMANCE | FAILURE EFFECT ON VEHICLE SYSTEMS AND/OR PERSONNEL SAFETY | CRIT CAT |
|---|---|---|---|---|---|---|
| | | | a. FAILS HIGH | EXCESSIVE FIELD CURRENT WILL BE DETECTED BY HNMCM AND HSMCM. READY SIGNAL WILL BE REMOVED, PREVENTING HOIST OPERATION. | NO EFFECT. | 3 |
| | J1-27 | PROVIDE RATE REFERENCE INPUT TO PIC FROM HIM. | a. FAILS LOW OR NO OUTPUT | PIC WILL DETECT ERROR BETWEEN RATE REFERENCE AND COMPOSITE TACH SIGNAL AND SHUT DOWN HOIST. | NO EFFECT. | 3 |
| | | | a. FAILS HIGH | PIC WILL DETECT ERROR BETWEEN RATE REFERENCE AND COMPOSITE TACH SIGNAL AND SHUT DOWN HOIST. | NO EFFECT. | 3 |
| HOM EC-1889 | HOIST OVERSPEED MODULE (6Y26) | MONITORS HOIST NORTH AND SOUTH MOTORS FOR OVERSPEED CONDITION. | | | | |
| | J1-70 | PROVIDE COMPOSITE TACH SIGNAL TO HIM AND PIC. | a. FAILS LOW OR NO OUTPUT | PIC WILL DETECT ERROR BETWEEN COMPOSITE TACH SIGNAL AND RATE REFERENCE SIGNAL AND SHUT DOWN HOIST. | NO EFFECT. | 3 |
| | | | a. FAILS HIGH | PIC WILL DETECT ERROR BETWEEN COMPOSITE TACH SIGNAL AND RATE REFERENCE SIGNAL AND SHUT DOWN HOIST. | NO EFFECT. | 3 |
| | J1-30 | PROVIDES 15V INTERLOCK BETWEEN HOM AND HIM. | a. FAILS OPEN | HEOS RELAY WILL NOT ENERGIZE CAUSING MCB TO TRIP. CRANE WILL SHUT DOWN AND ALL BRAKES WILL SET. | NO EFFECT. | 3 |
| | | | a. FAILS SHORT | EXCESSIVE CURRENT MAY DAMAGE HPS AND BLOW FU20. HEOS RELAY WILL DE-ENERGIZE CAUSING MCB TO TRIP. CRANE WILL SHUT DOWN AND ALL BRAKES WILL SET. | NO EFFECT. | 3 |

Table 16 (Page 50 of 50). **ELECTRICAL FMEA - HOIST**

**System** 30-TON BRIDGE CRANE
**Subsystem** HOIST
**Drawing No.** EDERER EB-2286 **Sheet No.**
**PMN** H70-1379-01

**Program** SPACE SHUTTLE

**Station Set/Facility Code** GD
**Date** MARCH 1991
**Reference Figure Used**
**Prepared By** P. CLUKEY, LSOC 51-22

| FIND NO. PART NO. | PART NAME | PART FUNCTION | a. FAILURE MODE b. CAUSE c. FMN d. DETECTION METHOD e. CORRECTING ACTION f. TIME TO EFFECT g. TIMEFRAME | FAILURE EFFECT ON SYSTEM PERFORMANCE | FAILURE EFFECT ON VEHICLE SYSTEMS AND/OR PERSONNEL SAFETY | CRIT CAT |
|---|---|---|---|---|---|---|
| | J1-47 | PROVIDE HOIST NORTH MOTOR TACH SIGNAL TO HNMCM AND PIC. | a. FAILS LOW OR NO OUTPUT | PIC WILL DETECT ERROR BETWEEN NORTH AND SOUTH TACH SIGNALS AND SHUT DOWN HOIST. | NO EFFECT. | 3 |
| | | | a. FAILS HIGH | PIC WILL DETECT ERROR BETWEEN NORTH AND SOUTH TACH SIGNALS AND SHUT DOWN HOIST. | NO EFFECT. | 3 |
| | J1-48 | PROVIDE HOIST SOUTH MOTOR TACH SIGNAL TO HSMCM AND PIC. | a. FAILS LOW OR NO OUTPUT | PIC WILL DETECT ERROR BETWEEN NORTH AND SOUTH TACH SIGNALS AND SHUT DOWN HOIST. | NO EFFECT. | 3 |
| | | | a. FAILS HIGH | PIC WILL DETECT ERROR BETWEEN NORTH AND SOUTH TACH SIGNALS AND SHUT DOWN HOIST. | NO EFFECT. | 3 |
| | J1-75 | SUPPLY POSITIVE VOLTAGE TO ENERGIZE HEOS RELAY. | a. FAILS LOW OR NO OUTPUT | HEOS RELAY WILL NOT ENERGIZE. HEOS CONTACT WILL NOT ENERGIZE HOSR RELAY CAUSING MCB TO TRIP. CRANE WILL SHUT DOWN. | NO EFFECT. | 3 |
| | | | a. CONTINUOUS OUTPUT | HEOS RELAY MAY NOT DE-ENERGIZE WHEN AN OVERSPEED OCCURS. REQUIRES PREVIOUS FAILURE IN HOIST CONTROL CIRCUIT. | NO EFFECT. | 3 |
| | J1-29 | SUPPLY NEGATIVE VOLTAGE TO ENERGIZE HEOS RELAY. | a. FAILS HIGH OR NO OUTPUT | HEOS RELAY WILL NOT ENERGIZE. HEOS CONTACT WILL NOT ENERGIZE HOSR RELAY CAUSING MCB TO TRIP. CRANE WILL SHUT DOWN. | NO EFFECT. | 3 |
| | | | a. CONTINUOUS OUTPUT | HEOS RELAY MAY NOT DE-ENERGIZE WHEN AN OVERSPEED OCCURS. REQUIRES PREVIOUS FAILURE IN HOIST CONTROL CIRCUIT. | NO EFFECT. | 3 |

Table 17 (Page 1 of 14). **ELECTRICAL FMEA - PIC**

**System** 30-TON BRIDGE CRANE
**Subsystem** PIC
**Drawing No.** EDERER EB-2286 **Sheet No.**
**PMN** H70-1379-01

**Program** SPACE SHUTTLE

**Station Set/Facility Code** GD
**Date** MARCH 1991
**Reference Figure Used**
**Prepared By** P. CLUKEY, LSOC 51-22

| FIND NO. PART NO. | PART NAME | PART FUNCTION | a. FAILURE MODE b. CAUSE c. FMN d. DETECTION METHOD e. CORRECTING ACTION f. TIME TO EFFECT g. TIMEFRAME | FAILURE EFFECT ON SYSTEM PERFORMANCE | FAILURE EFFECT ON VEHICLE SYSTEMS AND/OR PERSONNEL SAFETY | CRIT CAT |
|---|---|---|---|---|---|---|
| CB1 THOC111-5WL | CIRCUIT BREAKER (11B3) | PROTECT MAIN POWER FROM OVERLOAD IN PIC CIRCUIT. | a. PREMATURE OPERATION | LOSS OF POWER TO PIC. HOIST WILL SHUT DOWN AND BRAKES WILL (REMAIN) SET. | NO EFFECT. | 3 |
| | | | a. FAILS TO OPERATE | ITFU WILL PROTECT AGAINST OVER-LOADS IN PIC CIRCUIT. REQUIRES DOUBLE FAILURE. | NO EFFECT. | 3 |
| ITFU FRNR-6.2 | ISOLATION TRANS-FORMER FUSE (11B5) | PROTECT MAIN POWER FROM OVERLOAD IN PIC CIRCUIT. | a. PREMATURE OPERATION | LOSS OF POWER TO PIC. HOIST WILL SHUT DOWN AND BRAKES WILL (REMAIN) SET. | NO EFFECT. | 3 |
| | | | a. FAILS TO OPERATE | CB1 WILL PROTECT AGAINST OVER-LOADS IN PIC CIRCUIT. REQUIRES DOUBLE FAILURE. | NO EFFECT. | 3 |
| IT 9T91L-1153 | ISOLATION TRANS-FORMER (11D7) | ISOLATES PIC FROM MAIN POWER SUPPLY. | a. FAILS OPEN | LOSS OF POWER TO PIC. HOIST WILL SHUT DOWN AND BRAKES WILL (REMAIN) SET. | NO EFFECT. | 3 |
| | | | a. FAILS SHORT | ITFU WILL PROTECT MAIN POWER SUPPLY AGAINST OVERLOAD. | NO EFFECT. | 3 |
| UPPER SLOT 19 502-02907-20 | ANALOG INPUT MODULE (7C7) | CONVERTS ANALOG INPUT SIGNAL TO DIGITAL FORMAT. | | | | |
| | CH7 | COMPOSITE TACH SIGNAL INPUT FROM HOM. | a. FAILS LOW | PIC WILL DETECT ERROR BETWEEN COMPOSITE TACH AND ACC/DEC INPUT SIGNALS AND SHUT DOWN HOIST. | NO EFFECT. | 3 |
| | | | a. FAILS HIGH | PIC WILL DETECT ERROR BETWEEN COMPOSITE TACH AND ACC/DEC INPUT SIGNALS AND SHUT DOWN HOIST. | NO EFFECT. | 3 |

Table 17 (Page 2 of 14). **ELECTRICAL FMEA - PIC**

**System** 30-TON BRIDGE CRANE
**Subsystem** PIC
**Drawing No.** EDERER EB-2286 **Sheet No.**
**PMN** H70-1379-01

**Program** SPACE SHUTTLE

**Station Set/Facility Code** GD
**Date** MARCH 1991
**Reference Figure Used**
**Prepared By** P. CLUKEY, LSOC 51-22

| FIND NO. PART NO. | PART NAME | PART FUNCTION | a. FAILURE MODE<br>b. CAUSE<br>c. FMN<br>d. DETECTION METHOD<br>e. CORRECTING ACTION<br>f. TIME TO EFFECT<br>g. TIMEFRAME | FAILURE EFFECT ON SYSTEM PERFORMANCE | FAILURE EFFECT ON VEHICLE SYSTEMS AND/OR PERSONNEL SAFETY | CRIT CAT |
|---|---|---|---|---|---|---|
| | CH6 | ACC/DEC SIGNAL INPUT FROM HIM. | a. FAILS LOW | HOIST WILL SLOW OR STOP. BRAKES WILL SET WHEN ZERO SPEED IS DETECTED. | NO EFFECT. | 3 |
| | | | a. FAILS HIGH | PIC WILL DETECT ERROR BETWEEN RATE REFERENCE AND COMPOSITE TACH SIGNAL AND SHUT DOWN HOIST. | NO EFFECT. | 3 |
| | CH5 | NORTH HOIST MOTOR ARMATURE CURRENT FEEDBACK FROM HNMCM. | a. FAILS LOW | PIC WILL DETECT CURRENT IMBALANCE BETWEEN NORTH AND SOUTH HOIST MOTORS AND SHUT DOWN HOIST. | NO EFFECT. | 3 |
| | | | a. FAILS HIGH | PIC WILL DETECT CURRENT IMBALANCE BETWEEN NORTH AND SOUTH HOIST MOTORS AND SHUT DOWN HOIST. | NO EFFECT. | 3 |
| | CH4 | SOUTH HOIST MOTOR ARMATURE CURRENT FEEDBACK FROM HSMCM. | a. FAILS LOW | PIC WILL DETECT CURRENT IMBALANCE BETWEEN NORTH AND SOUTH HOIST MOTORS AND SHUT DOWN HOIST. | NO EFFECT. | 3 |
| | | | a. FAILS HIGH | PIC WILL DETECT CURRENT IMBALANCE BETWEEN NORTH AND SOUTH HOIST MOTORS AND SHUT DOWN HOIST. | NO EFFECT. | 3 |
| | CH3 | LOW SPEED SELF CHECK INPUT FROM SLOT 24, OUT 2. | a. FAILS LOW | PIC WILL DETECT INPUT/OUTPUT (I/O) ERROR, SHUT DOWN HOIST AND LIGHT COMPUTER FAULT INDICATOR. | NO EFFECT. | 3 |
| | | | a. FAILS HIGH | PIC WILL DETECT INPUT/OUTPUT (I/O) ERROR, SHUT DOWN HOIST AND LIGHT COMPUTER FAULT INDICATOR. | NO EFFECT. | 3 |
| | CH2 | HIGH SPEED SELF CHECK INPUT FROM SLOT 24, OUT 3. | a. FAILS LOW | PIC WILL DETECT INPUT/OUTPUT (I/O) ERROR, SHUT DOWN HOIST AND LIGHT COMPUTER FAULT INDICATOR. | NO EFFECT. | 3 |

Table 17 (Page 3 of 14). **ELECTRICAL FMEA - PIC**

**System** 30-TON BRIDGE CRANE
**Subsystem** PIC
**Drawing No.** EDERER EB-2286 **Sheet No.**
**PMN** H70-1379-01

**Program** SPACE SHUTTLE

**Station Set/Facility Code** GD
**Date** MARCH 1991
**Reference Figure Used**
**Prepared By** P. CLUKEY, LSOC 51-22

| FIND NO. PART NO. | PART NAME | PART FUNCTION | a. FAILURE MODE b. CAUSE c. FMN d. DETECTION METHOD e. CORRECTING ACTION f. TIME TO EFFECT g. TIMEFRAME | FAILURE EFFECT ON SYSTEM PERFORMANCE | FAILURE EFFECT ON VEHICLE SYSTEMS AND/OR PERSONNEL SAFETY | CRIT CAT |
|---|---|---|---|---|---|---|
| | | | a. FAILS HIGH | PIC WILL DETECT INPUT/OUTPUT (I/O) ERROR, SHUT DOWN HOIST AND LIGHT COMPUTER FAULT INDICATOR. | NO EFFECT. | 3 |
| | CH1 | HOIST SELF CHECK INPUT FROM SLOT 24, OUT 4. | a. FAILS LOW | PIC WILL DETECT INPUT/OUTPUT (I/O) ERROR, SHUT DOWN HOIST AND LIGHT COMPUTER FAULT INDICATOR. | NO EFFECT. | 3 |
| | | | a. FAILS HIGH | PIC WILL DETECT INPUT/OUTPUT (I/O) ERROR, SHUT DOWN HOIST AND LIGHT COMPUTER FAULT INDICATOR. | NO EFFECT. | 3 |
| | CH0 | LOWER SELF CHECK INPUT FROM SLOT 24, OUT 5. | a. FAILS LOW | PIC WILL DETECT INPUT/OUTPUT (I/O) ERROR, SHUT DOWN HOIST AND LIGHT COMPUTER FAULT INDICATOR. | NO EFFECT. | 3 |
| | | | a. FAILS HIGH | PIC WILL DETECT INPUT/OUTPUT (I/O) ERROR, SHUT DOWN HOIST AND LIGHT COMPUTER FAULT INDICATOR. | NO EFFECT. | 3 |
| UPPER SLOT 22 502-02822-00 | ANALOG OUTPUT MODULE (7M7) | CONVERTS DIGITAL OUTPUT SIGNAL TO ANALOG FORMAT. | | | | |
| | CH0 | RATE REF #1 OUTPUT TO HIM AND SELF CHECK INPUT. | a. FAILS LOW | HOIST WILL RUN SLOWER THAN COMMANDED OR NOT AT ALL. PIC WILL DETECT EXCESSIVE ERROR BETWEEN COMPOSITE TACH SIGNAL AND ACC/DEC INPUT SIGNAL AND SHUT DOWN HOIST. | NO EFFECT. | 3 |

Table 17 (Page 4 of 14). **ELECTRICAL FMEA - PIC**

System 30-TON BRIDGE CRANE
Subsystem PIC
Drawing No. EDERER EB-2286 Sheet No.
PMN H70-1379-01

Program SPACE SHUTTLE

Station Set/Facility Code GD
Date MARCH 1991
Reference Figure Used
Prepared By P. CLUKEY, LSOC 51-22

| FIND NO. PART NO. | PART NAME | PART FUNCTION | a. FAILURE MODE b. CAUSE c. FMN d. DETECTION METHOD e. CORRECTING ACTION f. TIME TO EFFECT g. TIMEFRAME | FAILURE EFFECT ON SYSTEM PERFORMANCE | FAILURE EFFECT ON VEHICLE SYSTEMS AND/OR PERSONNEL SAFETY | CRIT CAT |
|---|---|---|---|---|---|---|
| | | | a. FAILS HIGH | HOIST DRIVE WILL NOT DECELERATE UNTIL HOIST MASTER SWITCH OR FLOAT MODE POT REACHES NEUTRAL (OFF) POSITION. SLOW SPEED IN CLOSE PROXIMITY TO AN OBSTRUCTION WILL ALLOW TIME FOR HOIST TO STOP. PIC WILL THEN DETECT I/O ERROR AND SHUT DOWN HOIST. | NO EFFECT. | 3 |
| | CH1 | RATE REF #2 OUTPUT TO SELF CHECK INPUT AND HIM. | a. FAILS LOW | NO EFFECT. HOIST USES CH0 SIGNAL DURING DUAL DRIVE HOISTING OPERATIONS. DURING SOUTH DRIVE ONLY OPERATIONS, HOIST WILL RUN SLOWER THAN COMMANDED OR NOT AT ALL. PIC WILL DETECT EXCESSIVE ERROR BETWEEN COMPOSITE TACH SIGNAL AND ACC/DEC INPUT SIGNAL AND SHUT DOWN HOIST. | NO EFFECT. | 3 |
| | | | a. FAILS HIGH | NO EFFECT. HOIST USES CH0 SIGNAL DURING DUAL DRIVE HOISTING OPERATIONS. DURING SOUTH DRIVE ONLY OPERATIONS, HOIST DRIVE WILL NOT DECELERATE UNTIL HOIST MASTER SWITCH OR FLOAT MODE POT REACHES NEUTRAL (OFF) POSITION. SLOW SPEED IN CLOSE PROXIMITY TO AN OBSTRUCTION WILL ALLOW TIME FOR HOIST TO STOP. PIC WILL THEN DETECT I/O ERROR AND SHUT DOWN HOIST. | NO EFFECT. | 3 |
| | CH2 | TORQUE PROVING OUTPUT TO HIM AND SELF CHECK INPUT. | a. FAILS LOW | TORQUE MAY NOT BE PROVED AND HOIST WILL NOT BE ALLOWED TO RUN. | NO EFFECT. | 3 |
| | | | a. FAILS HIGH | PIC WILL DETECT I/O ERROR. SHUT DOWN HOIST AND LIGHT COMPUTER FAULT INDICATOR. | NO EFFECT. | 3 |

Table 17 (Page 5 of 14). **ELECTRICAL FMEA - PIC**

System 30-TON BRIDGE CRANE
Subsystem PIC
Drawing No. EDERER EB-2286 Sheet No.
PMN H70-1379-01

Program SPACE SHUTTLE

Station Set/Facility Code GD
Date MARCH 1991
Reference Figure Used
Prepared By P. CLUKEY, LSOC 51-22

| FIND NO. PART NO. | PART NAME | PART FUNCTION | a. FAILURE MODE<br>b. CAUSE<br>c. FMN<br>d. DETECTION METHOD<br>e. CORRECTING ACTION<br>f. TIME TO EFFECT<br>g. TIMEFRAME | FAILURE EFFECT ON SYSTEM PERFORMANCE | FAILURE EFFECT ON VEHICLE SYSTEMS AND/OR PERSONNEL SAFETY | CRIT CAT |
|---|---|---|---|---|---|---|
| | CH3 (CRANE #2 ONLY) | TORQUE BIAS OUTPUT TO HIM AND SELF CHECK INPUT. | a. FAILS LOW | PIC WILL DETECT I/O ERROR. SHUT DOWN HOIST AND LIGHT COMPUTER FAULT INDICATOR. | NO EFFECT. | 3 |
| | | | a. FAILS HIGH | PIC WILL DETECT I/O ERROR. SHUT DOWN HOIST AND LIGHT COMPUTER FAULT INDICATOR. | NO EFFECT. | 3 |
| UPPER SLOT 24 502-02815-00 | DC OUTPUT MODULE (7V7) | CONVERT DIGITAL OUTPUT SIGNAL TO 24 VDC FORMAT. | | | | |
| | OUT 0 | DELAY ENABLE OUTPUT TO HIM. | a. FAILS LOW | HIM WILL NOT RELEASE ACC/DEC OUTPUT TO PIC. HOIST WILL NOT RUN, BRAKE WILL (REMAIN) SET. | NO EFFECT. | 3 |
| | | | a. FAILS HIGH | BRAKES MAY NOT FULLY RELEASE BEFORE LOAD BEGINS MOTION. LOAD MAY JERK SLIGHTLY. | NO EFFECT. | 3 |
| | OUT 1 | FLOAT SPEED RANGE OUTPUT TO HIM AND HOM. | a. FAILS HIGH | HOIST WILL OPERATE IN FLOAT MODE ONLY. | NO EFFECT. | 3 |
| | | | a. FAILS LOW | HOIST WILL NOT OPERATE IN FLOAT MODE. | NO EFFECT. | 3 |
| | OUT 2 | LOW SPEED RANGE OUTPUT TO HIM, HOM, AND SELF CHECK INPUT. | a. FAILS HIGH | HOIST WILL COMPLETE A MOTION IN LOW SPEED RANGE, OTHERWISE, PIC WILL DETECT I/O ERROR AND SHUT DOWN HOIST. | NO EFFECT. | 3 |
| | | | a. FAILS LOW | FLOAT MODE AND HIGH SPEED WILL OPERATE NORMALLY. PIC WILL DETECT I/O ERROR IN LOW SPEED AND SHUT DOWN HOIST. | NO EFFECT. | 3 |
| | OUT 3 | HIGH SPEED RANGE OUTPUT TO HIM, HOM, AND SELF CHECK INPUT. | a. FAILS HIGH | FSR CONTACT WILL BREAK FULL SPEED CIRCUIT. HOIST WILL OPERATE NORMALLY. | NO EFFECT. | 3 |

Table 17 (Page 6 of 14). **ELECTRICAL FMEA - PIC**

**System** 30-TON BRIDGE CRANE
**Subsystem** PIC
**Drawing No.** EDERER EB-2286 **Sheet No.**
**PMN** H70-1379-01

**Program** SPACE SHUTTLE

**Station Set/Facility Code** GD
**Date** MARCH 1991
**Reference Figure Used**
**Prepared By** P. CLUKEY, LSOC 51-22

| FIND NO. PART NO. | PART NAME | PART FUNCTION | a. FAILURE MODE b. CAUSE c. FMN d. DETECTION METHOD e. CORRECTING ACTION f. TIME TO EFFECT g. TIMEFRAME | FAILURE EFFECT ON SYSTEM PERFORMANCE | FAILURE EFFECT ON VEHICLE SYSTEMS AND/OR PERSONNEL SAFETY | CRIT CAT |
|---|---|---|---|---|---|---|
| | | | a. FAILS LOW | FLOAT MODE AND LOW SPEED WILL OPERATE NORMALLY. PIC WILL DETECT I/O ERROR IN HIGH SPEED AND SHUT DOWN HOIST. | NO EFFECT. | 3 |
| | OUT 4 | HOIST OUTPUT TO HIM, HOM, AND SELF CHECK INPUT. | a. FAILS HIGH | PIC WILL DETECT I/O ERROR AND SHUT DOWN HOIST. | NO EFFECT. | 3 |
| | | | a. FAILS LOW | LOWER WILL OPERATE NORMALLY. WHEN A HOIST IS ATTEMPTED, PIC WILL DETECT I/O ERROR AND SHUT DOWN HOIST. | NO EFFECT. | 3 |
| | OUT 5 | LOWER OUTPUT TO HIM, HOM, AND SELF CHECK INPUT. | a. FAILS HIGH | PIC WILL DETECT I/O ERROR AND SHUT DOWN HOIST. | NO EFFECT. | 3 |
| | | | a. FAILS LOW | HOISTING WILL OPERATE NORMALLY. WHEN A LOWER IS ATTEMPTED, PIC WILL DETECT I/O ERROR AND SHUT DOWN HOIST. | NO EFFECT. | 3 |
| UPPER SLOT 10 502-02907-20 | ANALOG INPUT MODULE (7AN7) | CONVERT ANALOG INPUT SIGNALS TO DIGITAL FORMAT. | | | | |
| | CH7 (CRANE #2 ONLY) | TORQUE BIAS SELF CHECK INPUT | a. FAILS HIGH | PIC WILL DETECT INPUT/OUTPUT ERROR AND SHUT DOWN HOIST. | NO EFFECT. | 3 |
| | | | a. FAILS LOW | PIC WILL DETECT INPUT/OUTPUT ERROR AND SHUT DOWN HOIST. | NO EFFECT. | 3 |
| | CH6 | FLOAT POT INPUT FROM FLOAT POTENTIOMETER. | a. FAILS HIGH | PIC WILL DETECT IMPROPER VOLTAGE AND SHUT DOWN HOIST. | NO EFFECT. | 3 |

Table 17 (Page 7 of 14). **ELECTRICAL FMEA - PIC**

**System** 30-TON BRIDGE CRANE
**Subsystem** PIC
**Drawing No.** EDERER EB-2286 **Sheet No.**
**PMN** H70-1379-01

**Program** SPACE SHUTTLE

**Station Set/Facility Code** GD
**Date** MARCH 1991
**Reference Figure Used**
**Prepared By** P. CLUKEY, LSOC 51-22

| FIND NO. PART NO. | PART NAME | PART FUNCTION | a. FAILURE MODE<br>b. CAUSE<br>c. FMN<br>d. DETECTION METHOD<br>e. CORRECTING ACTION<br>f. TIME TO EFFECT<br>g. TIMEFRAME | FAILURE EFFECT ON SYSTEM PERFORMANCE | FAILURE EFFECT ON VEHICLE SYSTEMS AND/OR PERSONNEL SAFETY | CRIT CAT |
|---|---|---|---|---|---|---|
| | | | a. FAILS LOW | PIC WILL NOT DETECT IMPROPER VOLTAGE. PREVIOUS FAILURE IN FLOAT POT REQUIRED. | NO EFFECT. | 3 |
| | CH5 | MASTER SWITCH INPUT FROM MASTER SWITCH POTENTIO-METER. | a. FAILS HIGH | PIC WILL DETECT IMPROPER VOLTAGE AND SHUT DOWN HOIST. | NO EFFECT. | 3 |
| | | | a. FAILS LOW | PIC WILL NOT DETECT IMPROPER VOLTAGE. PREVIOUS FAILURE IN MASTER SWITCH POTENTIOMETER REQUIRED. | NO EFFECT. | 3 |
| | CH4 | TORQUE PROVING INPUT FROM SLOT 22, CH2. | a. FAILS HIGH | PIC WILL DETECT IMPROPER VOLTAGE AND SHUT DOWN HOIST. | NO EFFECT. | 3 |
| | | | a. FAILS LOW | PIC WILL NOT DETECT OUTPUT ERROR FROM SLOT 22, CH2. DOUBLE FAILURE REQUIRED. | NO EFFECT. | 3 |
| | CH3 | #2 RATE REF INPUT FROM SLOT 22, CH1. | a. FAILS HIGH | PIC WILL DETECT IMPROPER VOLTAGE AND SHUT DOWN HOIST. | NO EFFECT. | 3 |
| | | | a. FAILS LOW | PIC WILL NOT DETECT OUTPUT ERROR FROM SLOT 22, CH1. DOUBLE FAILURE REQUIRED. | NO EFFECT. | 3 |
| | CH2 | #1 RATE REF INPUT FROM SLOT 22, CH0. | a. FAILS HIGH | PIC WILL DETECT IMPROPER VOLTAGE AND SHUT DOWN HOIST. | NO EFFECT. | 3 |
| | | | a. FAILS LOW | PIC WILL NOT DETECT OUTPUT ERROR FROM SLOT 22, CH0. DOUBLE FAILURE REQUIRED. | NO EFFECT. | 3 |
| | CH1 | SOUTH BUFFERED TACH INPUT FROM HOM. | a. FAILS HIGH | PIC WILL DETECT DIFFERENCE BETWEEN NORTH AND SOUTH TACH INPUTS AND SHUT DOWN HOIST. | NO EFFECT. | 3 |

Table 17 (Page 8 of 14). **ELECTRICAL FMEA - PIC**

**System** 30-TON BRIDGE CRANE
**Subsystem** PIC
**Drawing No.** EDERER EB-2286 **Sheet No.**
**PMN** H70-1379-01

**Program** SPACE SHUTTLE

**Station Set/Facility Code** GD
**Date** MARCH 1991
**Reference Figure Used**
**Prepared By** P. CLUKEY, LSOC 51-22

| FIND NO. PART NO. | PART NAME | PART FUNCTION | a. FAILURE MODE b. CAUSE c. FMN d. DETECTION METHOD e. CORRECTING ACTION f. TIME TO EFFECT g. TIMEFRAME | FAILURE EFFECT ON SYSTEM PERFORMANCE | FAILURE EFFECT ON VEHICLE SYSTEMS AND/OR PERSONNEL SAFETY | CRIT CAT |
|---|---|---|---|---|---|---|
| | | | a. FAILS LOW | PIC WILL DETECT DIFFERENCE BETWEEN NORTH AND SOUTH TACH INPUTS AND SHUT DOWN HOIST. | NO EFFECT. | 3 |
| | CH0 | NORTH BUFFERED TACH INPUT FROM HOM. | a. FAILS HIGH | PIC WILL DETECT DIFFERENCE BETWEEN NORTH AND SOUTH TACH INPUTS AND SHUT DOWN HOIST. | NO EFFECT. | 3 |
| | | | a. FAILS LOW | PIC WILL DETECT DIFFERENCE BETWEEN NORTH AND SOUTH TACH INPUTS AND SHUT DOWN HOIST. | NO EFFECT. | 3 |
| LOWER SLOT 16 502-02906-00 | SCAN MONITOR | MONITOR PIC FOR EXCESSIVE SCAN TIME THROUGH LADDER DIAGRAM NETWORK. | a. FAILS OPEN | SM RELAY WILL NOT ENERGIZE, PRE-VENTING HOIST CONTROLS FROM POWERING UP. HOIST WILL NOT RUN. | NO EFFECT. | 3 |
| | | | a. FAILS SHORT | SCAN MONITOR WILL NOT DE-ENERGIZE HOIST CONTROLS WHEN AN EXCESSIVE SCAN TIME IS DETECTED. REQUIRES PREVIOUS FAILURE IN PIC. | NO EFFECT. | 3 |
| | | | a. TIMER CIRCUIT FAILS | SCAN MONITOR WILL NOT DE-ENERGIZE HOIST CONTROLS WHEN AN EXCESSIVE SCAN TIME IS DETECTED. REQUIRES PREVIOUS FAILURE IN PIC. | NO EFFECT. | 3 |
| LOWER SLOT 13 502-02959-00 | AC INPUT MODULE. | CONVERT AC INPUT SIGNAL TO DIGITAL FORMAT. | | | | |
| | < 13-0 > (954) | ROTARY (GEARED) LIMIT INPUT. | a. FAILS HIGH | HOIST CAN DRIVE PAST ROTARY LIMIT SWITCHES. WEIGHTED LIMIT SWITCH WILL PREVENT TWO-BLOCKING. DOUBLE FAILURE REQUIRED. | NO EFFECT. | 3 |
| | | | a. FAILS LOW | HOIST WILL NOT RAISE OR LOWER IN NORMAL OR FLOAT MODE. | NO EFFECT. | 3 |

Table 17 (Page 9 of 14). **ELECTRICAL FMEA - PIC**

**System** 30-TON BRIDGE CRANE
**Subsystem** PIC
**Drawing No.** EDERER EB-2286 **Sheet No.**
**PMN** H70-1379-01

**Program** SPACE SHUTTLE

**Station Set/Facility Code** GD
**Date** MARCH 1991
**Reference Figure Used**
**Prepared By** P. CLUKEY, LSOC 51-22

| FIND NO. PART NO. | PART NAME | PART FUNCTION | a. FAILURE MODE b. CAUSE c. FMN d. DETECTION METHOD e. CORRECTING ACTION f. TIME TO EFFECT g. TIMEFRAME | FAILURE EFFECT ON SYSTEM PERFORMANCE | FAILURE EFFECT ON VEHICLE SYSTEMS AND/OR PERSONNEL SAFETY | CRIT CAT |
|---|---|---|---|---|---|---|
| LOWER SLOT 19 502-02959-00 | AC INPUT MODULE. | CONVERT AC INPUT SIGNAL TO DIGITAL FORMAT. | | | | |
| | < 19-0 > (3T19) | START/STOP INPUT | a. FAILS HIGH | M CONTACTS WILL INTERRUPT POWER TO CRANE. CRANE WILL NOT RUN. | NO EFFECT. | 3 |
| | | | a. FAILS LOW | PIC SERVO ROUTINES WILL NOT BE ENABLED. HOIST WILL NOT RUN. | NO EFFECT. | 3 |
| | < 19-1 > (8T16) | HOIST NORTH DRIVE REQUESTED INPUT. | a. FAILS HIGH | TORQUE PROVING WILL BE PRE-VENTED. HOIST WILL NOT RUN. | NO EFFECT. | 3 |
| | | | a. FAILS LOW | HOIST NORTH DRIVE WILL NOT RUN. CAB AMMETERS WILL INDICATE ONLY ONE MOTOR IS DRAWING CURRENT. | NO EFFECT. | 3 |
| | < 19-2 > (8T19) | HOIST SOUTH DRIVE REQUESTED INPUT. | a. FAILS HIGH | TORQUE PROVING WILL BE PRE-VENTED. HOIST WILL NOT RUN. | NO EFFECT. | 3 |
| | | | a. FAILS LOW | HOIST SOUTH DRIVE WILL NOT RUN. CAB AMMETERS WILL INDICATE ONLY ONE MOTOR IS DRAWING CURRENT. | NO EFFECT. | 3 |
| | < 19-3 > (8T22) | HIGH SPEED COMMANDED INPUT. | a. FAILS HIGH | FSR CONTACT WILL BREAK HIGH SPEED OUTPUT CIRCUIT FROM PIC. PIC WILL DETECT I/O ERROR AND SHUT DOWN HOIST. | NO EFFECT. | 3 |
| | | | a. FAILS LOW | HOIST WILL OPERATE IN SLOW SPEED RANGE REGARDLESS OF SPEED RANGE SELECTED. | NO EFFECT. | 3 |
| | < 19-4 > (8AT12) | FLOAT MODE INPUT FROM FOOT SWITCH. | a. FAILS HIGH | HOIST WILL RUN IN-FLOAT MODE ONLY. | NO EFFECT. | 3 |
| | | | a. FAILS LOW | HOIST WILL NOT RUN IN FLOAT MODE. HOIST WILL OPERATE IN LOW AND HIGH SPEEDS. | NO EFFECT. | 3 |

Table 17 (Page 10 of 14). **ELECTRICAL FMEA - PIC**

**System** 30-TON BRIDGE CRANE
**Subsystem** PIC
**Drawing No.** EDERER EB-2286 **Sheet No.**
**PMN** H70-1379-01

**Program** SPACE SHUTTLE

**Station Set/Facility Code** GD
**Date** MARCH 1991
**Reference Figure Used**
**Prepared By** P. CLUKEY, LSOC 51-22

| FIND NO. PART NO. | PART NAME | PART FUNCTION | a. FAILURE MODE b. CAUSE c. FMN d. DETECTION METHOD e. CORRECTING ACTION f. TIME TO EFFECT g. TIMEFRAME | FAILURE EFFECT ON SYSTEM PERFORMANCE | FAILURE EFFECT ON VEHICLE SYSTEMS AND/OR PERSONNEL SAFETY | CRIT CAT |
|---|---|---|---|---|---|---|
| | < 19-5 > (8AT15) | FLOAT MODE BRAKE RELEASE INPUT FROM THUMBSWITCH. | a. FAILS HIGH | PREVENT HOIST POWER UP. | NO EFFECT. | 3 |
| | | | a. FAILS LOW | HOIST WILL NOT RUN IN FLOAT MODE. | NO EFFECT. | 3 |
| | < 19-6 > (8AT16) | HOIST COMMANDED INPUT FROM MASTER SWITCH. | a. FAILS HIGH | HOIST WILL OPERATE AT SOME SLOW SPEED. IF SPEED EXCEEDS 5% OF FULL SPEED, OVERSPEED WILL TRIP ON WRONG DIRECTION LOGIC CHECK. | NO EFFECT. | 3 |
| | | | a. FAILS LOW | HOIST WILL NOT RAISE LOAD IN LOW OR HIGH SPEED. LOAD CAN BE RAISED IN FLOAT MODE. | NO EFFECT. | 3 |
| | < 19-7 > (8AT20) | LOWER COMMANDED INPUT FROM MASTER SWITCH. | a. FAILS HIGH | HOIST WILL OPERATE AT SOME SLOW SPEED. IF SPEED EXCEEDS 5% OF FULL SPEED, OVERSPEED WILL TRIP ON WRONG DIRECTION LOGIC CHECK. | NO EFFECT. | 3 |
| | | | a. FAILS LOW | HOIST WILL NOT LOWER LOAD IN SLOW OR HIGH SPEED. LOAD CAN BE LOWERED IN FLOAT MODE. | NO EFFECT. | 3 |
| LOWER SLOT 22 502-02959-00 | AC INPUT MODULE. | CONVERT AC SIGNAL TO DIGITAL FORMAT. | | | | |
| | < 22-0 > (8AT21) | HOIST COMMAND INPUT FROM HCMD RELAY. | a. FAILS HIGH | HCMD WILL NOT FORCE BRAKES TO SET WHEN CONTACT TIMES OUT. PIC WILL DETECT ZERO SPEED AND SET BRAKES. | NO EFFECT. | 3 |
| | | | a. FAILS LOW | HOIST WILL OPERATE IN FLOAT MODE ONLY. | NO EFFECT. | 3 |
| | < 22-1 > (8AT24) | FLOAT MODE HOIST INPUT FROM FLOAT MODE POTENTIOMETER. | a. FAILS HIGH | HOIST FLOAT MODE, LOW, AND HIGH SPEED WILL OPERATE NORMALLY. | NO EFFECT. | 3 |

Table 17 (Page 11 of 14). **ELECTRICAL FMEA - PIC**

**System** 30-TON BRIDGE CRANE
**Subsystem** PIC
**Drawing No.** EDERER EB-2286 **Sheet No.**
**PMN** H70-1379-01

**Program** SPACE SHUTTLE

**Station Set/Facility Code** GD
**Date** MARCH 1991
**Reference Figure Used**
**Prepared By** P. CLUKEY, LSOC 51-22

| FIND NO. PART NO. | PART NAME | PART FUNCTION | a. FAILURE MODE b. CAUSE c. FMN d. DETECTION METHOD e. CORRECTING ACTION f. TIME TO EFFECT g. TIMEFRAME | FAILURE EFFECT ON SYSTEM PERFORMANCE | FAILURE EFFECT ON VEHICLE SYSTEMS AND/OR PERSONNEL SAFETY | CRIT CAT |
|---|---|---|---|---|---|---|
| | | | a. FAILS LOW | CANNOT RAISE LOAD IN FLOAT MODE. FLOAT MODE LOWER, LOW, AND HIGH SPEEDS WILL OPERATE NORMALLY. | NO EFFECT. | 3 |
| | <22-2> (8AT28) | FLOAT MODE LOWER INPUT FROM FLOAT MODE POTENTIOMETER. | a. FAILS HIGH | CANNOT RAISE LOAD IN FLOAT MODE. FLOAT MODE LOWER, LOW, AND HIGH SPEEDS WILL OPERATE NORMALLY. | NO EFFECT. | 3 |
| | | | a. FAILS LOW | CANNOT LOWER LOAD IN FLOAT MODE. FLOAT MODE HOIST, LOW, AND HIGH SPEEDS WILL OPERATE NORMALLY. | NO EFFECT. | 3 |
| | <22-3> (9T6) | HOIST LIMITS INPUT. | a. FAILS HIGH | HL RELAY WILL DISABLE DRIVES AND BRAKES WILL (REMAIN) SET. | NO EFFECT. | 3 |
| | | | a. FAILS LOW | PIC WILL NOT ENABLE DRIVES. BRAKES WILL (REMAIN) SET. | NO EFFECT. | 3 |
| | <22-4> (9S11) | HOIST NORTH LOOP CONTACTOR INPUT. | a. FAILS HIGH | PIC MAY SHUT DOWN HOIST FOR TACH IMBALANCE DURING SINGLE DRIVE OPERATIONS. | NO EFFECT. | 3 |
| | | | a. FAILS LOW | NORTH DRIVE WILL DROP OFF LINE. PIC WILL DETECT ARMATURE CURRENT IMBALANCE AND SHUT DOWN HOIST. | NO EFFECT. | 3 |
| | <22-5> (9S13) | HOIST SOUTH LOOP CONTACTOR INPUT. | a. FAILS HIGH | PIC MAY SHUT DOWN HOIST FOR TACH IMBALANCE DURING SINGLE DRIVE OPERATIONS. | NO EFFECT. | 3 |
| | | | a. FAILS LOW | SOUTH DRIVE WILL DROP OFF LINE. PIC WILL DETECT ARMATURE CURRENT IMBALANCE AND SHUT DOWN HOIST. | NO EFFECT. | 3 |

Table 17 (Page 12 of 14). **ELECTRICAL FMEA - PIC**

**System** 30-TON BRIDGE CRANE
**Subsystem** PIC
**Drawing No.** EDERER EB-2286 **Sheet No.**
**PMN** H70-1379-01

**Program** SPACE SHUTTLE

**Station Set/Facility Code** GD
**Date** MARCH 1991
**Reference Figure Used**
**Prepared By** P. CLUKEY, LSOC 51-22

| FIND NO. PART NO. | PART NAME | PART FUNCTION | a. FAILURE MODE<br>b. CAUSE<br>c. FMN<br>d. DETECTION METHOD<br>e. CORRECTING ACTION<br>f. TIME TO EFFECT<br>g. TIMEFRAME | FAILURE EFFECT ON SYSTEM PERFORMANCE | FAILURE EFFECT ON VEHICLE SYSTEMS AND/OR PERSONNEL SAFETY | CRIT CAT |
|---|---|---|---|---|---|---|
| | < 22-6 > (9S22) | HOIST NORTH MOTOR OVERTEMP SHUT DOWN INPUT. | a. FAILS HIGH | PIC WILL NOT SHUT DOWN HOIST IF OVERTEMP OCCURS. REQUIRES DOUBLE FAILURE. OVERTEMP WILL BE INDICATED ON CAB CONTROL PANEL. | NO EFFECT. | 3 |
| | | | a. FAILS LOW | HOIST WILL NOT RUN. | NO EFFECT. | 3 |
| | < 22-7 > (9S29) | HOIST SOUTH MOTOR OVERTEMP SHUT DOWN INPUT. | a. FAILS HIGH | PIC WILL NOT SHUT DOWN HOIST IF OVERTEMP OCCURS. REQUIRES DOUBLE FAILURE. OVERTEMP WILL BE INDICATED ON CAB CONTROL PANEL. | NO EFFECT. | 3 |
| | | | a. FAILS LOW | HOIST WILL NOT RUN. | NO EFFECT. | 3 |
| LOWER SLOT 25 502-02960-00 | AC OUTPUT MODULE. | CONVERTS DIGITAL COMMANDS FROM PIC TO ANALOG OUTPUT FORMAT. | | | | |
| | < 25-0 > (9D8) | HOIST NORTH DRIVE INTERLOCK OUTPUT. | a. FAILS HIGH | HNBS CONTACT WILL BREAK NORTH INTERLOCK CIRCUIT AND DISABLE NORTH DRIVE MOTOR. | NO EFFECT. | 3 |
| | | | a. FAILS LOW | HOIST NORTH MOTOR WILL DROP OFF LINE. TORQUE WILL NOT BE PROVED OR PIC WILL DETECT CURRENT IMBALANCE AND SHUT DOWN HOIST. | NO EFFECT. | 3 |
| | < 25-1 > (9D9) | HOIST SOUTH DRIVE INTERLOCK OUTPUT. | a. FAILS HIGH | HSBS CONTACT WILL BREAK SOUTH INTERLOCK CIRCUIT AND DISABLE SOUTH DRIVE MOTOR. | NO EFFECT. | 3 |
| | | | a. FAILS LOW | HOIST SOUTH MOTOR WILL DROP OFF LINE. TORQUE WILL NOT BE PROVED OR PIC WILL DETECT CURRENT IMBALANCE AND SHUT DOWN HOIST. | NO EFFECT. | 3 |

Table 17 (Page 13 of 14). **ELECTRICAL FMEA - PIC**

**System** 30-TON BRIDGE CRANE
**Subsystem** PIC
**Drawing No.** EDERER EB-2286 **Sheet No.**
**PMN** H70-1379-01

**Program** SPACE SHUTTLE

**Station Set/Facility Code** GD
**Date** MARCH 1991
**Reference Figure Used**
**Prepared By** P. CLUKEY, LSOC 51-22

| FIND NO. PART NO. | PART NAME | PART FUNCTION | a. FAILURE MODE b. CAUSE c. FMN d. DETECTION METHOD e. CORRECTING ACTION f. TIME TO EFFECT g. TIMEFRAME | FAILURE EFFECT ON SYSTEM PERFORMANCE | FAILURE EFFECT ON VEHICLE SYSTEMS AND/OR PERSONNEL SAFETY | CRIT CAT |
|---|---|---|---|---|---|---|
| | < 25-2 > (9D14) | HOIST DRIVE ENABLE OUTPUT. | a. FAILS HIGH | WHEN STOPPING, THE HOIST WILL DECELERATE TO ZERO SPEED AND THE BRAKES WILL SET. THE DRIVES WILL REMAIN ENABLED UNTIL THE HCMD CONTACT TIMES OUT. | NO EFFECT. | 3 |
| | | | a. FAILS LOW | HOIST WILL NOT OPERATE. | NO EFFECT. | 3 |
| | < 25-3 > (9D15) | HOIST BRAKE CONTACT OUTPUT. | a. FAILS HIGH | WHEN STOPPING, THE HOIST WILL DECELERATE TO ZERO AND HOLD POSITION UNTIL HCMD CONTACT TIMES OUT, SETTING THE BRAKES. | NO EFFECT. | 3 |
| | | | a. FAILS LOW | BRAKES WILL NOT RELEASE. HOIST WILL NOT OPERATE. | NO EFFECT. | 3 |
| | < 25-4 > (9D16) | HOIST BRAKE FORCING CONTACTOR OUTPUT. | a. FAILS HIGH | POSSIBLE DAMAGE TO HOIST MOTOR BRAKE COILS FROM CONTINUOUS HIGH CURRENT. | NO EFFECT. | 3 |
| | | | a. FAILS LOW | HOIST MOTOR BRAKES MAY NOT FULLY RELEASE. COULD CAUSE EXCESSIVE BRAKE WEAR. | NO EFFECT. | 3 |
| | < 25-5 > (9G31) | DRIVE LOAD IMBALANCE INDICATOR OUTPUT. | a. FAILS HIGH | DRIVE LOAD IMBALANCE INDICATOR CONTINUOUSLY ILLUMINATED. | NO EFFECT. | 3 |
| | | | a. FAILS LOW | INDICATOR WILL NOT ILLUMINATE WHEN LOAD IMBALANCE OCCURS. DOUBLE FAILURE REQUIRED. | NO EFFECT. | 3 |
| | < 25-6 > (3J29) | COMPUTER FAULT INDICATOR OUTPUT. | a. FAILS HIGH | COMPUTER FAULT INDICATOR CONTINUOUSLY ILLUMINATED. | NO EFFECT. | 3 |
| | | | a. FAILS LOW | INDICATOR WILL NOT ILLUMINATE WHEN COMPUTER FAULT OCCURS. DOUBLE FAILURE REQUIRED. | NO EFFECT. | 3 |

Table 17 (Page 14 of 14). **ELECTRICAL FMEA - PIC**

| | | | | | | |
|---|---|---|---|---|---|---|
| **System** 30-TON BRIDGE CRANE<br>**Subsystem** PIC<br>**Drawing No.** EDERER EB-2286 **Sheet No.**<br>**PMN** H70-1379-01 | | | **Program** SPACE SHUTTLE | | **Station Set/Facility Code** GD<br>**Date** MARCH 1991<br>**Reference Figure Used**<br>**Prepared By** P. CLUKEY, LSOC 51-22 | |
| **FIND NO. PART NO.** | **PART NAME** | **PART FUNCTION** | a. FAILURE MODE<br>b. CAUSE<br>c. FMN<br>d. DETECTION METHOD<br>e. CORRECTING ACTION<br>f. TIME TO EFFECT<br>g. TIMEFRAME | **FAILURE EFFECT ON SYSTEM PERFORMANCE** | **FAILURE EFFECT ON VEHICLE SYSTEMS AND/OR PERSONNEL SAFETY** | **CRIT CAT** |
| UPPER SLOT 13<br>502-02820-01 | DIGITIZING REFERENCE MODULE | PROVIDES REFERENCE, QUADRATURE, AND SYN-CHRONIZING SIGNAL FOR RESOLVERS AND µP DIGITIZING MODULE. | a. LOSS OF OUTPUT SIGNAL | PIC WILL DETECT LOSS OF SIGNAL AND SHUT DOWN HOIST, SET BRAKES, AND ILLUMINATE COMPUTER ERROR LAMP ON CONTROL PANEL. | NO EFFECT. | 3 |
| UPPER SLOT 16<br>502-02819-00 | µP DIGITIZING MODULE | CONVERT ANALOG RESOLVER OUTPUT SIGANL TO DIGITAL FORMAT. | a. LOSS OF INPUT SIGNAL | PIC WILL DETECT LOSS OF SIGNAL AND SHUT DOWN HOIST, SET BRAKES, AND ILLUMINATE COMPUTER ERROR LAMP ON CONTROL PANEL. | NO EFFECT. | 3 |

## 5.3 FLEXHOSE FMEA

There are no flexhoses associated with this system.

## 5.4 ORIFICE FMEA

There are no orifices associated with this system.

## 5.5 FILTER FMEA

There are no filters associated with this system.

## 6.0 CRITICAL ITEMS LIST

There were three (3) Critical Items identified in this system. The Critical Items are summarized on the following Critical Hardware List (Worksheet 5122-011) and associated Critical Item Sheets (Worksheet 5122-012).

## 6.1 CRITICAL HARDWARE LIST

The Critical Items identified in this system are summarized on the following Critical Hardware List (Worksheet 5122-011).

B/L: 380.00
SYS: 30-TON
BRIDGE
CRANES
OPF HB-3

Critical Hardware List

Project Element: OPF-Cranes & Hoists

Subsystem: 30-Ton Bridge Cranes, OPF HB-3

Table 18. **Critical Hardware List**

| LRU PART NUMBER/ REFERENCE DESIGNATOR | LRU PART NAME | QTY (per subsystem) | LRU CRITICALITY |
|---|---|---|---|
| FMEA P/N | FMEA PART NAME/FM NO. | QTY (per LRU) | FM CRITICALITY |
| AN-DC50 | BRIDGE TACHOMETER | 2 | 2 |
| AN-DC50 | BRIDGE TACHOMETER 09FY091-007.011 | 1 | 2 |
| AN-DC50 | TROLLEY TACHOMETER | 2 | 2 |
| AN-DC50 | TROLLEY TACHOMETER 09FY091-007.014 | 1 | 2 |
| RN60C | BRIDGE TACHOMETER SCALING RESISTOR | 2 | 2 |
| RN60C | BRIDGE TACHOMETER SCALING RESISTOR 09FY091-007.012 | 1 | 2 |
| RN60C | TROLLEY TACHOMETER SCALING RESISTOR | 2 | 2 |
| RN60C | TROLLEY TACHOMETER SCALING RESISTOR 09FY091-007.015 | 1 | 2 |
| EC-1890 | BRIDGE TRAVEL INTERFACE MODULE | 2 | 2 |
| EC-1890 | BRIDGE TRAVEL INTERFACE MODULE 09FY091-007.013 | 1 | 2 |
| EC-1890 | TROLLEY TRAVEL INTER-FACE MODULE | 2 | 2 |
| EC-1890 | TROLLEY TRAVEL INTERFACE MODULE 09FY091-007.016 | 1 | 2 |

## 6.2 CRITICAL ITEMS SHEETS

The rationale for accepting the risk of retaining the identified Critical Items is on the following Critical Items Sheets (Worksheet 5122-012).

B/L: 380.00
SYS: 30-TON BRIDGE CRANES OPF HB-3

**Critical Item:** Tachometer, Bridge/Trolley (4 Items Total, 2 per Crane)

**Find Number:** AN-DC50

**Criticality Category:** 2

| | | | |
|---|---|---|---|
| **SAA No:** | 09FY091-007 | **System/Area:** | 30-Ton Bridge Cranes/ OPF HB-3 |
| **NASA Part No:** | NA | **PMN/ Name:** | H70-1379-01/ 30-Ton Bridge Crane |
| **Mfg/ Part No:** | General Electric/ AN-DC50 | **Drawing/ Sheet No:** | Ederer EB-2286/ 13, 16 |

**Function**: Generates feedback voltage to Travel Interface Module for control of travel speed.

**Critical Failure Mode/Failure Mode No**: Low or No Output/09FY091-007.011 (Bridge)
09FY091-007.014 (Trolley)

**Failure Cause**: Armature winding shorted, open, stuck or worn brush.

**Failure Effect**: Tachometer will generate a lower than expected feedback voltage. Motor controller will compensate by increasing armature current to increase motor speed and tachometer feedback voltage. Worst case would be a complete short across the windings or an open winding, either one resulting in a total loss of feedback voltage. Once enabled, the motor controller will cause an uncontrolled acceleration to 10-33% of maximum speed before the motor controller senses an armature overvoltage and shuts down the drive. The shutdown will occur within 1 second of loss of tach feedback voltage. Possible damage to flight hardware if load is within 3 inches of obstruction (trolley) or within 1 1/2 inches (bridge) when failure occurs.

## ACCEPTANCE RATIONALE

**Design:**

- These tachometers are off-the-shelf hardware items selected by the crane manufacturer for this application.

| | RATED | ACTUAL BRIDGE | ACTUAL TROLLEY |
|---|---|---|---|
| Max. Output Voltage | 250V | 32.5V | 42.5V |
| Max. RPM | 5000 | 650 | 850 |
| Min. Load Resistance | 20KΩ | 121KΩ | 112KΩ |

**Test:**

- Pre-operational set up (positioning sling/hook over the load) to support lifting operations in OMI Q3516 verifies proper operation of crane components and all functions.
- A full operational test of the crane is performed monthly (no load) in accordance with OMI Q6331.
- An operational check of the crane is performed under full rated load as part of the annual load test in accordance with OMI Q6331.
- OMRSD File VI will require verification of current load test annually.

**Inspection:**

- Bridge and Trolley tachometers will be inspected per OMI Q6331 for the following:
  - Faulty or burned wiring insulation
  - Damage to conduit connections, mounting hardware, and housing
  - Brushes worn to less than 3/8 inch

**Failure History:**

- The PRACA database was researched and no failure data was found on this component in the critical failure mode.
- The GIDEP failure data interchange system was researched and no failure data was found on this component in the critical failure mode.

**Operational Use:**

- Correcting Action:

  There is no action which can be taken to mitigate the failure effect.

- Timeframe:

  Since no correcting action is available, timeframe does not apply.

B/L: 380.00
SYS: 30-TON BRIDGE CRANES OPF HB-3

**Critical Item:** Resistor, Bridge/Trolley Tachometer Scaling (4 Items Total, 2 per Crane)

**Find Number:** RN60C

**Criticality Category:** 2

| | | | |
|---|---|---|---|
| **SAA No:** | 09FY091-007 | **System/Area:** | 30-Ton Bridge Cranes/ OPF HB-3 |
| **NASA Part No:** | NA | **PMN/ Name:** | H70-1379-01/ 30-Ton Bridge Crane |
| **Mfg/ Part No:** | Dale, TRW, Mepco/ RN60C | **Drawing/ Sheet No:** | Ederer EB-2286/ 13, 16 |

**Function:** Establishes part of a voltage divider circuit to scale the Bridge/Trolley Tachometer feedback voltage.

**Critical Failure Mode/Failure Mode No:** Fails Open/09FY091-007.012 (Bridge)
09FY091-007.015 (Trolley)

**Failure Cause:** Corrosion, Fatigue.

**Failure Effect:** Loss of tachometer feedback voltage to Travel Interface Module. Motor controller will compensate by increasing armature current to increase motor speed and tachometer feedback voltage. Once enabled, the motor controller will cause an uncontrolled acceleration to 10-33% of maximum speed before the motor controller senses an armature overvoltage and shuts down the drive. The shutdown will occur within 1 second of loss of tach feedback voltage. Possible damage to flight hardware if load is within 3 inches of obstruction (trolley) or within 1 1/2 inches (bridge) when failure occurs.

## ACCEPTANCE RATIONALE

**Design:**

- Metal Film Conductor
- Stability 50 ppm/°C

- 50 samples passed vibration (1000g, max.) and shock (75g, max.) tolerance tests with no failures.
- These resistors are off-the-shelf hardware items selected by the crane manufacturer for this application.

| | RATED | ACTUAL BRIDGE | ACTUAL TROLLEY |
|---|---|---|---|
| Power | 125mW | 9mW | 17mW |
| Max. Working Voltage | 200V | 33V | 43V |

**Test**:

- Pre-operational set up (positioning sling/hook over the load) to support lifting operations in OMI Q3516 verifies proper operation of crane components and all functions.
- A full operational test of the crane is performed monthly (no load) in accordance with OMI Q6331.
- An operational check of the crane is performed under full rated load as part of the annual load test in accordance with OMI Q6331.
- OMRSD File VI will require verification of current load test annually.

**Inspection**:

- The Bridge and Trolley electrical wiring is visually inspected annually for cracking, damage, or loose screws on terminal strips in accordance with OMI Q3516.

**Failure History**:

- The PRACA database was researched and no failure data was found on this component in the critical failure mode.
- The GIDEP failure data interchange system was researched and no failure data was found on this component in the critical failure mode.

**Operational Use**:

- Correcting Action:

  There is no action which can be taken to mitigate the failure effect.

- Timeframe:

  Since no correcting action is available, timeframe does not apply.

B/L: 380.00
SYS: 30-TON BRIDGE CRANES OPF HB-3

**Critical Item**: Travel Interface Module, Bridge/Trolley (4 Items Total, 2 per Crane)

**Find Number**: BTIM, TTIM

**Criticality Category**: 2

| | | | |
|---|---|---|---|
| **SAA No:** | 09FY091-007 | **System/Area:** | 30-Ton Bridge Cranes/ OPF HB-3 |
| **NASA Part No:** | NA | **PMN/ Name:** | H70-1379-01/ 30-Ton Bridge Crane |
| **Mfg/ Part No:** | Ederer Inc. EC-1890 | **Drawing/ Sheet No:** | Ederer EB-2286/ 13, 16 |

**Function**: Provides an interface between travel drive controls, tachometer, and travel motor controller.

**Critical Failure Mode/Failure Mode No**: Fails Open/09FY091-007.013 (Bridge)
09FY091-007.016 (Trolley)

**Failure Cause**: Component failure

**Failure Effect**: Loss of tachometer feedback voltage to Travel Interface Module. Motor controller will compensate by increasing armature current to increase motor speed and tachometer feedback voltage. Once enabled, the motor controller will cause an uncontrolled acceleration to 10-33% of maximum speed before the motor controller senses an armature overvoltage and shuts down the drive. The shutdown will occur within 1 second of loss of tach feedback voltage. Possible damage to flight hardware if load is within 3 inches of obstruction (trolley) or within 1 1/2 inches (bridge) when failure occurs.

## ACCEPTANCE RATIONALE

**Design**:

- Single board electronic module designed and built by the crane manufacturer (Ederer) using off-the-shelf components.
- The RC4136 active op-amp characteristics include a high common-mode input voltage range and absence of latch-up, making it ideal for its use in a voltage-follower circuit.

| | RATED | ACTUAL |
|---|---|---|
| **RC4136 OP AMP (TEXAS INSTRUMENTS)** | | |
| Supply Voltage | +/- 18V | +/- 15V |
| Differential Input Voltage | +/- 30V | +/- 8V |
| **RN55C RESISTORS (DALE)** | | |
| Max. Working Voltage | 200V | < 1V |
| Power | 125mW | < 1mW |
| **1N4004 DIODES** | | |
| Max. Working Voltage | 600V | 23V |
| **CAPACITORS (THOMPSON)** | | |
| Max. Working Voltage | 63V | 8V |

**Test:**

- Pre-operational set up (positioning sling/hook over the load) to support lifting operations in OMI Q3516 verifies proper operation of crane components and all functions.
- A full operational test of the crane is performed monthly (no load) in accordance with OMI Q6331.
- An operational check of the crane is performed under full rated load as part of the annual load test in accordance with OMI Q6331.
- OMRSD File VI will require verification of current load test annually.

**Inspection:**

- The Bridge and Trolley electrical wiring is visually inspected annually for cracking, damage, or loose screws on terminal strips in accordance with OMI Q3516.

**Failure History:**

- The PRACA database was researched and no failure data was found on this component in the critical failure mode.
- The GIDEP failure data interchange system was researched and no failure data was found on this component in the critical failure mode.

**Operational Use**:

- Correcting Action:

  There is no action which can be taken to mitigate the failure effect.

- Timeframe:

  Since no correcting action is available, timeframe does not apply.

## 7.0 HAZARD ANALYSIS

System Safety Engineering has completed an analysis of the OPF HB-3 30-Ton bridge cranes. A KSC/RT Safety and Reliability Hazard Data Base search has been conducted by Baseline Number (B/L), Program Model Number (PMN), and Station Set (SS). Associated drawings were reviewed and a walkdown of the existing platforms was performed. The system was analyzed with emphasis on mechanical aspects. There were no hazards identified during this analysis. The attached Hazard Identification Data Sheet (KSC Form 21-428) provides additional information.

A qualitative fault tree analysis was developed with the top event identified as personnel injury, loss of life, loss of vehicle and/or damage to flight hardware. All potential hazardous conditions leading to this event have been assessed on the attached Space Shuttle System Hazard Analysis worksheet.

SAA09FY091-007

# HAZARD IDENTIFICATION DATA

| SYSTEM/SUBSYSTEM (Title) | | PMN | |
|---|---|---|---|
| SAA09FY091-007<br>30-TON BRIDGE CRANES OPF HB-3 | B/L<br>380.00 | SEE SAA<br>COVER SHEET | SS<br>GD |

The following hazard identification criteria were considered during the hazard analysis:

DESIGN SAFETY CHECKLIST SECTION NUMBER AND TITLE:

☐ ☐

☐ ☐

☐ ☐

☐ HAZARD ANALYSIS ELEMENTS (GP-1045, APPENDIX B)
☒ FAILURE MODE AND EFFECT ANALYSIS (FMEA)
☒ FUNCTIONAL AND PHYSICAL INTERFACES
☒ OCCUPATIONAL SAFETY AND HEALTH STANDARDS (OSHA)
☒ SW-E-0002, SPACE SHUTTLE PROGRAM GSE GENERAL DESIGN REQUIREMENTS

The Hazard Analysis was based on the following system documentation (list documents here):

| Document/ Drawing No. | Rev | Title |
|---|---|---|
| NSTS 22254 | | Methodology for Conduct of NSTS Hazard Analyses |
| GP1098F | | Ground Operation Safety Plan |
| ANSI B30.17 | | Overhead and Gantry Cranes (Top Running Bridge, Single Girder Underhung Hoist) |
| F-1828 | | Mechanical Operation and Maintenance Manual for Ederer Corporation 30-Ton Bridge Crane Serial No. F-1828 |
| NSS/GO 1740.9 | | NASA Safety Standards for Lifting Devices and Equipment |
| OMI Q3516 | BASIC-1 | Operation Instructions for the 30-Ton Cranes, OPF-3 |
| OMI G6331 | BASIC | Maintenance Instructions for the 30-Ton Bridge Crane, OMRF |

NO HAZARDS WERE FOUND DURING THIS ANALYSIS

System Safety Engineer

Paul R. Schuch 4-5-91
Supervisor, System Safety Engineering



KSC FORM 21-428 (12/77)

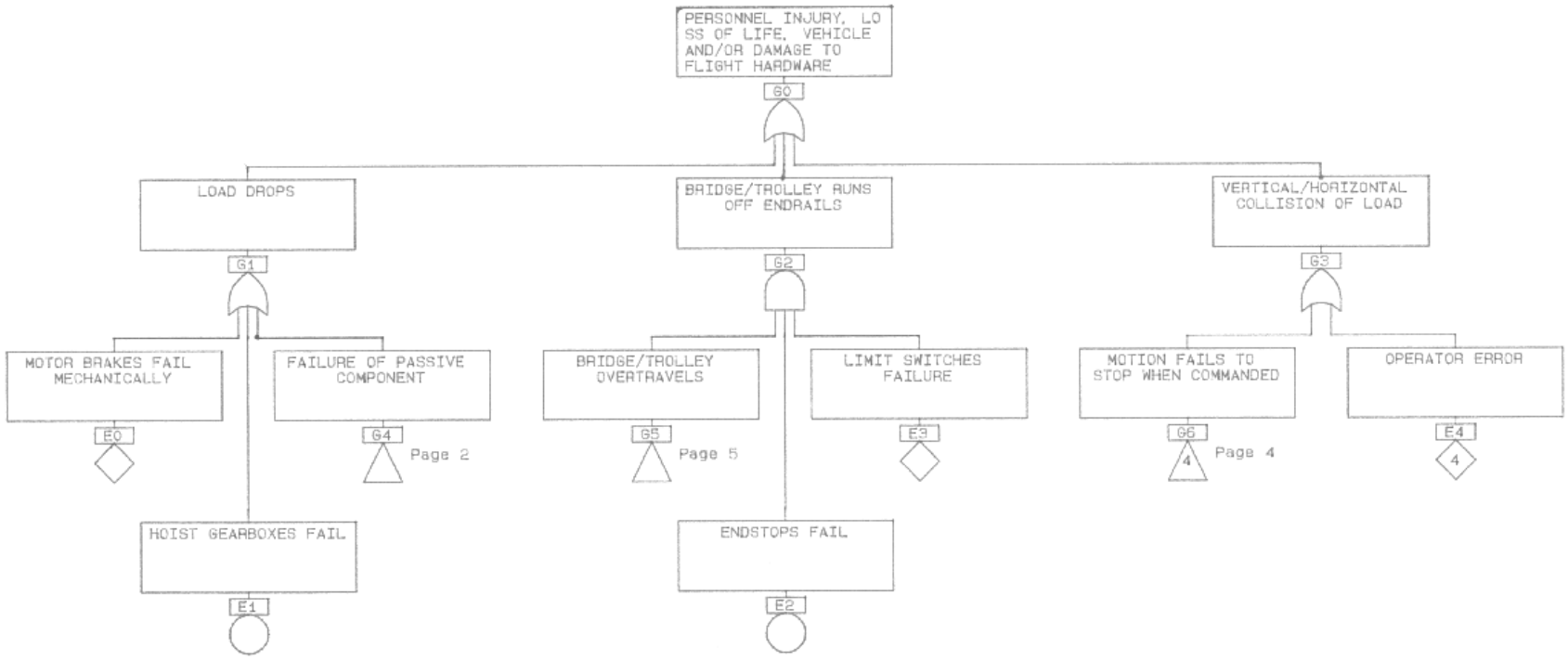


| OPF HB-3 30 TON BRIDGE CRANES | A: \FAULTREE\30TON.CAF | 4/05/91 | Page 1 |
|---|---|---|---|

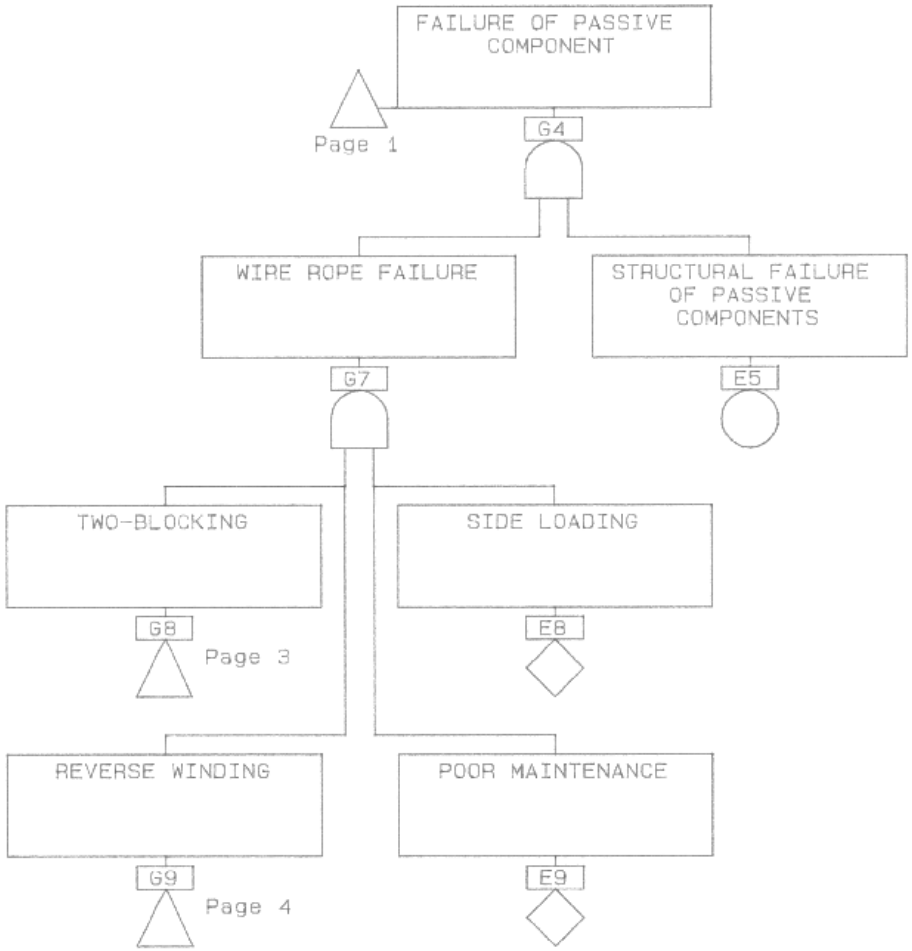


| | | | |
|---|---|---|---|
| OPF HB-3 30 TON BRIDGE CRANES | A: \FAULTREE\30TON.CAF | 4/05/91 | Page 2 |

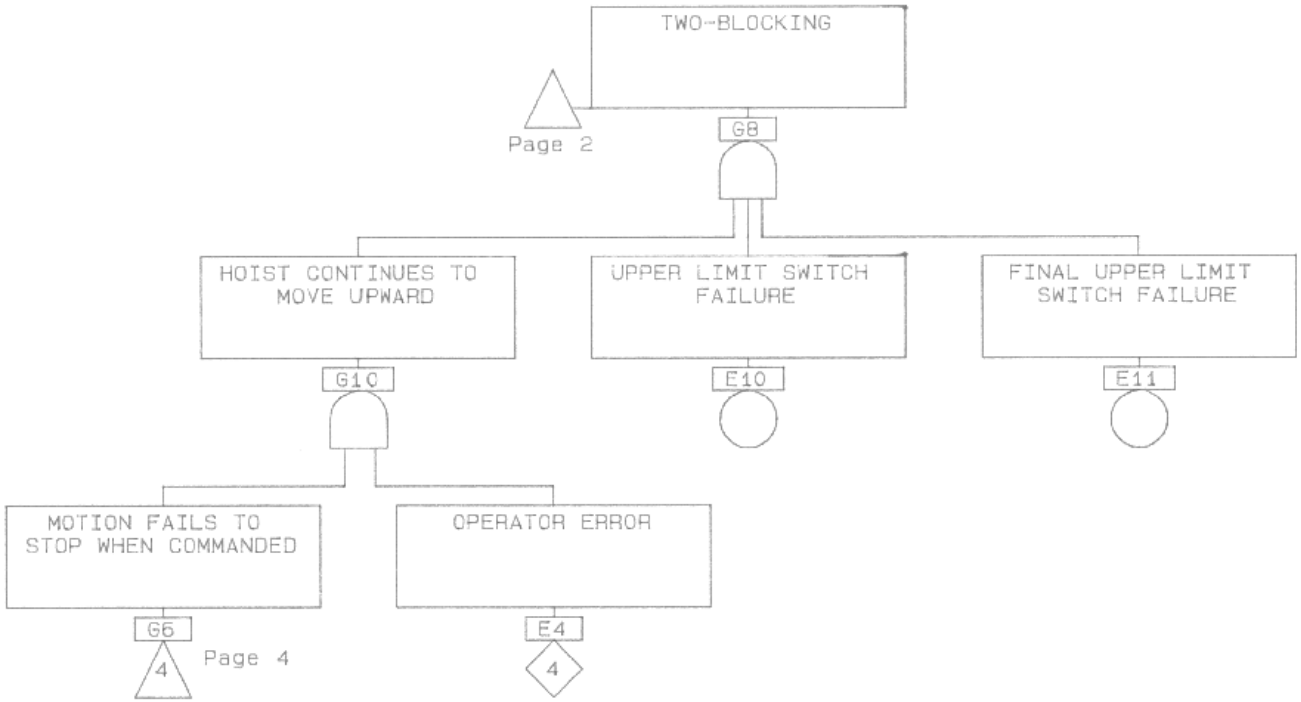


| | | | |
|---|---|---|---|
| OPF HB-3 30 TON BRIDGE CRANES | A: \FAULTREE\30TON.CAF | 4/05/91 | Page 3 |

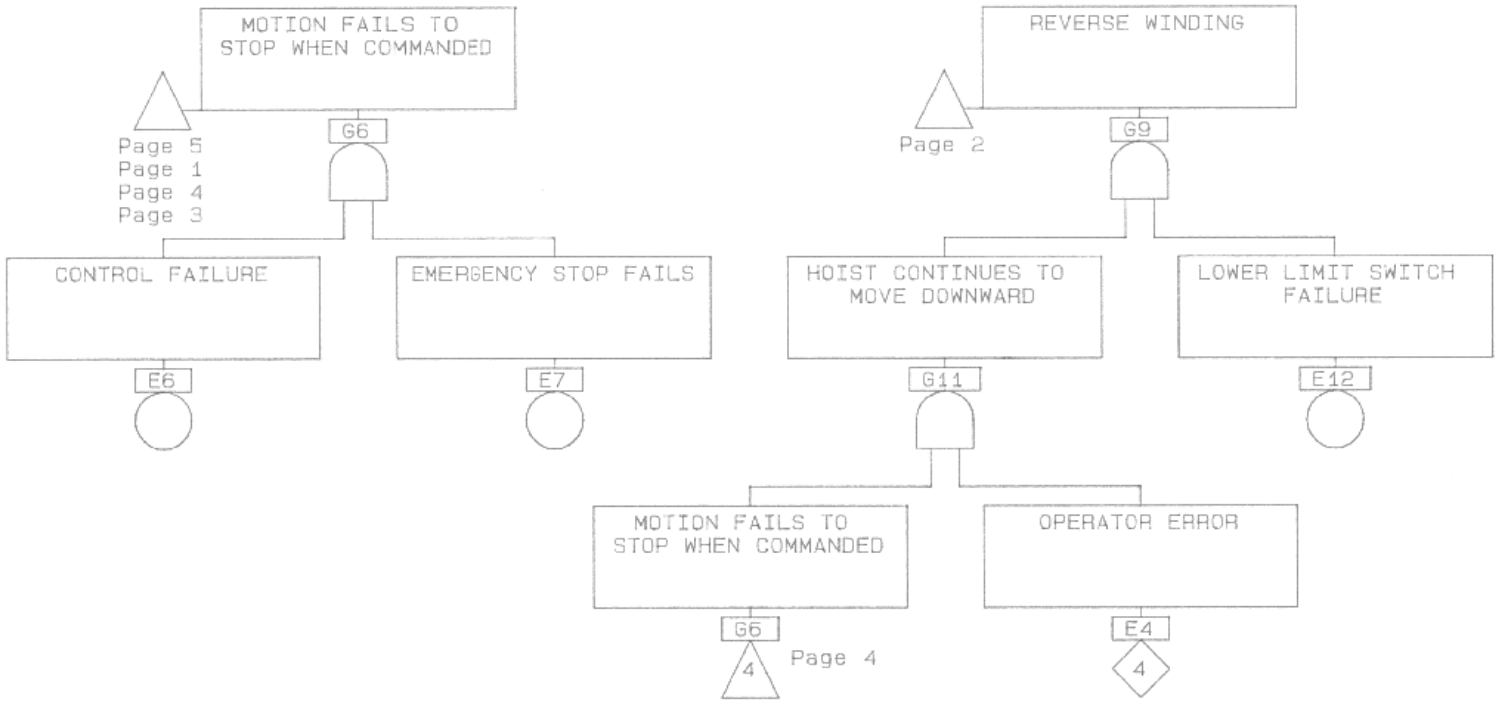


| | | | |
|---|---|---|---|
| OPF HB-3 30 TON BRIDGE CRANES | A: \FAULTREE\30TON.CAF | 4/05/91 | Page 4 |

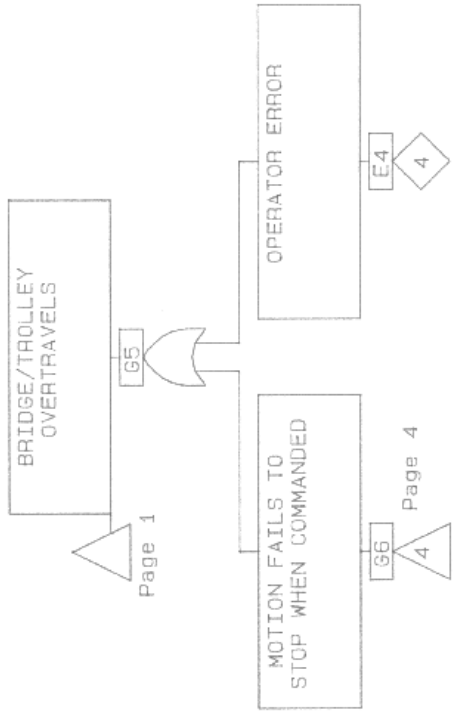


OPF HB-3 30 TON BRIDGE CRANES | A: \FAULTREE\30TON.CAF | 4/05/91 | Page 5

Table 19 (Page 1 of 5). **SYSTEM HAZARD ANALYSIS**

**Phase/Mode Function** SAA09FY091-007

**Task/Operation or Facility** 30-Ton Brigde Crane OPF HB-3

**Date** March 19, 1991

**Prepared by** Pierre Trudel

| HAZARDOUS CONDITION | HAZARD CAUSE | HAZARD EFFECT | SAFETY/ENGINEERING REQUIREMENTS | HAZARD ELIMINATION/CONTROL PROVISIONS |
|---|---|---|---|---|
| G1. LOAD DROPS | E0. MOTOR BRAKES FAILS MECHANICALLY | G0. PERSONNEL INJURY, LOSS OF LIFE AND/OR DAMAGE TO FLIGHT HARD-WARE | NSS GO 1740.9, para. 2.2.6.e<br>Hoist shall be provided with 2 means of braking: a control brake and a holding brake.For critical cranes, each brakes shall be able to bring the full rated load to a complete stop. | The Ederer 30-ton bridge crane is equipped with dual motor brakes able of holding the full 30-ton load indi-vidually. |
| | **OR** | | | |
| | E1. HOIST GEARBOXES FAIL | | NSS GO 1740.9, para.2.3.6.c<br>Gearing shall be designed and manufactured to comply with the latest AGMA standards. | The Ederer 30-ton hoist gearboxes are manufactured to comply with the latest AGMA standards. |
| | **OR** | | | |
| | G4. FAILURE OF PASSIVE COMPO-NENT | | | SEE HAZARDOUS CONDITION G4 FOR FURTHER DEVELOPMENT. |
| G4. FAILURE OF PASSIVE COMPO-NENT | G7. WIRE ROPE FAILURE | G1. LOAD DROPS | | SEE HAZARDOUS CONDITION G7 FOR FURTHER DEVELOPMENT. |
| | **AND** | | | |
| | E5. STRUCTURAL FAILURE OF PASSIVE COMPO-NENTS | | NSS GO 1740.9, para. 2.4<br>Passive component will be inspected per NSS GO 1740.9. | Pre-operational walkdown per OMI Q3516 sequence 01 and 02.<br>The Ederer 30-ton bridge crane will be maintained as prescribed in OMI Q6331. |
| G7. WIRE ROPE FAILURE | G8. TWO-BLOCKING | G4. FAILURE OF PASSIVE COMPO-NENTS | | SEE HAZARDOUS CONDITION G8 FOR FURTHER DEVELOPMENT. |
| | **AND** | | | |

Table 19 (Page 2 of 5). **SYSTEM HAZARD ANALYSIS**

**Phase/Mode Function** SAA09FY091-007 | **Date** March 19, 1991

**Task/Operation or Facility** 30-Ton Brigde Crane OPF HB-3 | **Prepared by** Pierre Trudel

| HAZARDOUS CONDITION | HAZARD CAUSE | HAZARD EFFECT | SAFETY/ENGINEERING REQUIREMENTS | HAZARD ELIMINATION/CONTROL PROVISIONS |
|---|---|---|---|---|
| | G9. REVERSE WINDING<br><br>**AND** | | | SEE HAZARDOUS CONDITION G9 FOR FURTHER DEVELOPMENT. |
| | E8. SIDE LOADING<br><br>**AND** | | NSS GO 1740.9, para. 2.6.1<br>Only certified and trained operator shall be authorized to use/operate the 30-ton bridge crane. | Operator shall have certification no. 94 to operate the crane.<br>OMI Q3516 verifies that two ground observer are present during crane operations. |
| | E9. POOR MAINTENANCE | | NSS GO 1740.9, para. 2.4.4.e<br>Wire rope shall be inspected each day of use.<br>NSS GO 1740.9, para. 2.4.5.n<br>Wire rope shall be inspected monthly for reduction in diameters,kinks, and/or broken, worn wire. | OMI Q6331 rev. BASIC sequence 03-0006 describes proper procedure for wire rope inspection. |
| G8. TWO-BLOCKING | G10. HOIST CONTINUES TO MOVE UPWARD<br><br>**AND** | G7. WIRE ROPE FAILURE | | SEE HAZARDOUS CONDITION G10 FOR FURTHER DEVELOPMENT. |
| | E10 UPPER LIMIT SWITCH FAILURE<br><br>**AND** | | NSS GO 1740.9, para. 2.2.7.i<br>Critical hoists shall be provided with dual upper limit switches. | The Ederer 30-ton bridge crane is equipped with 2 upper limit switches: a weight limit switch and a rotary limit switch. |
| | E11. FINAL UPPER LIMIT SWITCH FAILURE | | NSS GO 1740.9, para. 2.2.7.i<br>Critical hoists shall be provided with dual upper limit switches. | The Ederer 30-ton bridge crane is equipped with 2 upper limit switches: a weight limit switch and a rotary limit switch. |

Table 19 (Page 3 of 5). **SYSTEM HAZARD ANALYSIS**

**Phase/Mode Function** SAA09FY091-007

**Task/Operation or Facility** 30-Ton Brigde Crane OPF HB-3

**Date** March 19, 1991

**Prepared by** Pierre Trudel

| HAZARDOUS CONDITION | HAZARD CAUSE | HAZARD EFFECT | SAFETY/ENGINEERING REQUIREMENTS | HAZARD ELIMINATION/CONTROL PROVISIONS |
|---|---|---|---|---|
| G10. HOIST CONTINUES TO MOVE UPWARD | G6. MOTION FAILS TO STOP WHEN COMMANDED. | G8. TWO-BLOCKING. | | SEE HAZARDOUS CONDITION G6 FOR FURTHER DEVELOPMENT. |
| | OR | | | |
| | E4 OPERATOR ERROR | | NSS GO 1740.9, para. 2.6.1<br>Only certified and trained operator shall be authorized to use/operate the bridge crane. | Crane operators shall have certification no. 94 to operate the crane.<br>OMI Q3516 verifies that 2 ground observers are present during crane operations. |
| G6. MOTION FAILS TO STOP WHEN COMMANDED | E6. CONTROL FAILURE | G10. HOIST CONTINUES TO MOVE UPWARD | NSS GO 1740.9, para. 2.3.6.c<br>Control shall return to the off position when the operator relieves pressure. | Bridge, trolley, and hoist controls are tested monthly per OMI Q6331. |
| | AND | | | |
| | E7. EMERGENCY STOP FAILS | | NSS GO 1740.9, para. 4.2.7.a<br>A red emergency stop pushbutton shall be provided to operate the mainline contactor or the main circuit breaker. | There are four emergency stop pushbuttons accessible by ground observers as well as one in the cab.<br>OMI Q3516 verifies that the Emergency stop pushbuttons are functioning and that a ground observer is located nearby. |
| G9. REVERSE WINDING | G11. HOIST CONTINUES TO MOVE DOWNWARD | G7. WIRE ROPE FAILURE | | SEE HAZARDOUS CONDITION G11 FOR FURTHER DEVELOPMENT. |
| | AND | | | |
| | E12. LOWER LIMIT SWITCH FAILURE | | NSS GO 1740.9, para. 2.2.7.j<br>For critical cranes, lower limit switch to prevent reverse winding of the wire rope will be provided. | The Ederer 30-ton bridge crane has one rotary lower limit switch. |

Table 19 (Page 4 of 5). **SYSTEM HAZARD ANALYSIS**

**Phase/Mode Function** SAA09FY091-007 | **Date** March 19, 1991

**Task/Operation or Facility** 30-Ton Brigde Crane OPF HB-3 | **Prepared by** Pierre Trudel

| HAZARDOUS CONDITION | HAZARD CAUSE | HAZARD EFFECT | SAFETY/ENGINEERING REQUIREMENTS | HAZARD ELIMINATION/CONTROL PROVISIONS |
|---|---|---|---|---|
| G11. HOIST CONTINUES TO MOVE DOWNWARD | G6. MOTION FAILS TO STOP WHEN COMMANDED | G9. REVERSE WINDING | | SEE HAZARDOUS CONDITION G6 FOR FURTHER DEVELOPMENT |
| | **AND** | | | |
| | E4 OPERATOR ERROR | | | SEE HAZARD CAUSE E4 FOR FURTHER DEVELOPMENT. |
| G2. BRIDGE/ TROLLEY RUNS OFF ENDRAILS | G5. BRIDGE/ TROLLEY OVERTRAVELS | G0. PERSONNEL INJURY, LOSS OF LIFE AND/OR DAMAGE TO FLIGHT HARDWARE | | SEE HAZARDOUS CONDITION G5 FOR FURTHER DEVELOPMENT. |
| | **AND** | | | |
| | E2. ENDSTOPS FAIL | | ANSI/ASME B30.17d, para. 17.1.8.2 (a) and 17.1.8.3 (a)<br>A power driven bridge/trolley should be provided with bumpers. If bumpers are provided, they should be mounted so that there is no direct shear on the bolts upon contact. | The bumpers are designed so that the bolts are subjected to a compressive force upon contact. |
| | **AND** | | | |
| | E3. LIMIT SWITCH FAILURE | | ANSI/ASME 30.2, para. 2-1.8.2.a<br>A crane shall be provided with bumpers or other automatic means of stopping. | The Ederer 30-ton bridge crane has bumpers and a set of dual limit switches at the end of each trolley and bridge rails. |
| G5. BRIDGE/ TROLLEY OVERTRAVELS | G6. MOTION FAILS TO STOP WHEN COMMANDED | G2. BRIDGE/ TROLLEY RUNS OFF ENDRAILS | | SEE HAZARDOUS CONDITION G6 FOR FURTHER DEVELOPMENT. |

Table 19 (Page 5 of 5). **SYSTEM HAZARD ANALYSIS**

**Phase/Mode Function** SAA09FY091-007 | **Date** March 19, 1991

**Task/Operation or Facility** 30-Ton Brigde Crane OPF HB-3 | **Prepared by** Pierre Trudel

| HAZARDOUS CONDITION | HAZARD CAUSE | HAZARD EFFECT | SAFETY/ENGINEERING REQUIREMENTS | HAZARD ELIMINATION/CONTROL PROVISIONS |
|---|---|---|---|---|
| | OR | | | |
| | E4. OPERATOR ERROR | | | SEE HAZARD CAUSE E4 FOR FURTHER DEVELOPMENT. |
| G3. VERTICAL/ HORIZONTAL COLLISION OF LOAD | G6.MOTION FAILS TO STOP WHEN COMMANDED | G0. PERSONNEL INJURY, LOSS OF LIFE AND/OR DAMAGE TO FLIGHT HARDWARE | | SEE HAZARDOUS CONDITION G6 FOR FURTHER DEVELOPMENT. |
| | OR | | | |
| | E4. OPERATOR ERROR | | | SEE HAZARD CAUSE E4 FOR FURTHER DEVELOPMENT. |

## 8.0 LPS CONTROL/MONITOR FUNCTIONS REVIEW

### 8.1 APPLICATION SET CONTROL LOGIC REVIEW

**8.1.1 PREREQUISITE CONTROL LOGIC REVIEW.** There is no Prerequisite Control Logic associated with the critical functions assessed in section 4.0 for this system; therefore, no Prerequisite Control Logic Review is required.

**8.1.2 REACTIVE CONTROL LOGIC REVIEW.** There is no Reactive Control Logic associated with the critical functions assessed in section 4.0 for this system; therefore, no Reactive Control Logic Review is required.

### 8.2 LAUNCH COMMIT CRITERIA AND GROUND LAUNCH SEQUENCER REVIEW

There are no Launch Commit Criteria requirements for this system; therefore, no Launch Commit Criteria and Ground Launch Sequencer Review is required.

### 8.3 LPS/CCMS CONTROL FUNCTION ANALYSIS

The LPS/CCMS does not provide any control and monitor functions for the critical functions assessed in section 4.0 for this system; therefore, no LPS/CCMS Control Function Analysis is required.

## 9.0 END-TO-END ANALYSIS

This system interfaces with and requires the support of the systems depicted in Figure 15, End-to-End Block Diagram of the 30 Ton Bridge Crane. An assessment of the loss of each interfacing system follows.

Table 20. **Interfacing System Loss Assessment**

| Interfacing System Title | Effect of Loss | SAA Number | Concurrence in Other SAA Comments |
|---|---|---|---|
| 60 Hz Low Voltage Power at the OPF-3 | NC | 09EL23-002 | YES |
| OPF High Bay Three Structure | C | NA | NA |
| RF Communications System at the OPF-1,-2,-3 30 Ton Cranes | C | 09CU07-010 | YES |

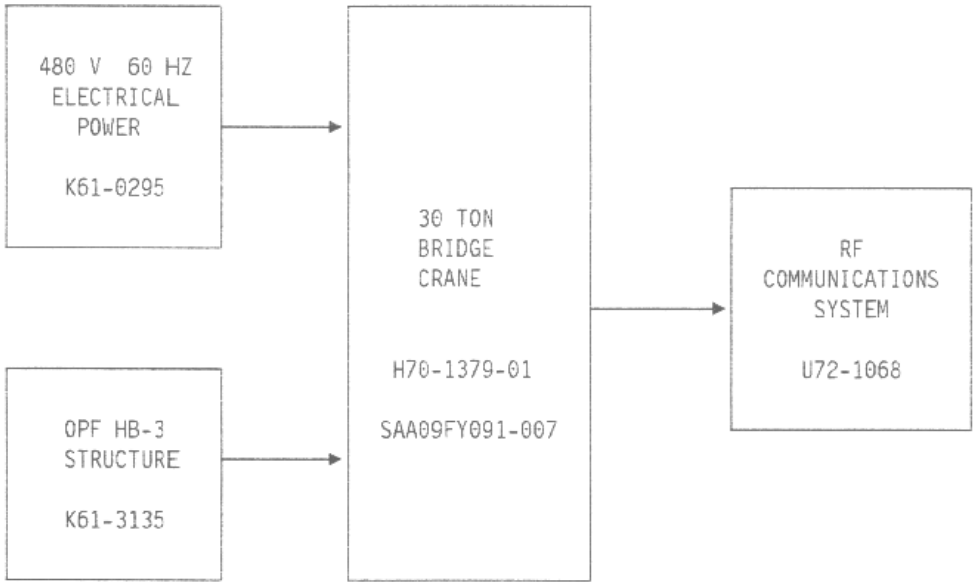


FIGURE 15. END-TO-END BLOCK DIAGRAM OF THE 30-TON BRIDGE CRANES

## 10.0 SNEAK CIRCUIT ANALYSIS

There was no Sneak Circuit Analysis performed on this system.

## 11.0 EMERGENCY SAFING ANALYSIS

There are no Emergency Safing Circuits associated with this system.

## 12.0 CRITICALITY CATEGORY 1R ANALYSIS

Improper performance of this system could result in loss of life or vehicle; therefore, the components in the critical functions are analyzed in the following reliability block diagram.

## 12.1 RELIABILITY BLOCK DIAGRAM

The components of this system are described in the following reliability block diagram. The reliability block diagram depicts the logical relationship of system components in series and parallel paths that lead to the desired event. Those items identified as criticality category 1R are summarized in section 12.2.

Module : 30TON
Description : 30 TON BRIDGE CRANES IN OPF HIGH BAY 3

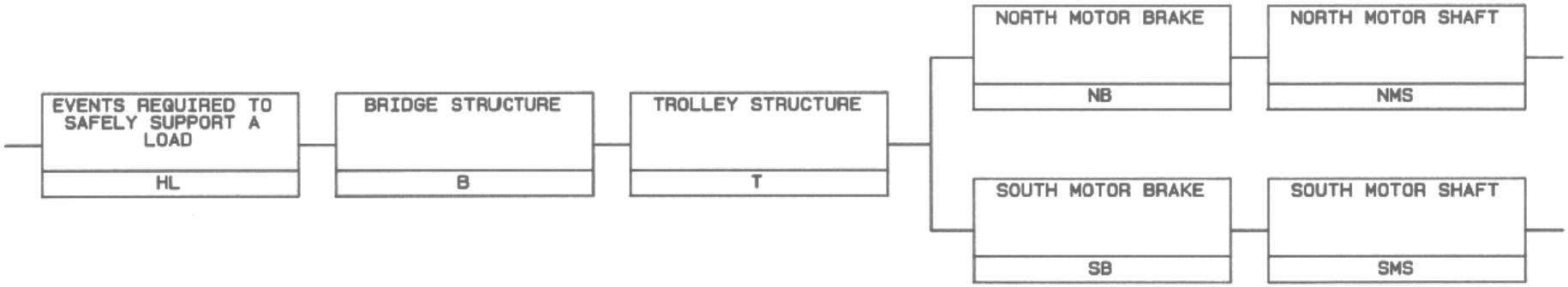




SAA09FY091-007

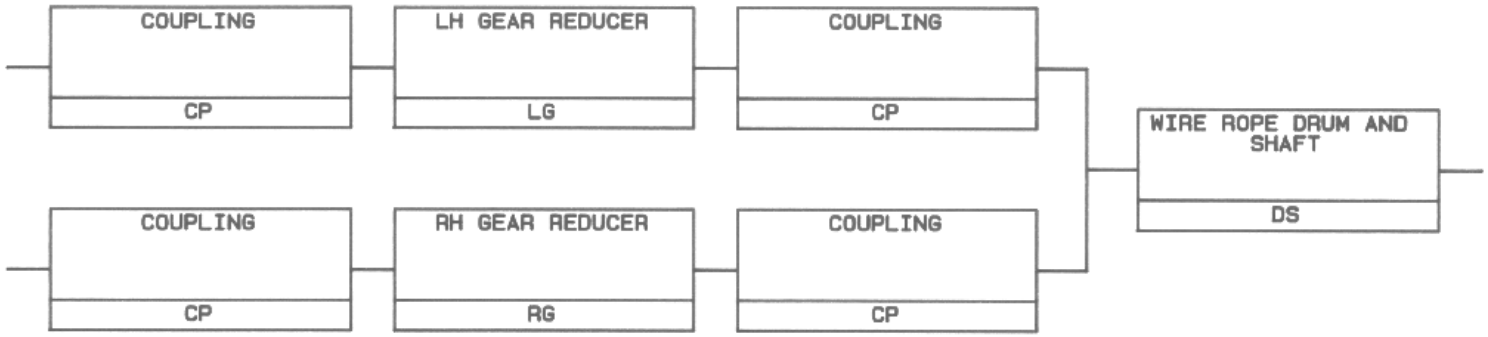




SAA09FY091-007

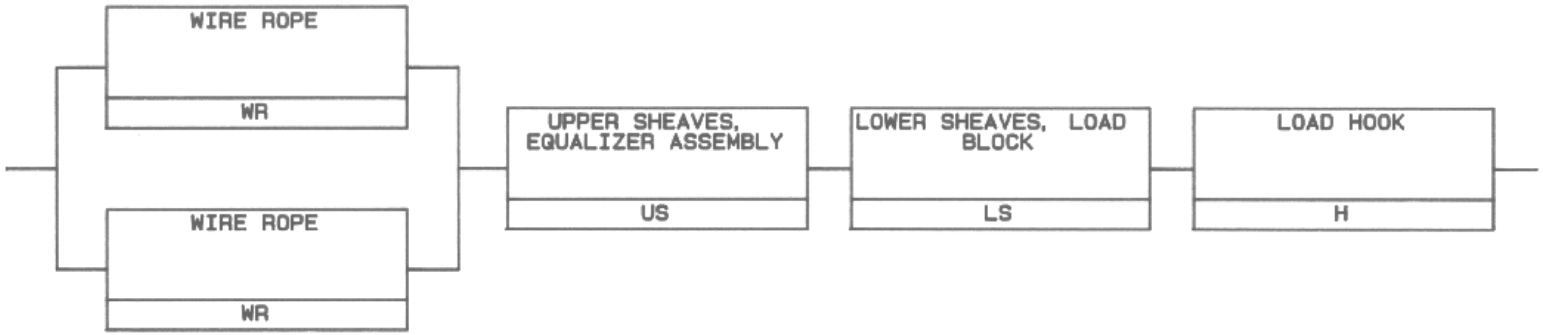
WIRE ROPE
WR
WIRE ROPE
WR
UPPER SHEAVES, EQUALIZER ASSEMBLY
US
LOWER SHEAVES, LOAD BLOCK
LS
LOAD HOOK
H

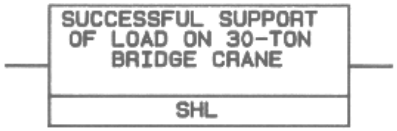
SUCCESSFUL SUPPORT
OF LOAD ON 30-TON
BRIDGE CRANE
SHL

## 12.2 CRITICALITY CATEGORY 1R ITEMS

There were 10 criticality category 1R items identified in section 12.1 for this system. The 1R items are summarized on the following Criticality Category 1R Items Summary Sheets (Worksheet 5122-014).

Table 21 (Page 1 of 2). **CRITICALITY CATEGORY 1R ITEMS SUMMARY**

System 30-TON BRIDGE CRANES
Baseline 380.00

Program SPACE SHUTTLE

Station Set/Facility Code GD
Date MARCH 1991

Prepared By P. CLUKEY, LSOC 51-22

| FIND NO. NASA PART NO. MFG NAME MFG PART NO. | PART NAME PROGRAM MODEL NO. DRAWING/SHEET NO. | a. FAILURE MODE b. CAUSE c. FMN | FAILURE EFFECT ON SYSTEM PERFORMANCE/VEHICLE SYSTEMS AND/OR PERSONNEL SAFETY | REDUNDANCY SCREENS PASS | REDUNDANCY SCREENS FAIL | CONFORMS TO JSCM 8080 | OMRS FILE VI VOLUME I TEST AND INSPECTION REQUIREMENT(S) | TEAR DOWN ANALYSIS REQUIRED |
|---|---|---|---|---|---|---|---|---|
| (9)<br>NONE<br>EDERER<br>C-22163 | BRAKE WHEEL<br>H70-1379-01<br>A-13725 | a. KEY DISENGAGES<br>b. STRUCTURAL FAILURE<br>c. 09FY091-007.001 | LOSS OF ABILITY FOR NORTH BRAKE WHEEL TO PROVIDE TORQUE TO HOLD LOAD. REQUIRES FAILURE IN SOUTH LOAD PATH CONSISTING OF COUPLINGS, RH REDUCER AND SOUTH BRAKE TO LOSE CONTROL OF LOAD. | A<br>C | B | NA | • WILL REQUIRE VERIFICATION OF ANNUAL LOAD TEST OF NORTH AND SOUTH BRAKES TO PROVIDE ASSURANCE THAT EACH BRAKE WILL INDEPENDANTLY HOLD THE RATED LOAD. | NO |
| NONE<br>NONE<br>GENERAL ELECTRIC<br>IC9528-C101 | NORTH BRAKE<br>H70-1379-01<br>A-13725 | a. FAILS TO ENGAGE<br>b. STUCK, WORN, OR GLAZED<br>c. 09FY091-007.002 | LOSS OF ABILITY FOR NORTH BRAKE TO PROVIDE TORQUE TO HOLD LOAD. REQUIRES FAILURE IN SOUTH LOAD PATH CONSISTING OF COUPLINGS, RH REDUCER, AND SOUTH BRAKE TO LOSE CONTROL OF LOAD. | A<br>C | B | NA | • WILL REQUIRE VERIFICATION OF ANNUAL LOAD TEST OF NORTH AND SOUTH BRAKES TO PROVIDE ASSURANCE THAT EACH BRAKE WILL INDEPENDANTLY HOLD THE RATED LOAD. | NO |
| (10)<br>NONE<br>ZURN<br>F-101 1/2 | COUPLING<br>H70-1379-01<br>A-13725 | a. KEY DISENGAGES<br>b. STRUCTURAL FAILURE<br>c. 09FY091-007.003 | LOSS OF ABILITY FOR NORTH MOTOR TO RAISE/LOWER LOAD AND FOR NORTH BRAKE TO HOLD LOAD. REQUIRES FAILURE IN SOUTH LOAD PATH CONSISTING OF COUPLINGS, RH REDUCER, SOUTH MOTOR AND SOUTH BRAKE TO LOSE CONTROL OF LOAD. | A<br>B<br>C | | NA | • WILL REQUIRE VERIFICATION OF ANNUAL LOAD TEST OF NORTH AND SOUTH LOAD PATHS TO PROVIDE ASSURANCE THAT EACH PATH WILL INDEPENDANTLY HOLD THE RATED LOAD. | NO |
| (1)<br>NONE<br>REDUREX<br>SDN 250 | LH REDUCER<br>H70-1379-01<br>A-13725 | a. GEAR DISENGAGES<br>b. STRUCTURAL FAILURE<br>c. 09FY091-007.004 | LOSS OF ABILITY FOR NORTH MOTOR TO RAISE/LOWER LOAD AND FOR NORTH BRAKE TO HOLD LOAD. REQUIRES FAILURE IN SOUTH LOAD PATH CONSISTING OF COUPLINGS, RH REDUCER, SOUTH MOTOR AND SOUTH BRAKE TO LOSE CONTROL OF LOAD. | A<br>B<br>C | | NA | • WILL REQUIRE VERIFICATION OF ANNUAL LOAD TEST OF NORTH AND SOUTH LOAD PATHS TO PROVIDE ASSURANCE THAT EACH PATH WILL INDEPENDANTLY HOLD THE RATED LOAD. | NO |
| (3)<br>NONE<br>EDERER<br>C-22090 | COUPLING<br>H70-1379-01<br>A-13725 | a. KEY DISENGAGES<br>b. STRUCTURAL FAILURE<br>c. 09FY091-007.005 | LOSS OF ABILITY FOR NORTH MOTOR TO RAISE/LOWER LOAD AND FOR NORTH BRAKE TO HOLD LOAD. REQUIRES FAILURE IN SOUTH LOAD PATH CONSISTING OF COUPLINGS, RH REDUCER, SOUTH MOTOR AND SOUTH BRAKE TO LOSE CONTROL OF LOAD. | A<br>B<br>C | | NA | • WILL REQUIRE VERIFICATION OF ANNUAL LOAD TEST OF NORTH AND SOUTH LOAD PATHS TO PROVIDE ASSURANCE THAT EACH PATH WILL INDEPENDANTLY HOLD THE RATED LOAD. | NO |
| (3)<br>NONE<br>EDERER<br>C-22090 | COUPLING<br>H70-1379-01<br>A-13725 | a. KEY DISENGAGES<br>b. STRUCTURAL FAILURE<br>c. 09FY091-007.006 | LOSS OF ABILITY FOR SOUTH MOTOR TO RAISE/LOWER LOAD AND FOR SOUTH BRAKE TO HOLD LOAD. REQUIRES FAILURE IN NORTH LOAD PATH CONSISTING OF COUPLINGS, LH REDUCER, NORTH MOTOR AND NORTH BRAKE TO LOSE CONTROL OF LOAD. | A<br>B<br>C | | NA | • WILL REQUIRE VERIFICATION OF ANNUAL LOAD TEST OF NORTH AND SOUTH LOAD PATHS TO PROVIDE ASSURANCE THAT EACH PATH WILL INDEPENDANTLY HOLD THE RATED LOAD. | NO |

Table 21 (Page 2 of 2). **CRITICALITY CATEGORY 1R ITEMS SUMMARY**

**System** 30-TON BRIDGE CRANES
**Baseline** 380.00

**Program** SPACE SHUTTLE

**Station Set/Facility Code** GD
**Date** MARCH 1991
**Prepared By** P. CLUKEY, LSOC 51-22

| FIND NO. NASA PART NO. MFG NAME MFG PART NO. | PART NAME PROGRAM MODEL NO. DRAWING/SHEET NO. | a. FAILURE MODE b. CAUSE c. FMN | FAILURE EFFECT ON SYSTEM PERFORMANCE/VEHICLE SYSTEMS AND/OR PERSONNEL SAFETY | REDUNDANCY SCREENS PASS | REDUNDANCY SCREENS FAIL | CONFORMS TO JSCM 8080 | OMRS FILE VI VOLUME I TEST AND INSPECTION REQUIREMENT(S) | TEAR DOWN ANALYSIS REQUIRED |
|---|---|---|---|---|---|---|---|---|
| (2)<br>NONE<br>REDUREX<br>SDN 250 | RH REDUCER<br>H70-1379-01<br>A-13725 | a. GEAR DISENGAGES<br>b. STRUCTURAL FAILURE<br>c. 09FY091-007.007 | LOSS OF ABILITY FOR SOUTH MOTOR TO RAISE/LOWER LOAD AND FOR SOUTH BRAKE TO HOLD LOAD. REQUIRES FAILURE IN NORTH LOAD PATH CONSISTING OF COUPLINGS, LH REDUCER, NORTH MOTOR AND BRAKE TO LOSE CONTROL OF LOAD. | A<br>B<br>C | | NA | • WILL REQUIRE VERIFICATION OF ANNUAL LOAD TEST OF NORTH AND SOUTH LOAD PATHS TO PROVIDE ASSURANCE THAT EACH PATH WILL INDEPENDANTLY HOLD THE RATED LOAD. | NO |
| (10)<br>NONE<br>ZURN<br>F-101 1/2 | COUPLING<br>H70-1379-01<br>A-13725 | a. KEY DISENGAGES<br>b. STRUCTURAL FAILURE<br>c. 09FY091-007.008 | LOSS OF ABILITY FOR SOUTH MOTOR TO RAISE/LOWER LOAD AND FOR SOUTH BRAKE TO HOLD LOAD. REQUIRES FAILURE IN NORTH LOAD PATH CONSISTING OF COUPLINGS, LH REDUCER, NORTH MOTOR AND NORTH BRAKE TO LOSE CONTROL OF LOAD. | A<br>B<br>C | | NA | • WILL REQUIRE VERIFICATION OF ANNUAL LOAD TEST OF NORTH AND SOUTH LOAD PATHS TO PROVIDE ASSURANCE THAT EACH PATH WILL INDEPENDANTLY HOLD THE RATED LOAD. | NO |
| NONE<br>NONE<br>GENERAL ELECTRIC<br>IC9528-C101 | SOUTH BRAKE<br>H70-1379-01<br>A-13725 | a. FAILS TO ENGAGE<br>b. STUCK, WORN, OR GLAZED<br>c. 09FY091-007.009 | LOSS OF ABILITY FOR SOUTH BRAKE TO PROVIDE TORQUE TO HOLD LOAD. REQUIRES FAILURE IN NORTH LOAD PATH CONSISTING OF COUPLINGS, LH REDUCER AND NORTH BRAKE TO LOSE CONTROL OF LOAD. | A<br>C | B | NA | • WILL REQUIRE VERIFICATION OF ANNUAL LOAD TEST OF NORTH AND SOUTH BRAKES TO PROVIDE ASSURANCE THAT EACH BRAKE WILL INDEPENDANTLY HOLD THE RATED LOAD. | NO |
| (9)<br>NONE<br>EDERER<br>C-22163 | BRAKE WHEEL<br>H70-1379-01<br>A-13725 | a. KEY DISENGAGES<br>b. STRUCTURAL FAILURE<br>c. 09FY091-007.010 | LOSS OF ABILITY FOR SOUTH BRAKE WHEEL TO PROVIDE TORQUE TO HOLD LOAD. REQUIRES FAILURE IN NORTH LOAD PATH CONSISTING OF COUPLINGS, LH REDUCER AND NORTH BRAKE TO LOSE CONTROL OF LOAD. | A<br>C | B | NA | • WILL REQUIRE VERIFICATION OF ANNUAL LOAD TEST OF NORTH AND SOUTH BRAKES TO PROVIDE ASSURANCE THAT EACH BRAKE WILL INDEPENDANTLY HOLD THE RATED LOAD. | NO |

## 13.0 AREAS OF CONCERN

The following Areas of Concern were identified during this analysis:

a. The final upper limit switch configuration does not conform to NSS/GO-1740.9 requirements with regard to E-Stop electrical contacts being normally closed.

b. There are numerous single failure points (Bridge/Trolley/Hoist speed selector switch, Bridge/Trolley full speed relay contact) that will result in the bridge/trolley operating in a higher speed range than selected. This is a non-conformance of NSS/GO-1740.9 requirements.

c. There are two single failure points (Hoist Float Potentiometer hoist and lower contacts) that will result in the hoist operating in a direction other than commanded. This is a non-conformance of NSS/GO-1740.9 requirements.

d. The main power elementary drawing shows the radio system power supplied through a single circuit breaker creating a critical single failure point. Each of the two radios will be supplied by a seperate circuit breaker in the actual installation, eliminating the critical single failure point.

# Appendix A.
# ABBREVIATIONS

| | |
|---|---|
| **ACB** | ACCESSORIES CIRCUIT BREAKER |
| **ACBP** | ACCESSORIES CIRCUIT BREAKER PANEL |
| **AT** | ACCESSORIES TRANSFORMER |
| **BBR** | BRIDGE BRAKE RELAY |
| **BC** | BRIDGE DC LOOP CONTACTOR |
| **BCB** | BRIDGE CIRCUIT BREAKER |
| **BCMD** | BRIDGE COMMAND RELAY |
| **BCMD1** | BRIDGE COMMAND AUXILIARY RELAY |
| **BCT** | BRIDGE CONTROL TRANSFORMER |
| **BD** | BRIDGE DRIFT RELAY |
| **BDE** | BRIDGE DRIVE ENABLE RELAY |
| **BEAM** | EAST BRIDGE AMMETER |
| **BEMTS** | EAST BRIDGE MOTOR THERMISTOR SHUTDOWN MODULE |
| **BEMTW** | EAST BRIDGE MOTOR THERMISTOR WARNING MODULE |
| **BEOH** | EAST BRIDGE OVERHEAT RELAY |
| **BEOL** | EAST BRIDGE OVERLOAD RELAY |
| **BEOS** | BRIDGE ELECTRONIC OVERSPEED RELAY |
| **BFS** | BRIDGE FULL SPEED RELAY |
| **BFSA** | BRIDGE FAULT SENSE ASSEMBLY |
| **BIT** | BRIDGE DRIVE ISOLATION TRANSFORMER |
| **BL** | BRIDGE LIMITS RELAY |
| **BMC** | BRIDGE MOTOR CONTROLLER |
| **BN** | BRIDGE NORTH TRAVEL RELAY |
| **BN1** | BRIDGE NORTH TRAVEL AUXILIARY RELAY |
| **BNS** | BRIDGE NORMAL SPEED RELAY |
| **BOSR** | BRIDGE OVERSPEED RELAY |
| **BP** | BRIDGE PERMISSIVE RELAY |
| **BPS** | BRIDGE POWER SUPPLY |
| **BPT** | BRIDGE POWER-UP TIMING RELAY |
| **BR** | BRIDGE RUN RELAY |
| **BRDY** | BRIDGE READY RELAY |
| **BRECT** | BRIDGE RECTIFIER |
| **BS** | BRIDGE SOUTH TRAVEL RELAY |
| **BS1** | BRIDGE SOUTH TRAVEL AUXILIARY RELAY |
| **BS2** | BRIDGE SHUNT #2 |
| **BSPA** | BRIDGE SCALING RESISTOR ASSEMBLY |
| **BSS** | BRIDGE SHUNT #1 |
| **BTIM** | BRIDGE TRAVEL INTERFACE MODULE |
| **BWAM** | WEST BRIDGE AMMETER |
| **BWMTS** | WEST BRIDGE MOTOR THERMISTOR SHUTDOWN MODULE |
| **BWMTW** | WEST BRIDGE MOTOR THERMISTOR WARNING MODULE |
| **BWOH** | WEST BRIDGE OVERHEAT RELAY |
| **BWOL** | WEST BRIDGE OVERLOAD RELAY |
| **BZS** | BRIDGE ZERO SPEED RELAY |
| **CT** | CONTROL TRANSFORMER |
| **EMI** | ELECTRO-MAGNETIC INTERFERENCE |
| **FH** | FLOAT MODE HOIST RELAY |

| | |
|---|---|
| **FL** | FLOAT MODE LOWER RELAY |
| **FM** | FLOAT MODE RELAY |
| **FU** | FUSE |
| **H** | HOIST RELAY |
| **HBC** | HOIST BRAKE CONTACTOR |
| **HBF** | HOIST BRAKE FORCING RELAY |
| **HBT** | HOIST BRAKE TRANSFORMER |
| **HCMD** | HOIST COMMAND RELAY |
| **HCT** | HOIST CONTROL TRANSFORMER |
| **HDE** | HOIST DRIVE ENABLE RELAY |
| **HEOS** | HOIST ELECTRONIC OVERSPEED RELAY |
| **HIM** | HOIST INTERFACE MODULE |
| **HL** | HOIST LIMIT RELAY |
| **HNAM** | NORTH HOIST AMMETER |
| **HNBOL** | NORTH HOIST BLOWER OVERLOAD |
| **HNBS** | NORTH HOIST BLOWER STARTER |
| **HNC** | NORTH HOIST CONTACTOR |
| **HNCB** | NORTH HOIST CIRCUIT BREAKER |
| **HNDR** | NORTH HOIST DRIVE REQUESTED RELAY |
| **HNFSA** | NORTH HOIST FAULT SENSE ASSEMBLY |
| **HNIT** | NORTH HOIST ISOLATION TRANSFORMER |
| **HNMCM** | NORTH HOIST MOTOR CONTROLLER MODULE |
| **HNMTS** | NORTH HOIST MOTOR THERMISTOR SHUTDOWN MODULE |
| **HNMTW** | NORTH HOIST MOTOR THERMISTOR WARNING MODULE |
| **HNR** | NORTH HOIST READY RELAY |
| **HNRDY** | NORTH HOIST READY RELAY |
| **HNRECT** | HOIST RECTIFIER |
| **HNSRA** | NORTH HOIST SCALING RESISTOR ASSEMBLY |
| **HOM** | HOIST OVERSPEED MODULE |
| **HOSR** | HOIST OVERSPEED RELAY |
| **HPS** | HOIST POWER SUPPLY |
| **HPT** | HOIST POWER-UP TIMING RELAY |
| **HSAM** | SOUTH HOIST AMMETER |
| **HSBOL** | SOUTH HOIST BLOWER OVERLOAD |
| **HSBS** | SOUTH HOIST BLOWER STARTER |
| **HSC** | SOUTH HOIST CONTACTOR |
| **HSCB** | SOUTH HOIST CIRCUIT BREAKER |
| **HSDR** | SOUTH HOIST DRIVE REQUESTED RELAY |
| **HSFSA** | SOUTH HOIST FAULT SENSE ASSEMBLY |
| **HSIT** | SOUTH HOIST ISOLATION TRANSFORMER |
| **HSMCM** | SOUTH HOIST MOTOR CONTROLLER MODULE |
| **HSMTS** | SOUTH HOIST MOTOR THERMISTOR SHUTDOWN MODULE |
| **HSMTW** | SOUTH HOIST MOTOR THERMISTOR WARNING MODULE |
| **HSR** | SOUTH HOIST READY RELAY |
| **HSRDY** | SOUTH HOIST READY RELAY |
| **HSSRA** | SOUTH HOIST SCALING RESISTOR ASSEMBLY |
| **ILT1** | INDICATOR LIGHT TEST RELAY #1 |
| **ILT2** | INDICATOR LIGHT TEST RELAY #2 |
| **L** | LOWER RELAY |
| **M** | MAIN CONTACTOR |
| **M1** | MAIN START RELAY |

| | |
|---|---|
| **MCB** | MAIN CIRCUIT BREAKER |
| **PIC** | PROGRAMMABLE INDUSTRIAL COMPUTER |
| **SELR** | SELSYN SELECT RELAY |
| **SM** | SCAN MONITOR RELAY |
| **SMPS** | SCAN MONITOR POWER SUPPLY |
| **SMPT** | SCAN MONITOR POWER-UP TIMING RELAY |
| **ST** | SHUNT TRIP |
| **SW** | SWITCH |
| **TAM** | TROLLEY AMMETER |
| **TB** | TERMINAL BLOCK |
| **TBR** | TROLLEY BRAKE RELAY |
| **TBT** | TRAVEL BRAKE TRANSFORMER |
| **TC** | TROLLEY DC LOOP CONTACTOR |
| **TCB** | TROLLEY CIRCUIT BREAKER |
| **TCMD** | TROLLEY COMMAND RELAY |
| **TCMD1** | TROLLEY COMMAND AUXILIARY RELAY |
| **TCT** | TROLLEY CONTROL TRANSFORMER |
| **TD** | TROLLEY DRIFT RELAY |
| **TDE** | TROLLEY DRIVE ENABLE RELAY |
| **TDIT** | TROLLEY DRIVE ISOLATION TRANSFORMER |
| **TE** | TROLLEY EAST TRAVEL RELAY |
| **TE1** | TROLLEY EAST TRAVEL AUXILIARY RELAY |
| **TEOS** | TROLLEY ELECTRONIC OVERSPEED RELAY |
| **TFS** | TROLLEY FULL SPEED RELAY |
| **TFSA** | TROLLEY FAULT SENSE ASSEMBLY |
| **TL** | TROLLEY LIMITS RELAY |
| **TMC** | TROLLEY MOTOR CONTROLLER |
| **TMTS** | TROLLEY MOTOR THERMISTOR SHUTDOWN MODULE |
| **TMTW** | TROLLEY MOTOR THERMISTOR WARNING MODULE |
| **TNS** | TROLLEY NORMAL SPEED RELAY |
| **TOH** | TROLLEY OVERHEAT RELAY |
| **TOL** | TROLLEY OVERLOAD RELAY |
| **TOSR** | TROLLEY OVERSPEED RELAY |
| **TP** | TROLLEY PERMISSIVE RELAY |
| **TPS** | TROLLEY POWER SUPPLY |
| **TPT** | TROLLEY POWER-UP TIMING RELAY |
| **TR** | TROLLEY RUN RELAY |
| **TRDY** | TROLLEY READY RELAY |
| **TRECT** | TROLLEY RECTIFIER |
| **TS1** | TROLLEY SHUNT |
| **TSRA** | TROLLEY SCALING RESISTOR ASSEMBLY |
| **TTIM** | TROLLEY TRAVEL INTERFACE MODULE |
| **TW** | TROLLEY WEST TRAVEL RELAY |
| **TW1** | TROLLEY WEST TRAVEL AUXILIARY RELAY |
| **TZS** | TROLLEY ZERO SPEED RELAY |
| **UV** | UNDERVOLTAGE |